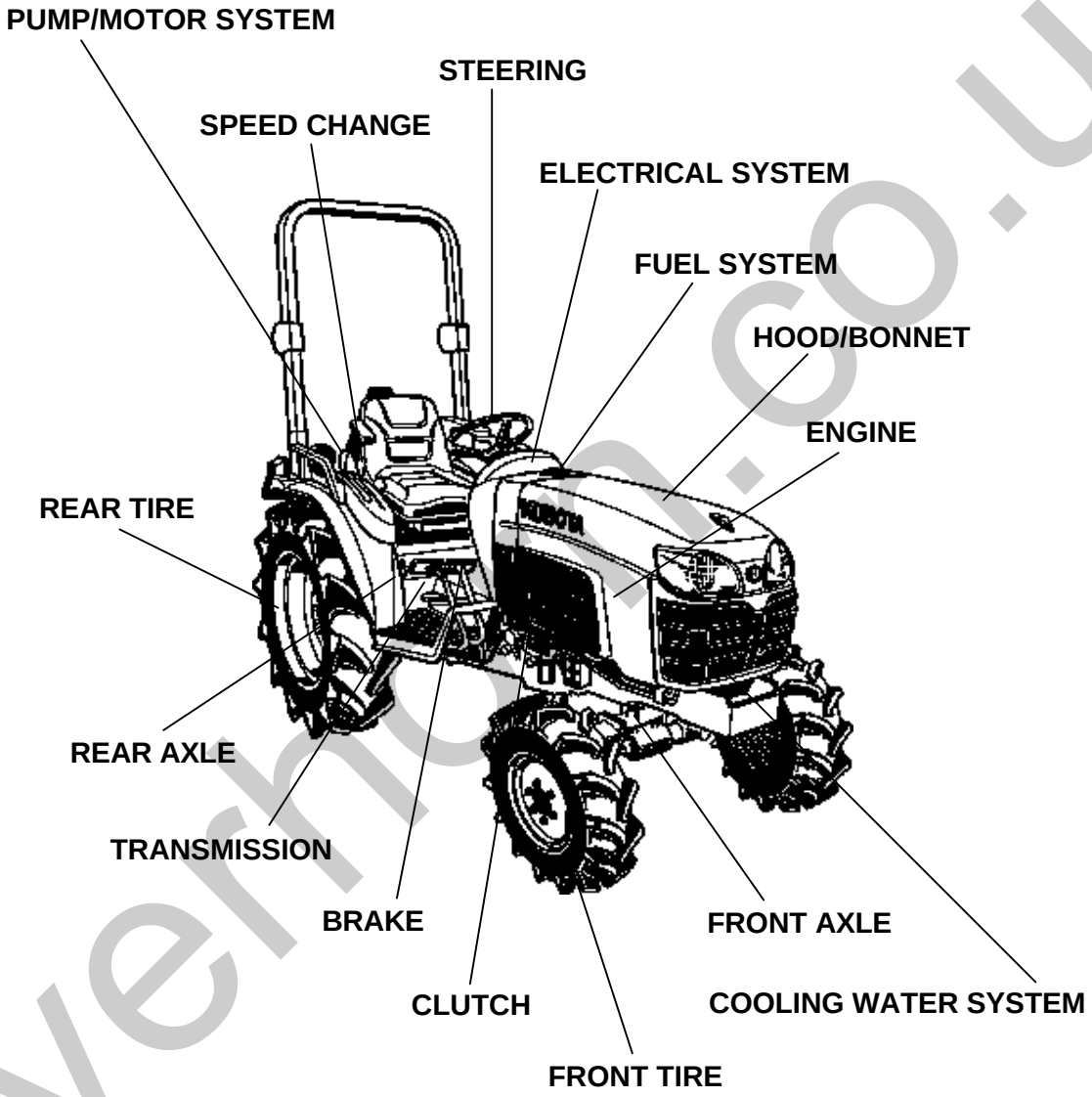

TOP LINK/TOP LINK BRACKET/PTO PROTECTOR LABELS

ACCESSORIES AND SERVICE PARTS OPTION

silverhorn.co.uk

Item	Part No.	Description	Book
ENGINE	011001	CRANKCASE	100K0828
	011002	OIL PAN	100K0828
	011003	CYLINDER HEAD	100K0828
	011004	GEAR CASE	100K0828
	011005	HEAD COVER	100K0828
	011006	OIL FILTER	100K0828
	011007	DIPSTICK AND GUIDE	100K0828
	011100	MAIN BEARING CASE	100K0828
	011101	CAMSHAFT AND IDLE GEAR SHAFT	100K0828
	011102	PISTON AND CRANKSHAFT	100K0828
	011103	FLYWHEEL	100K0828
	011105	FUEL CAMSHAFT AND GOVERNOR SHAFT	100K0828
	011200	IDLE APPARATUS	100K0828
	011202	INJECTION PUMP	100K0828
	011204	GOVERNOR	100K0828
	011205	SPEED CONTROL PLATE	100K0828
	011206	NOZZLE HOLDER AND GLOW PLUG	100K0828
	011207	NOZZLE HOLDER [COMPONENT PARTS]	100K0828
	011301	FUEL PUMP(MECHANICAL)	100K0828
	011400	DYNAMO	100K0828
	011401	DYNAMO [COMPONENT PARTS]	100K0828
	011500	WATER FLANGE AND THERMOSTAT	100K0828
	011501	WATER PUMP	100K0828
	011600	VALVE AND ROCKER ARM	100K0828
	011601	INLET MANIFOLD	100K0828
	011602	EXHAUST MANIFOLD	100K0828
	011603	AIR CLEANER	100K0828
	011605	MUFFLER	100K0828
	011700	HYDRAULIC PUMP	100K0828
	011701	HYDRAULIC PUMP [COMPONENT PARTS]	100K0828
	011900	UPPER GASKET KIT	100K0828
	011901	LOWER GASKET KIT	100K0828
	01A001	ACCELERATOR LEVER	100K0828
	01A030	ACCELERAOTR ROD	100K0828
FUEL SYSTEM	01A101	FUEL TANK	100K0828
	01A11002	FUEL PIPE	100K0828
	01A130	FUEL FILTER [COMPONENT PARTS]	100K0828
COOLING WATER SYSTEM	01A40102	FAN	100K0828
	01A41002	WATER PIPE	100K0828
	01A42002	RADIATOR	100K0828
	01A430	RESERVE TANK	100K0828
ELECTRICAL SYSTEM	01A510	STOP SOLENOID	100K0828
	01A525	STARTER	100K0828
	01A530	STARTER [COMPONENT PARTS]	100K0828
	01A535	BATTERY	100K0828
	01B101	SWITCH	100K0828
	01B115	PANEL BOARD	100K0828
	01B120	PANEL BOARD [COMPONENT PARTS]	100K0828
	01B301	HEAD LIGHT	100K0828
	01B302	HAZARD LIGHT	100K0828
	01B304	TAIL LIGHT	100K0828
	01B310	WINKER LAMP	100K0828
	01B50102	ELECTRICAL WIRING	100K0828

silverhorse.uk

Item	Part No.	Description	Book
CLUTCH	01C401	CLUTCH HOUSING	100K0828
	01C415	CENTER FRAME	100K0828
	01C417	SUB FRAME	100K0828
TRANSMISSION	01C420	TRANSMISSION CASE	100K0828
	01C425	DIFFERENTIAL GEAR CASE	100K0828
	01C428	REAR AXLE CASE LH	100K0828
	01C429	REAR AXLE CASE RH	100K0828
	01D001	CLUTCH SHAFT	100K0828
	01D005	PROPELLER SHAFT	100K0828
	01D010	HST	100K0828
	01D016	HST [COMPONENT PARTS] 1	100K0828
	01D017	HST [COMPONENT PARTS] 2	100K0828
	01D018	HST [COMPONENT PARTS] 3	100K0828
	01D019	HST [COMPONENT PARTS] 4	100K0828
	01D108	RANGE GEAR SHAFT	100K0828
	01D110	REVERSE SHAFT	100K0828
	01D13202	PTO DRIVE SHAFT	100K0828
	01D133	PTO CLUTCH SHAFT	100K0828
	01D136	PTO CLUTCH	100K0828
	01D137	MID PTO	100K0828
	01D139	BEVEL GEAR SHAFT/RANGE GEAR	100K0828
	01D140	REAR DIFFERENTIAL	100K0828
SPEED CHANGE	01D217	RANGE GEAR SHIFT FORK	100K0828
	01D222	PTO GEAR SHIFT ARM	100K0828
	01D225	DIFFERENTIAL LOCK SHIFT FORK	100K0828
REAR AXLE	01D301	REAR AXLE	100K0828
BRAKE	01E001	BRAKE	100K0828
	01E005	BRAKE ROD	100K0828
	01E015	PARKING BRAKE LEVER	100K0828
SPEED CHANGE	01F104	CRUISE CONTROL LEVER	100K0828
	01F105	CRUISE CONTROL BASE	100K0828
	01F106	CRUISE CONTROL CLUTCH	100K0828
	01F108	SPEED CONTROL PEDAL	100K0828
	01F109	HST RELEASE ROD	100K0828
	01F110	RANGE GEAR SHIFT LEVER	100K0828
	01F113	FRONT WHEEL DRIVE LEVER	100K0828
	01F125	PTO GEAR SHIFT LEVER	100K0828
PUMP/MOTOR SYSTEM	01F140	POSITON CONTROL LEVER	100K0828
BRAKE	01F201	BRAKE PEDAL	100K0828
REAR AXLE	01F205	DIFFERENTIAL LOCK PEDAL	100K0828
FRONT AXLE	01G101	FRONT AXLE FRAME	100K0828
	01G105	FRONT AXLE CASE	100K0828
	01G115	FRONT DIFFERENTIAL	100K0828
	01G120	DIFFERENTIAL GEAR SHAFT	100K0828
	01G123	BEVEL GEAR CASE	100K0828
	01G125	FRONT AXLE CASE	100K0828
	01G130	FRONT AXLE	100K0828
	01G135	FRONT DRIVE SHAFT	100K0828
STEERING	01H101	STEERING HANDLE	100K0828
	01H105	STEERING POST	100K0828
	01H108	TILT PEDAL	100K0828
	01H110	STEERING CONTROLLER	100K0828
	01H120	STEERING LINKAGE	100K0828
	01H122	STEERING CYLINDER [COMPONENT PARTS]	100K0828
PUMP/MOTOR SYSTEM	01J20102	HYDRAULIC OIL LINE(SUCTION)	100K0828
	01J21002	HYDRAULIC OIL LINE(DELIVERY)	100K0828
	01J21502	HYDRAULIC OIL LINE(STEERING)	100K0828
	01J235	HYDRAULIC OIL LINE (HST)	100K0828

silverhorse.uk

Item	Part No.	Description	Book
PUMP/MOTOR SYSTEM	01J240	HYDRAULIC OIL LINE (OIL COOLER)	100K0828
	01J301	HYDRAULIC CYLINDER	100K0828
	01J310	HYDRAULIC PISTON/LIFT ARM	100K0828
	01J330	FEED BACK LEVER	100K0828
	01J405	CONTROL VALVE	100K0828
	01J410	CONTROL VALVE [COMPONENT PARTS]	100K0828
	01J430	RELIEF VALVE	100K0828
	01J470	PTO VALVE	100K0828
	01J472	PTO VALVE [COMPONENT PARTS]	100K0828
	01K101	3-POINT LINKAGE 2(LIFT ROD)	100K0828
TOP LINK/TOP LINK BRACKET/PTO PROTECTOR	01K115	LOWER LINK	100K0828
	01K119	STABILIZER	100K0828
	01K120	3-POINT LINKAGE 1(TOP LINK)	100K0828
	01L117	HITCH/DRAWBAR	100K0828
	01L125	PTO PROTECTOR	100K0828
HOOD/BONNET	01M101	FRONT GRILLE	100K0828
	01M105	BONNET	100K0828
	01M113	PANEL COVER	100K0828
	01M120	SIDE COVER	100K0828
	01M130	SHUTTER PLATE	100K0828
	01M208	LEVER GUIDE LH	100K0828
	01M209	LEVER GUIDE RH	100K0828
	01M210	FENDER	100K0828
	01M21502	FLOOR SEAT	100K0828
	01M21702	SEAT SUPPORT	100K0828
	01M219	SEAT SUSPENSION	100K0828
	01M225	STEP	100K0828
	01M30101	ROPS(RIGID TYPE)	100K0828
	01M30102	ROPS(FOLDABLE TYPE)	100K0828
	01M501	SMV EMBLEM	100K0828
FRONT TIRE	01R10101	FRONT WHEEL(7-12)	100K0828
	01R10102	FRONT WHEEL(23*8.50-14R4)	100K0828
	01R10103	FRONT WHEEL(24*8.50-14)	100K0828
REAR TIRE	01R11001	REAR WHEEL(12.4-16)	100K0828
	01R11002	REAR WHEEL(12.4-16R4)	100K0828
	01R11003	REAR WHEEL(13.6-16)	100K0828
LABELS	01S10103	LABEL [ENGLISH]	100K0828
	01S10104	LABEL [FRENCH]	100K0828
ACCESSORIES AND SERVICE PARTS	01T105	ACCESSORIES AND SERVICE PARTS	100K0828
OPTION	01U800	ALTERNATOR KIT [OPTION]	100K0828
	01U802	ALTERNATOR [COMPONENT PARTS] [OPTION]	100K0828
	01U805	WORKING LIGHT KIT [OPTION]	100K0828
	01U94001	AUXILIARY CONTROL VALVE [OPTION]	100K0828
	01U94002	AUXILIARY CONTROL VALVE (FLOATING) [OPTION]	100K0828
	01U94301	AUXILIARY CONTROL VALVE LEVER (1ST) [OPTION]	100K0828
	01U94302	AUXILIARY CONTROL VALVE LEVER (2ND) [OPTION]	100K0828
	01U94501	AUXILIARY CONTROL VALVE COUPLER (1ST) [OPTION]	100K0828
	01U94502	AUXILIARY CONTROL VALVE COUPLER (2ND) [OPTION]	100K0828

silverhorse.co.uk

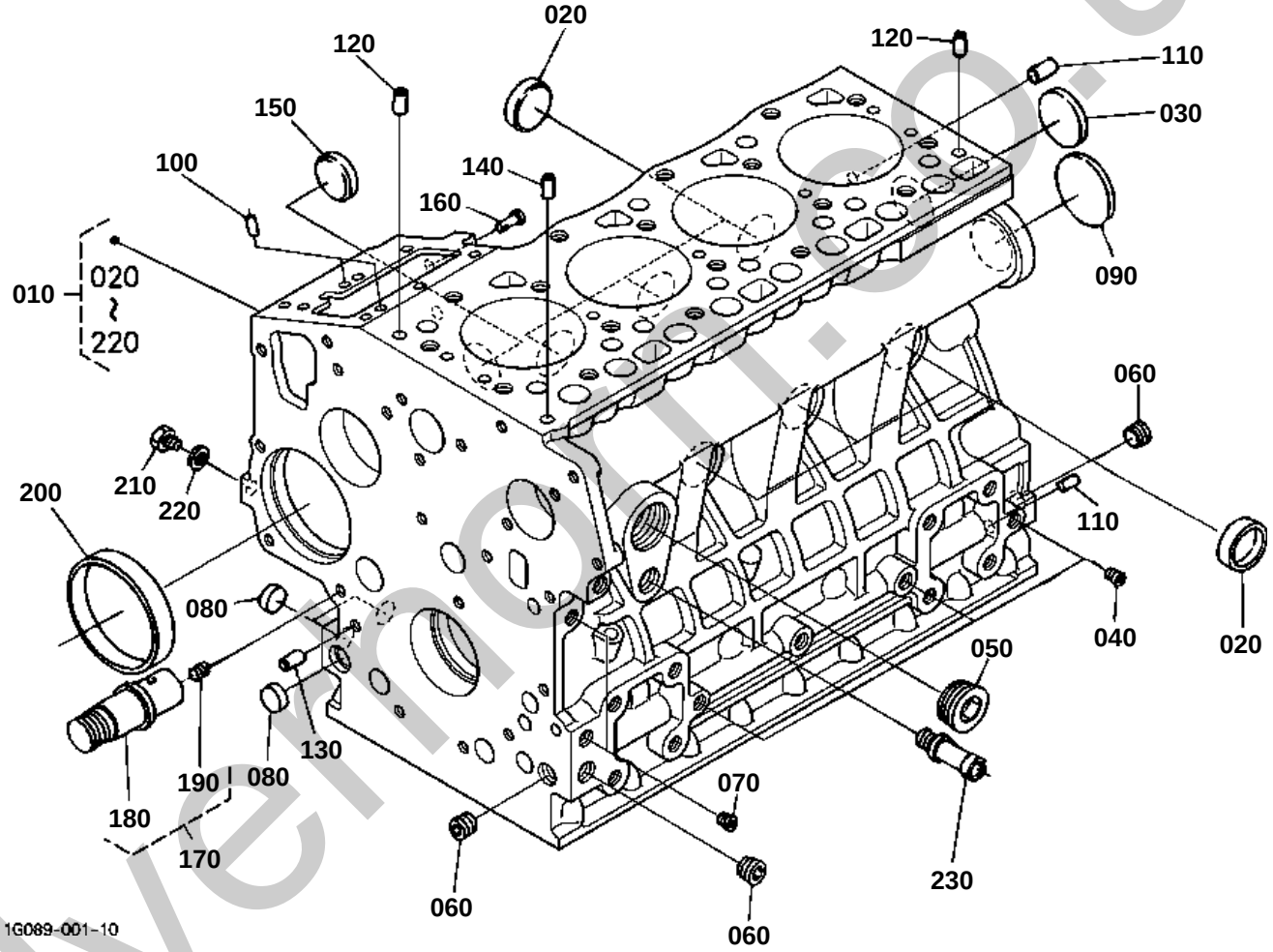

silvermoll.co.uk

CRANKCASE

↔ Interchangeable; ≠ not interchangeable; ← new for old; → old for new

REF.No	Part No.	Description	Q'ty	S.No.	I/C	REMARKS	Weight (kgf)	Weight (lb)
010	1G093-01010	COMP.CRANKCASE	1				47	103.4
020	15451-96270	CAP SEALING	6				0.001	0.0022
030	15221-03490	CAP SEALING	1				0.02	0.044
040	15261-96010	PLUG	4				0.002	0.0044
050	16683-96020	PLUG	1				0.07	0.154
060	16241-96010	PLUG	3				0.007	0.0154
070	15521-96020	PLUG	2				0.003	0.0066
080	17391-96160	PLUG EXPANSION	3				0.003	0.0066
090	16271-96160	PLUG EXPANSION	1				0.025	0.055
100	05012-00508	PIN STRAIGHT	2				0.001	0.0022
110	05012-00814	PIN STRAIGHT	2				0.006	0.0132
120	16221-94520	PIN STRAIGHT	2				0.005	0.011
130	15231-33960	PIN PIPE	2				0.001	0.0022
140	16241-33650	PIN PIPE	1				0.002	0.0044
150	16241-96262	PLUG FUEL CAMSHAFT	1				0.007	0.0154
160	16221-56280	PIN START SPRING	1				0.005	0.011
170	16251-24060	COMP SHAFT IDLE	1				0.18	0.396
180	16251-24260	SHAFT IDLE GEAR	1				0.18	0.396
190	15521-93610	SCREW SET	1				0.002	0.0044
200	16271-55350	BUSH GOVERNOR GEAR	1				0.06	0.132
210	15221-33610	PLUG	1				0.009	0.0198
220	15021-33660	GASKET	1				0.001	0.0022
230	15321-73340	PIPE WATER RETURN	1				0.016	0.0352

silverhorn.co.uk

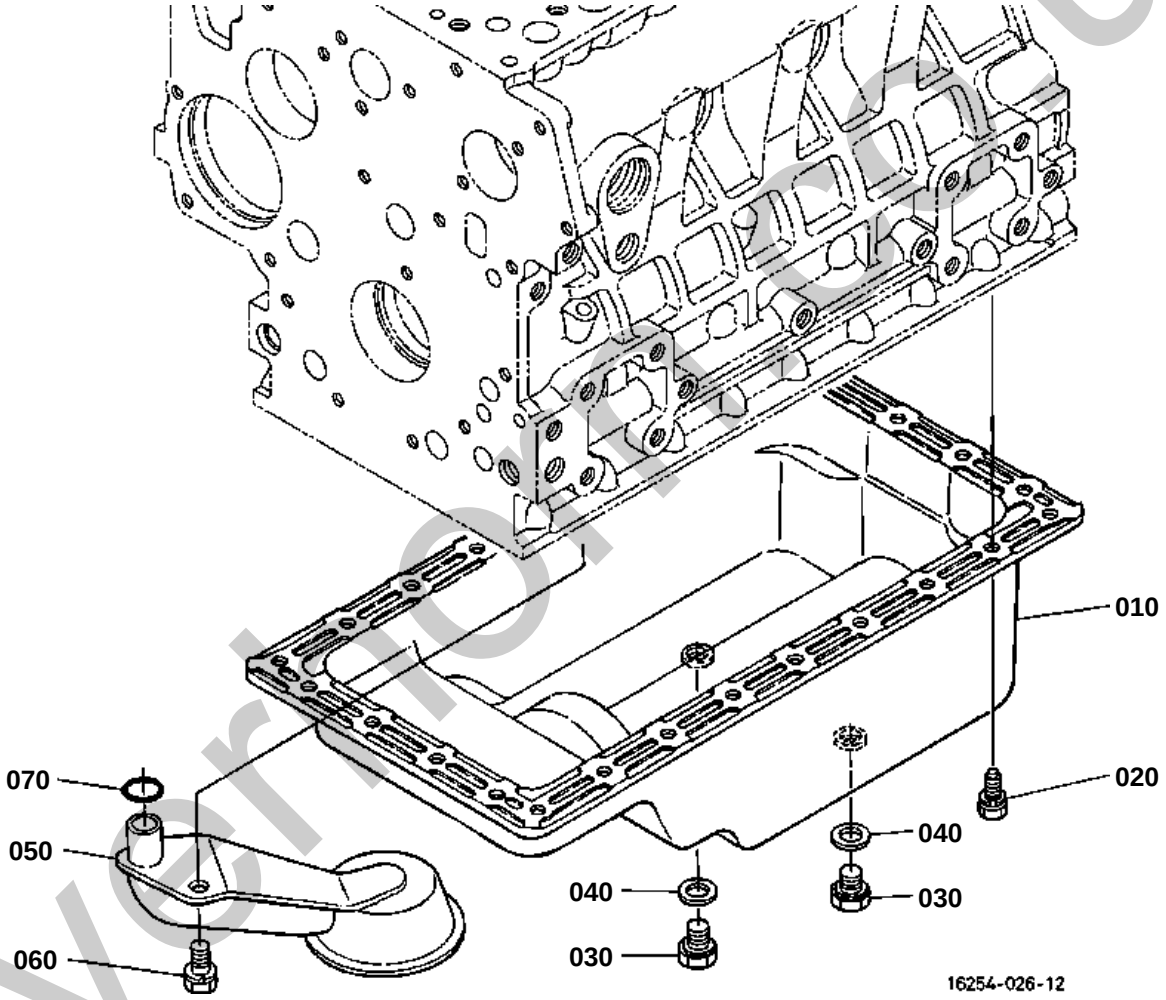

silverhorse.co.uk

OIL PAN

↔ Interchangeable; ≠ not interchangeable; ← new for old; → old for new

REF.No	Part No.	Description	Q'ty	S.No.	I/C	REMARKS	Weight (kgf)	Weight (lb)
010	16271-01502	COMP.OIL PAN	1				1.7	3.74
020	16221-91120	BOLT	26				0.005	0.011
030	16271-33750	PLUG	2				0.1	0.22
040	15471-96650	GASKET	2				0.002	0.0044
050	16271-32115	FILTER OIL	1				0.24	0.528
060	01123-60816	BOLT	1				0.01	0.022
070	04814-00160	O RING	1				0.001	0.0022

silverhorn.co.uk

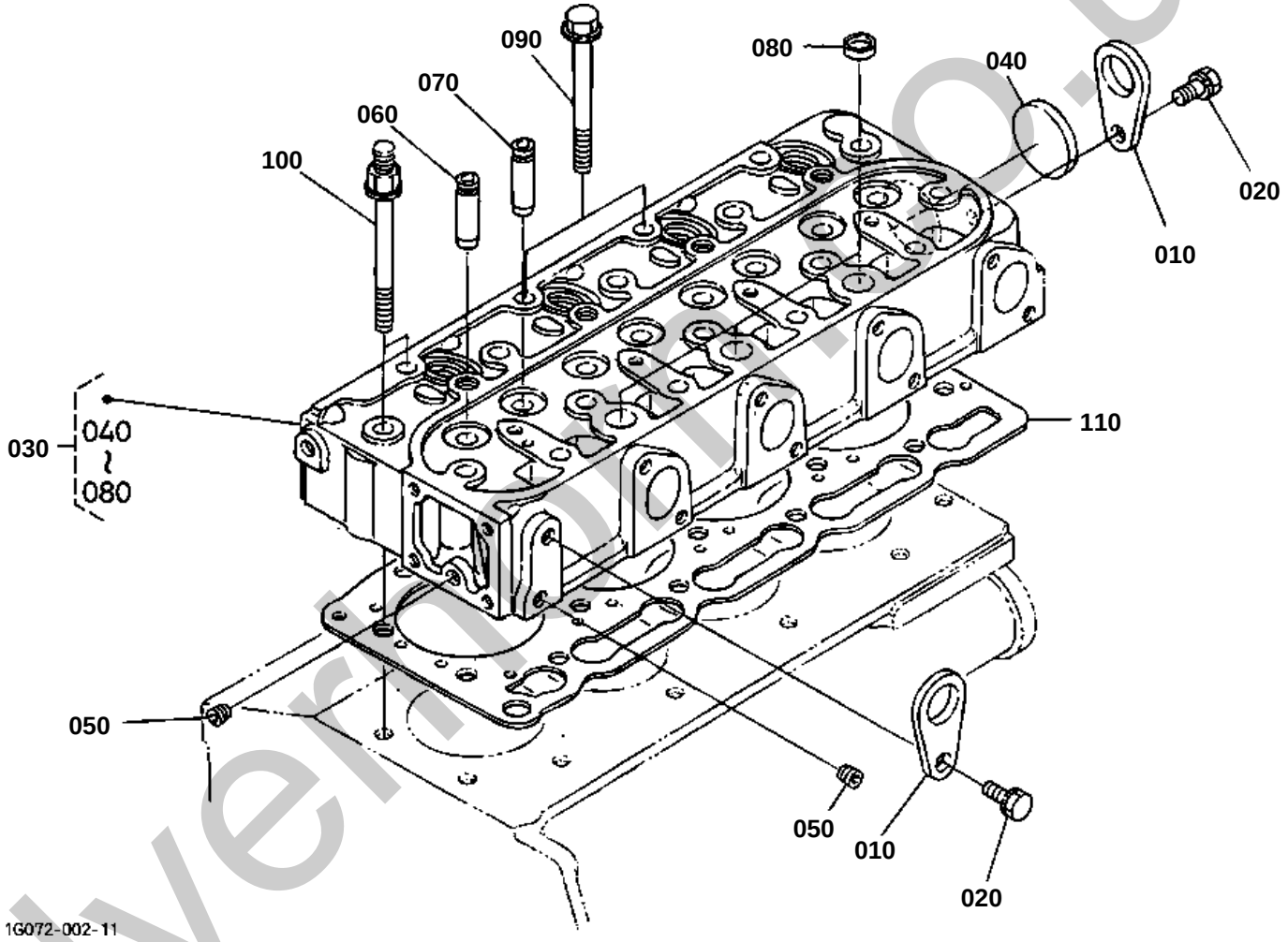

silvermoor.co.uk

CYLINDER HEAD

↔ Interchangeable; ≠ not interchangeable; ← new for old; → old for new

REF.No	Part No.	Description	Q'ty	S.No.	I/C	REMARKS	Weight (kgf)	Weight (lb)
010	15221-01750	HOOK ENGINE	2				0.04	0.088
020	01123-60814	BOLT	2				0.01	0.022
030	1G091-03040	COMP.CYLINDER HEAD	1				12.1	26.62
040	15321-96260	CAP SEALING	1				0.001	0.0022
050	15261-96010	PLUG	2				0.002	0.0044
060	16261-13540	GUIDE INLET VALVE	4				0.02	0.044
070	16261-13560	GUIDE EXHAUST VALVE	4				0.019	0.0418
080	15261-03370	CAP SEALING	3				0.005	0.011
090	16241-03450	BOLT CYLINDER HEAD	16				0.07	0.154
100	16216-03450	BOLT CYLINDER HEAD	2				0.07	0.154
110	16394-03310	GASKET CYLINDER HEAD	1				0.2	0.44

silverhorn.co.uk

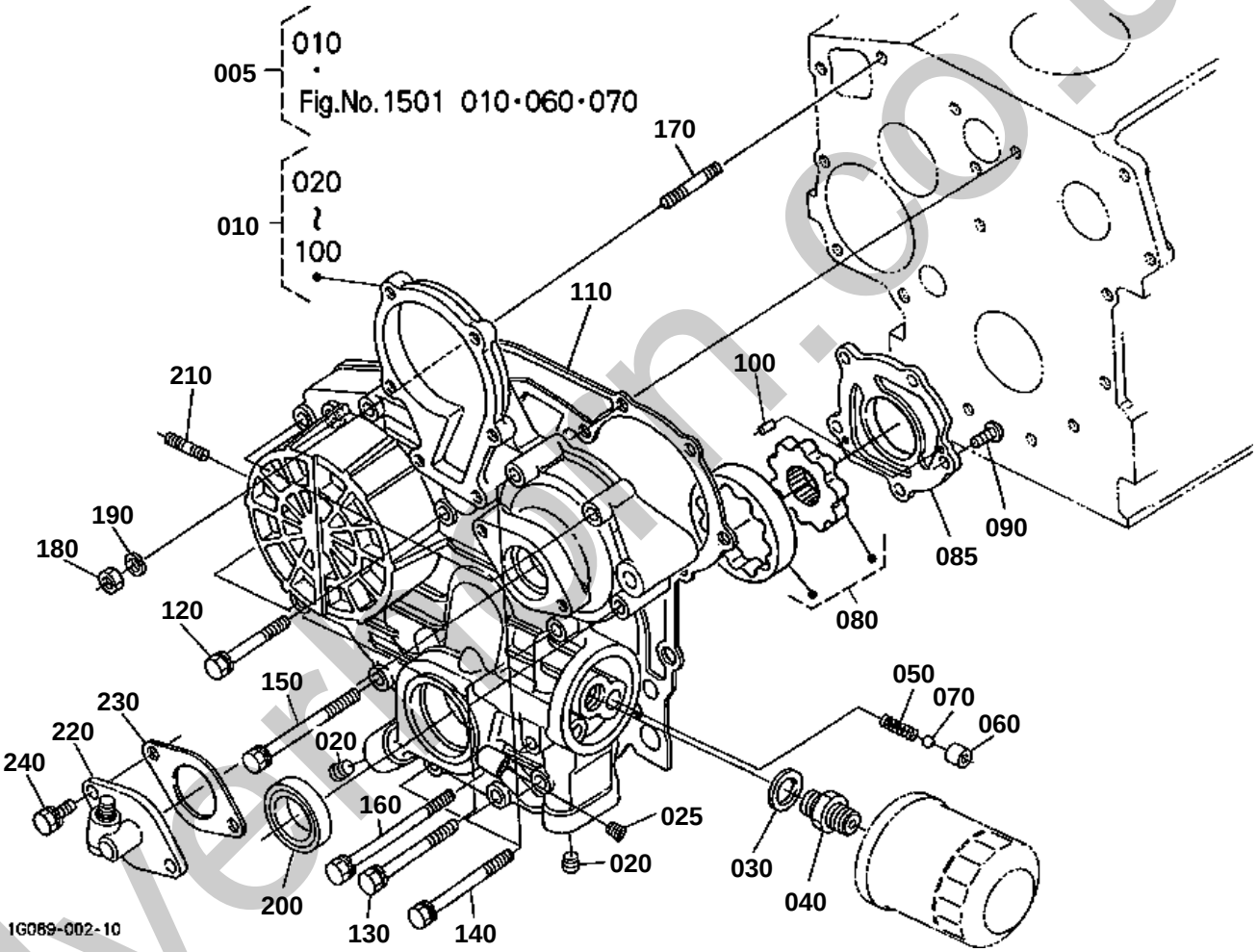

silverlinn.co.uk

↔ Interchangeable; ≠ not interchangeable; ← new for old; → old for new

REF.No	Part No.	Description	Q'ty	S.No.	I/C	REMARKS	Weight (kgf)	Weight (lb)
005	16216-04017	ASSY CASE GEAR	1				3.46	7.612
010	16216-04026	COMP.CASE GEAR	1				2.45	5.39
020	16241-96020	PLUG	2				0.015	0.033
025	15521-96020	PLUG	1				0.003	0.0066
030	04011-50180	WASHER PLAIN	1				0.012	0.0264
040	15241-32290	JOINT PIPE	1				0.053	0.1166
050	16241-36950	SPRING	1				0.015	0.033
060	16241-36930	SEAT VALVE	1				0.032	0.0704
070	07715-00201	BALL	1				0.008	0.0176
080	16241-35070	ASSY ROTOR OIL PUMP	1				0.27	0.594
085	16251-35130	COVER OIL PUMP	1				0.09	0.198
090	03017-50620	SCREW CR-REC-BD-HD	5				0.005	0.011
100	05012-00410	PIN STRAIGHT	2				0.001	0.0022
110	16264-04130	GASKET GEAR CASE	1				0.01	0.022
120	01023-50645	BOLT	3				0.01	0.022
130	01023-60650	BOLT	4				0.015	0.033
140	01023-50655	BOLT	4				0.012	0.0264
150	01023-50665	BOLT	1				0.015	0.033
160	16241-91040	BOLT	1				0.015	0.033
170	16245-91530	STUD	1				0.01	0.022
180	02056-50060	NUT	1				0.002	0.0044
190	04512-60060	WASHER SPRING	1				0.001	0.0022
200	16241-04212	SEAL OIL	1				0.012	0.0264
210	16245-91540	STUD	2				0.005	0.011
220	58417-25950	ASSY GEAR CASE H/M	1				0.29	0.638
230	16264-88130	GASKET H/METER UNIT	1				0.002	0.0044
240	01023-50618	BOLT	2				0.006	0.0132

silverhorn.co.uk

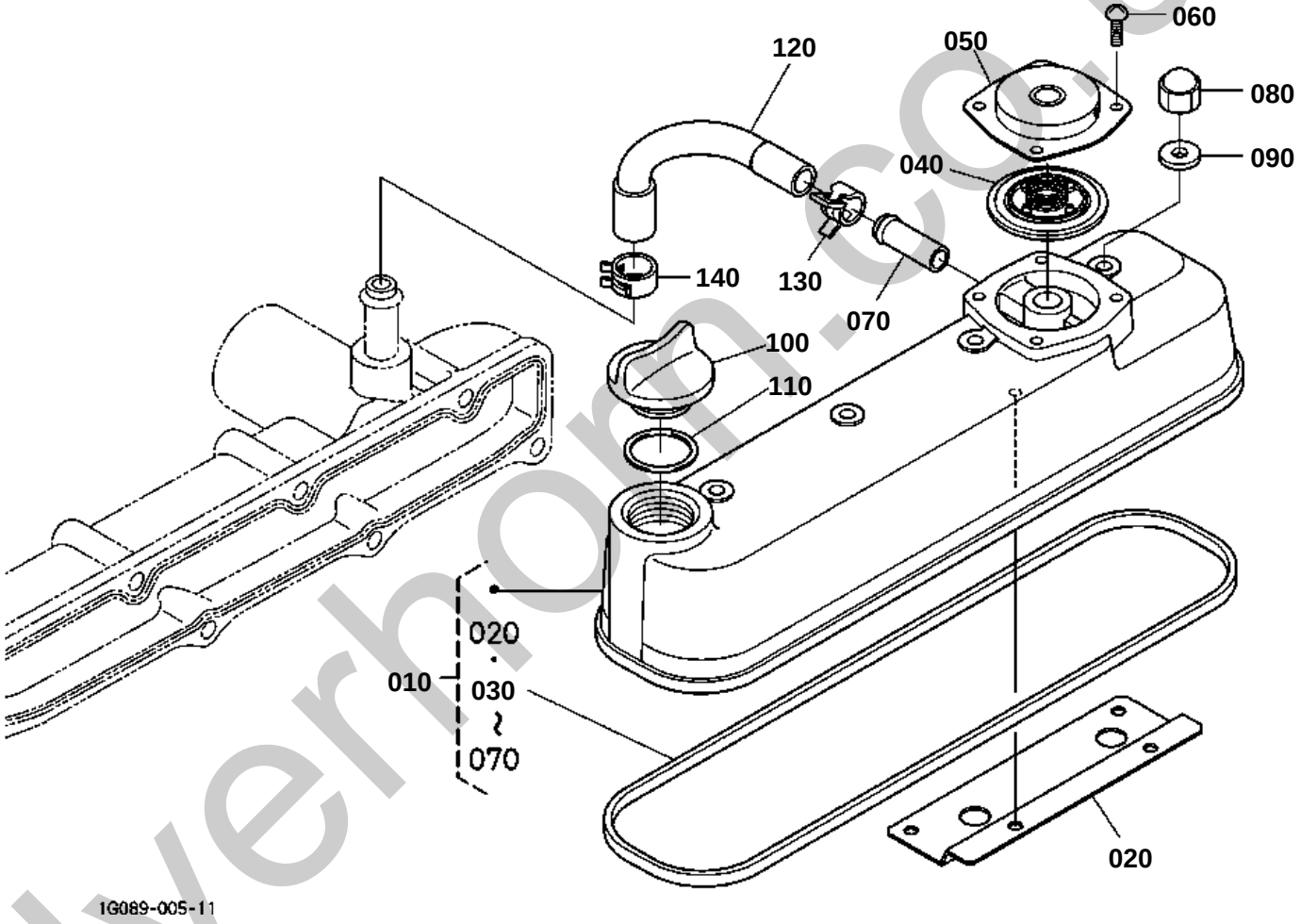

silverhorn.co.uk

HEAD COVER

↔ Interchangeable; ≠ not interchangeable; ← new for old; → old for new

REF.No	Part No.	Description	Q'ty	S.No.	I/C	REMARKS	Weight (kgf)	Weight (lb)
010	1G072-14503	ASSY COVER CYL.HEAD	1				0.98	2.156
020	1G032-05370	SHIELD BREATHER	1				0.03	0.066
030	16241-14520	GASKET HEAD COVER	1				0.012	0.0264
040	1G911-05202	COMP.VALVE BREATHER	1				0.01	0.022
050	1G911-05120	COVER BREATHER	1				0	0
060	03054-50510	SCREW PAN-HEAD	4				0.003	0.0066
070	17331-73342	PIPE WATER RETURN	1				0.01	0.022
080	15952-92330	NUT	4				0.01	0.022
090	15951-96660	GASKET	4				0.001	0.0022
100	E9151-33140	PLUG OIL FILLER	1				0.017	0.0374
110	04814-50300	O RING	1				0.001	0.0022
120	1G032-05510	TUBE BREATHER	1				0.017	0.0374
130	09318-88150	CLAMP HOSE	1				0.004	0.0088
140	16259-05580	CLAMP HOSE	1				0.03	0.066

silverhorn.co.uk

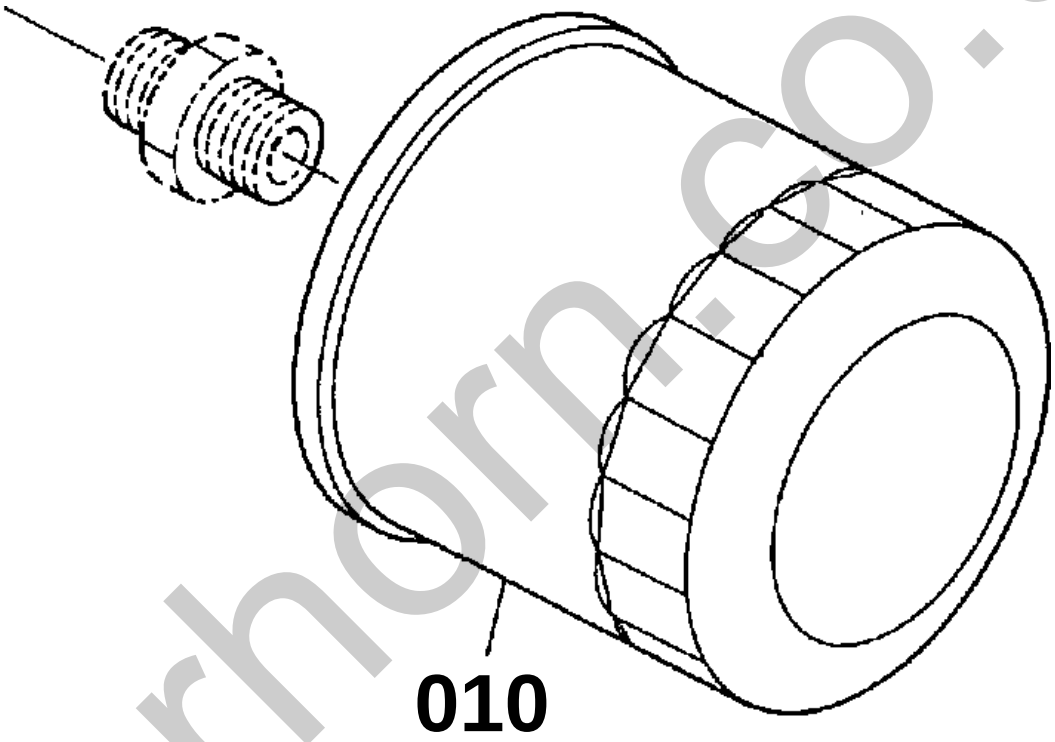

16615-003-10

silverhorn.co.uk

↔ Interchangeable; ≠ not interchangeable; ← new for old; → old for new

REF.No	Part No.	Description	Q'ty	S.No.	I/C	REMARKS	Weight (kgf)	Weight (lb)
010	16271-32092	ASSY CARTRIDGE OIL	1				0.4	0.88

silverhorn.co.uk

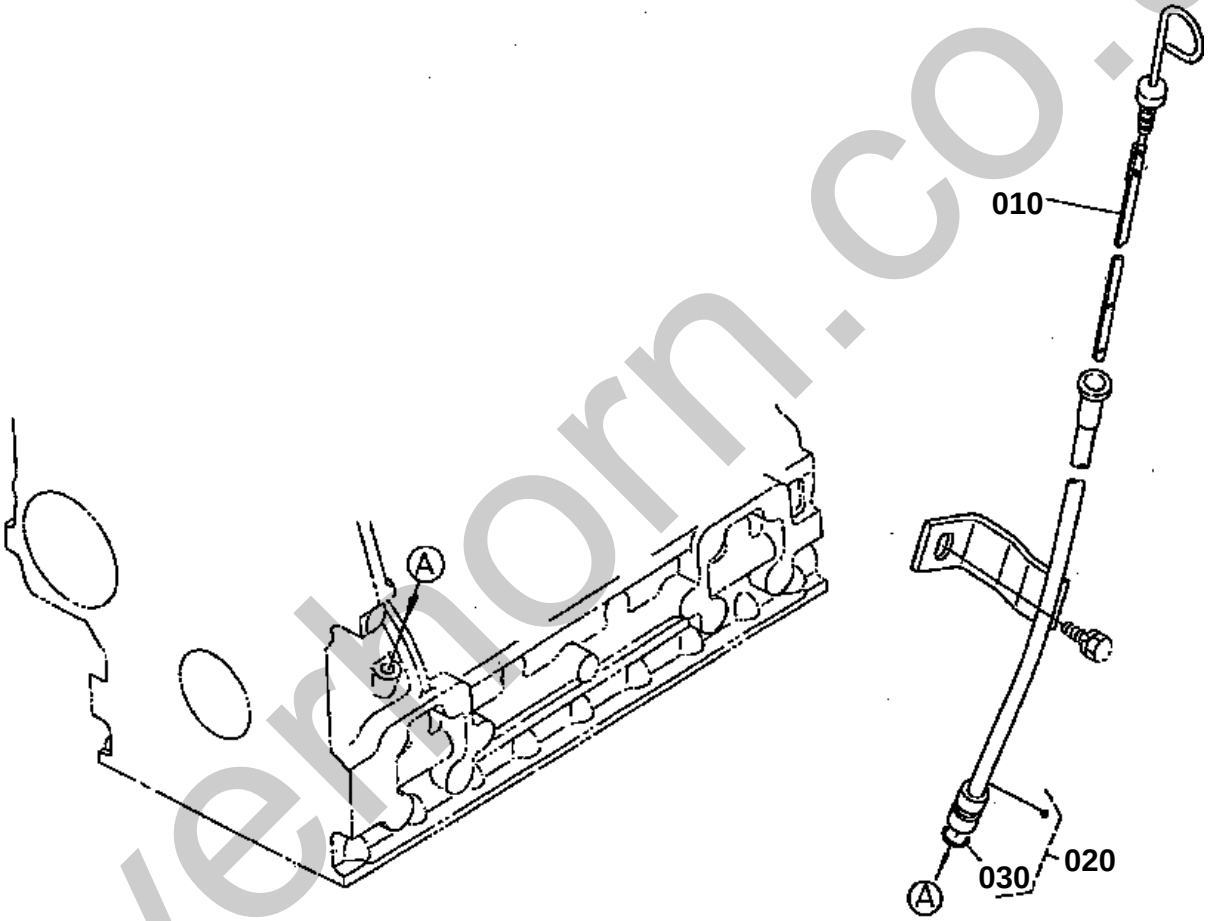

16254-022-10

silverthorn.co.uk

DIPSTICK AND GUIDE

↔ Interchangeable; ≠ not interchangeable; ← new for old; → old for new

REF.No	Part No.	Description	Q'ty	S.No.	I/C	REMARKS	Weight (kgf)	Weight (lb)
010	16216-36413	GAUGE OIL	1				0.03	0.066
020	16216-36503	ASSY GUIDE OIL GAUGE	1				0.14	0.308
030	04814-00090	O RING	1				0.001	0.0022

silverhorn.co.uk

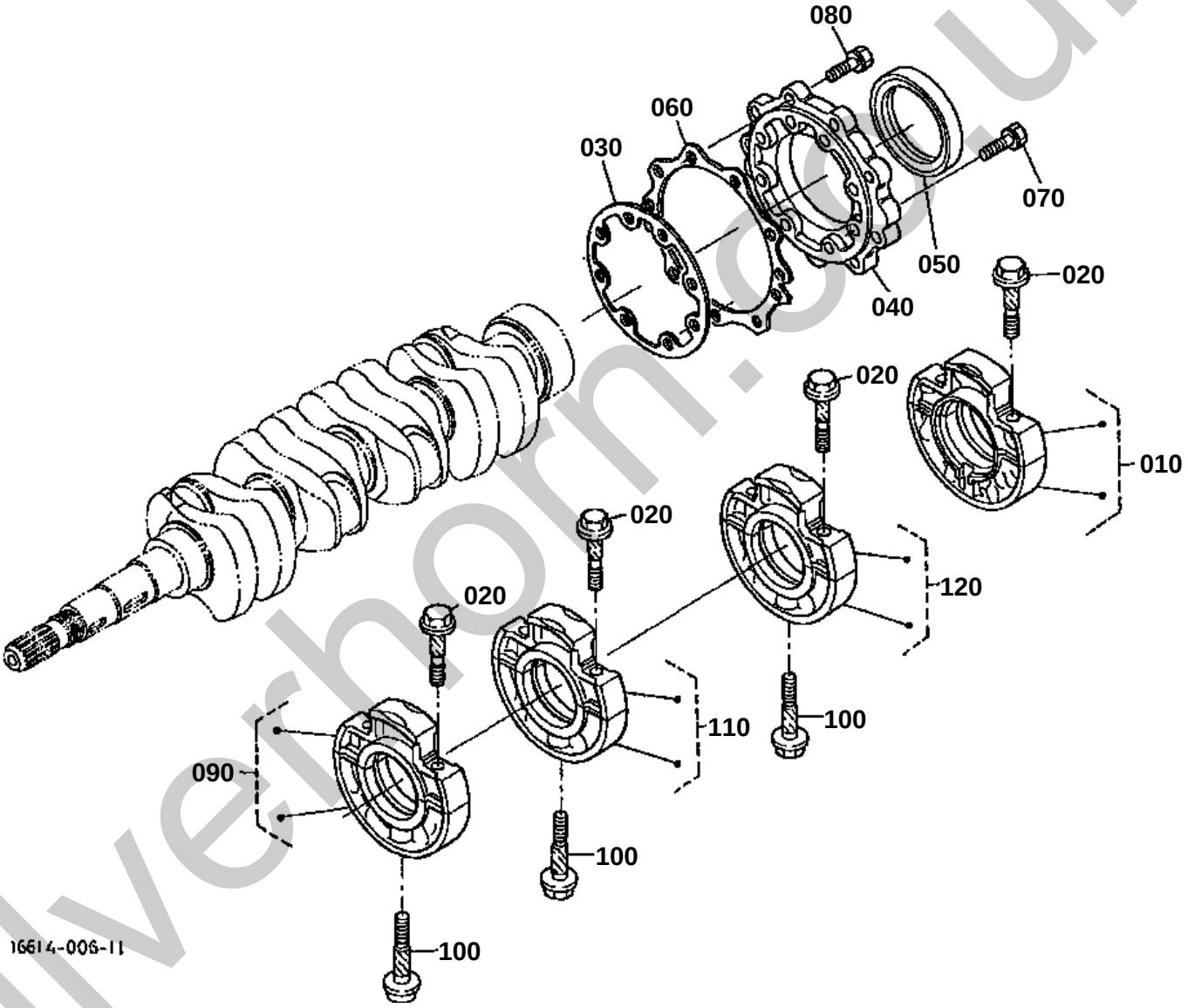

silverhorn.co.uk

MAIN BEARING CASE

↔ Interchangeable; ≠ not interchangeable; ← new for old; → old for new

REF.No	Part No.	Description	Q'ty	S.No.	I/C	REMARKS	Weight (kgf)	Weight (lb)
010	16241-04092	ASSY CASE MAIN BRG.	1				1.13	2.486
020	16241-04540	BOLT BEARING CASE	8				0.02	0.044
030	16264-04360	GASKET BRG.CASE	1				0.002	0.0044
040	16241-04813	COVER BEARING CASE	1				0.22	0.484
050	16271-04460	SEAL OIL	1				0.04	0.088
060	16264-04820	GASKET	1				0.008	0.0176
070	01023-50625	BOLT	8				0.007	0.0154
080	01023-50620	BOLT	9				0.006	0.0132
090	16261-04040	ASSY CASE MAIN BRG.	1				0.9	1.98
100	16241-04560	BOLT BEARING CASE	3				0.03	0.066
110	16261-04050	ASSY CASE MAIN BRG.	1				1.11	2.442
120	16282-04060	ASSY CASE MAIN BRG.	1				1	2.2

silverhorn.co.uk

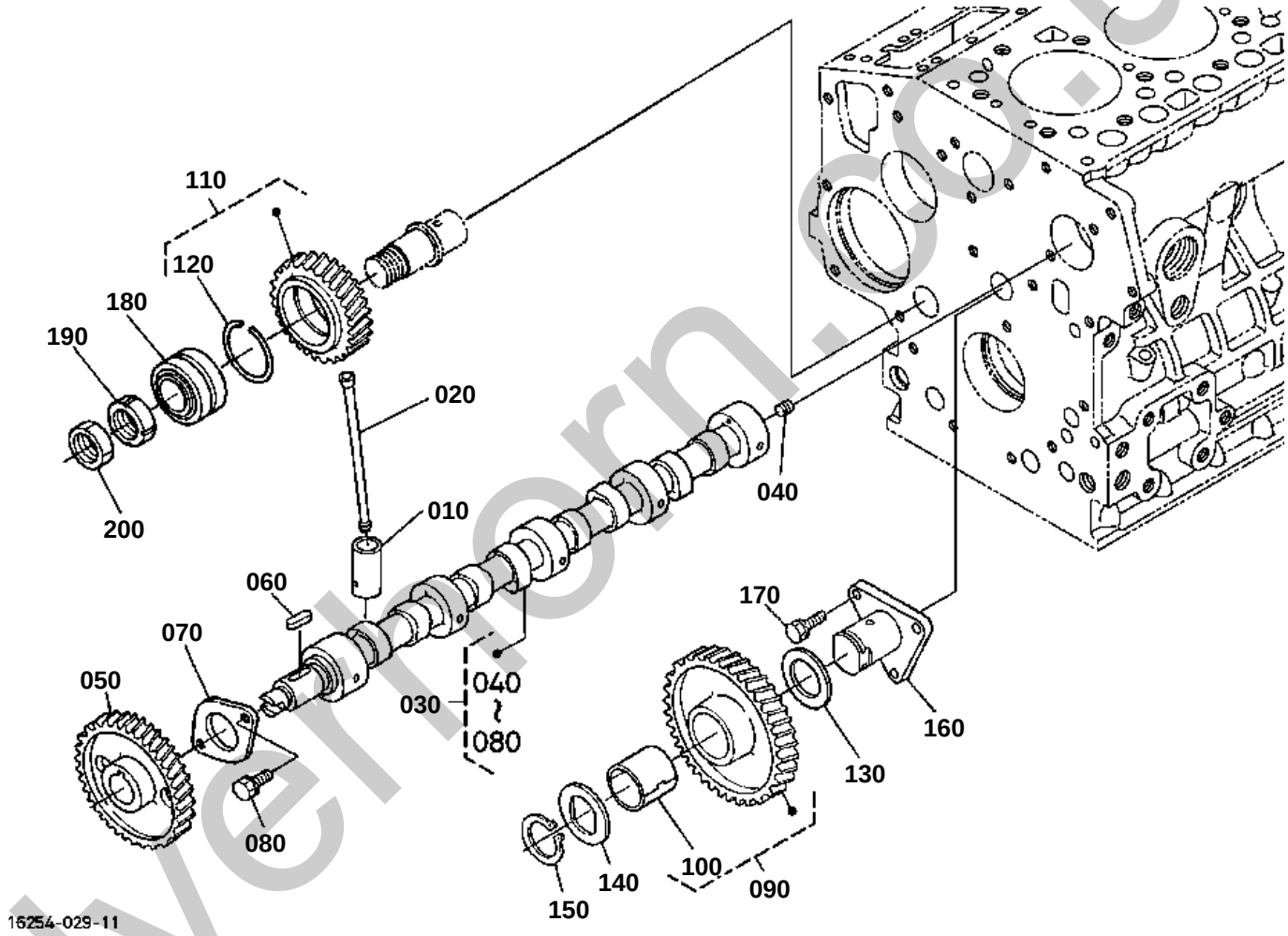

silverthorn.co.uk

CAMSHAFT AND IDLE GEAR SHAFT

↔ Interchangeable; ≠ not interchangeable; ← new for old; → old for new

REF.No	Part No.	Description	Q'ty	S.No.	I/C	REMARKS	Weight (kgf)	Weight (lb)
010	16261-15550	TAPPET	8				0.035	0.077
020	16241-15110	PUSH ROD	8				0.03	0.066
030	16697-16910	ASSY CAMSHAFT	1				1.84	4.048
040	15521-93610	SCREW SET	1				0.002	0.0044
050	16241-16510	GEAR CAM	1				0.45	0.99
060	05712-00518	KEY FEATHER	1				0.003	0.0066
070	16241-16270	STOPPER CAMSHAFT	1				0.04	0.088
080	01023-50616	BOLT	2				0.005	0.011
090	16251-24010	COMP GEAR IDLE	1				0.63	1.386
100	16251-24980	BUSH IDLE GEAR	1				0.035	0.077
110	16251-24020	COMP GEAR IDLE	1				1.6	3.52
120	16251-24320	CIR CLIP INTERNAL	1				0.01	0.022
130	16251-24360	COLLAR IDLE GEAR	1				0.012	0.0264
140	15741-24370	COLLAR IDLE GEAR	1				0.015	0.033
150	15741-24320	CIR CLIP IDLE GEAR	1				0.01	0.022
160	16251-24250	SHAFT IDLE GEAR	1				0.36	0.792
170	01023-50616	BOLT	3				0.005	0.011
180	16251-24350	BEARING TAPER-ROLLER	1				0.21	0.462
190	02410-00040	NUT BEARING	1				0.019	0.0418
200	16251-92210	NUT LOCK	1				0.01	0.022

silverhorn.co.uk

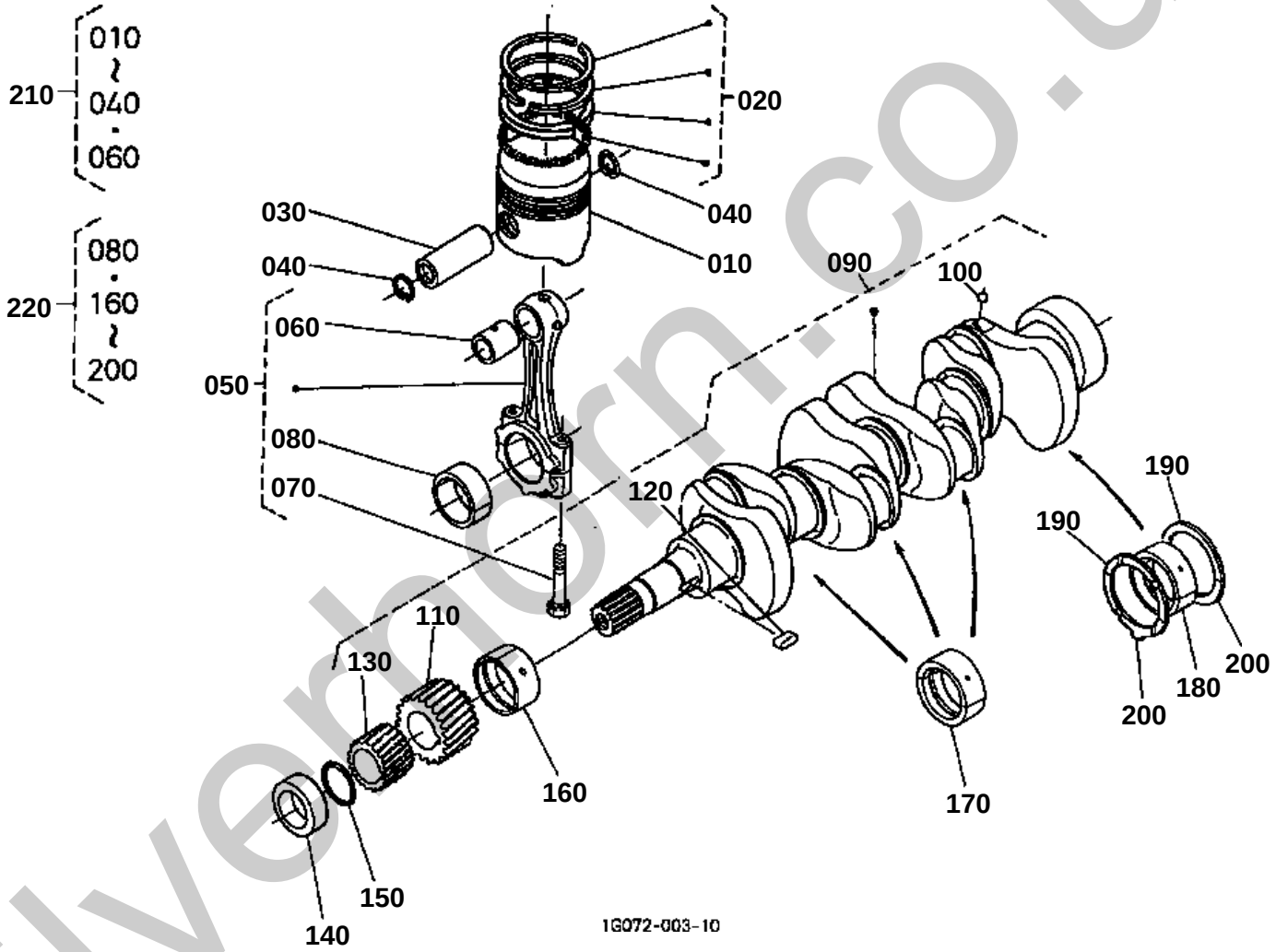

silverhorn.co.uk

PISTON AND CRANKSHAFT

↔ Interchangeable; ≠ not interchangeable; ← new for old; → old for new

REF.No	Part No.	Description	Q'ty	S.No.	I/C	REMARKS	Weight (kgf)	Weight (lb)
010	16060-21110	PISTON	4			STD	0.4	0.88
010	16060-21910	PISTON	4			+0.50mm	0.415	0.913
020	16261-21050	ASSY PISTON RING	4			STD	0.042	0.0924
020	16261-21090	ASSY PISTON RING	4			+0.50mm	0.05	0.11
030	16241-21310	PIN PISTON	4				0.135	0.297
040	16241-21330	CIR CLIP PISTON PIN	8				0.002	0.0044
050	16241-22012	ASSY ROD CONNECTING	4				0.545	1.199
060	16241-21982	BUSH PISTON PIN	4				0.03	0.066
070	16241-22142	BOLT CONNECTING ROD	8				0.024	0.0528
080	16241-22310	METAL CRANKPIN	4			STD SET	0.038	0.0836
080	16241-22970	METAL CRANKPIN	4			-0.20mm SET	0.08	0.176
080	16241-22980	METAL CRANKPIN	4			-0.40mm SET	0.1	0.22
090	16271-23013	COMP.CRANKSHAFT	1				5	11
100	07715-00401	BALL	4				0.001	0.0022
110	16241-24110	GEAR CRANK	1				0.15	0.33
120	16271-95230	KEY	1				0.005	0.011
130	16241-35630	GEAR OIL PUMP DRIVE	1				0.102	0.2244
140	16271-23250	COLLAR CRANKSHAFT	1				0.055	0.121
150	04814-10280	RING	1				0.001	0.0022
160	16241-23470	METAL CRANKSHAFT	1			STD	0.06	0.132
160	16241-23910	METAL CRANKSHAFT	1			-0.20mm	0.03	0.066
160	16241-23920	METAL CRANKSHAFT	1			-0.40mm	0.068	0.1496
170	16241-23480	METAL CRANKSHAFT	3			STD SET	0.05	0.11
170	16241-23930	METAL CRANKSHAFT	3			-0.20mm SET	0.1	0.22
170	16241-23940	METAL CRANKSHAFT	3			-0.40mm SET	0.05	0.11
180	16292-23490	METAL CRANKSHAFT	1			STD SET	0.07	0.154
180	16292-23860	METAL CRANKSHAFT	1			-0.20mm SET	0.05	0.11
180	16292-23870	METAL CRANKSHAFT	1			-0.40mm SET	0.05	0.11
190	15521-23530	METAL SIDE	2			STD	0.01	0.022
190	15521-23950	METAL SIDE	2			+0.20mm	0.01	0.022
190	15521-23960	METAL SIDE	2			+0.40mm	0.01	0.022
200	19202-23540	METAL SIDE	2			STD	0.01	0.022
200	19202-23970	METAL SIDE	2			+0.20mm	0.01	0.022
200	19202-23980	METAL SIDE	2			+0.40mm	0.01	0.022
210	1G069-21772	KIT PISTON-RING	4			STD	0.65	1.43
210	1G069-21792	KIT PISTON-RING	4			+0.50mm	6.056	13.3232
220	1G090-23753	KIT METAL ENGINE	1			STD	0	0
220	1G090-23763	KIT METAL ENGINE	1			+0.20mm	0.518	1.1396
220	1G090-23773	KIT METAL ENGINE	1			+0.40mm	0.547	1.2034

silvernorn.co.uk

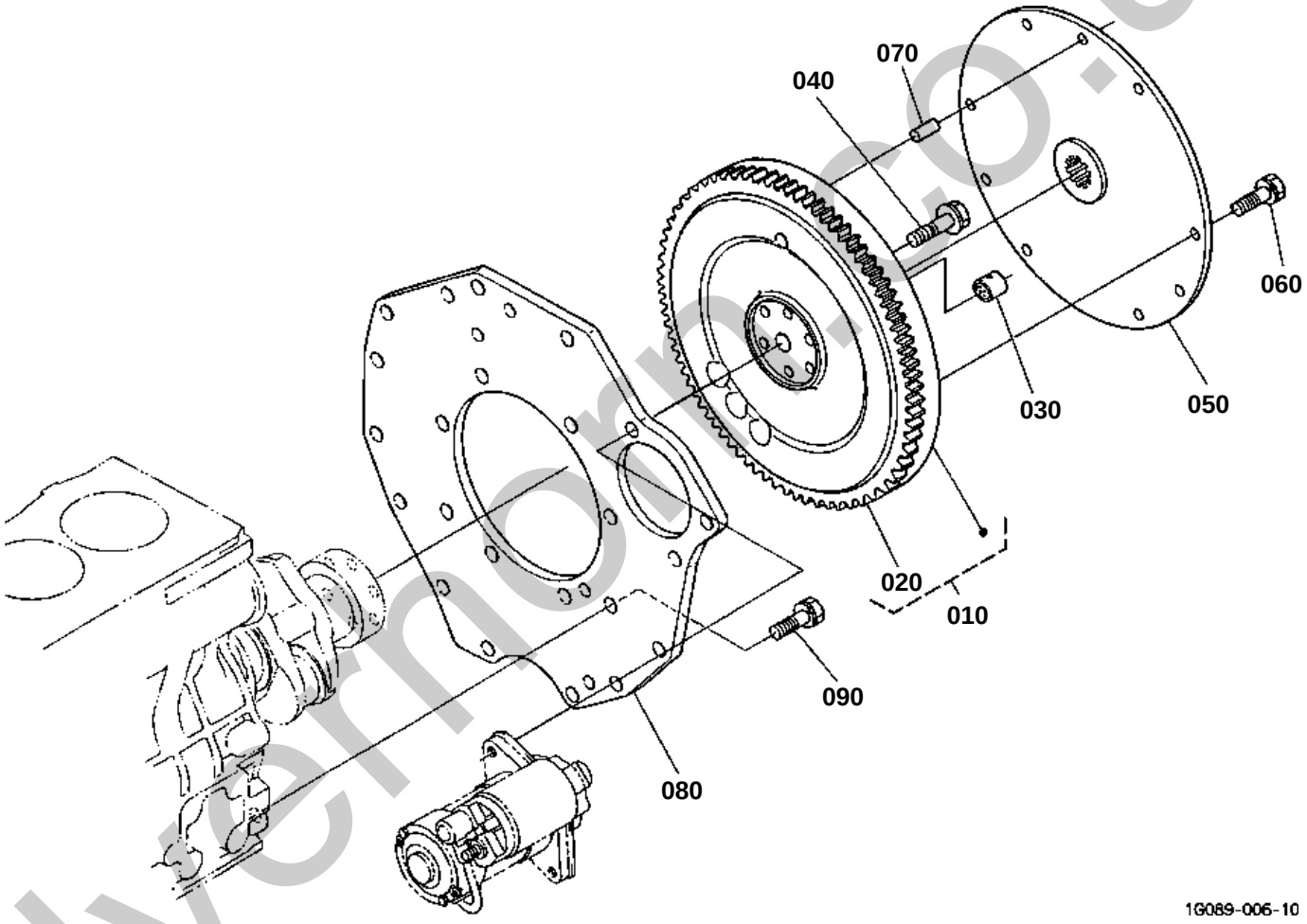

silvermore.co.uk

FLYWHEEL

↔ Interchangeable; ≠ not interchangeable; ← new for old; → old for new

REF.No	Part No.	Description	Q'ty	S.No.	I/C	REMARKS	Weight (kgf)	Weight (lb)
010	17451-25012	COMP.FLYWHEEL	1				17.3	38.06
020	16261-63822	GEAR RING	1				0.79	1.738
030	66621-14120	BEARING DRY	1				0.006	0.0132
040	16271-25160	BOLT FLYWHEEL	6				0.036	0.0792
050	6C200-13412	PLATE	1				0	0
060	01123-60816	BOLT	6				0.01	0.022
070	05012-00814	PIN STRAIGHT	3				0.006	0.0132
080	6C040-58912	PLATE REAR END	1				3.64	8.008
090	15261-91190	BOLT	8				0.03	0.066

silverhorn.co.uk

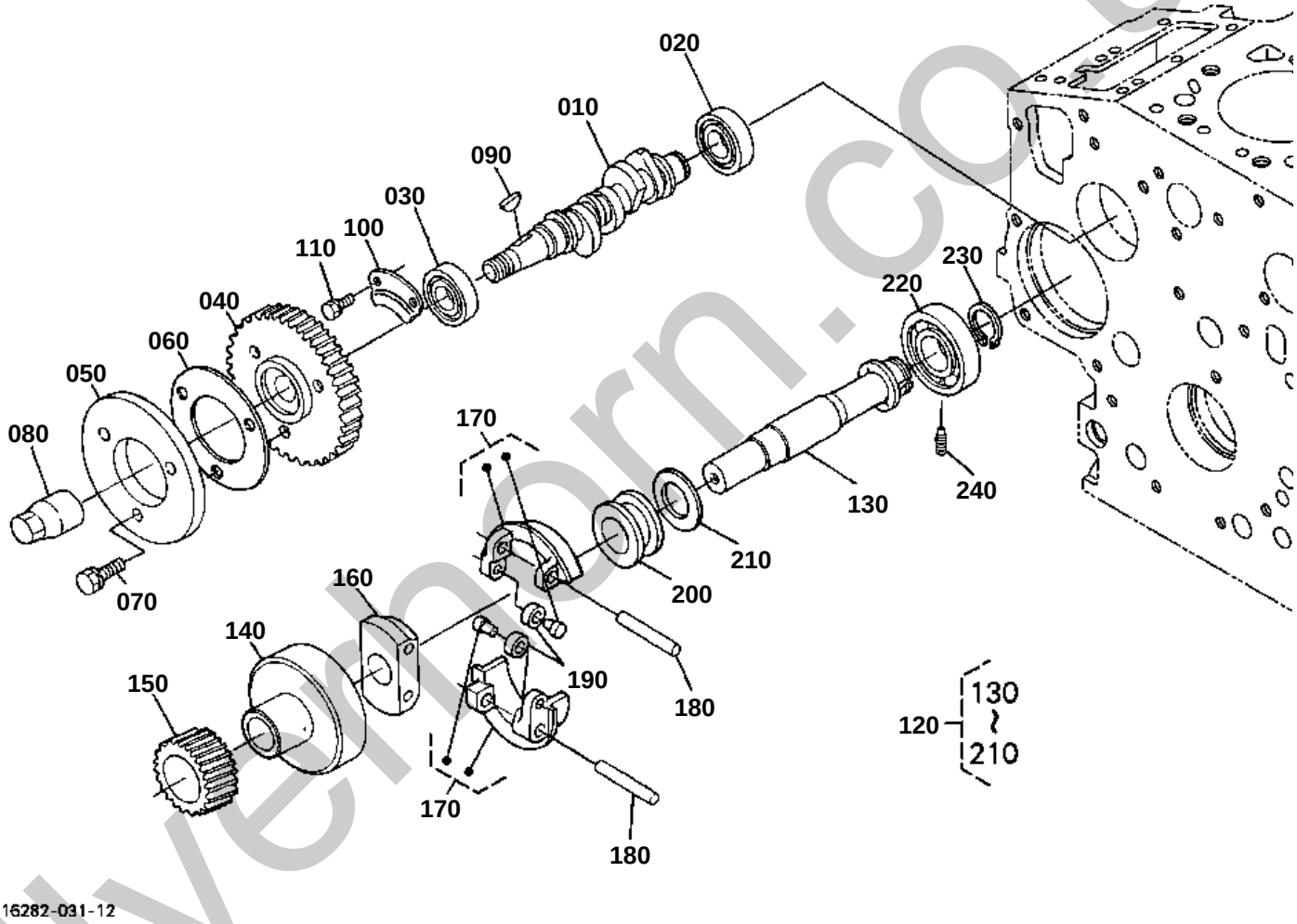

silvermorn.co.uk

FUEL CAMSHAFT AND GOVERNOR SHAFT

↔ Interchangeable; ≠ not interchangeable; ← new for old; → old for new

REF.No	Part No.	Description	Q'ty	S.No.	I/C	REMARKS	Weight (kgf)	Weight (lb)
010	16040-16170	CAMSHAFT FUEL	1				0.32	0.704
020	16261-97300	BEARING BALL	1				0.044	0.0968
030	16261-97310	BEARING BALL	1				0.1	0.22
040	1G065-51150	GEAR INJECTION PUMP	1				0.49	1.078
050	16241-51113	CAM FUEL	1				0.196	0.4312
060	16241-51190	WASHER	1				0.029	0.0638
070	01023-50618	BOLT	3				0.006	0.0132
080	16241-92330	NUT	1				0.035	0.077
090	16241-95230	KEY WOODRUFF	1				0.001	0.0022
100	16241-16320	STOPPER FUEL.C/SHAFT	1				0.04	0.088
110	01023-50616	BOLT	2				0.005	0.011
120	16271-55013	ASSY SHAFT GOVERNOR	1				1.16	2.552
130	16271-55313	SHAFT GOVERNOR	1				0.343	0.7546
140	16241-55392	HOLDER GOVERNOR GEAR	1				0.34	0.748
150	16271-55320	GEAR GOVERNOR	1				0.145	0.319
160	16241-55270	HOLDER GOV.WEIGHT	1				0.085	0.187
170	16271-55060	COMP.WEIGHT GOVERNOR	2				0.067	0.1474
180	16241-55260	SHAFT GOV. WEIGHT	2				0.013	0.0286
190	19484-55440	ROLLER	2				0.005	0.011
200	16241-55450	SLEEVE GOVERNOR	1				0.04	0.088
210	16241-55463	WASHER THRUST	1				0.005	0.011
220	16261-97320	BEARING BALL	1				0.14	0.308
230	16271-55410	CIR CLIP GOV.SHAFT	1				0.005	0.011
240	16241-55554	SCREW SET	1				0.007	0.0154

silverhorn.co.uk

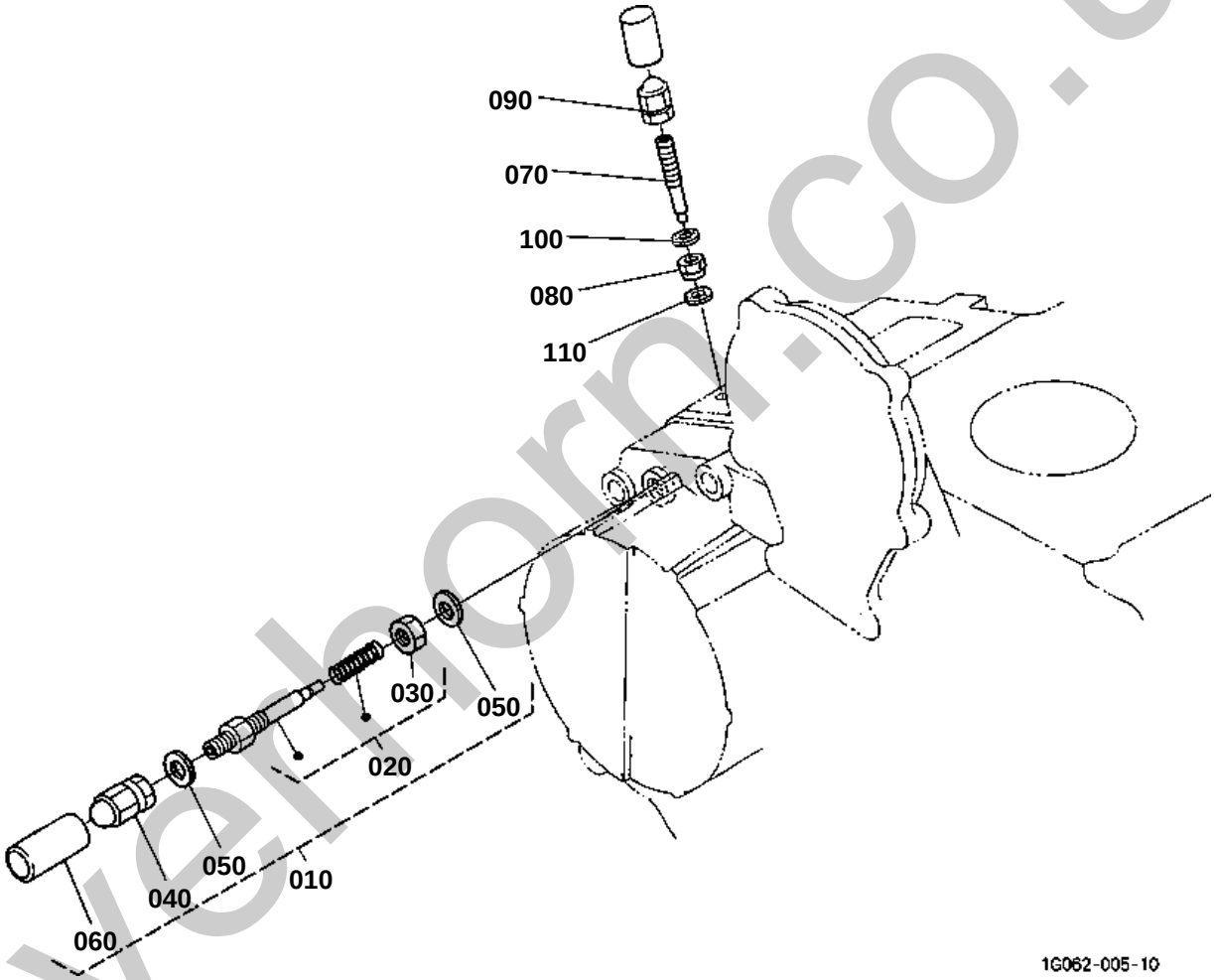

silverhorn.co.uk

IDLE APPARATUS

↔ Interchangeable; ≠ not interchangeable; ← new for old; → old for new

REF.No	Part No.	Description	Q'ty	S.No.	I/C	REMARKS	Weight (kgf)	Weight (lb)
010	16271-54093	APPARATUS IDLING	1				0.029	0.0638
020	16241-54103	ASSY BOLT ADJUSTMENT	1				0.008	0.0176
030	15841-92020	NUT	1				0.004	0.0088
040	15852-92330	NUT	1				0.005	0.011
050	15601-96650	GASKET	2				0.001	0.0022
060	16221-54420	CAP	1				0.001	0.0022
070	16241-54122	BOLT ADJUSTING	1				0.005	0.011
080	1G031-54210	NUT LOCK	1				0.003	0.0066
090	15852-92330	NUT	1				0.005	0.011
100	15601-96650	GASKET	1				0.001	0.0022
110	1G021-96650	GASKET	1				0.001	0.0022

silverhorn.co.uk

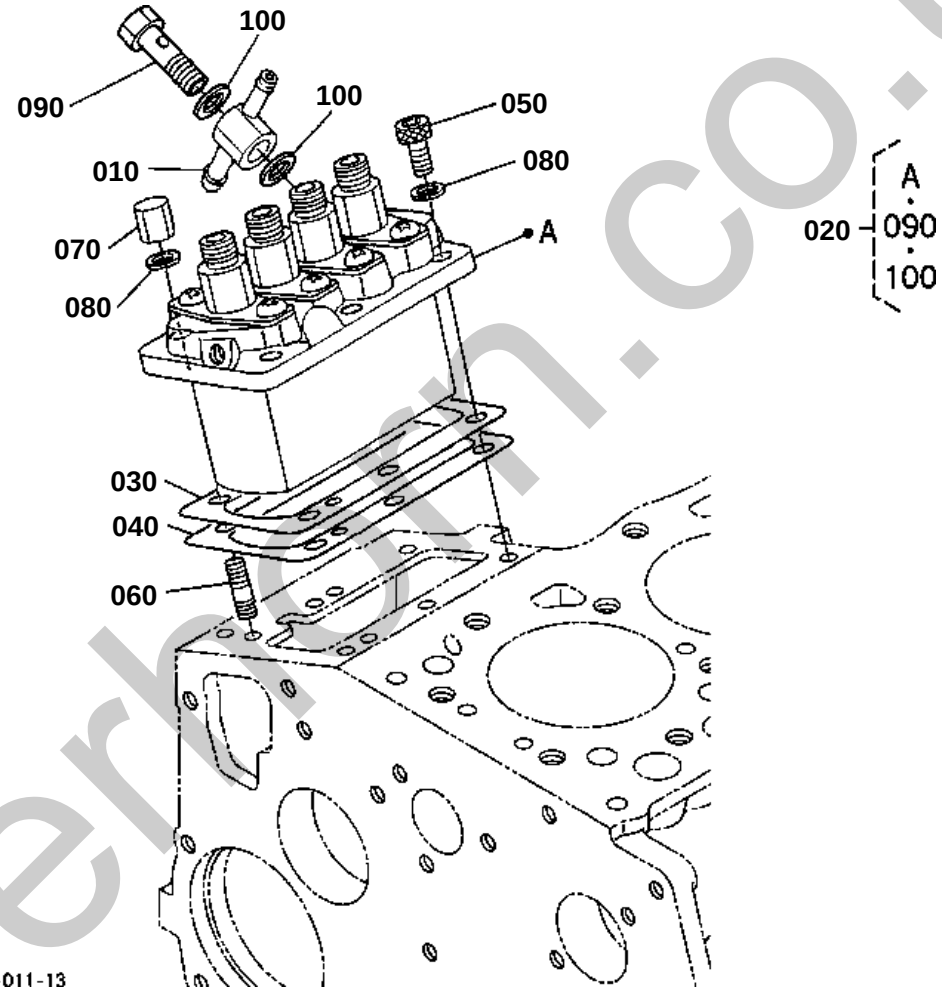

silverhorn.co.uk

↔ Interchangeable; ≠ not interchangeable; ← new for old; → old for new

REF.No	Part No.	Description	Q'ty	S.No.	I/C	REMARKS	Weight (kgf)	Weight (lb)
010	16271-95690	JOINT EYE	1				0.046	0.1012
020	16062-51010	ASSY PUMP INJECTION	1				1.38	3.036
030	16040-52092	SHIM INJECTION PUMP	1			0.20mm	0.004	0.0088
030	16040-52112	SHIM INJECTION PUMP	1			0.25mm	0.005	0.011
040	16040-52122	SHIM INJECTION PUMP	1			0.30mm	0.006	0.0132
050	01311-10620	BOLT HEX-SOC-HD	3				0.012	0.0264
060	15841-91500	STUD	3				0.02	0.044
070	15841-92320	NUT	3				0.01	0.022
080	04512-60060	WASHER SPRING	6				0.001	0.0022
090	16271-51320	SCREW HOLLOW	1				0.031	0.0682
100	15841-96650	GASKET	2				0.001	0.0022

silverhorn.co.uk

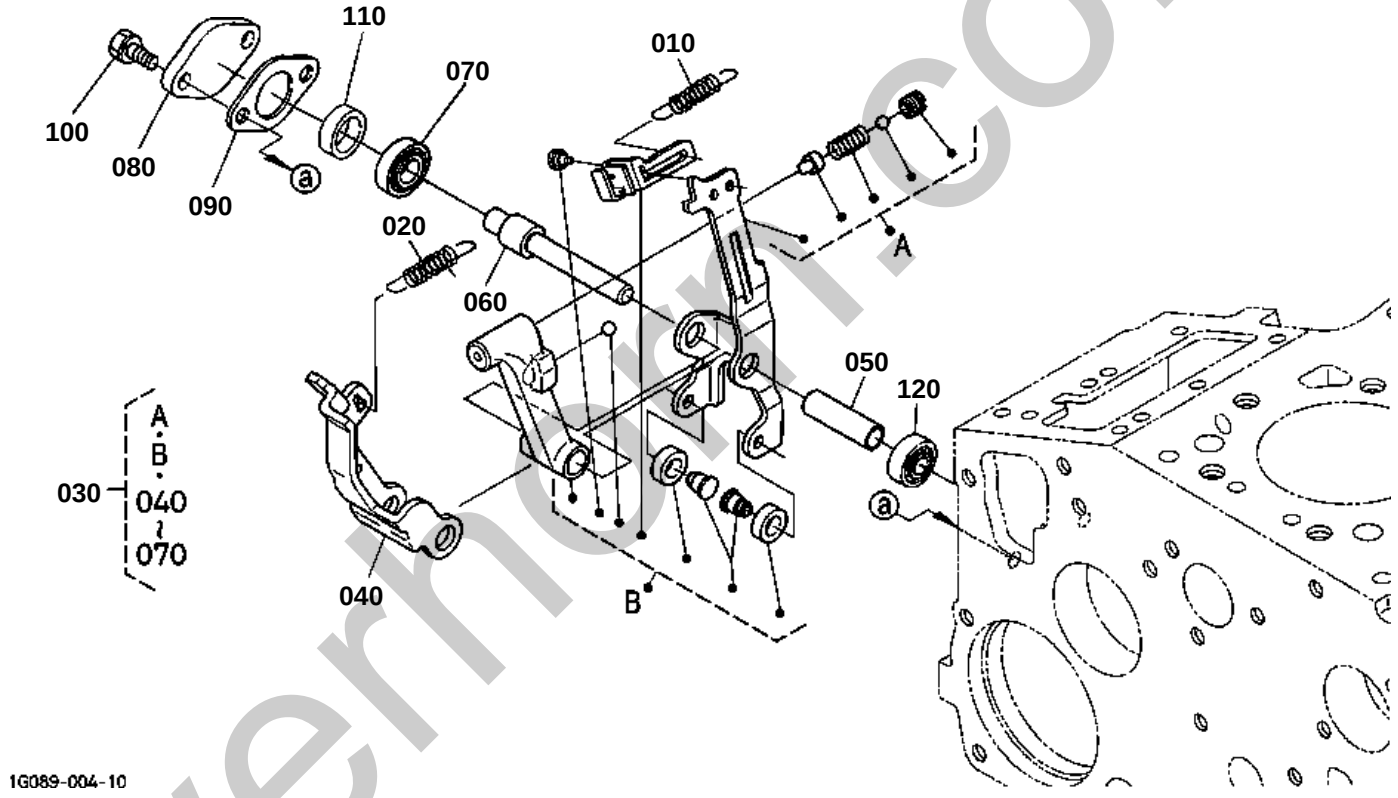

silverhorn.co.uk

GOVERNOR

↔ Interchangeable; ≠ not interchangeable; ← new for old; → old for new

REF.No	Part No.	Description	Q'ty	S.No.	I/C	REMARKS	Weight (kgf)	Weight (lb)
010	17459-56480	SPRING START	1				0.001	0.0022
020	1G043-56410	SPRING GOVERNOR	1				0.019	0.0418
030	1G072-56014	ASSY LEVER FORK	1				0.26	0.572
040	1G032-56130	LEVER FORK	1				0.08	0.176
050	1G032-56150	SHAFT FORK LEVER	1				0.007	0.0154
060	1G032-56470	SHAFT FORK LEVER	1				0.04	0.088
070	16241-56330	BEARING MINIATURIZE	1				0.007	0.0154
080	16241-56250	COVER FORK LEV.SHAFT	1				0.013	0.0286
090	16299-56260	GASKET	1				0.002	0.0044
100	01023-50614	BOLT	2				0.005	0.011
110	16241-56210	COLLAR	1				0.008	0.0176
120	16241-56340	BEARING MINIATURIZE	1				0.007	0.0154

silverhorn.co.uk

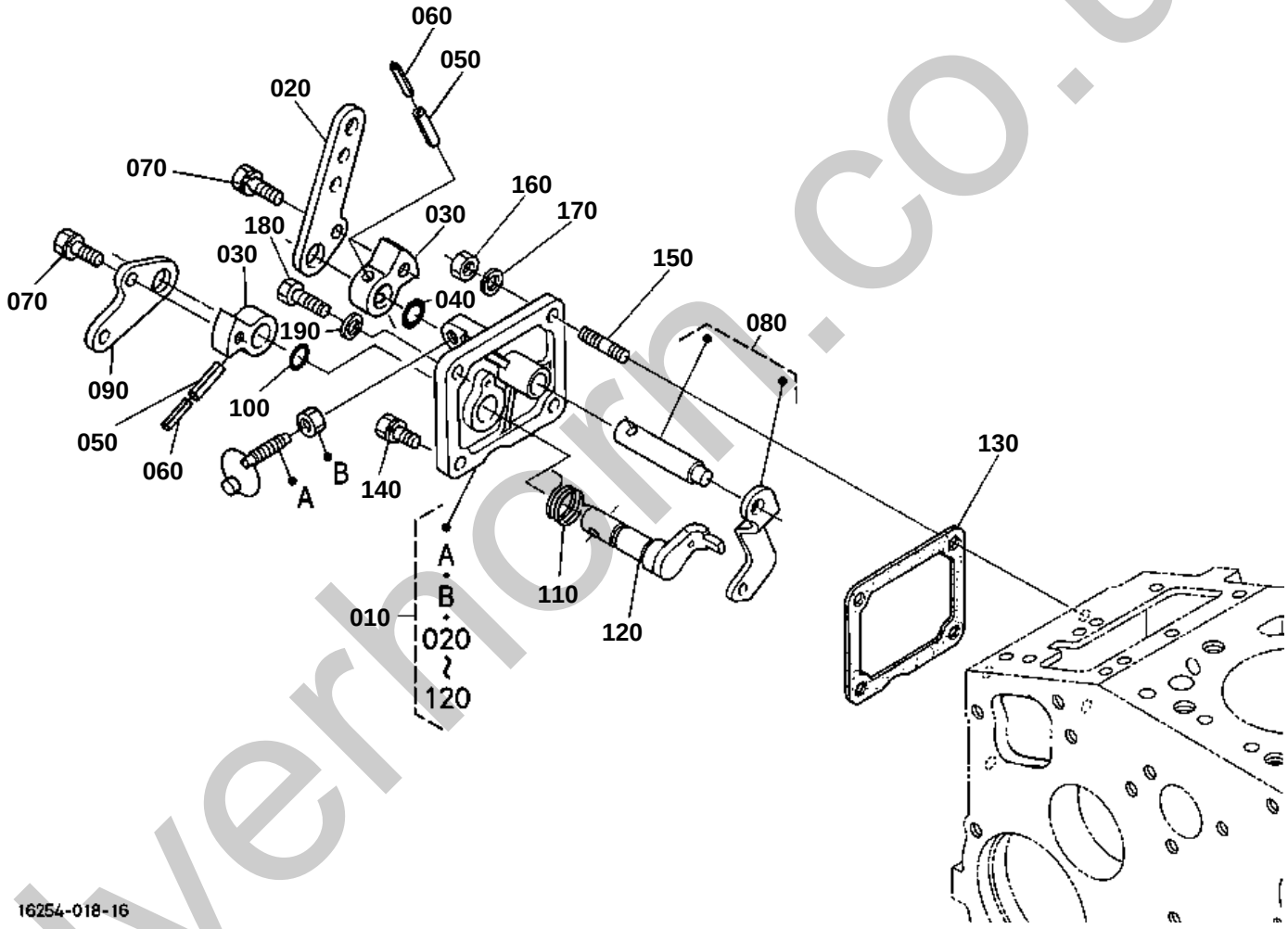

silverhorn.co.uk

SPEED CONTROL PLATE

↔ Interchangeable; ≠ not interchangeable; ← new for old; → old for new

REF.No	Part No.	Description	Q'ty	S.No.	I/C	REMARKS	Weight (kgf)	Weight (lb)
010	16205-57010	ASSY PLATE CONTROL	1				0.34	0.748
020	16205-57150	LEVER SPEED CONTROL	1				0.033	0.0726
030	16205-57160	LEVER SPEED CONTROL	2				0.03	0.066
040	04814-00100	O RING	1				0.001	0.0022
050	05411-00420	PIN SPRING	2				0.001	0.0022
060	05411-02520	PIN SPRING	2				0.001	0.0022
070	01023-50612	BOLT	2				0.005	0.011
080	16205-56020	COMP.LEVER GOVERNOR	1				0.02	0.044
090	16205-57720	LEVER ENGINE STOP	1				0.02	0.044
100	04814-10070	O RING	1				0.001	0.0022
110	16205-57510	SPRING RETURN	1				0.002	0.0044
120	16205-57740	COMP.LEVER STOP	1				0.046	0.1012
130	16264-57210	GASKET	1				0.002	0.0044
140	01023-50616	BOLT	1				0.005	0.011
150	16245-91540	STUD	2				0.005	0.011
160	02056-50060	NUT	2				0.002	0.0044
170	04512-60060	WASHER SPRING	2				0.001	0.0022
180	01053-50618	BOLT	1				0.006	0.0132
190	15601-96650	GASKET	1				0.001	0.0022

silverhorn.co.uk

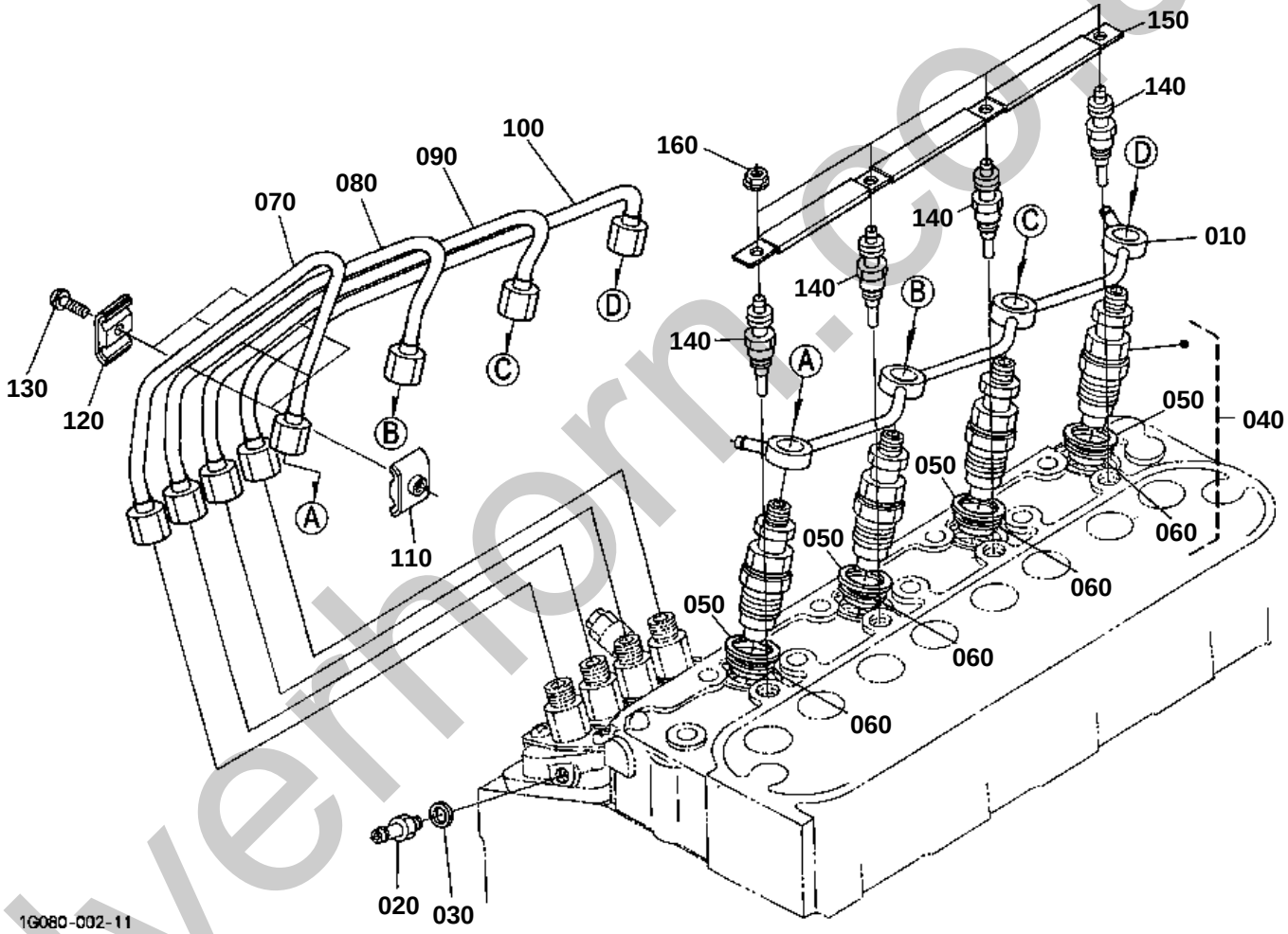

silverthorn.co.uk

NOZZLE HOLDER AND GLOW PLUG

↔ Interchangeable; ≠ not interchangeable; ← new for old; → old for new

REF.No	Part No.	Description	Q'ty	S.No.	I/C	REMARKS	Weight (kgf)	Weight (lb)
010	16271-42502	ASSY PIPE OVER FLOW	1				0.06	0.132
020	15841-51360	SCREW AIR BREEDER	1				0.008	0.0176
030	15601-96650	GASKET	1				0.001	0.0022
040	1G065-53900	KIT HOLDER NOZZLE	1				0.151	0.3322
050	15841-53622	GASKET	4				0.002	0.0044
060	19077-53650	SEAL HEAT	4				0.005	0.011
070	16271-53712	PIPE INJECTION	1				0.12	0.264
080	16271-53722	PIPE INJECTION	1				0.12	0.264
090	16271-53732	PIPE INJECTION	1				0.118	0.2596
100	16271-53742	PIPE INJECTION	1				0.12	0.264
110	15841-53850	CLAMP PIPE	3				0.01	0.022
120	15841-53860	CLAMP PIPE	3				0.009	0.0198
130	03024-50520	SCREW WITH WASHER	3				0.004	0.0088
140	16851-65510	GLOW PLUG	4				0.02	0.044
150	16271-65560	CORD GLOW PLUG	1				0.1	0.22
160	02761-50040	NUT FLANGE	4				0.002	0.0044

silverhorn.co.uk

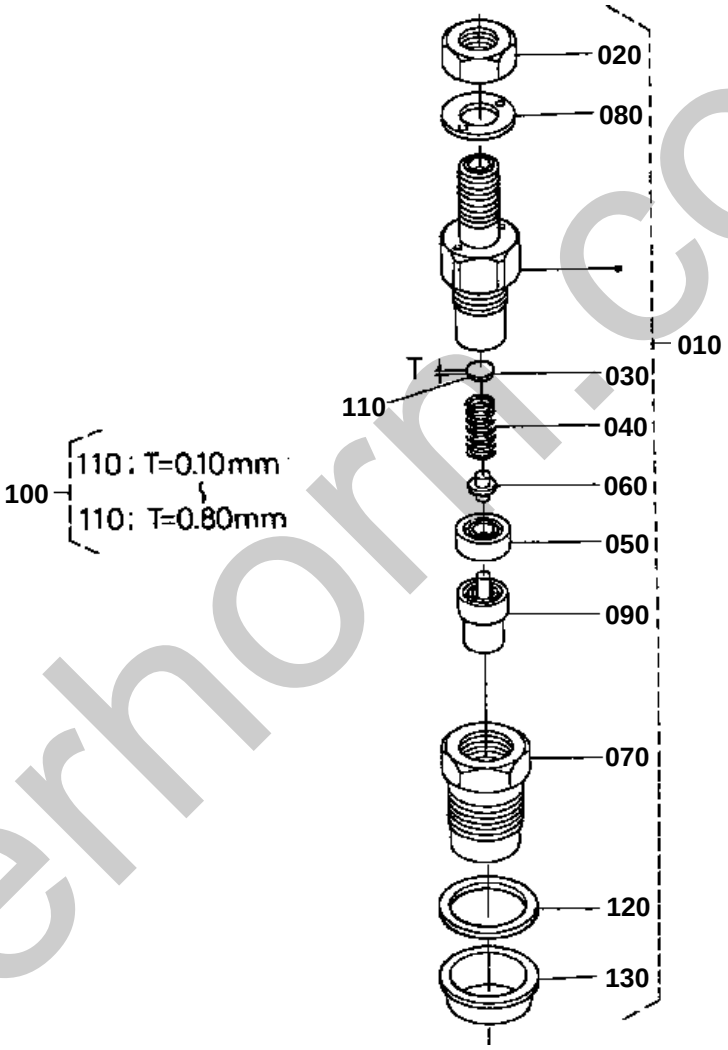

silverhorn.co.uk

NOZZLE HOLDER [COMPONENT PARTS]

↔ Interchangeable; ≠ not interchangeable; ← new for old; → old for new

REF.No	Part No.	Description	Q'ty	S.No.	I/C	REMARKS	Weight (kgf)	Weight (lb)
010	1G065-53900	KIT HOLDER NOZZLE	4				0.151	0.3322
020	16032-92030	NUT	4				0.007	0.0154
030	16032-53230	WASHER ADJUSTING	4				0.001	0.0022
040	16032-53170	SPRING NOZZLE	4				0.007	0.0154
050	16032-53350	SPACER DISTANCE	4				0.02	0.044
060	16032-53160	PUSH ROD	4				0.001	0.0022
070	16032-53280	NUT NOZZLE	4				0.037	0.0814
080	16032-94040	WASHER PLAIN	4				0.002	0.0044
090	1G065-53610	PIECE NOZZLE	4				0.02	0.044
100	16032-98100	ASSY WASHER ADJUST	4			OPTION	0.016	0.0352
110	16032-98500	WASHER ADJUSTING	4			0.10mm	0.001	0.0022
110	16032-98510	WASHER ADJUSTING	4			0.20mm	0.001	0.0022
110	16032-98520	WASHER ADJUSTING	4			0.30mm	0.001	0.0022
110	16032-98530	WASHER ADJUSTING	4			0.40mm	0.001	0.0022
110	16032-98540	WASHER ADJUSTING	4			0.50mm	0.001	0.0022
110	16032-98550	WASHER ADJUSTING	4			0.52mm	0.001	0.0022
110	16032-98560	WASHER ADJUSTING	4			0.54mm	0.001	0.0022
110	16032-98570	WASHER ADJUSTING	4			0.56mm	0.001	0.0022
110	16032-98580	WASHER ADJUSTING	4			0.58mm	0.001	0.0022
110	16032-98590	WASHER ADJUSTING	4			0.80mm	0.001	0.0022
120	15841-53622	GASKET	4				0.002	0.0044
130	19077-53650	SEAL HEAT	4				0.005	0.011

silverhorn.co.uk

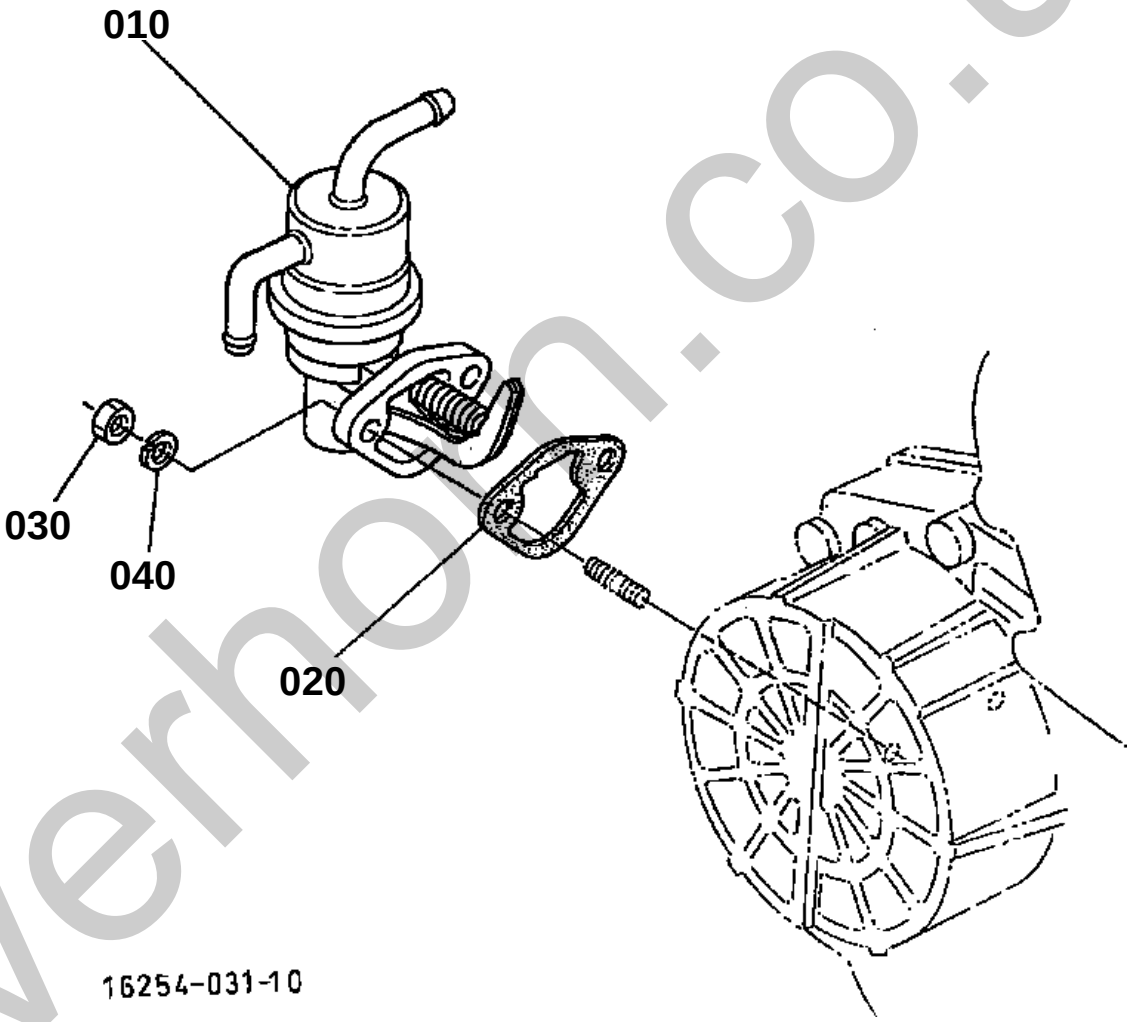

silverhorn.co.uk

FUEL PUMP(MECHANICAL)

↔ Interchangeable; ≠ not interchangeable; ← new for old; → old for new

REF.No	Part No.	Description	Q'ty	S.No.	I/C	REMARKS	Weight (kgf)	Weight (lb)
010	16241-52032	ASSY PUMP FUEL	1				0.13	0.286
020	16264-52140	GASKET FUEL PUMP	1				0.001	0.0022
030	02056-50060	NUT	2				0.002	0.0044
040	04512-60060	WASHER SPRING	2				0.001	0.0022

silverhorn.co.uk

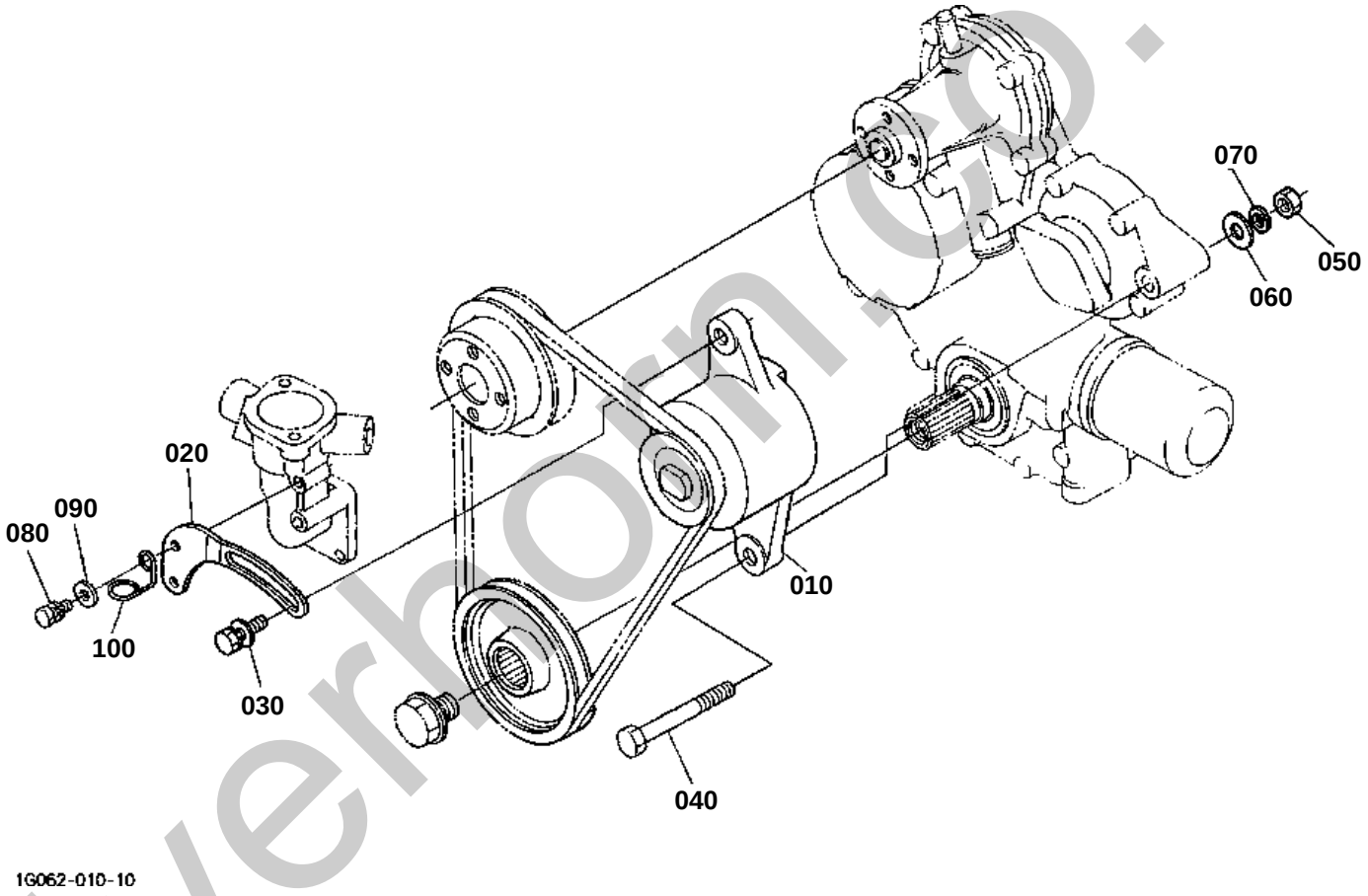

silverhorn.co.uk

DYNAMO

↔ Interchangeable; ≠ not interchangeable; ← new for old; → old for new

REF.No	Part No.	Description	Q'ty	S.No.	I/C	REMARKS	Weight (kgf)	Weight (lb)
010	6C040-59250	ASSY DYNAMO	1				1.33	2.926
020	16225-64420	STAY DYNAMO	1				0.084	0.1848
030	01127-50830	BOLT	1				0.023	0.0506
040	01153-50860	BOLT	1				0.024	0.0528
050	02112-50080	NUT	1				0.003	0.0066
060	04012-50080	WASHER PLAIN	1				0.001	0.0022
070	04512-60080	WASHER SPRING	1				0.002	0.0044
080	01023-50618	BOLT	1				0.006	0.0132
090	04012-50060	WASHER PLAIN	1				0.001	0.0022
100	16271-83370	CLAMP CORD	1				0.005	0.011

silverhorn.co.uk

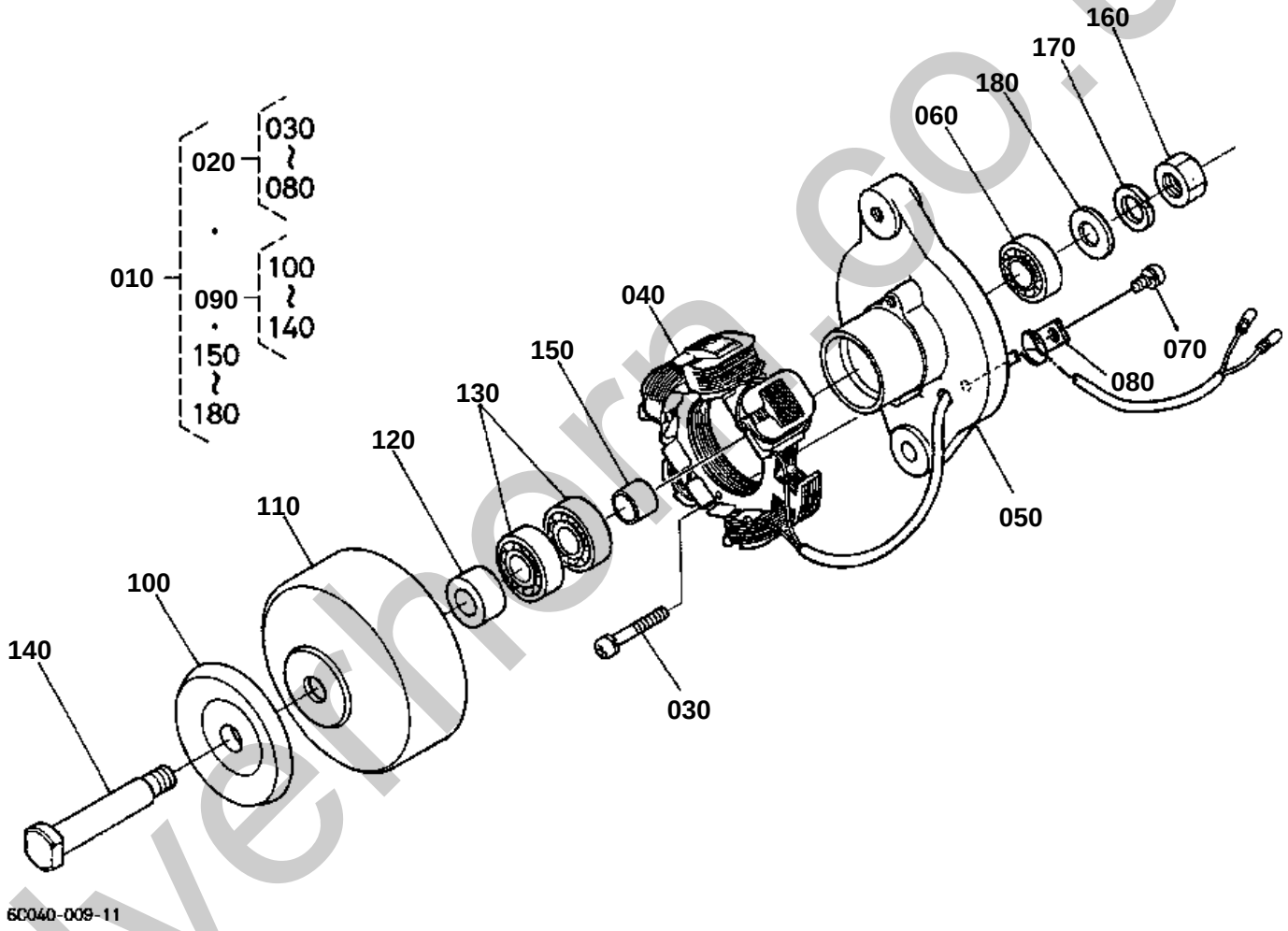

silverthorn.co.uk

↔ Interchangeable; ≠ not interchangeable; ← new for old; → old for new

REF.No	Part No.	Description	Q'ty	S.No.	I/C	REMARKS	Weight (kgf)	Weight (lb)
010	6C040-59250	ASSY DYNAMO	1				1.33	2.926
020	6C040-59260	COMP.STATOR	1				0.55	1.21
030	15261-93010	SCREW ROUND HEAD	2				0.003	0.0066
040	15531-64292	STATOR	1				0.29	0.638
050	6C040-82882	PLATE	1				0.267	0.5874
060	15531-74180	BEARING BALL	1				0.04	0.088
070	15531-93010	SCREW ROUND HEAD	1				0.002	0.0044
080	15261-64190	CLAMP CORD	1				0	0
090	6C040-59270	COMP.FLYWHEEL	1				0.75	1.65
100	15531-64110	PULLEY	1				0.15	0.33
110	6C040-82850	FLYWHEEL DYNAMO	1				0.48	1.056
120	6C040-82860	COLLAR	1				0.014	0.0308
130	15531-74180	BEARING BALL	2				0.04	0.088
140	6C040-82870	SHAFT FAN	1				0.075	0.165
150	15261-64150	COLLAR	1				0.02	0.044
160	15261-92030	NUT FLANGE	1				0.01	0.022
170	15261-94070	WASHER SPRING	1				0.003	0.0066
180	15261-94020	WASHER PLAIN	1				0.007	0.0154

silverhorn.co.uk

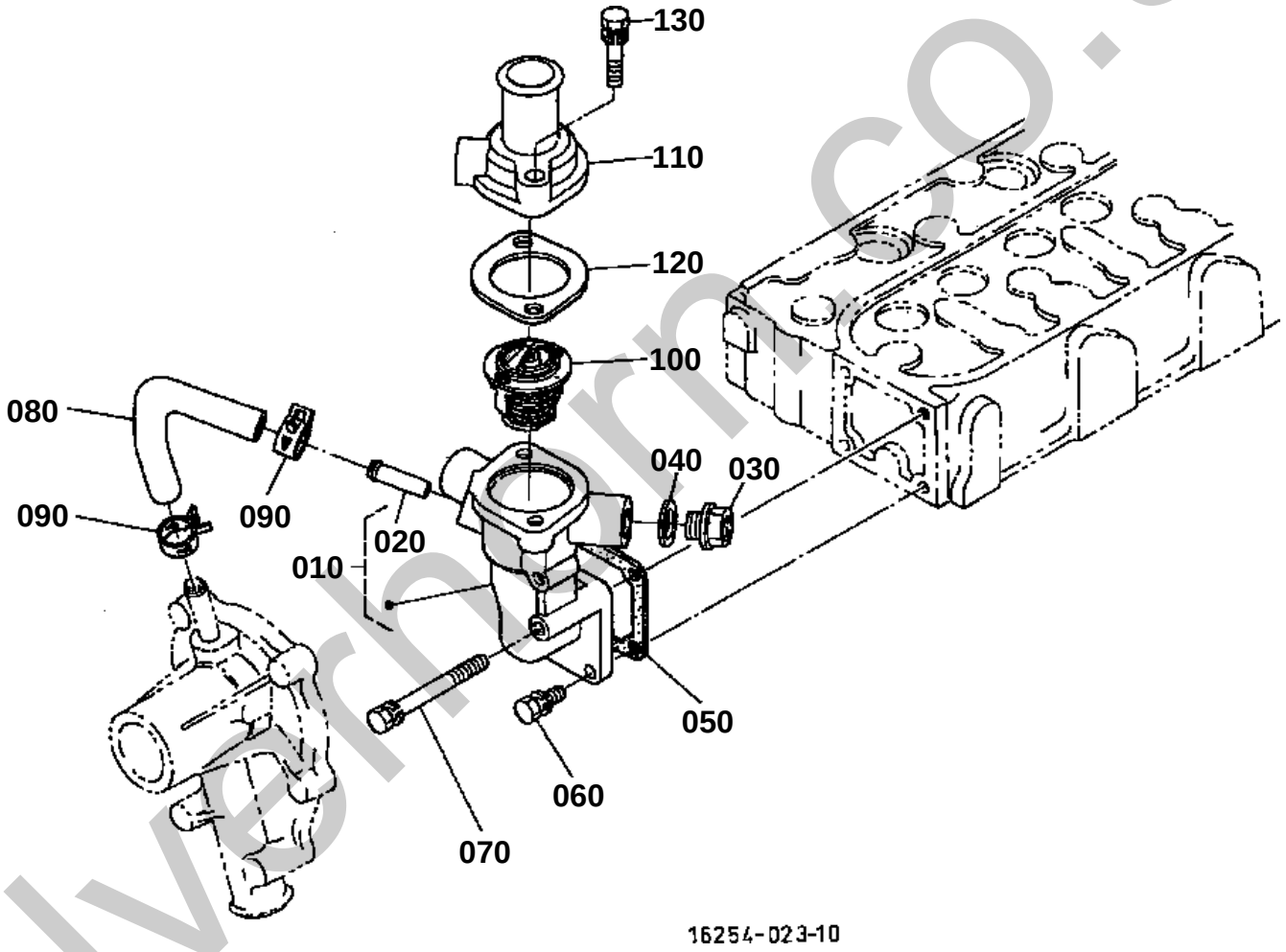

silverhorn.co.uk

WATER FLANGE AND THERMOSTAT

↔ Interchangeable; ≠ not interchangeable; ← new for old; → old for new

REF.No	Part No.	Description	Q'ty	S.No.	I/C	REMARKS	Weight (kgf)	Weight (lb)
010	16180-72700	COMP.FLANGE WATER	1				0.265	0.583
020	16241-73370	PIPE WATER RETURN	1				0.007	0.0154
030	06311-55030	PLUG	1				0.05	0.11
040	16261-96710	GASKET	1				0.002	0.0044
050	16264-72920	GASKET WATER FLANGE	1				0.001	0.0022
060	01023-50616	BOLT	3				0.005	0.011
070	01023-50655	BOLT	1				0.012	0.0264
080	16241-73350	PIPE WATER RETURN	1				0.015	0.033
090	16241-73360	BAND PIPE	2				0.003	0.0066
100	15321-73014	ASSY THERMOSTAT	1				0.07	0.154
110	16219-73260	COVER THERMOSTAT	1				0.094	0.2068
120	16221-73270	GASKET THERMOSTAT	1				0.01	0.022
130	01123-50835	BOLT	2				0.02	0.044

silverhorn.co.uk

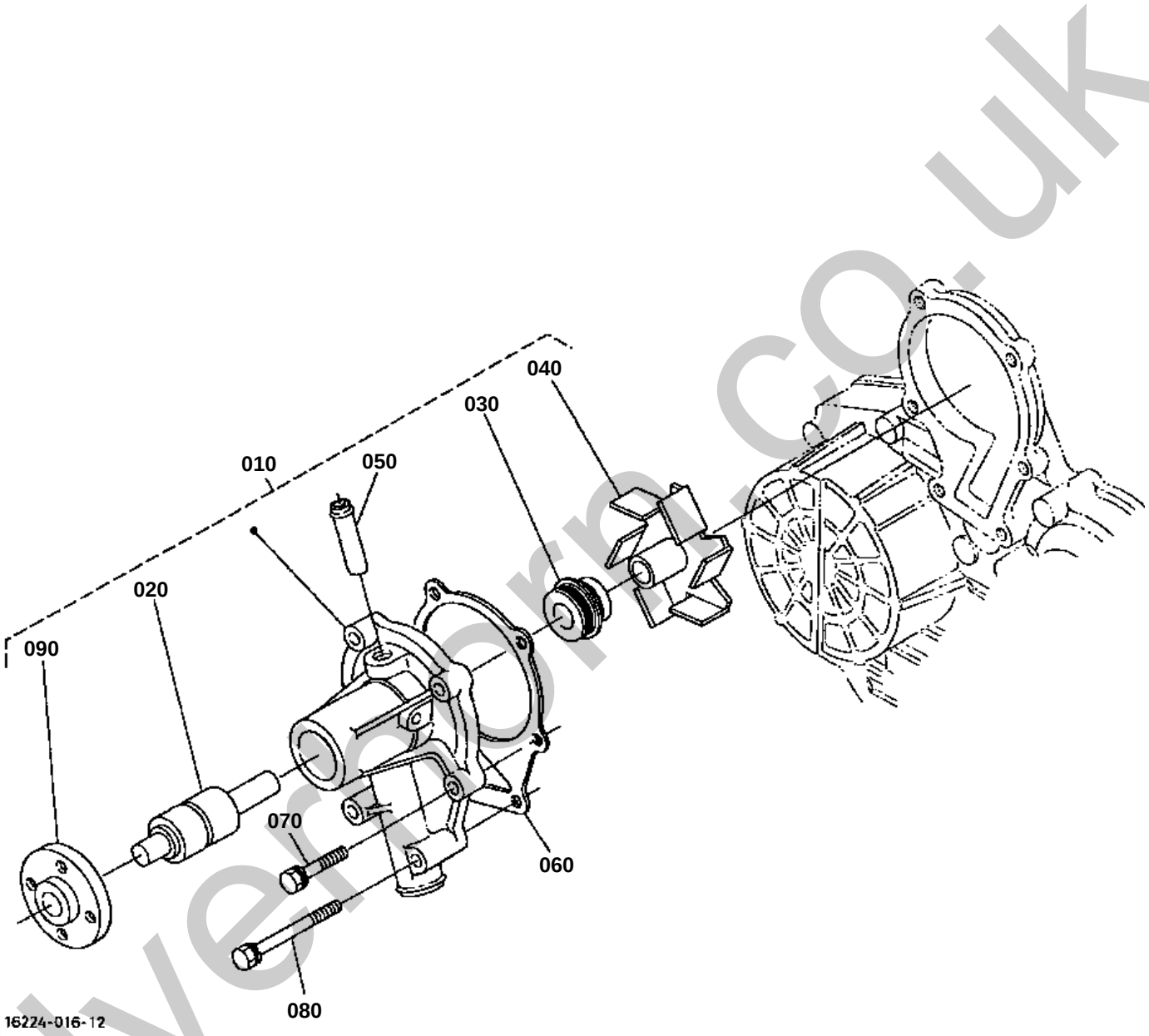

silvermorr.co.uk

WATER PUMP

↔ Interchangeable; ≠ not interchangeable; ← new for old; → old for new

REF.No	Part No.	Description	Q'ty	S.No.	I/C	REMARKS	Weight (kgf)	Weight (lb)
010	16251-73034	ASSY PUMP WATER	1				0.8	1.76
020	16259-73552	BEARING	1				0.21	0.462
030	1G642-73050	ASSY SEAL MECHANICAL	1				0.03	0.066
040	16259-73512	IMPELLER WATER PUMP	1				0.09	0.198
050	16241-73340	PIPE WATER RETURN	1				0.006	0.0132
060	16239-73430	GASKET WATER PUMP	1				0.007	0.0154
070	01023-50630	BOLT	4				0.008	0.0176
080	01023-50685	BOLT	2				0.018	0.0396
090	16259-73520	FLANGE WATER PUMP	1				0.15	0.33

silverhorn.co.uk

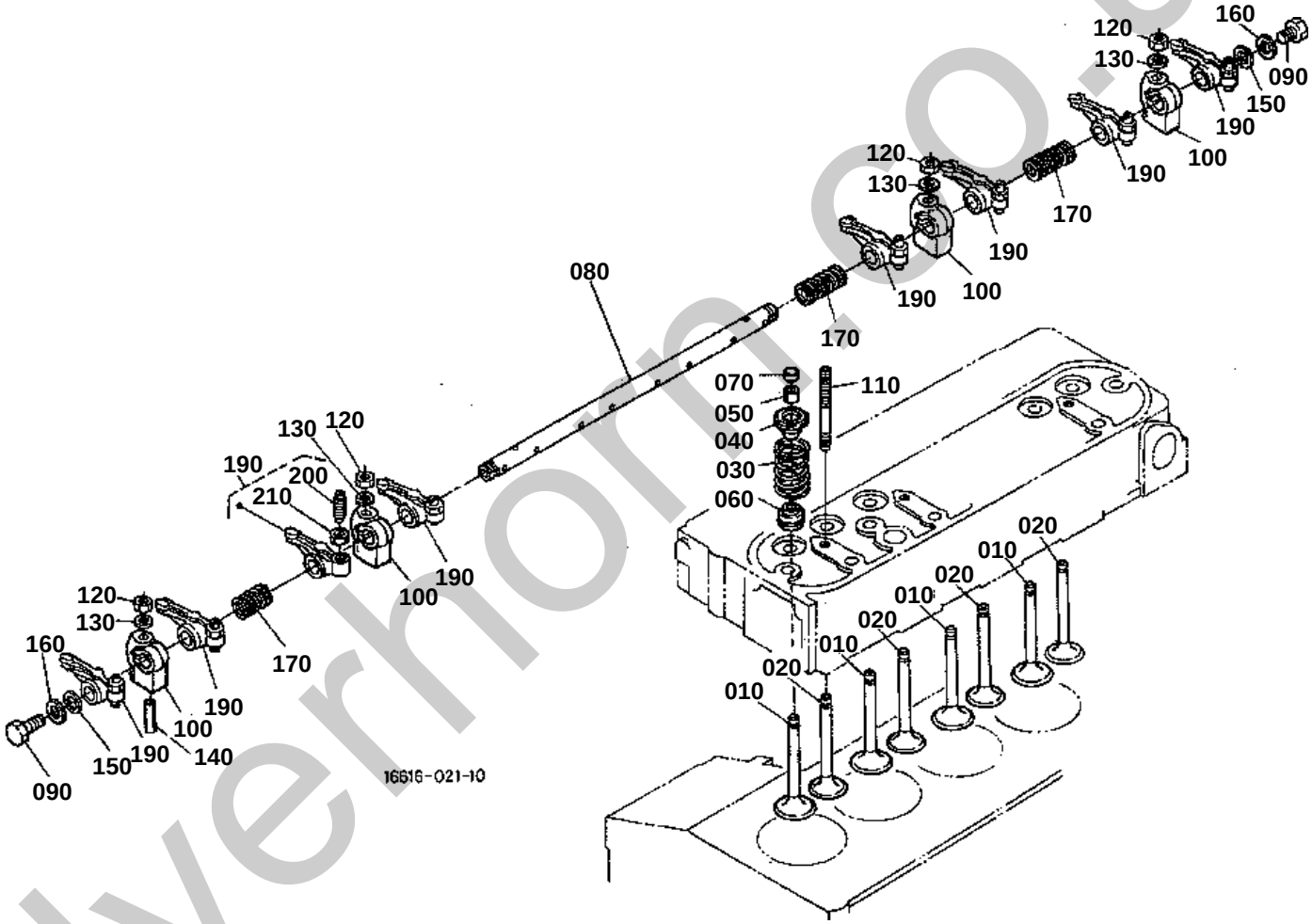

silverhorn.co.uk

VALVE AND ROCKER ARM

↔ Interchangeable; ≠ not interchangeable; ← new for old; → old for new

REF.No	Part No.	Description	Q'ty	S.No.	I/C	REMARKS	Weight (kgf)	Weight (lb)
010	16241-13110	VALVE INLET	4				0.05	0.11
020	16241-13120	VALVE EXHAUST	4				0.045	0.099
030	16271-13240	SPRING VALVE	8				0.015	0.033
040	16261-13330	RETAINER SPRING	8				0.016	0.0352
050	15261-13360	COLLET VALVE SPRING	8			SET	0.001	0.0022
060	1C010-13150	SEAL VALVE STEM	8				0.002	0.0044
070	16241-13280	CAP VALVE	8				0.005	0.011
080	16241-14264	SHAFT ROCKER ARM	1				0.22	0.484
090	01023-50610	BOLT	2				0.005	0.011
100	16241-14350	BRACKET ROCKER ARM	4				0.04	0.088
110	16241-14410	STUD	4				0.022	0.0484
120	15261-92010	NUT	4				0.005	0.011
130	15261-94010	WASHER PLAIN	4				0.002	0.0044
140	05411-00428	PIN SPRING	1				0.002	0.0044
150	16241-14430	WASHER R-ARM.SHAFT	2				0.002	0.0044
160	15841-94022	WASHER PLAIN	2				0.005	0.011
170	16241-14310	SPRING ROCKER ARM	3				0.004	0.0088
180	99999-99999	BLANK	0				0	0
190	16241-14032	ASSY ROCKER ARM	8				0.052	0.1144
200	16241-14230	SCREW ADJUSTING	8				0.008	0.0176
210	16241-14240	NUT	8				0.004	0.0088

silverhorn.co.uk

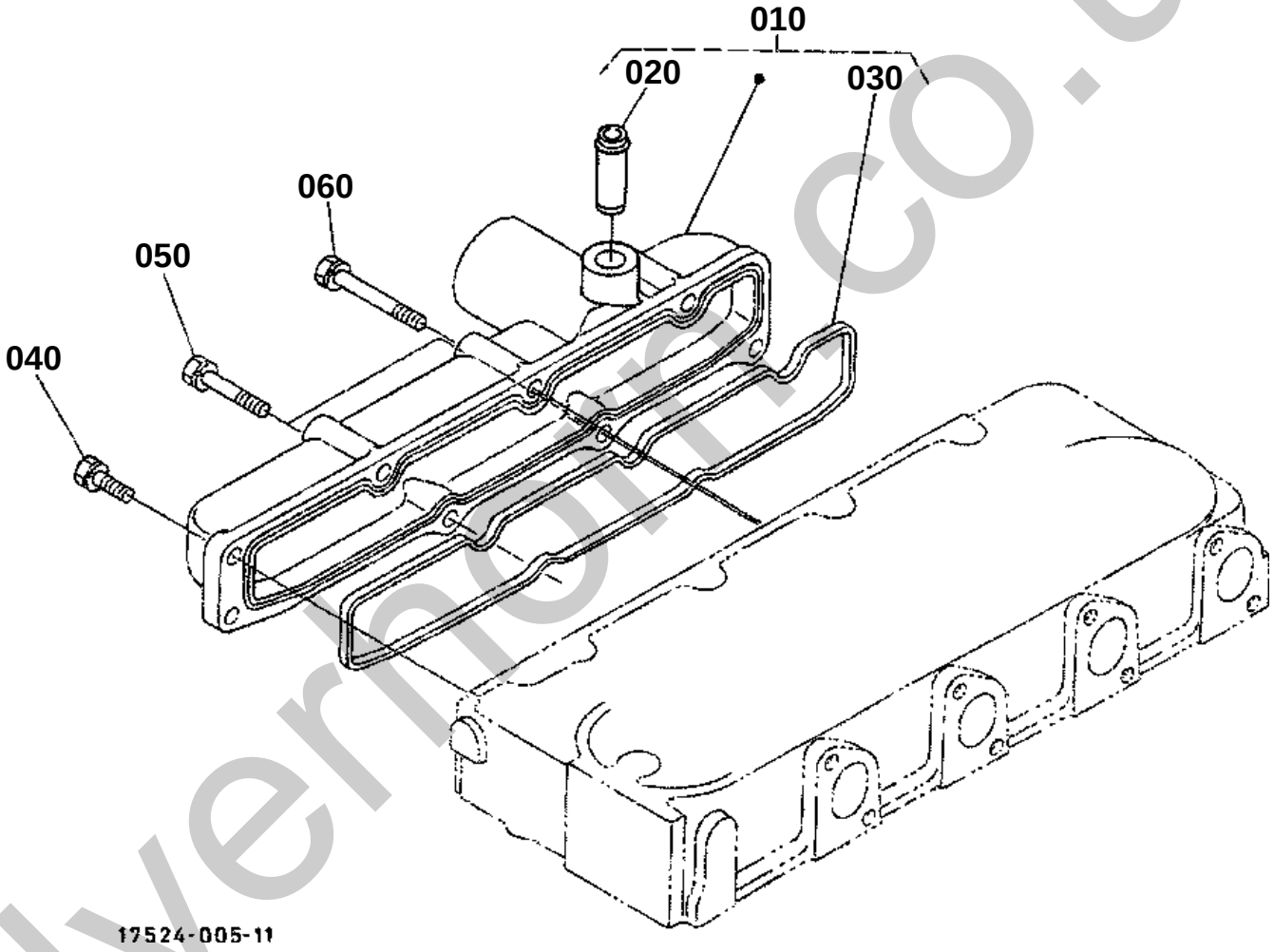

silvermoll.co.uk

INLET MANIFOLD

↔ Interchangeable; ≠ not interchangeable; ← new for old; → old for new

REF.No	Part No.	Description	Q'ty	S.No.	I/C	REMARKS	Weight (kgf)	Weight (lb)
010	16259-11772	ASSY MANIFOLD INLET	1				0.4	0.88
020	16241-05550	JOINT BREATHER PIPE	1				0.02	0.044
030	16241-11820	GASKET IN-MANIFOLD	1				0.01	0.022
040	01023-50618	BOLT	3				0.006	0.0132
050	01023-50630	BOLT	2				0.008	0.0176
060	01023-60650	BOLT	3				0.015	0.033

silverhorn.co.uk

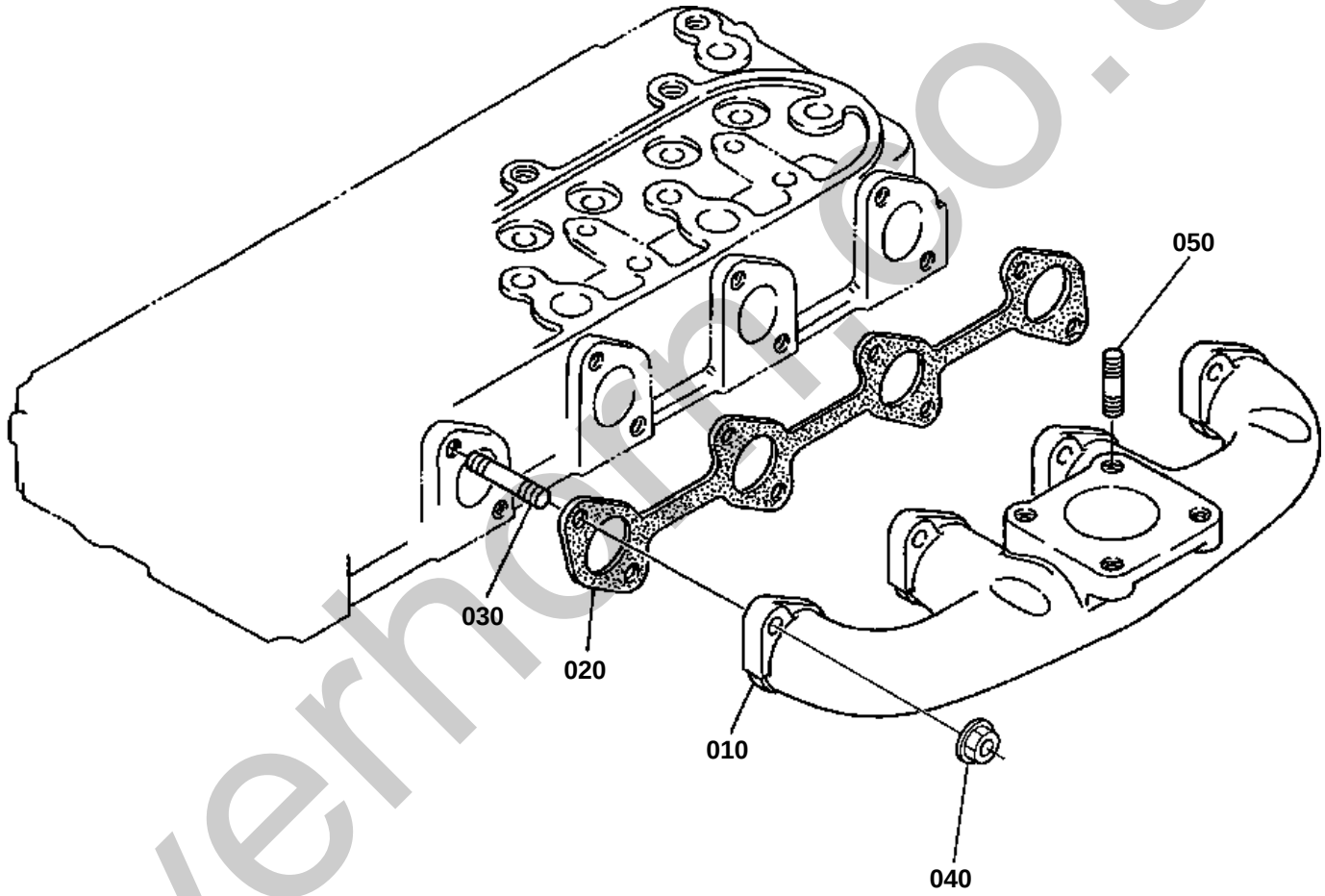

1G072-005-11

silverhofnco.uk

EXHAUST MANIFOLD

↔ Interchangeable; ≠ not interchangeable; ← new for old; → old for new

REF.No	Part No.	Description	Q'ty	S.No.	I/C	REMARKS	Weight (kgf)	Weight (lb)
010	16285-12310	MANIFOLD EXHAUST	1				2.1	4.62
020	16299-12360	GASKET EX-MANIFOLD	1				0.02	0.044
030	16241-91490	STUD	8				0.005	0.011
040	16271-92010	NUT	8				0.005	0.011
050	01513-50818	STUD	4				0.009	0.0198

silverhorn.co.uk

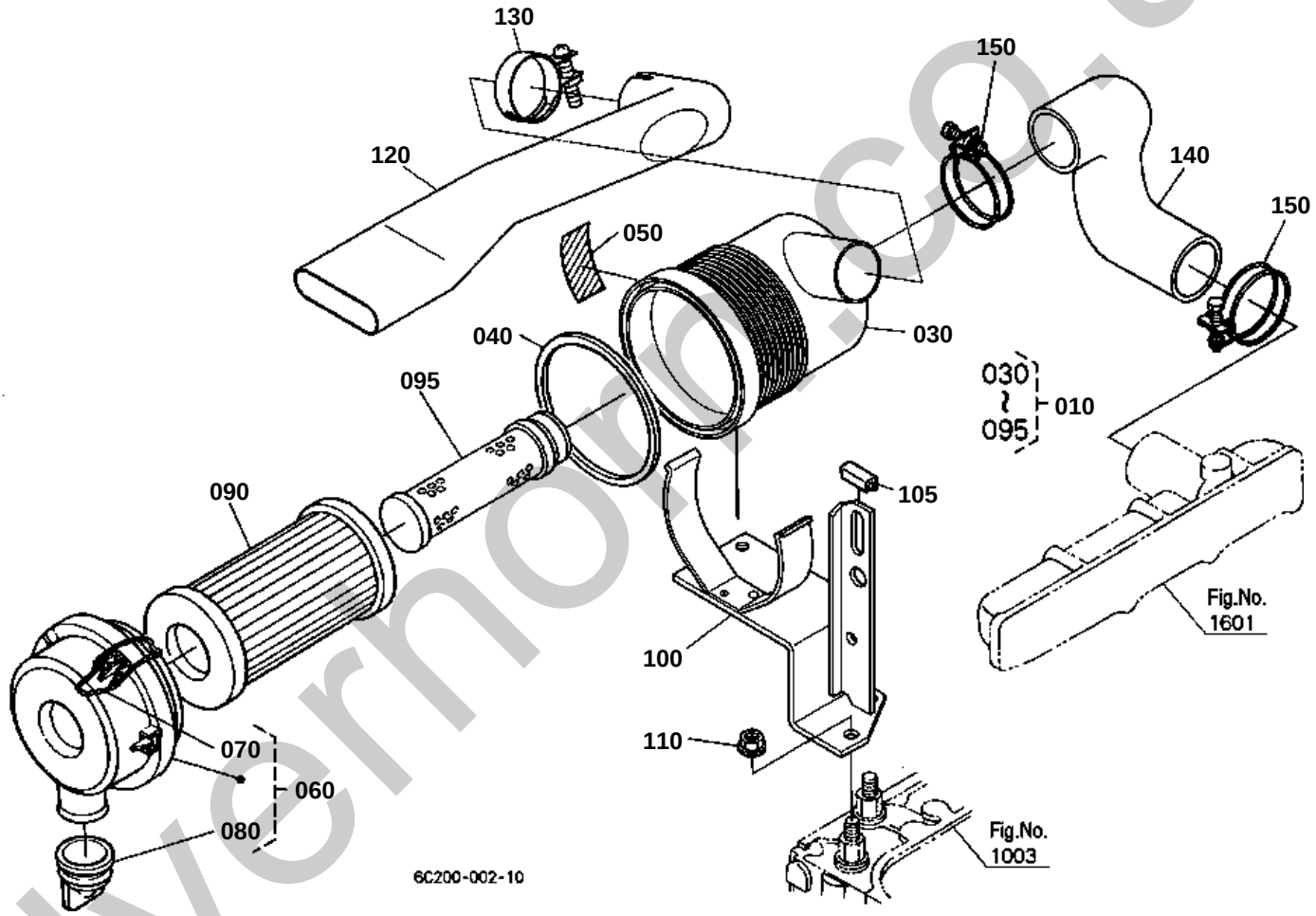

silverhorse.co.uk

↔ Interchangeable; ≠ not interchangeable; ← new for old; → old for new

REF.No	Part No.	Description	Q'ty	S.No.	I/C	REMARKS	Weight (kgf)	Weight (lb)
010	6C095-58200	ASSY CLEANER AIR	1				0.66	1.452
020	99999-99999	BLANK	0				0	0
030	6A100-82520	BODY AIR CLEANER	1				0.23	0.506
040	6A100-82530	GASKET	1				0.03	0.066
050	32721-58282	LABEL CAUTION	1				0.001	0.0022
060	6A100-82550	ASSY COVER A/C	1				0.179	0.3938
070	6A100-82570	SPRING	2				0.005	0.011
080	67980-82580	VALVE UNLOADER	1				0.011	0.0242
090	6C060-99410	ASSY ELEMENT	1				0.3	0.66
095	32721-58242	ELEMENT INNER	1				0.1	0.22
100	6C070-58233	BRACKET AIR CLEANER	1				0.64	1.408
105	6C070-58240	CUSHION	1				0.001	0.0022
110	02783-50100	NUT FLANGE	2				0.01	0.022
120	6C200-58250	HOSE INLET	1				0	0
130	15261-11720	BAND PIPE	1				0.03	0.066
140	6C220-58260	HOSE INLET	1				0	0
150	67955-58260	BAND AIR CLEANER	2				0.028	0.0616

silverhorn.co.uk

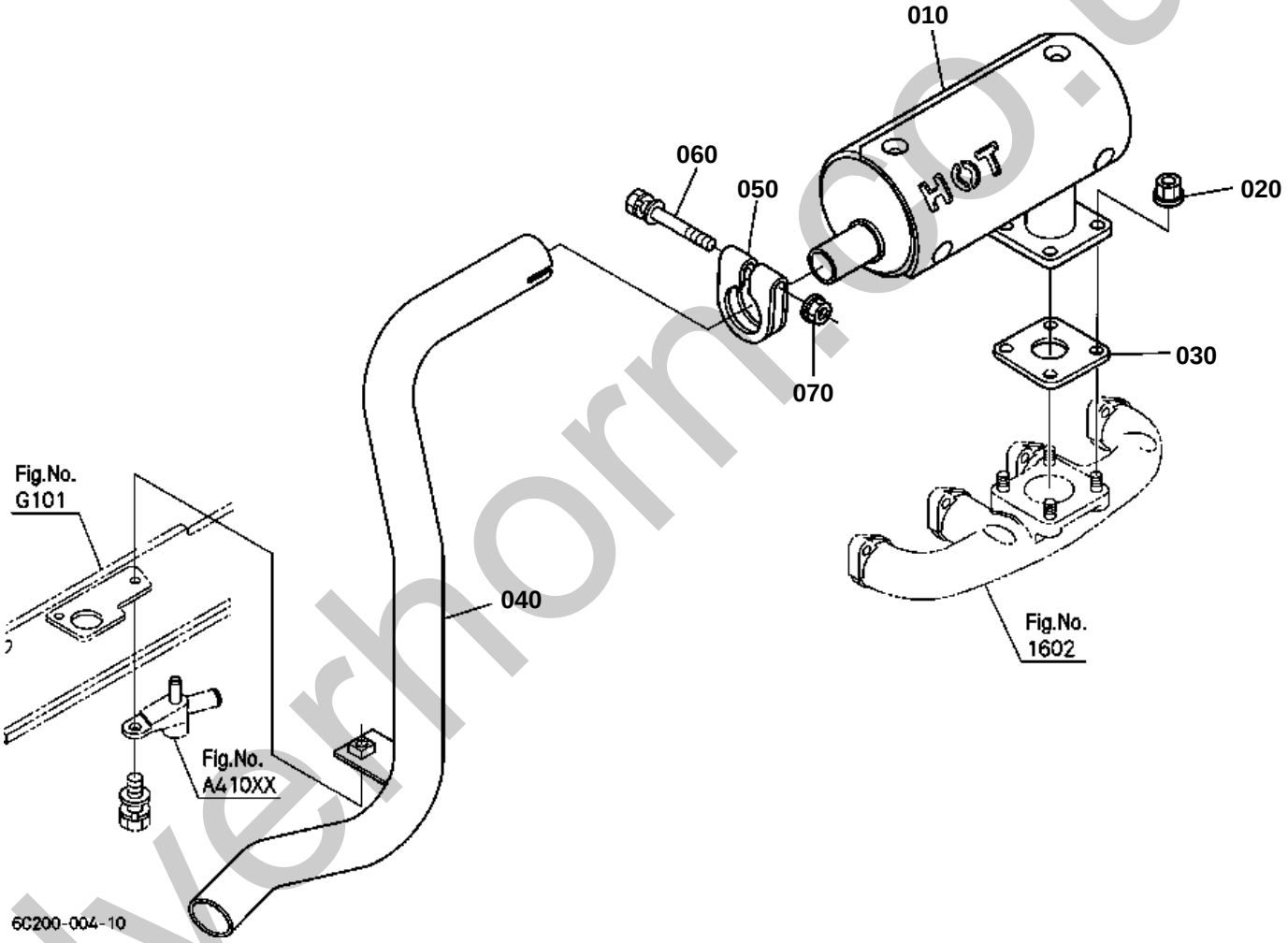

silverhorn.co.uk

MUFFLER

↔ Interchangeable; ≠ not interchangeable; ← new for old; → old for new

REF.No	Part No.	Description	Q'ty	S.No.	I/C	REMARKS	Weight (kgf)	Weight (lb)
010	6A320-58403	COMP.MUFFLER	1				1.97	4.334
020	02121-50080	NUT	4				0.01	0.022
030	15263-12370	GASKET MUFFLER NA	1				0.015	0.033
040	6C220-58423	PIPE EXHAUST	1				0	0
050	15221-12433	CLAMP MUFFLER PIPE	1				0.05	0.11
060	01125-50855	BOLT	1				0.025	0.055
070	02121-50080	NUT	1				0.01	0.022

silverhorn.co.uk

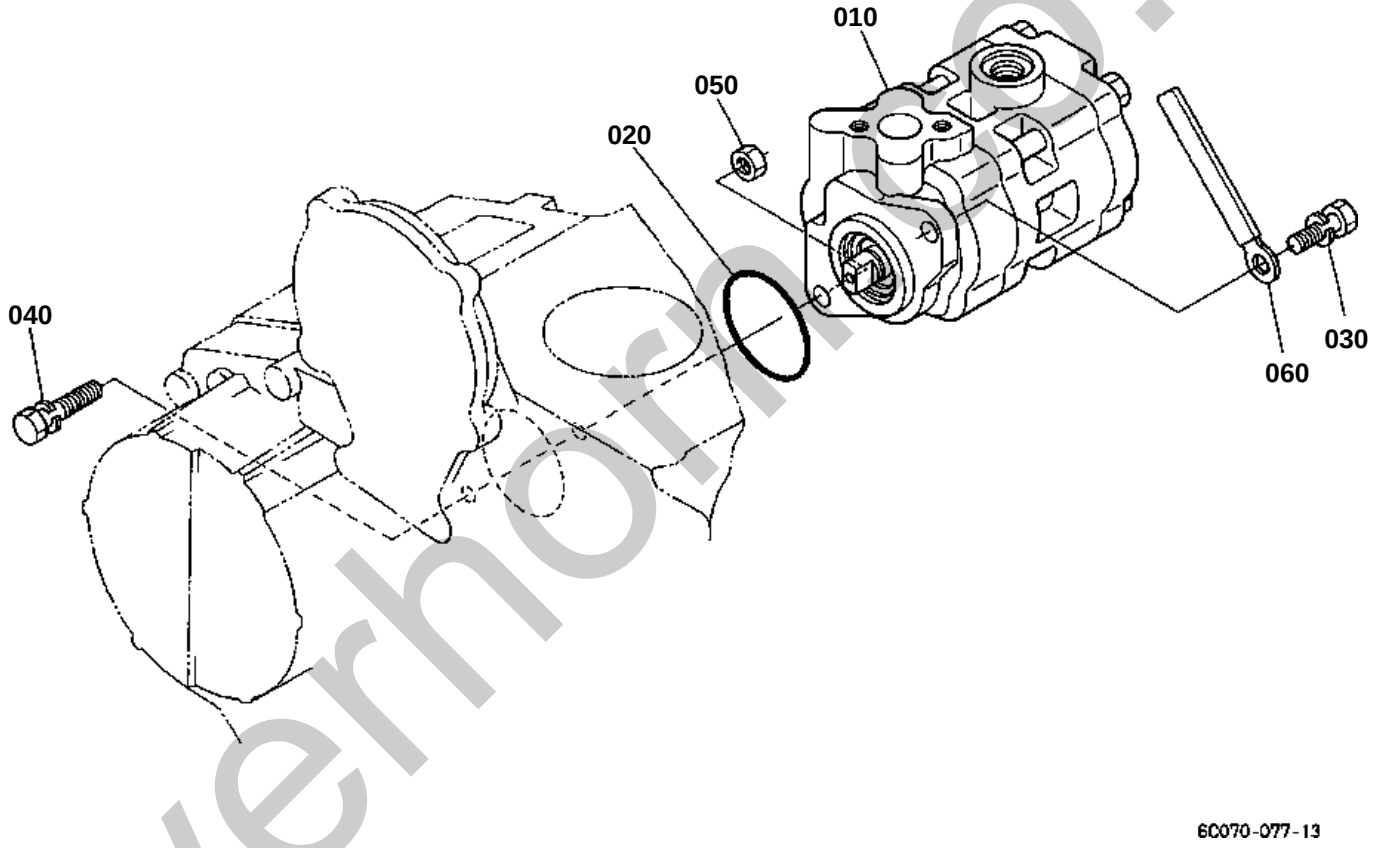

silverhorse.uk

↔ Interchangeable; ≠ not interchangeable; ← new for old; → old for new

REF.No	Part No.	Description	Q'ty	S.No.	I/C	REMARKS	Weight (kgf)	Weight (lb)
010	6C200-37300	ASSY PUMP HYDRAULIC	1				2.23	4.906
020	04811-10460	O RING	1				0.002	0.0044
030	01123-50825	BOLT	1				0.013	0.0286
040	01123-50835	BOLT	1				0.02	0.044
050	02056-50080	NUT	1				0.005	0.011
060	13824-67590	CLAMP CORD	1				0.002	0.0044

silverhorn.co.uk

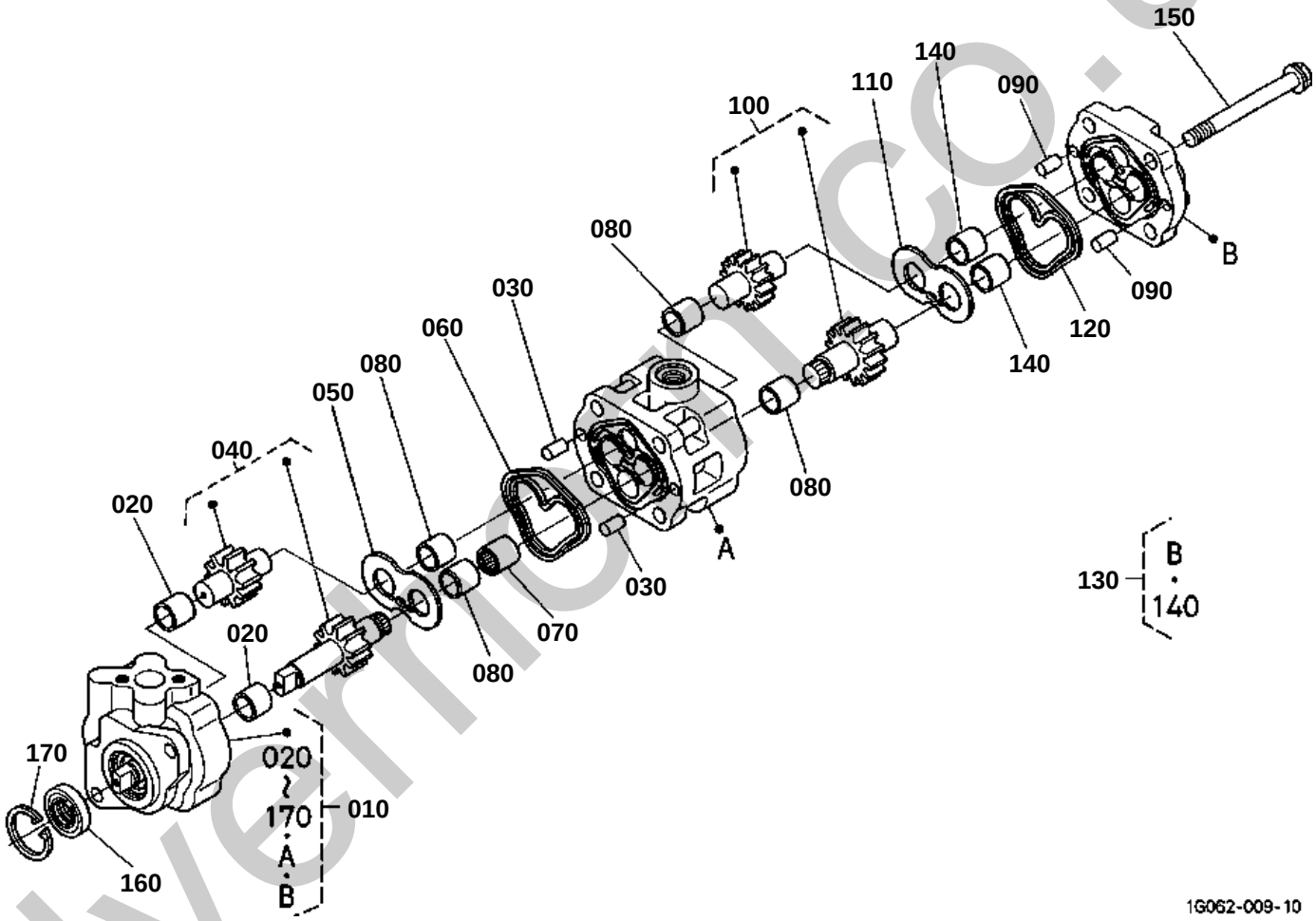

silvermoon.co.uk

HYDRAULIC PUMP [COMPONENT PARTS]

↔ Interchangeable; ≠ not interchangeable; ← new for old; → old for new

REF.No	Part No.	Description	Q'ty	S.No.	I/C	REMARKS	Weight (kgf)	Weight (lb)
010	6C200-37300	ASSY PUMP HYDRAULIC	1				2.23	4.906
020	6A100-37232	BUSH	2				0.005	0.011
030	05012-00814	PIN STRAIGHT	2				0.006	0.0132
040	6A100-37342	COMP.GEAR HYD.PUMP	1				0.27	0.594
050	6C140-36350	PLATE SIDE	1				0.05	0.11
060	6C040-36344	RING DOUBLE	1				0.003	0.0066
070	6A100-37430	COUPLING	1				0.01	0.022
080	6A100-37232	BUSH	4				0.005	0.011
090	05012-00814	PIN STRAIGHT	2				0.006	0.0132
100	T1060-36550	COMP.GEAR HYD.PUMP	1				0.2	0.44
110	6C140-36350	PLATE SIDE	1				0.05	0.11
120	6C040-36344	RING DOUBLE	1				0.003	0.0066
130	6C140-37400	COMP.COVER	1				0.23	0.506
140	6A100-37232	BUSH	2				0.005	0.011
150	01754-51090	BOLT FLANGE	4				0.05	0.11
160	31381-76390	SEAL OIL	1				0.01	0.022
170	04611-00300	CIR CLIP INTERNAL	1				0.004	0.0088

silverhorn.co.uk

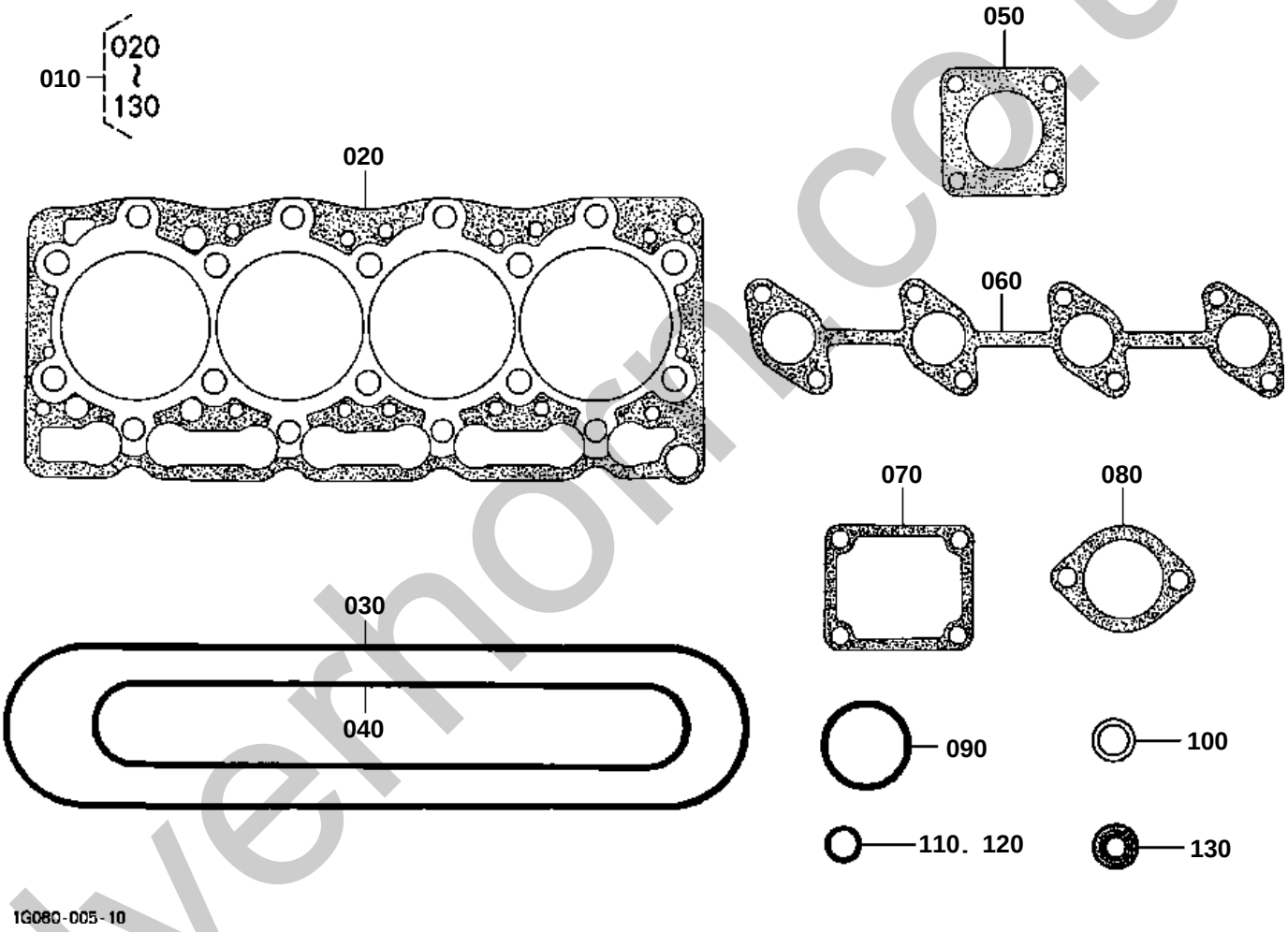

silvernorn.co.uk

UPPER GASKET KIT

↔ Interchangeable; ≠ not interchangeable; ← new for old; → old for new

REF.No	Part No.	Description	Q'ty	S.No.	I/C	REMARKS	Weight (kgf)	Weight (lb)
010	1G089-99350	KIT GASKET UPPER	1				0.379	0.8338
020	16394-03310	GASKET CYLINDER HEAD	1				0.2	0.44
030	16241-14520	GASKET HEAD COVER	1				0.012	0.0264
040	16241-11820	GASKET IN-MANIFOLD	1				0.01	0.022
050	15263-12370	GASKET MUFFLER NA	1				0.015	0.033
060	16299-12360	GASKET EX-MANIFOLD	1				0.02	0.044
070	16264-72920	GASKET WATER FLANGE	1				0.001	0.0022
080	16221-73270	GASKET THERMOSTAT	1				0.01	0.022
090	04814-50300	O RING	1				0.001	0.0022
100	15951-96660	GASKET	4				0.001	0.0022
110	04724-00100	GASKET	1				0.001	0.0022
120	04724-00120	GASKET	1				0.002	0.0044
130	1C010-13150	SEAL VALVE STEM	8				0.002	0.0044

silverhorn.co.uk

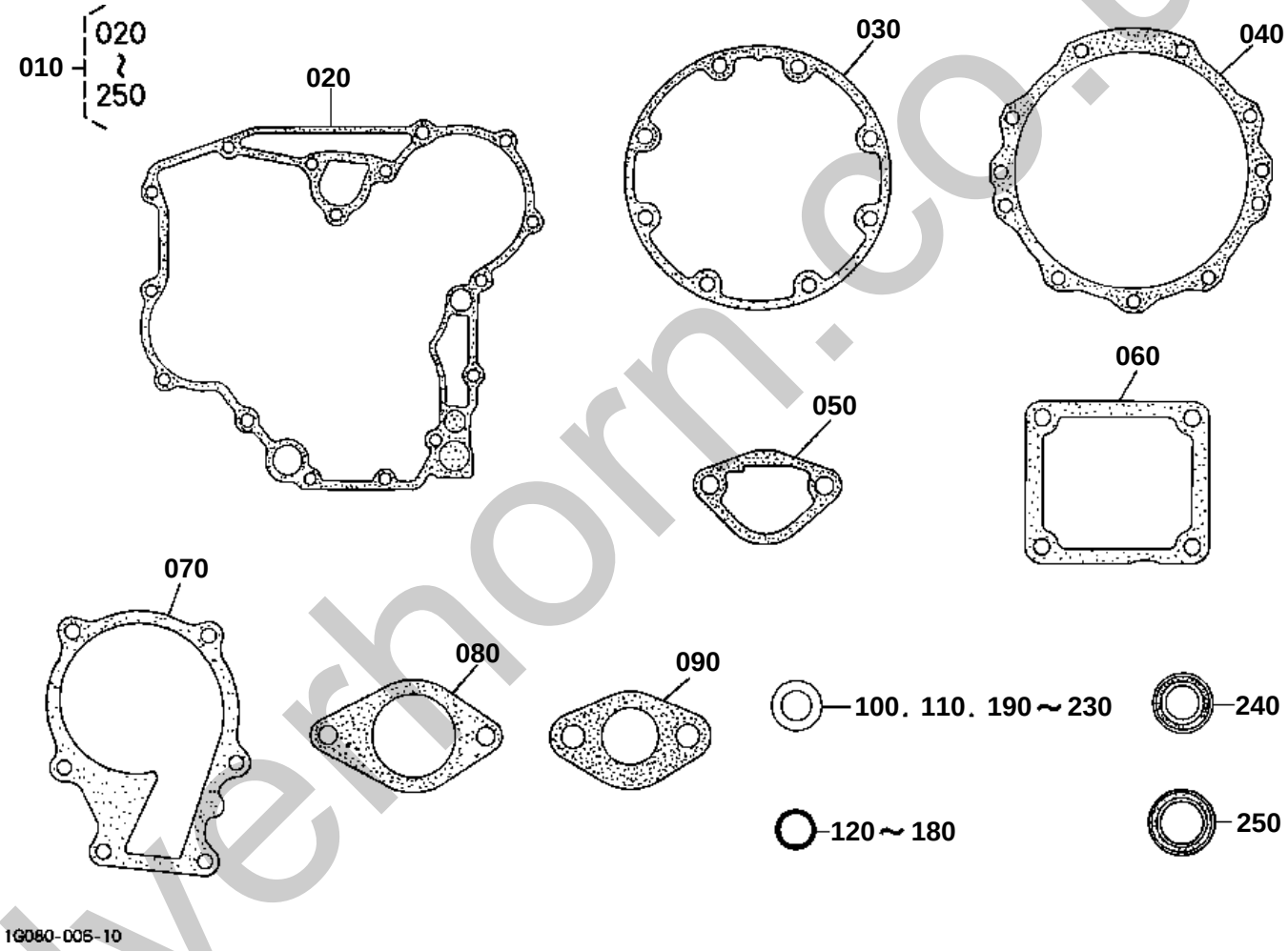

silverhorn.co.uk

LOWER GASKET KIT

↔ Interchangeable; ≠ not interchangeable; ← new for old; → old for new

REF.No	Part No.	Description	Q'ty	S.No.	I/C	REMARKS	Weight (kgf)	Weight (lb)
010	1G089-99360	KIT GASKET LOWER	1				0.204	0.4488
020	16264-04130	GASKET GEAR CASE	1				0.01	0.022
030	16264-04360	GASKET BRG.CASE	1				0.002	0.0044
040	16264-04820	GASKET	1				0.008	0.0176
050	16264-52140	GASKET FUEL PUMP	1				0.001	0.0022
060	16264-57210	GASKET	1				0.002	0.0044
070	16239-73430	GASKET WATER PUMP	1				0.007	0.0154
080	16264-88130	GASKET H/METER UNIT	1				0.002	0.0044
090	16299-56260	GASKET	1				0.002	0.0044
100	15021-33660	GASKET	1				0.001	0.0022
110	04724-00130	GASKET	1			OUT OF USE	0.003	0.0066
120	04814-50600	O RING	1			OUT OF USE	0.002	0.0044
130	04814-10070	O RING	1				0.001	0.0022
140	04814-06100	O RING	2			OUT OF USE	0.003	0.0066
150	04814-00100	O RING	1				0.001	0.0022
160	04814-00150	O RING	2			OUT OF USE	0.001	0.0022
170	04814-10280	RING	1				0.001	0.0022
180	04814-00160	O RING	1				0.001	0.0022
190	15601-96650	GASKET	5				0.001	0.0022
200	15841-96650	GASKET	2				0.001	0.0022
210	15471-96650	GASKET	2				0.002	0.0044
220	15841-96660	GASKET	1			OUT OF USE	0.001	0.0022
230	15841-53622	GASKET	4				0.002	0.0044
240	16241-04212	SEAL OIL	1				0.012	0.0264
250	16271-04460	SEAL OIL	1				0.04	0.088

silverhorn.co.uk

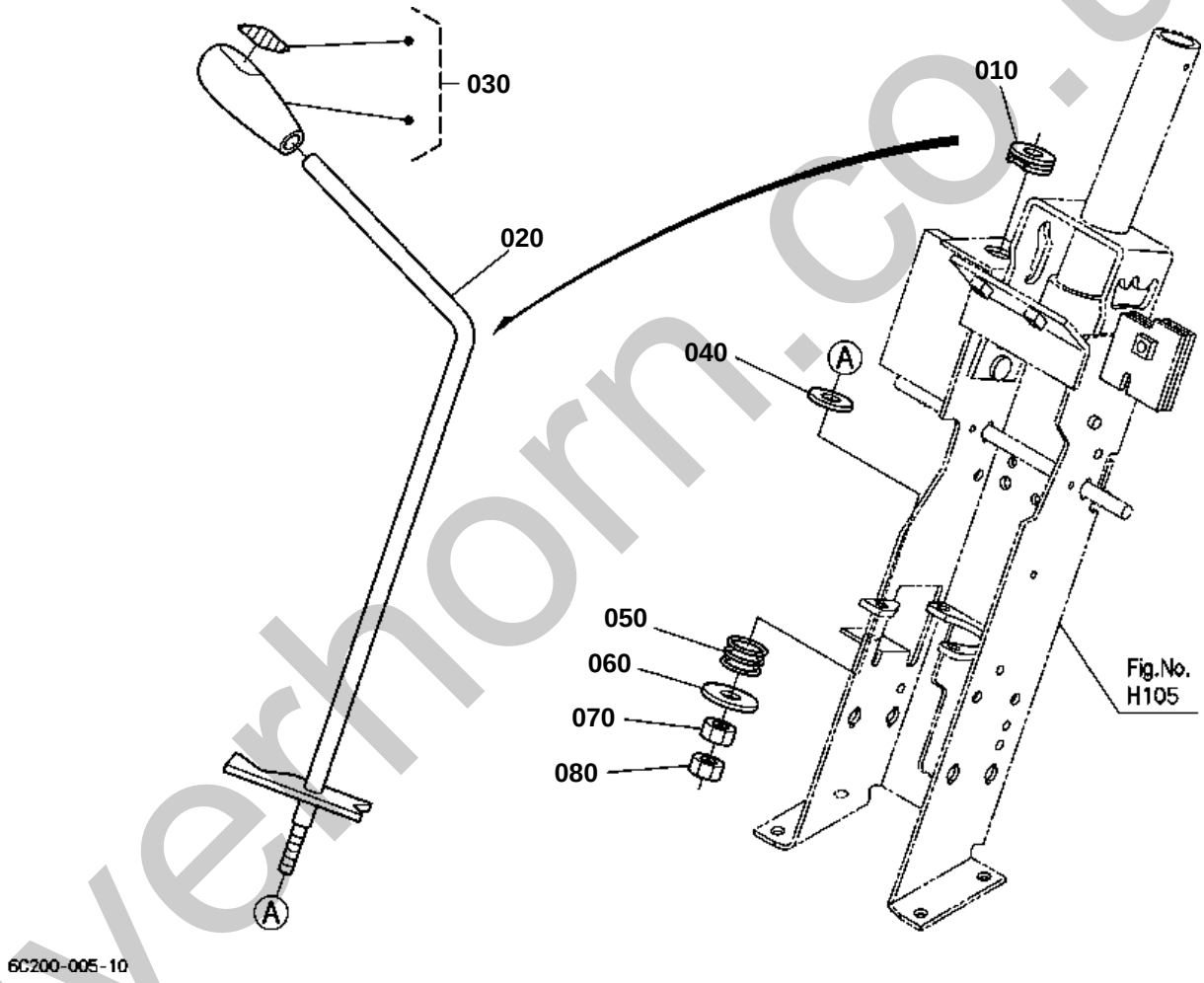

silverhorn.co.uk

ACCELERATOR LEVER

↔ Interchangeable; ≠ not interchangeable; ← new for old; → old for new

REF.No	Part No.	Description	Q'ty	S.No.	I/C	REMARKS	Weight (kgf)	Weight (lb)
010	6A700-43330	GROMMET	1				0.005	0.011
020	6A700-43312	LEVER ACCEL.	1				0.5	1.1
030	6A700-43323	GRIP ACCEL.LEVER	1				0.05	0.11
040	PA401-46640	PLATE FRICTION	1				0.025	0.055
050	33251-10320	SPRING ACCEL.LEVER	1				0.012	0.0264
060	04015-60120	WASHER PLAIN	1				0.022	0.0484
070	02131-50100	NUT	1				0.01	0.022
080	02118-50100	NUT	1				0.005	0.011

silverhorn.co.uk

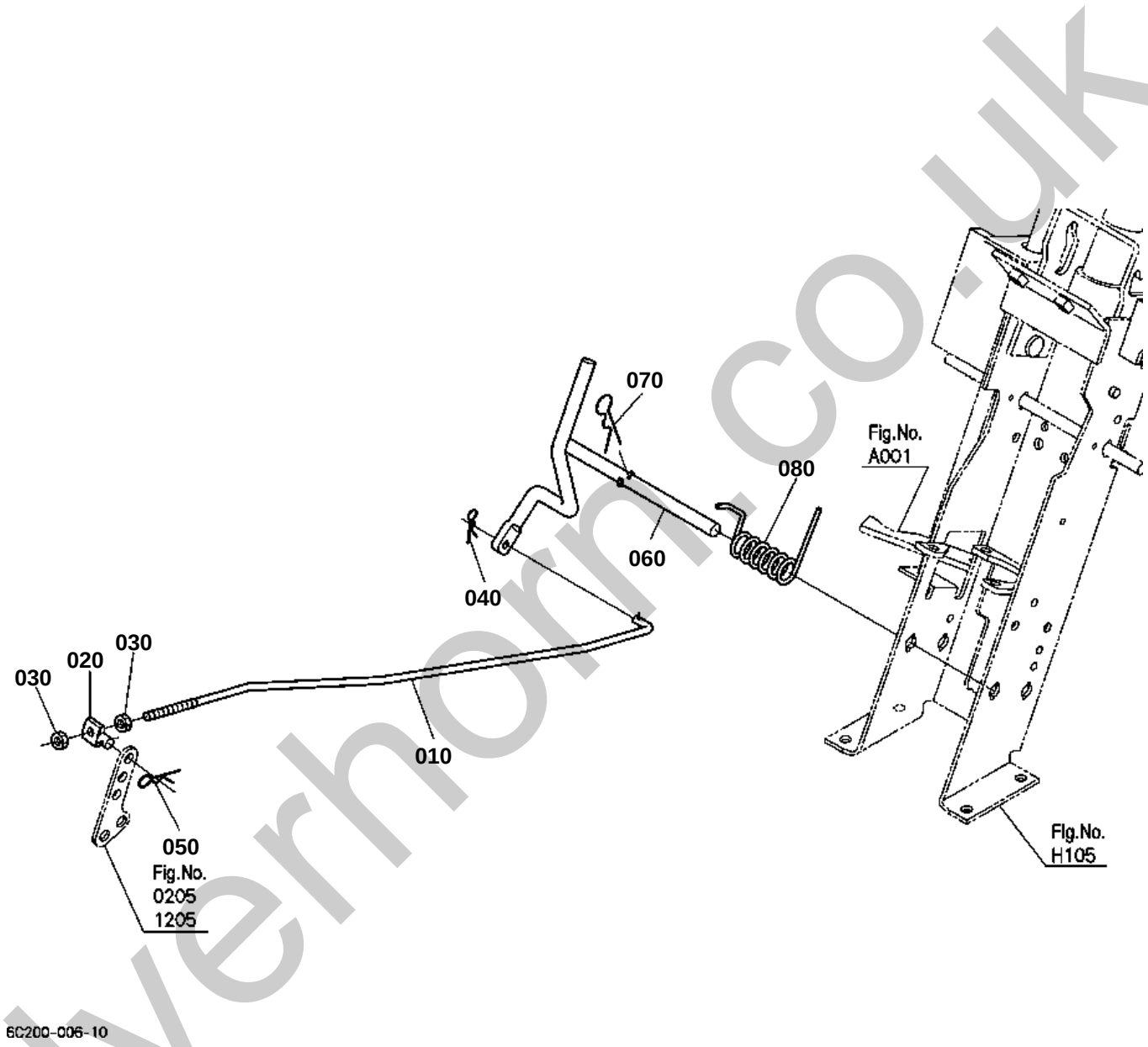

silverhorn.co.uk

ACCELERAOTR ROD

↔ Interchangeable; ≠ not interchangeable; ← new for old; → old for new

REF.No	Part No.	Description	Q'ty	S.No.	I/C	REMARKS	Weight (kgf)	Weight (lb)
010	6C220-43270	ROD RELEASE	1				0	0
020	6C040-43280	CONNECTOR	1				0.008	0.0176
030	02014-50060	NUT	2				0.002	0.0044
040	05525-60600	PIN SNAP	1				0.001	0.0022
050	05525-50800	PIN SNAP	1				0.001	0.0022
060	6C200-43240	ARM RELEASE	1				0	0
070	05525-61000	PIN SNAP	1				0.002	0.0044
080	6A700-43290	SPRING	1				0.025	0.055

silverhorn.co.uk

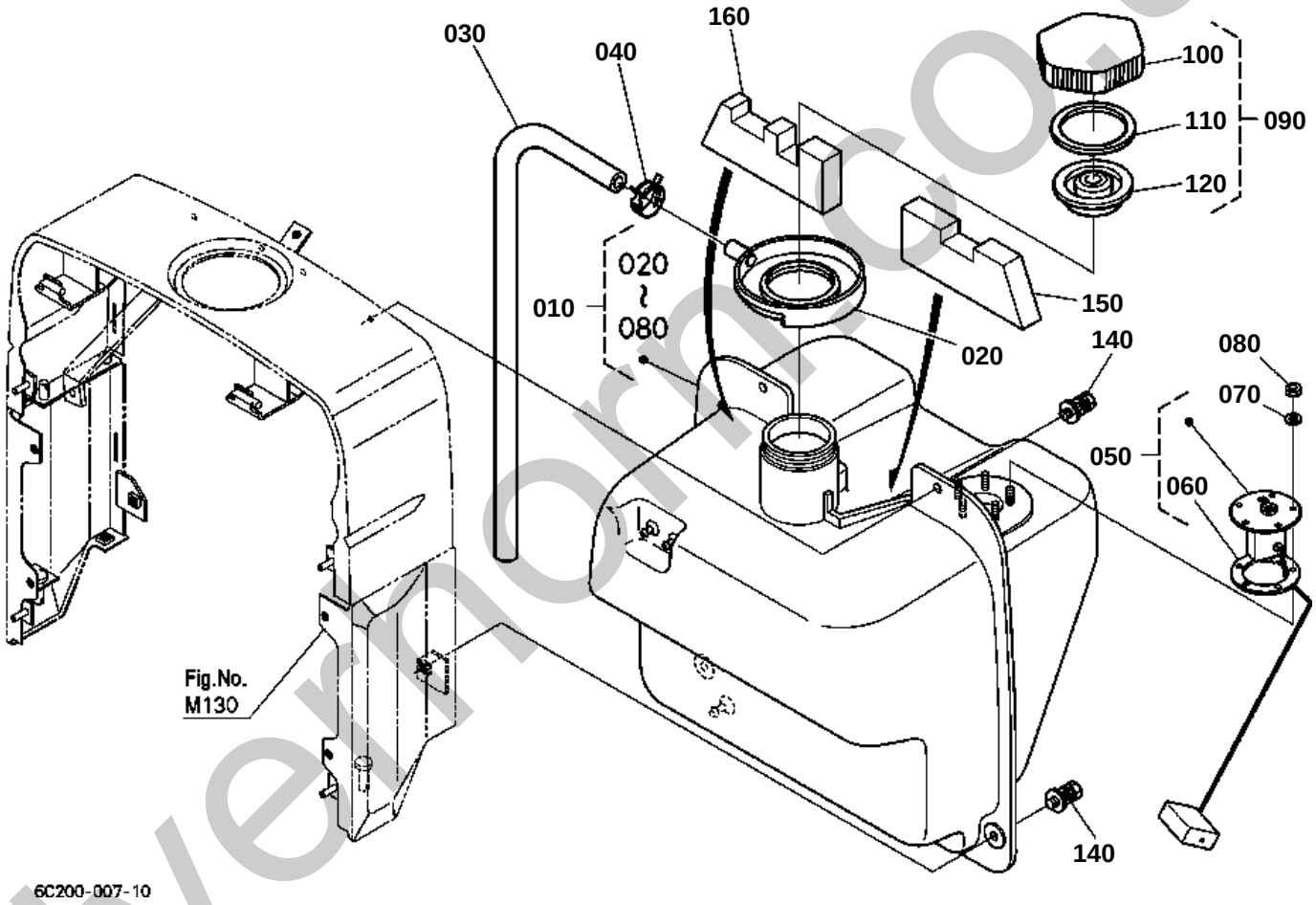

silvermore.co.uk

FUEL TANK

↔ Interchangeable; ≠ not interchangeable; ← new for old; → old for new

REF.No	Part No.	Description	Q'ty	S.No.	I/C	REMARKS	Weight (kgf)	Weight (lb)
010	6C200-54702	ASSY TANK FUEL	1				0	0
020	6C090-54740	TRAY FUEL	1				0.04	0.088
030	6C120-54760	PIPE	1				0.09	0.198
040	09318-88185	CLAMP HOSE	1				0.004	0.0088
050	6C200-54750	GAUGE FUEL	1				0	0
060	6A320-85812	GASKET GAUGE	1				0.005	0.011
070	04512-60050	WASHER SPRING	5				0.002	0.0044
080	02054-50050	NUT	5				0.002	0.0044
090	6A100-54910	ASSY CAP FUEL	1				0.105	0.231
100	6A100-54920	CAP FUEL	1				0.041	0.0902
110	6A100-54942	SPACER	1				0.001	0.0022
120	6A100-54952	GASKET	1				0.02	0.044
130	99999-99999	BLANK	0				0	0
140	01125-50825	BOLT	4				0.018	0.0396
150	6C200-54780	SPONGE LH	1				0	0
160	6C200-54790	SPONGE RH	1				0	0

silverhorn.co.uk

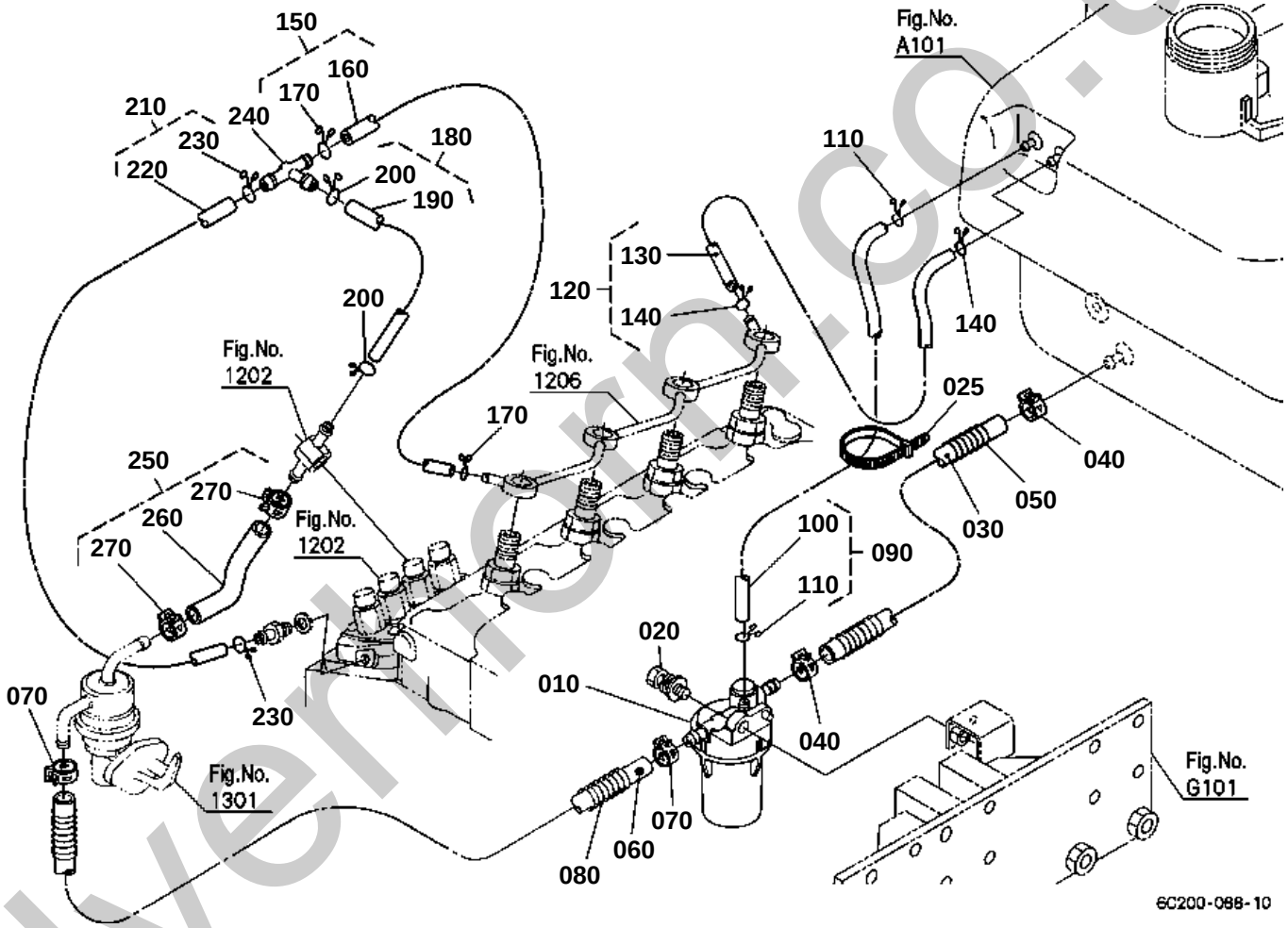

silvermorn.co.uk

↔ Interchangeable; ≠ not interchangeable; ← new for old; → old for new

REF.No	Part No.	Description	Q'ty	S.No.	I/C	REMARKS	Weight (kgf)	Weight (lb)
010	6A320-58862	ASSY FILTER FUEL	1				0.09	0.198
020	01125-50825	BOLT	1				0.018	0.0396
025	55311-41260	BAND CORD	1				0.007	0.0154
030	09661-70400	TUBE FUEL	1				0.045	0.099
040	14911-42750	CLIP PIPE	2				0.002	0.0044
050	67156-53720	SPRING PIPE PROTECT.	1				0.001	0.0022
060	09661-70400	TUBE FUEL	1				0.045	0.099
070	14911-42750	CLIP PIPE	2				0.002	0.0044
080	67156-53720	SPRING PIPE PROTECT.	1				0.001	0.0022
090	T0070-42642	ASSY TUBE FUEL	1				0.04	0.088
100	09661-40600	TUBE FUEL	1				0.03	0.066
110	14971-42750	CLIP PIPE	2				0.001	0.0022
120	34670-35540	ASSY PIPE FUEL	1				0.025	0.055
130	34670-35640	PIPE FUEL	1				0.02	0.044
140	14971-42750	CLIP PIPE	2				0.001	0.0022
150	16294-42502	ASSY TUBE FUEL	1				0.01	0.022
160	09661-40150	TUBE FUEL	1				0.008	0.0176
170	14971-42750	CLIP PIPE	2				0.001	0.0022
180	17208-42030	ASSY PIPE OVER FLOW	1				0.006	0.0132
190	09661-40100	TUBE FUEL	1				0.006	0.0132
200	14971-42750	CLIP PIPE	2				0.001	0.0022
210	16282-42020	ASSY PIPE OVER FLOW	1				0.01	0.022
220	09661-40040	TUBE FUEL	1				0.005	0.011
230	14971-42750	CLIP PIPE	2				0.001	0.0022
240	1C020-42360	JOINT T-PIPE	1				0.002	0.0044
250	6C070-59430	ASSY TUBE FUEL	1				0.01	0.022
260	09661-80095	TUBE FUEL	1				0.011	0.0242
270	14911-42750	CLIP PIPE	2				0.002	0.0044

silverhorn.co.uk

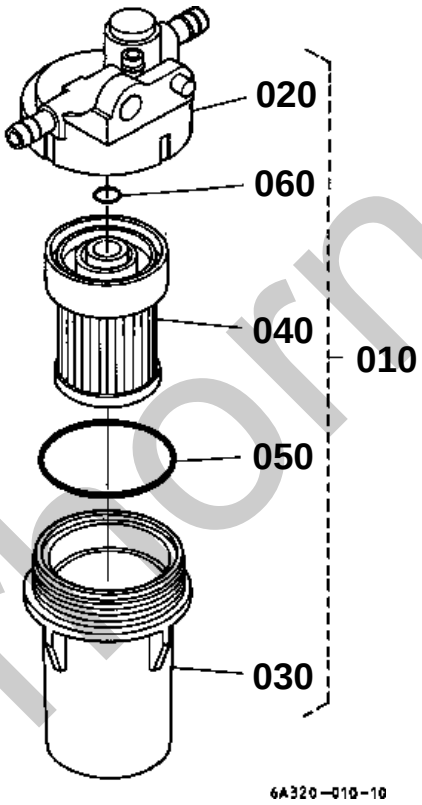

silverhorn.co.uk

FUEL FILTER [COMPONENT PARTS]

↔ Interchangeable; ≠ not interchangeable; ← new for old; → old for new

REF.No	Part No.	Description	Q'ty	S.No.	I/C	REMARKS	Weight (kgf)	Weight (lb)
010	6A320-58862	ASSY FILTER FUEL	1				0.09	0.198
020	6A320-59912	BODY	1				0.035	0.077
030	6A320-59920	CUP	1				0.03	0.066
040	6A320-59930	FILTER	1				0.025	0.055
050	6A320-59940	O-RING	1				0.001	0.0022
060	6A320-59950	O-RING	1				0.001	0.0022

silverhorn.co.uk

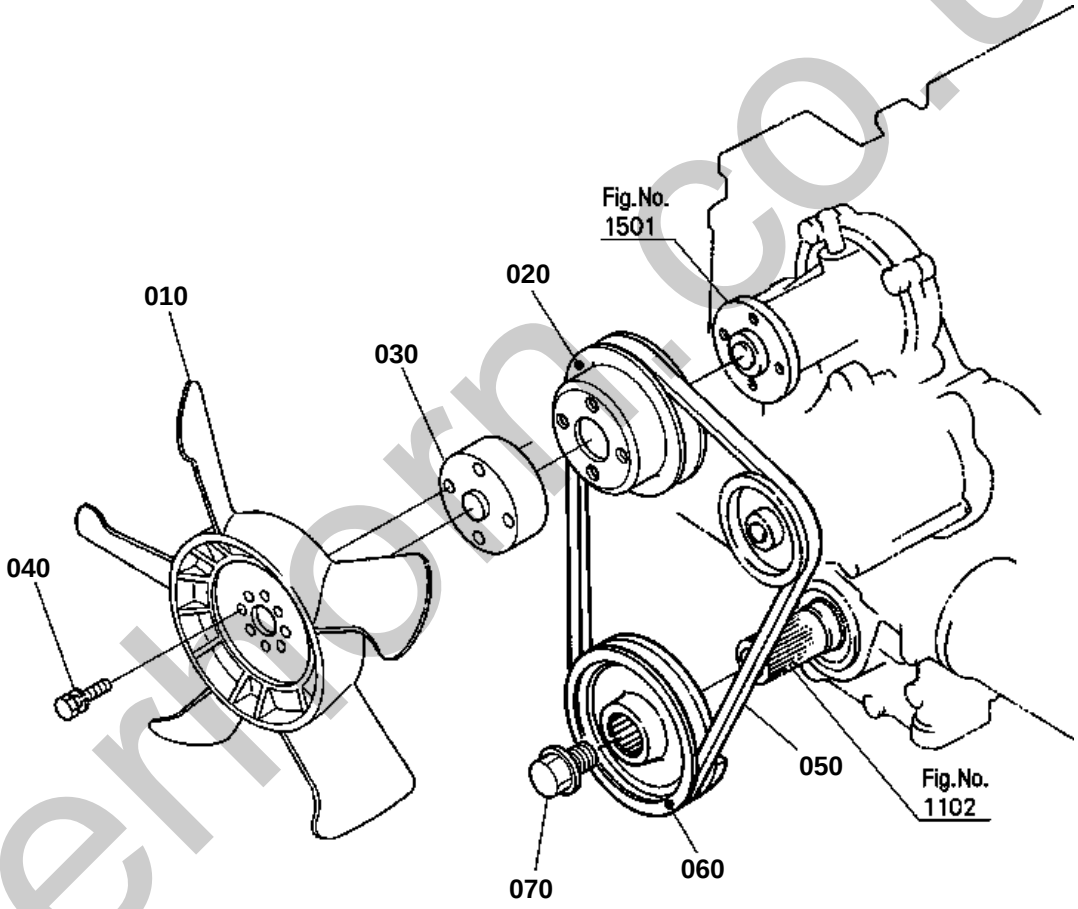

6C200-010-10

silverthorn.co.uk

FAN

↔ Interchangeable; ≠ not interchangeable; ← new for old; → old for new

REF.No	Part No.	Description	Q'ty	S.No.	I/C	REMARKS	Weight (kgf)	Weight (lb)
010	16264-74110	FAN	1				0.32	0.704
020	16263-74250	PULLEY FAN	1				0.21	0.462
030	17053-74150	COLLAR FAN	1				0.11	0.242
040	01025-50635	BOLT	4				0.001	0.0022
050	16241-97010	V BELT	1				0.08	0.176
060	16271-74280	PULLEY FAN DRIVE	1				1	2.2
070	16241-91020	BOLT FAN DRIVE	1				0.1	0.22

silverhorn.co.uk

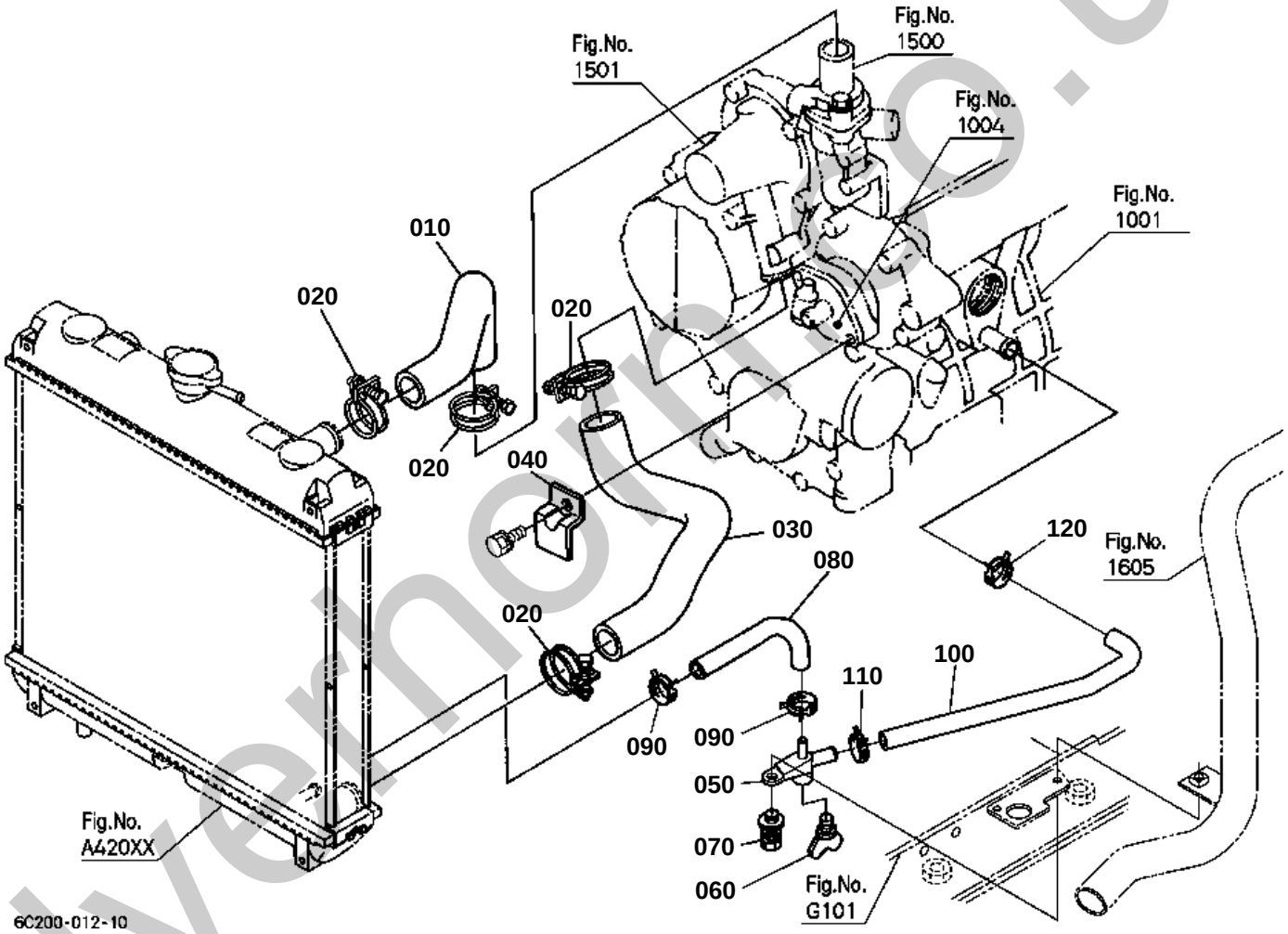

silverhorse.uk

WATER PIPE

↔ Interchangeable; ≠ not interchangeable; ← new for old; → old for new

REF.No	Part No.	Description	Q'ty	S.No.	I/C	REMARKS	Weight (kgf)	Weight (lb)
010	6C070-58630	HOSE WATER	1				0.11	0.242
020	67955-58630	CLAMP HOSE	4				0.025	0.055
030	6C070-58570	HOSE WATER	1				0.175	0.385
040	6C040-58640	CLAMP WATER HOSE	1				0.031	0.0682
050	6C040-58650	COCK	1				0.017	0.0374
060	55364-82110	COCK DRAIN	1				0.005	0.011
070	01125-50825	BOLT	1				0.018	0.0396
080	6C040-58680	HOSE DRAIN	1				0.023	0.0506
090	09318-88130	CLAMP HOSE	2				0.002	0.0044
100	6C070-58690	HOSE DRAIN	1				0.04	0.088
110	6A671-58650	CLAMP HOSE	1				0.003	0.0066
120	6A671-58650	CLAMP HOSE	1				0.003	0.0066

silverhorn.co.uk

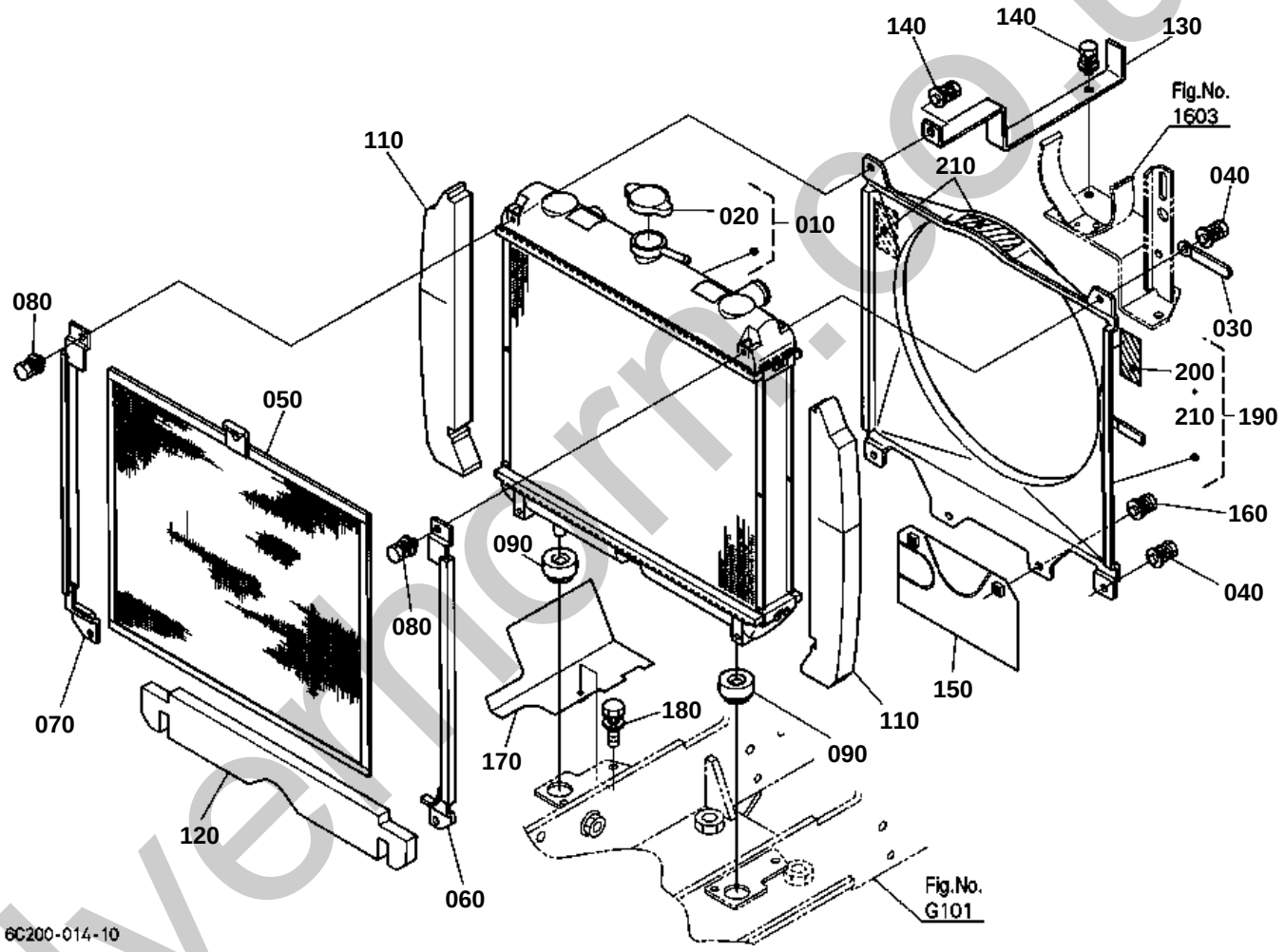

silvermorn.co.uk

RADIATOR

↔ Interchangeable; ≠ not interchangeable; ← new for old; → old for new

REF.No	Part No.	Description	Q'ty	S.No.	I/C	REMARKS	Weight (kgf)	Weight (lb)
010	6C170-58520	ASSY RADIATOR	1				3.5	7.7
020	17214-72020	ASSY CAP RADIATOR	1				0.05	0.11
030	15272-67590	CLAMP CORD	1				0.004	0.0088
040	01025-50612	BOLT	3				0.005	0.011
050	6C040-58530	NET RADIATOR	1				0.25	0.55
060	6C040-58543	GUIDE RADIATOR NET L	1				0.114	0.2508
070	6C040-58553	GUIDE RADIATOR NET R	1				0.114	0.2508
080	01025-50612	BOLT	4				0.005	0.011
090	6C040-58580	CUSHION RADIATOR	2				0.021	0.0462
100	99999-99999	BLANK	0				0	0
110	6C200-54450	TAPE RADIATOR LH	2				0	0
120	6C040-54472	TAPE RADIATOR	1				0.027	0.0594
130	6C070-58592	STAY RADIATOR	1				0.2	0.44
140	01025-50616	BOLT	2				0.005	0.011
150	6C200-58620	PLATE SHUTTER	1				0	0
160	01125-60816	BOLT	2				0.01	0.022
170	6C200-58662	PLATE RH	1				0.17	0.374
180	01125-60816	BOLT	1				0.01	0.022
190	6C040-58602	KIT SHROUD FAN	1				0.7	1.54
200	TA040-49580	LABEL MUFFLER	1				0.001	0.0022
210	32751-49580	LABEL FAN BELT	2				0.001	0.0022

silverhorn.co.uk

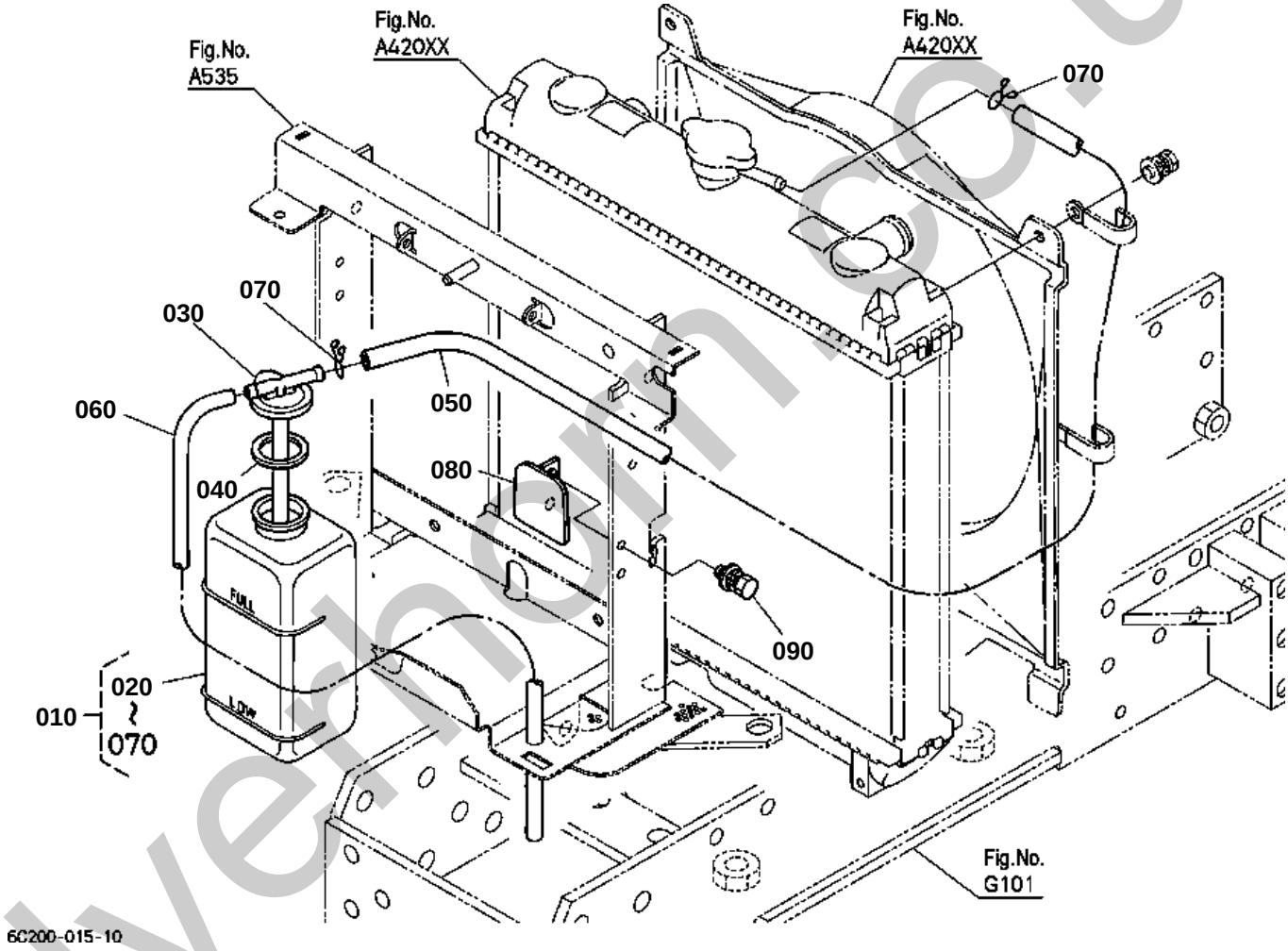

silverhorn.co.uk

↔ Interchangeable; ≠ not interchangeable; ← new for old; → old for new

REF.No	Part No.	Description	Q'ty	S.No.	I/C	REMARKS	Weight (kgf)	Weight (lb)
010	6C070-58800	ASSY TANK RESERVE	1				0.27	0.594
020	15531-72410	BODY TANK	1				0.4	0.88
030	15531-72422	CAP	1				0.001	0.0022
040	15531-72432	GASKET	1				0.002	0.0044
050	15471-72440	PIPE WATER OVER FLOW	1				0.05	0.11
060	6C070-58850	PIPE WATER OVER FLOW	1				0.025	0.055
070	15501-72470	CLIP PIPE	2				0.005	0.011
080	6A100-58830	SUPPORT RESERVE TANK	1				0.05	0.11
090	01025-50616	BOLT	2				0.005	0.011

silverhorn.co.uk

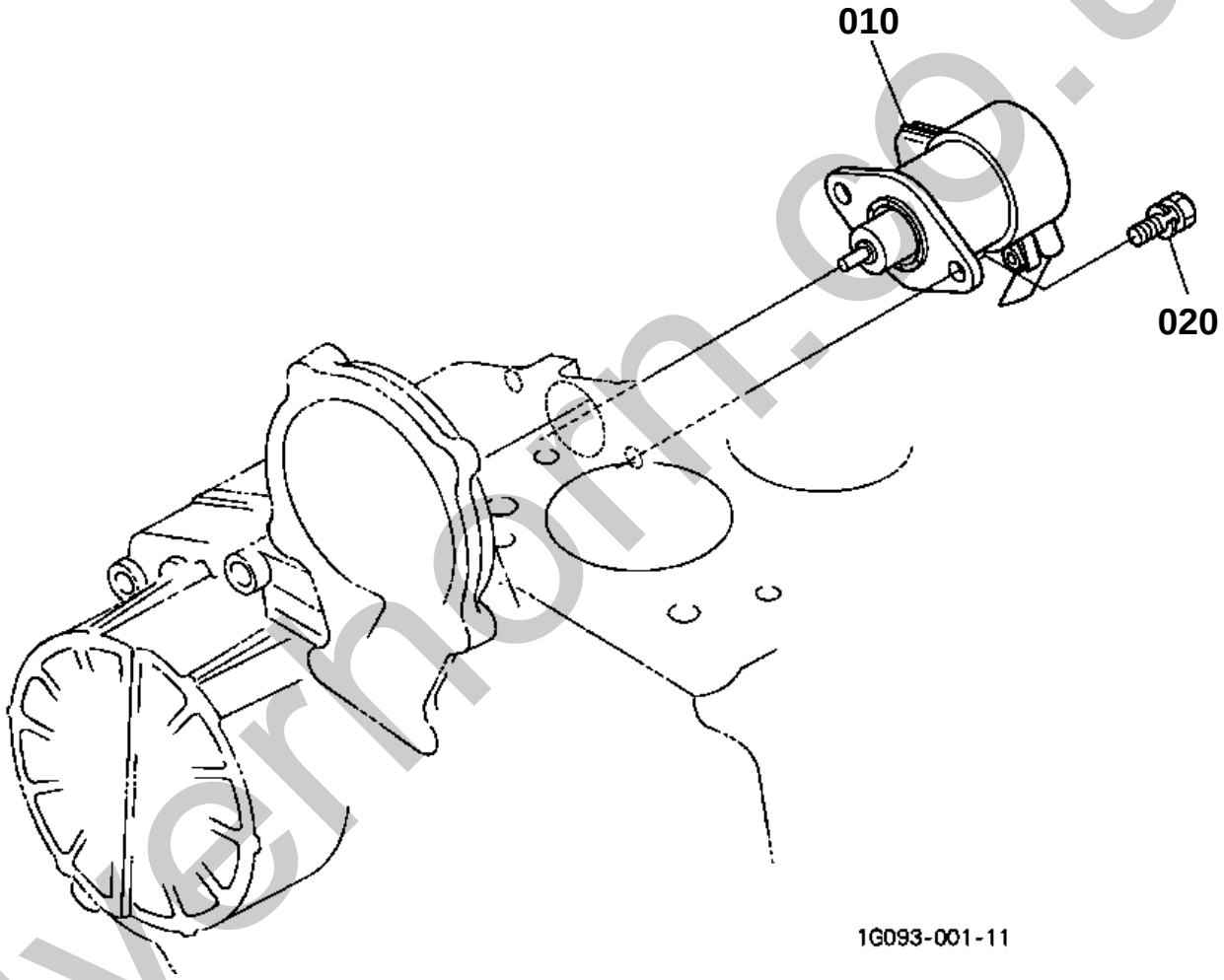

silvernorm.co.uk

STOP SOLENOID

↔ Interchangeable; ≠ not interchangeable; ← new for old; → old for new

REF.No	Part No.	Description	Q'ty	S.No.	I/C	REMARKS	Weight (kgf)	Weight (lb)
010	32721-60010	SOLENOID STOP	1				0.28	0.616
020	01202-50616	BOLT	2				0.006	0.0132

silverhorn.co.uk

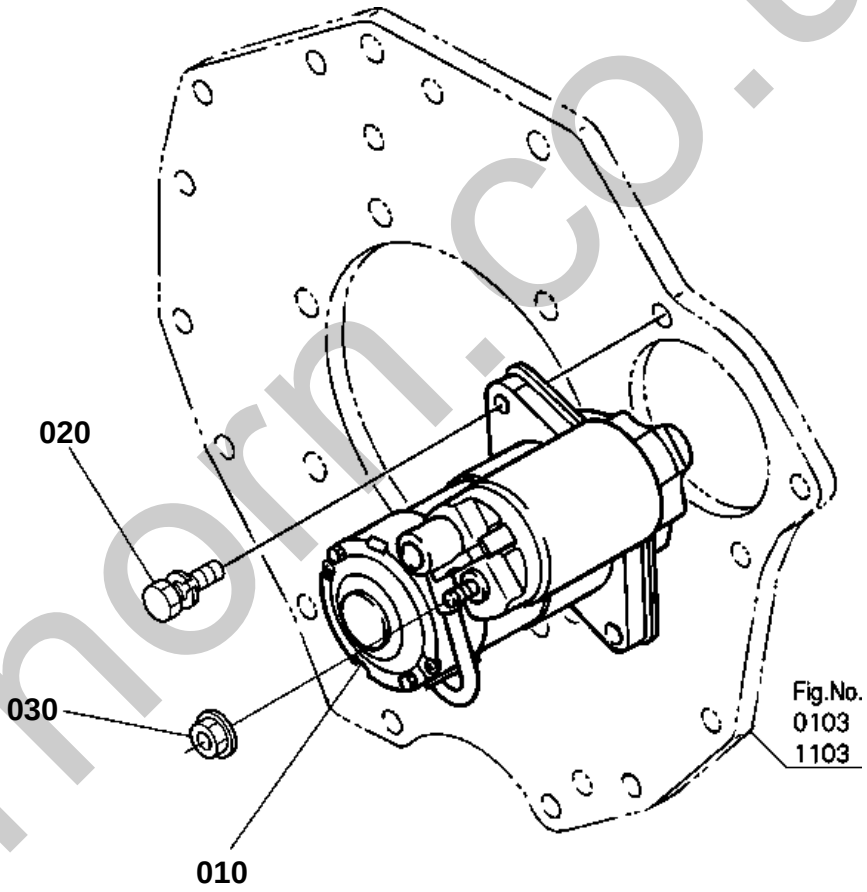

6C200-016-10

silverhorn.co.uk

↔ Interchangeable; ≠ not interchangeable; ← new for old; → old for new

REF.No	Part No.	Description	Q'ty	S.No.	I/C	REMARKS	Weight (kgf)	Weight (lb)
010	6C070-59210	ASSY STARTER	1				3.2	7.04
020	01123-50840	BOLT	2				0.018	0.0396
030	02121-50080	NUT	1				0.01	0.022

silverhorn.co.uk

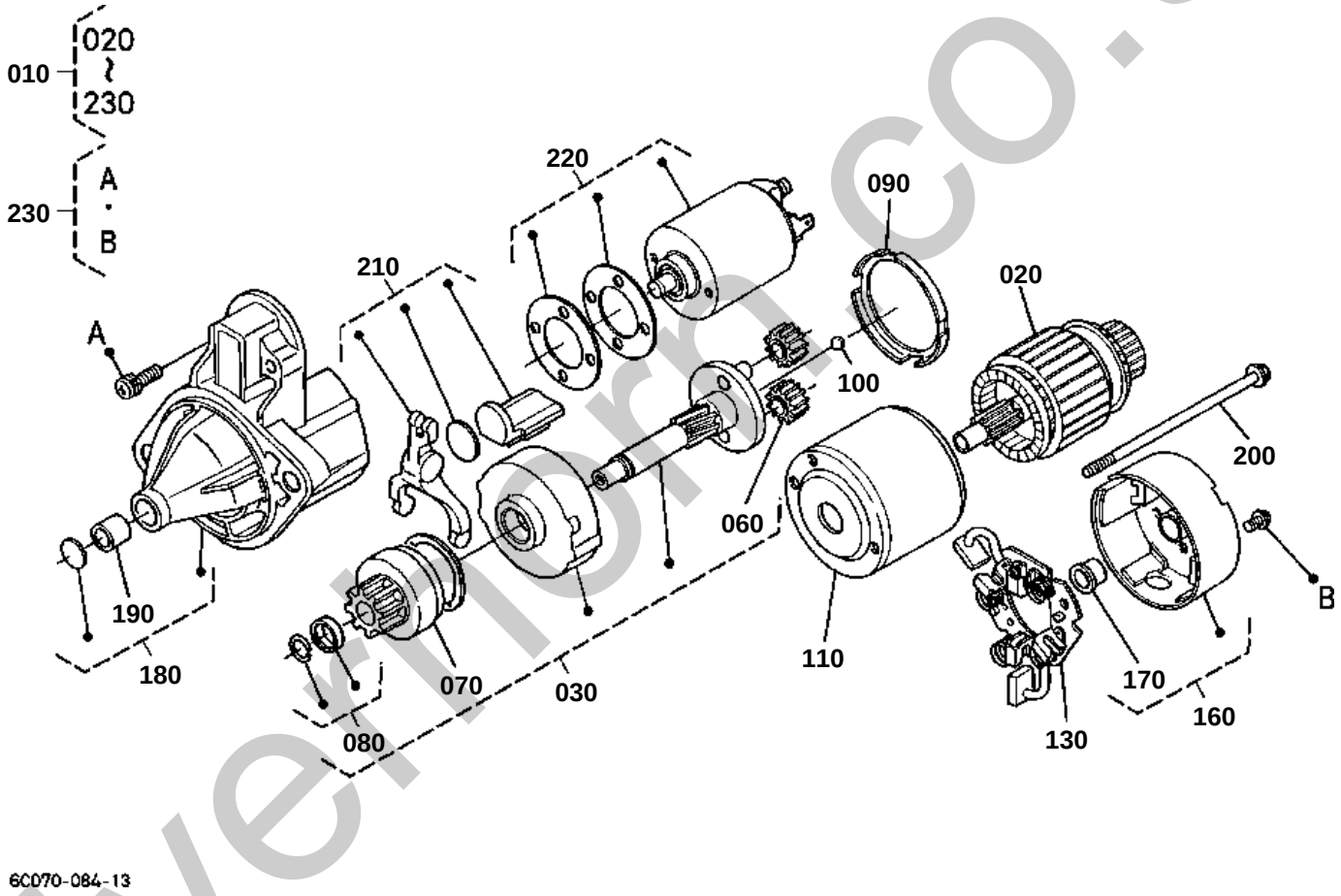

silvermoor.co.uk

↔ Interchangeable; ≠ not interchangeable; ← new for old; → old for new

REF.No	Part No.	Description	Q'ty	S.No.	I/C	REMARKS	Weight (kgf)	Weight (lb)
010	6C070-59210	ASSY STARTER	1				3.2	7.04
020	6C070-82610	ARMATURE	1				0.8	1.76
030	6C070-82620	ASSY SHAFT	1				0.52	1.144
040	99999-99999	BLANK	0				0	0
050	99999-99999	BLANK	0				0	0
060	6C040-82650	GEAR PLANETARY	3				0.016	0.0352
070	6C040-82660	CLUTCH OVER RUNNING	1				0.3	0.66
080	6C040-82670	STOPPER	1				0.004	0.0088
090	6C070-82680	GASKET	1				0.004	0.0088
100	6C040-82690	BALL	1				0.001	0.0022
110	6C070-82700	YOKE	1				0.65	1.43
120	99999-99999	BLANK	0				0	0
130	6C070-82720	ASSY HOLDER BRUSH	1				0.07	0.154
140	99999-99999	BLANK	0				0	0
150	99999-99999	BLANK	0				0	0
160	6C070-82750	ASSY BRACKET REAR	1				0.16	0.352
170	6C040-82760	BUSH	1				0.005	0.011
180	6C070-82770	ASSY BRACKET FRONT	1				0.57	1.254
190	15852-63240	BUSH	1				0.006	0.0132
200	6C070-82780	BOLT	2				0.012	0.0264
210	6C070-82790	LEVER FORK	1				0.018	0.0396
220	6C040-82800	ASSY SWITCH MAGNETIC	1				0.63	1.386
230	15852-93310	SCREW PAN-HEAD	1				0.02	0.044

silverhorn.co.uk

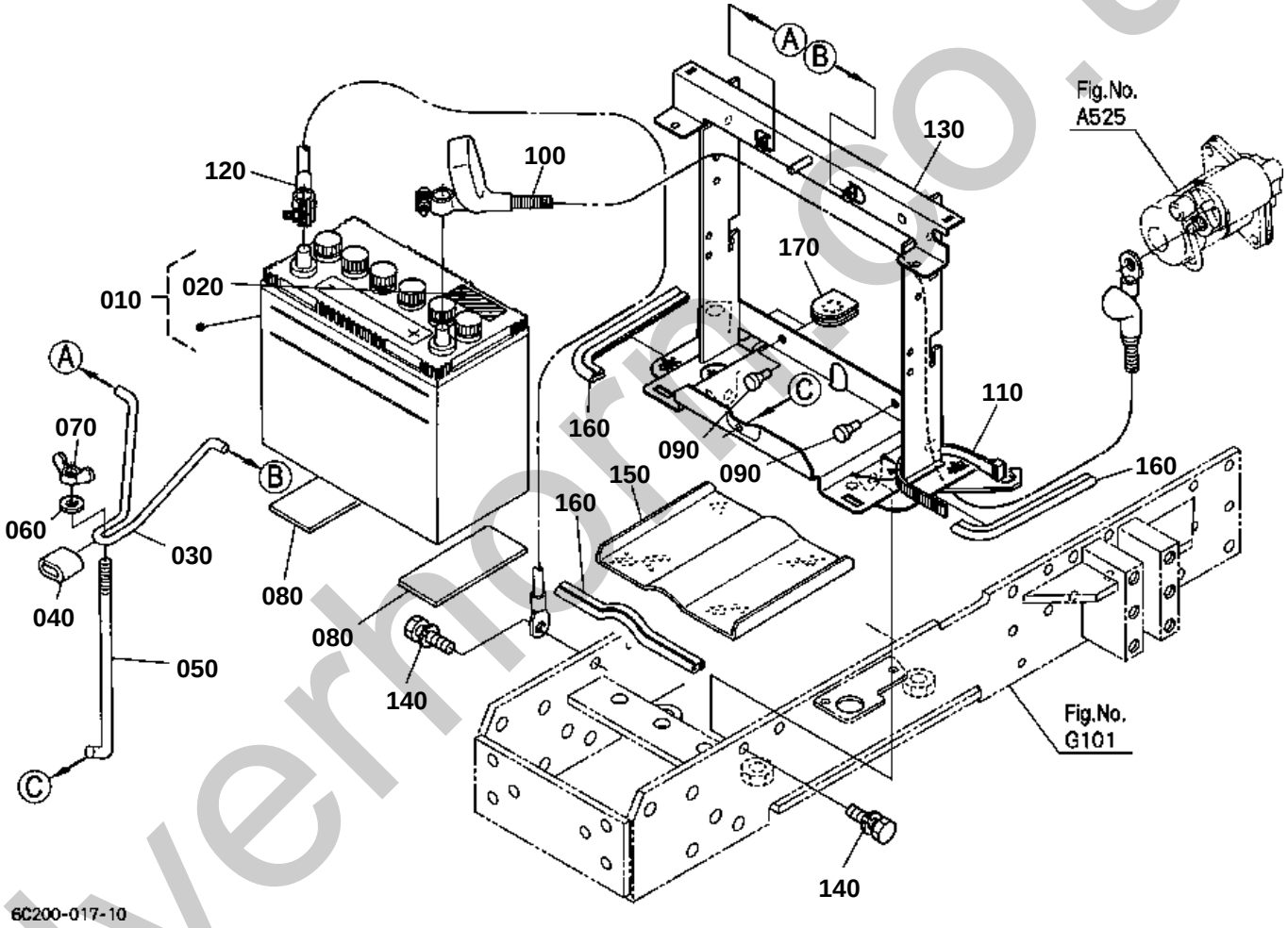

silverhorn.co.uk

BATTERY

↔ Interchangeable; ≠ not interchangeable; ← new for old; → old for new

REF.No	Part No.	Description	Q'ty	S.No.	I/C	REMARKS	Weight (kgf)	Weight (lb)
010	99999-99999	ASSY BATTERY	1			55B24L	0	0
020	6C040-55590	LABEL BATTERY	1				0.001	0.0022
030	6C040-55553	RETAINER BATTERY	1				0.075	0.165
040	6C040-55580	CUSHION	1				0.002	0.0044
050	6C040-55560	BOLT HOOK	1				0.038	0.0836
060	04015-60060	WASHER PLAIN	1				0.005	0.011
070	02810-50060	NUT WING	1				0.009	0.0198
080	34150-33220	CUSHION	2				0.015	0.033
090	67156-52170	CUSHION	2				0.05	0.11
100	6C070-55530	CORD BATTERY(+)	1				0.23	0.506
110	53581-64150	BAND CORD	1				0.002	0.0044
120	6C040-55540	CORD BATTERY(-)	1				0.11	0.242
130	6C200-51220	BRACKET BATTERY	1				0	0
140	01135-61025	BOLT	2				0.04	0.088
150	6C040-51260	NET	1				0.25	0.55
160	76650-42520	TRIM DUSTPROOF	3				0.03	0.066
170	6C040-51290	RUBBER	2				0.003	0.0066

silverhorn.co.uk

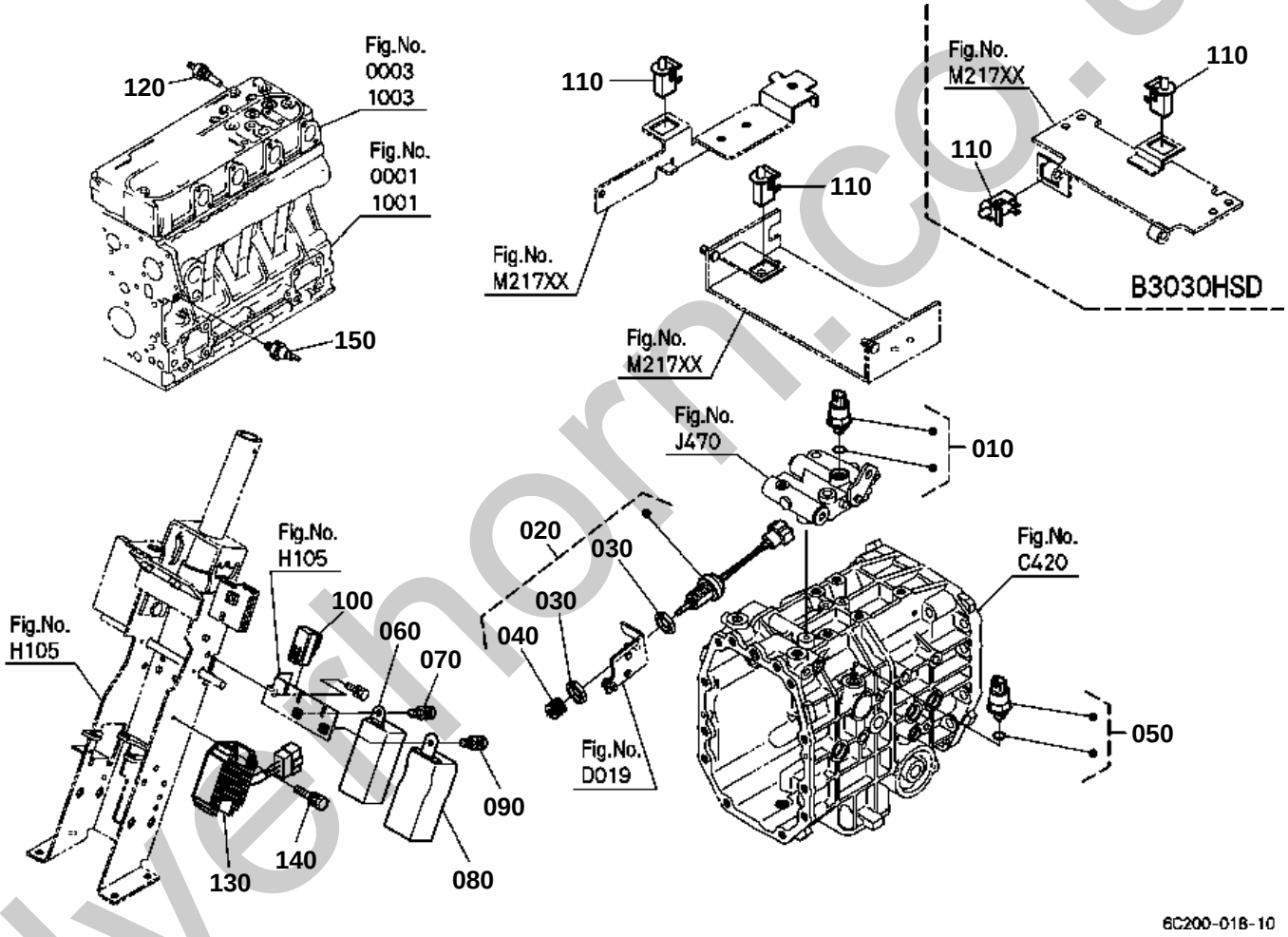

silvershorn.co.uk

↔ Interchangeable; ≠ not interchangeable; ← new for old; → old for new

REF.No	Part No.	Description	Q'ty	S.No.	I/C	REMARKS	Weight (kgf)	Weight (lb)
010	6A700-18810	SWITCH SAFETY	1				0.052	0.1144
020	52320-42900	SWITCH SAFETY	1				0.1	0.22
030	67111-55830	NUT SAFETY SWITCH	2				0.035	0.077
040	67111-55840	CAP SAFETY SWITCH	1				0.002	0.0044
050	6A700-18810	SWITCH SAFETY	1				0.052	0.1144
060	3F240-75430	UNIT FLASHER	1				0.06	0.132
070	01025-50612	BOLT	1				0.005	0.011
080	6C190-55510	CONTROLLER(OPC)	1				0.06	0.132
090	01025-50612	BOLT	1				0.005	0.011
100	T1060-33720	RELAY STARTER	1				0.02	0.044
110	K1122-62280	SWITCH SEAT	2				0.011	0.0242
120	31351-32830	SENSOR THERMO	1				0.02	0.044
130	5H215-41955	ASSY REGULATOR	1				0.187	0.4114
140	01025-50625	BOLT	1				0.01	0.022
150	15531-39010	SWITCH OIL	1				0.032	0.0704

silverhorn.co.uk

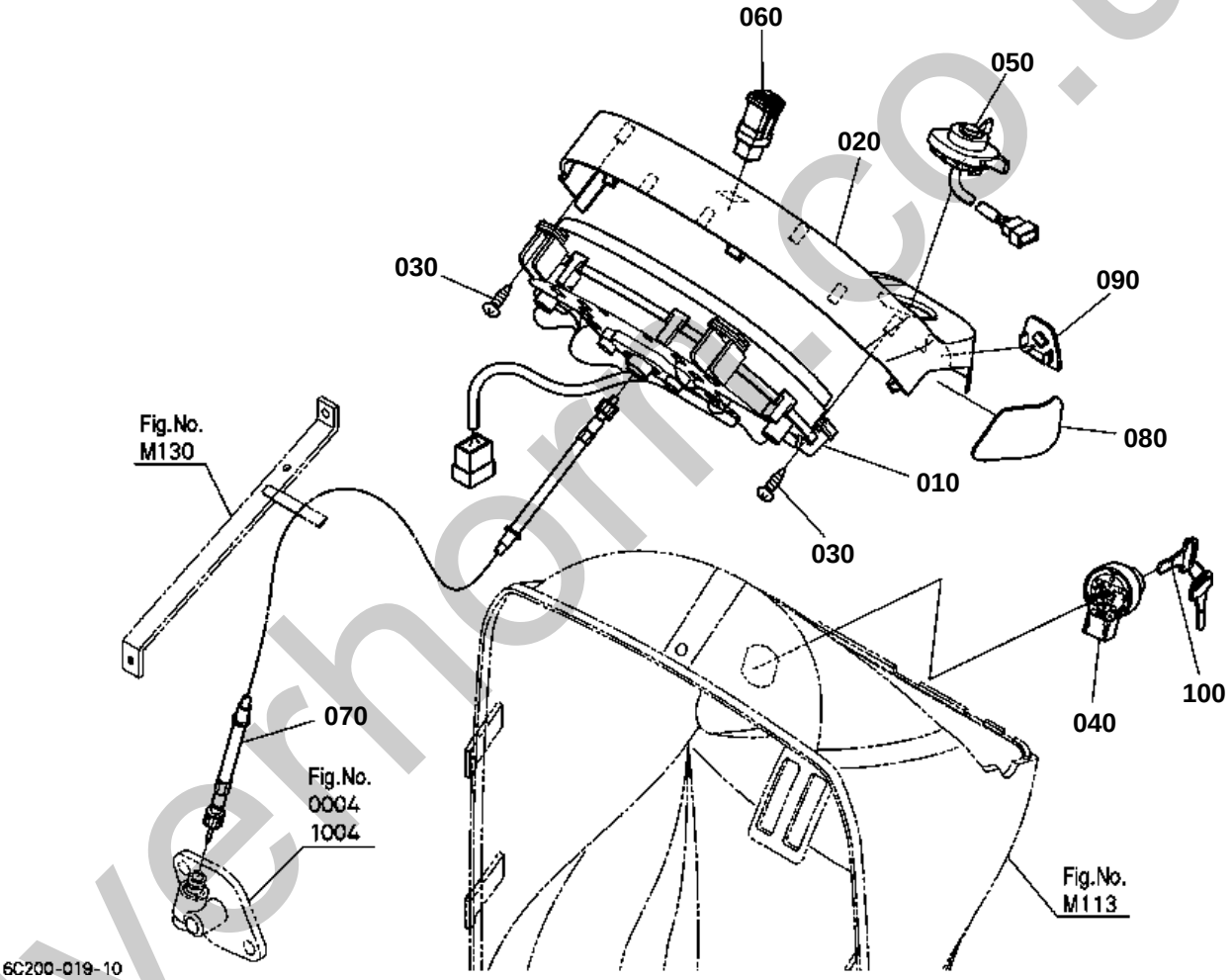

silverhorn.co.uk

↔ Interchangeable; ≠ not interchangeable; ← new for old; → old for new

REF.No	Part No.	Description	Q'ty	S.No.	I/C	REMARKS	Weight (kgf)	Weight (lb)
010	6C220-30200	ASSY PANEL METER	1				0	0
020	6C200-53520	COVER METER PANEL	1				0	0
030	03514-50416	SCREW TAPPING	6				0.002	0.0044
040	6C040-55452	SWITCH STARTER	1				0.22	0.484
050	6C070-55420	SWITCH COMBINATION	1				0.08	0.176
060	6C070-55430	SWITCH HAZARD	1				0.019	0.0418
070	35300-99343	CABLE TRACTORMETER	1				0.22	0.484
080	6C200-53560	COVER SHUTTLE	1				0	0
090	6C200-53570	COVER TILT	1				0	0
100	15248-63700	KEY STARTER	1			2P/SET	0.034	0.0748

silverhorn.co.uk

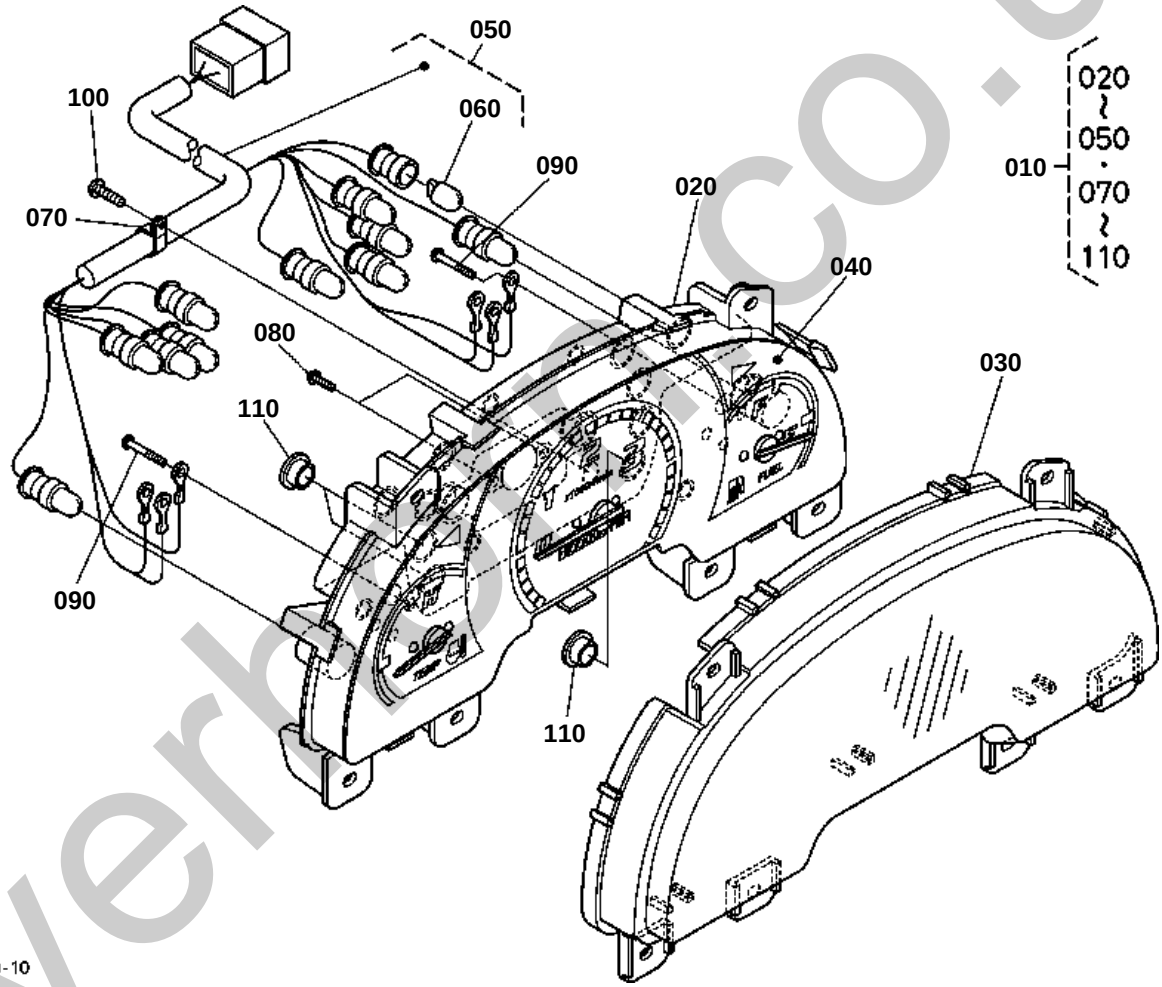

silverhorn.co.uk

PANEL BOARD [COMPONENT PARTS]

↔ Interchangeable; ≠ not interchangeable; ← new for old; → old for new

REF.No	Part No.	Description	Q'ty	S.No.	I/C	REMARKS	Weight (kgf)	Weight (lb)
010	6C220-30200	ASSY PANEL METER	1				0	0
020	6C220-30210	ASSY CASE	1				0	0
030	6A700-30220	GLASS	1				0.2	0.44
040	6C200-30230	CASE METER PANEL	1				0	0
050	6C200-30250	ASSY WIRE HARNESS	1				0	0
060	6A700-30270	LAMP	11			1.7W	0.002	0.0044
070	6C200-30280	CLAMP	1				0	0
080	6C040-55150	SCREW	2				0.002	0.0044
090	66101-55810	SCREW	6				0.001	0.0022
100	6A700-30240	SCREW TAPPING	1				0.002	0.0044
110	6C200-30270	PLUG	3				0	0

silverhorn.co.uk

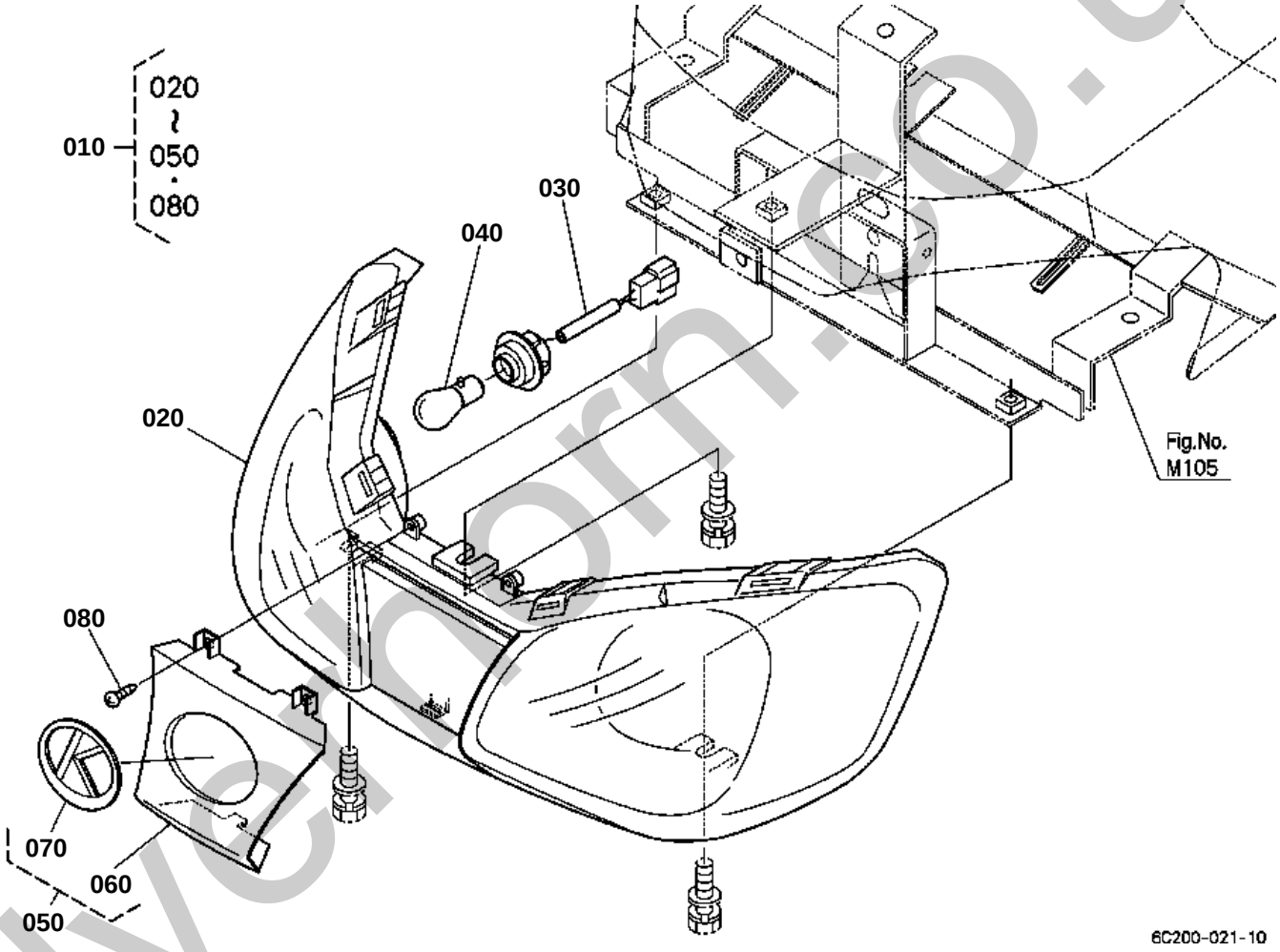

silvernorm.co.uk

↔ Interchangeable; ≠ not interchangeable; ← new for old; → old for new

REF.No	Part No.	Description	Q'ty	S.No.	I/C	REMARKS	Weight (kgf)	Weight (lb)
010	6A700-54130	ASSY LIGHT HEAD	1				1	2.2
020	6A700-54140	ASSY GRILLE LIGHT	1				0.87	1.914
030	6A370-54150	REED COMP.	2				0.2	0.44
040	31391-34360	BULB	2			23W	0.018	0.0396
050	6A700-54160	ASSY MARK SYMBOL	1				0.05	0.11
060	6A700-54170	GRILLE	1				0.04	0.088
070	T1060-49500	MARK SYMBOL	1				0.01	0.022
080	03514-50410	SCREW TAPPING	2				0.001	0.0022

silverhorn.co.uk

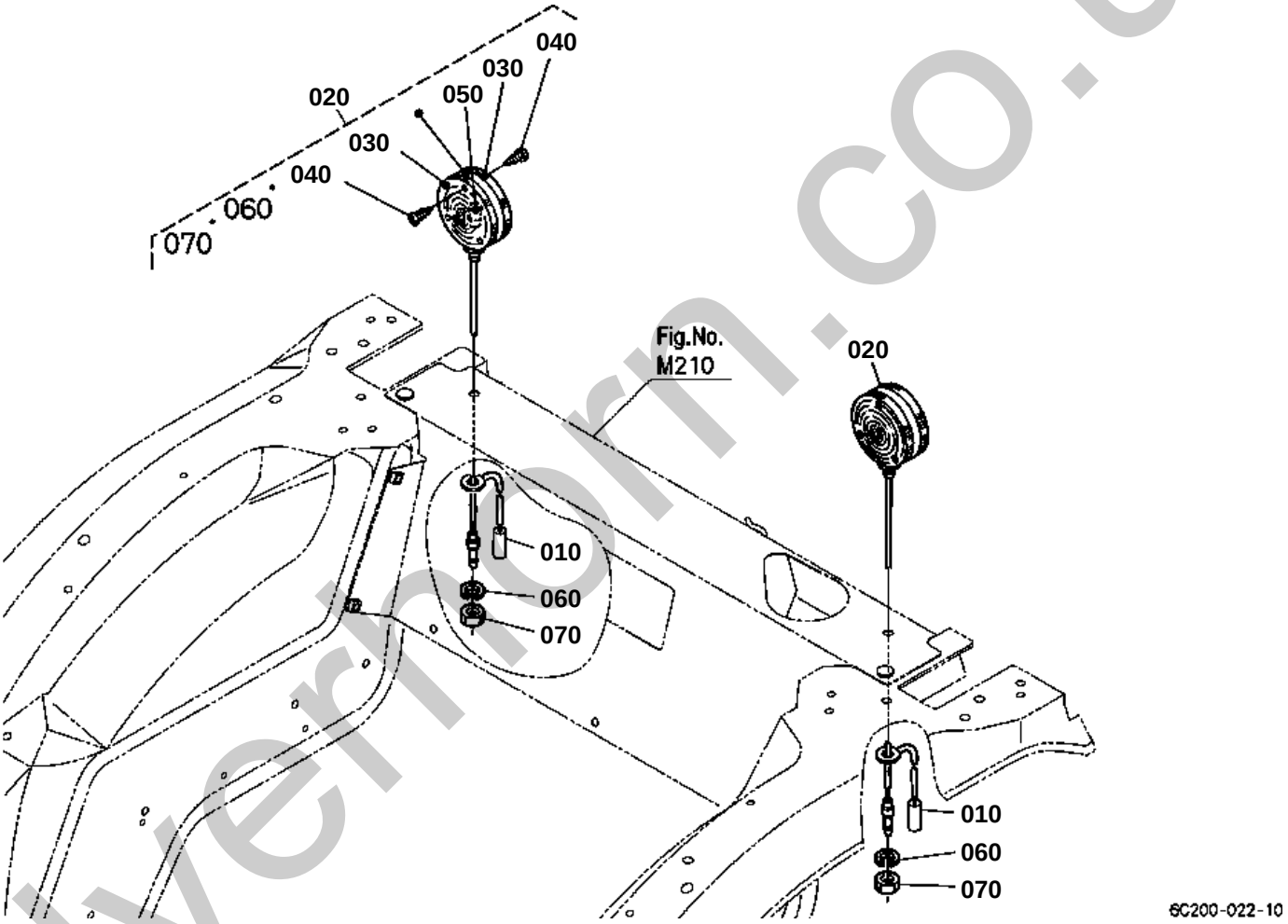

silvermorn.co.uk

HAZARD LIGHT

↔ Interchangeable; ≠ not interchangeable; ← new for old; → old for new

REF.No	Part No.	Description	Q'ty	S.No.	I/C	REMARKS	Weight (kgf)	Weight (lb)
010	6C040-55480	WIRE HARNESS	2				0.005	0.011
020	32530-33610	ASSY LIGHT HAZARD	2				0.38	0.836
030	32530-91510	LENS HAZARD LIGHT	4				0.085	0.187
040	32530-91520	SCREW TAPPING	12				0.001	0.0022
050	32530-91530	BULB LIGHT	2			27W	0.02	0.044
060	04411-50100	WASHER TOOTHED	2				0.001	0.0022
070	02114-50100	NUT	2				0.005	0.011

silverhorn.co.uk

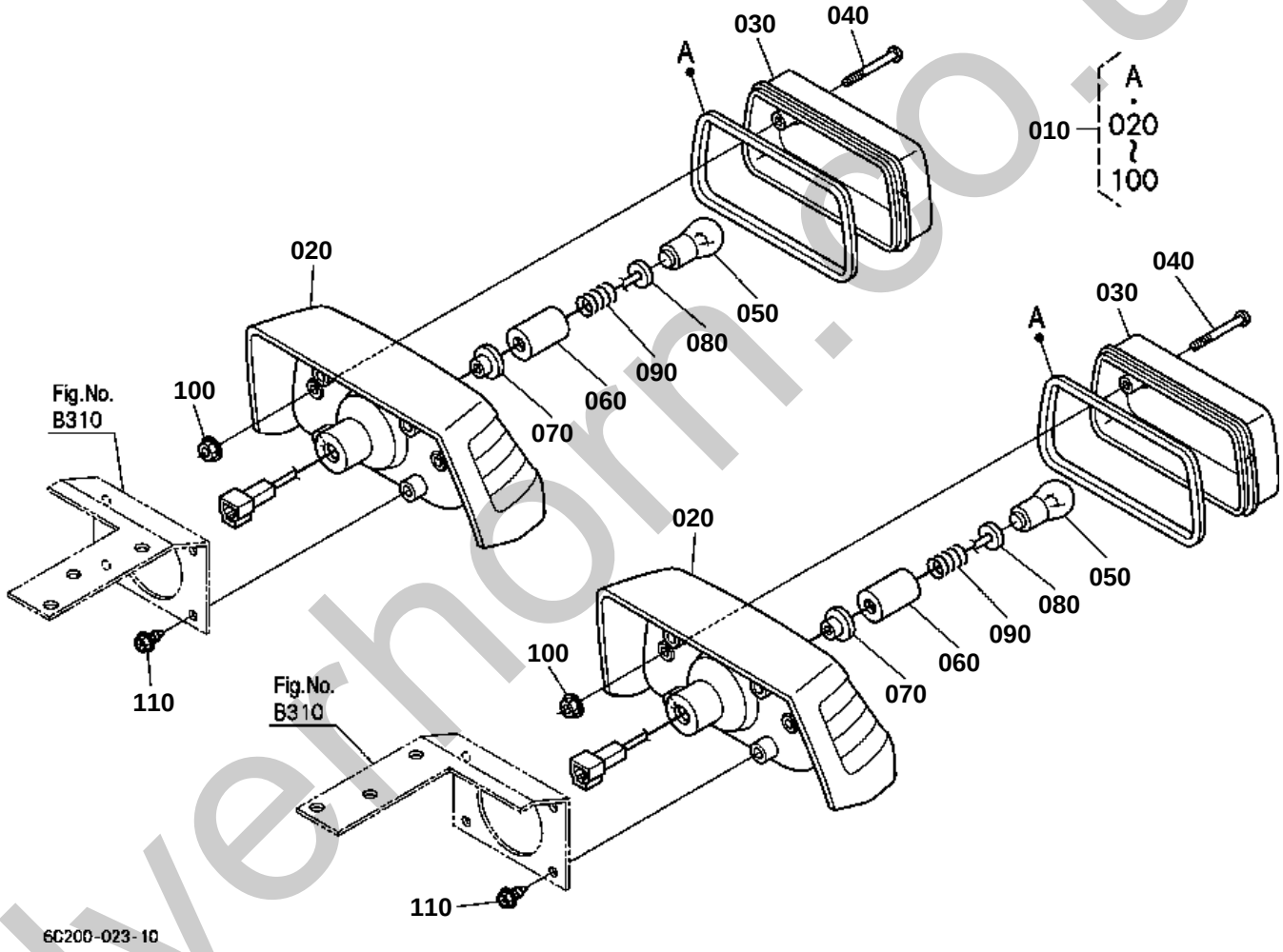

silverhorn.co.uk

TAIL LIGHT

↔ Interchangeable; ≠ not interchangeable; ← new for old; → old for new

REF.No	Part No.	Description	Q'ty	S.No.	I/C	REMARKS	Weight (kgf)	Weight (lb)
010	6C200-55472	ASSY LIGHT TAIL	2				0	0
020	6C200-55480	BODY	2				0	0
030	6C200-55490	LENS TAIL LIGHT	2				0	0
040	03054-50540	SCREW PAN-HEAD	4				0.003	0.0066
050	6C040-92150	BULB	2			8W	0.006	0.0132
060	6C040-92160	SOCKET	2				0.007	0.0154
070	6C040-92170	BUSH RUBBER	2				0.001	0.0022
080	6C040-92180	INSULATOR	2				0.001	0.0022
090	6C040-92190	SPRING	2				0.001	0.0022
100	6C040-92230	NUT	4				0.002	0.0044
110	6A320-52152	SCREW	8				0.005	0.011

silverhorn.co.uk

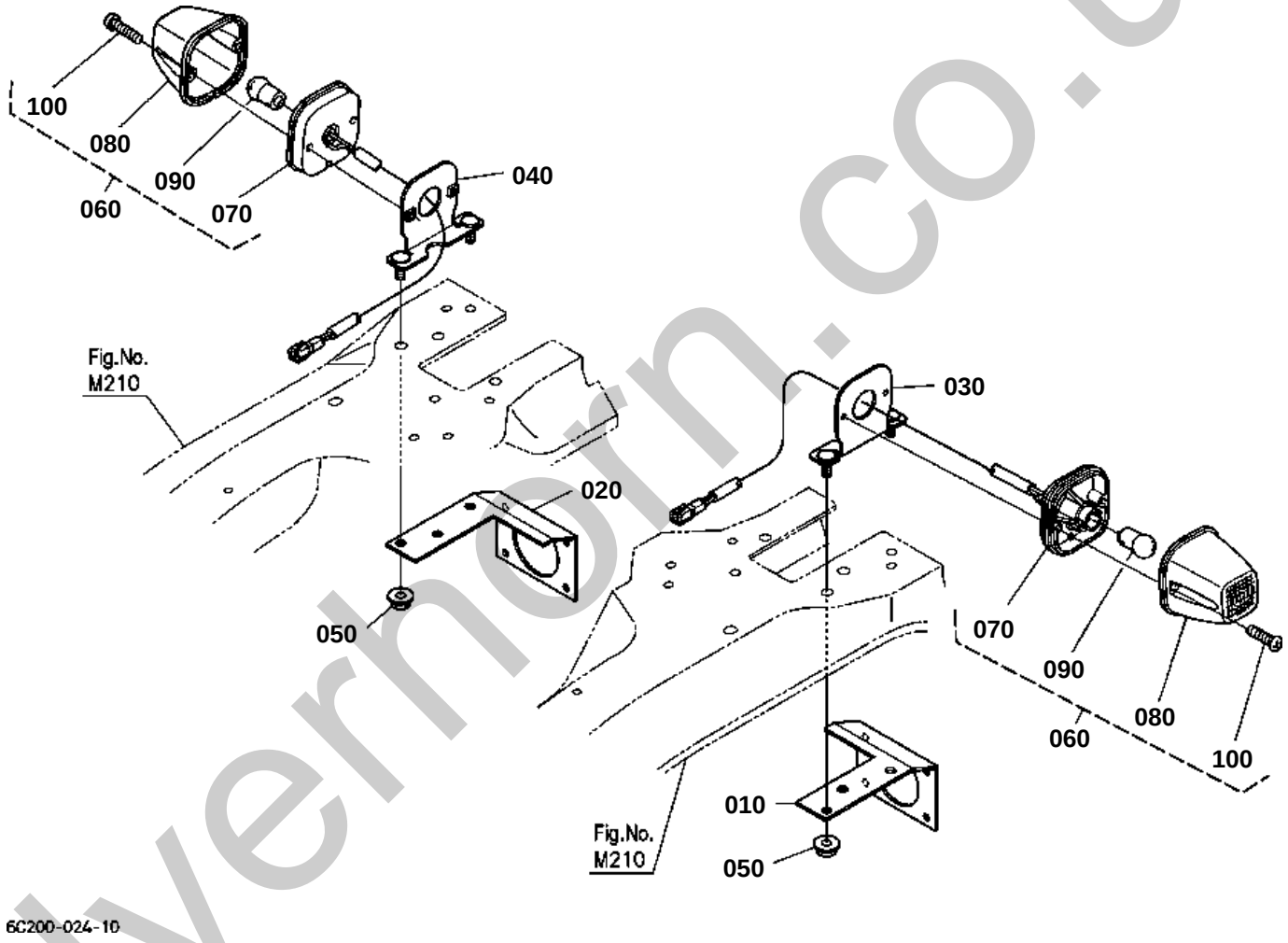

silverhorn.co.uk

WINKER LAMP

↔ Interchangeable; ≠ not interchangeable; ← new for old; → old for new

REF.No	Part No.	Description	Q'ty	S.No.	I/C	REMARKS	Weight (kgf)	Weight (lb)
010	6C200-52780	STAY LH COVER	1				0	0
020	6C200-52790	STAY RH COVER	1				0	0
030	6C200-52740	STAY LH LAMP	1				0	0
040	6C200-52750	STAY RH LAMP	1				0	0
050	02121-50080	NUT	4				0.01	0.022
060	6A100-30100	WINKER LAMP	2				0.089	0.1958
070	6A100-30110	BODY WINKER LAMP	2				0.038	0.0836
080	6A100-30120	LENS	2				0.036	0.0792
090	37410-52720	BULB	2			20W	0.02	0.044
100	03054-50530	SCREW PAN-HEAD	4				0.005	0.011

silverhorn.co.uk

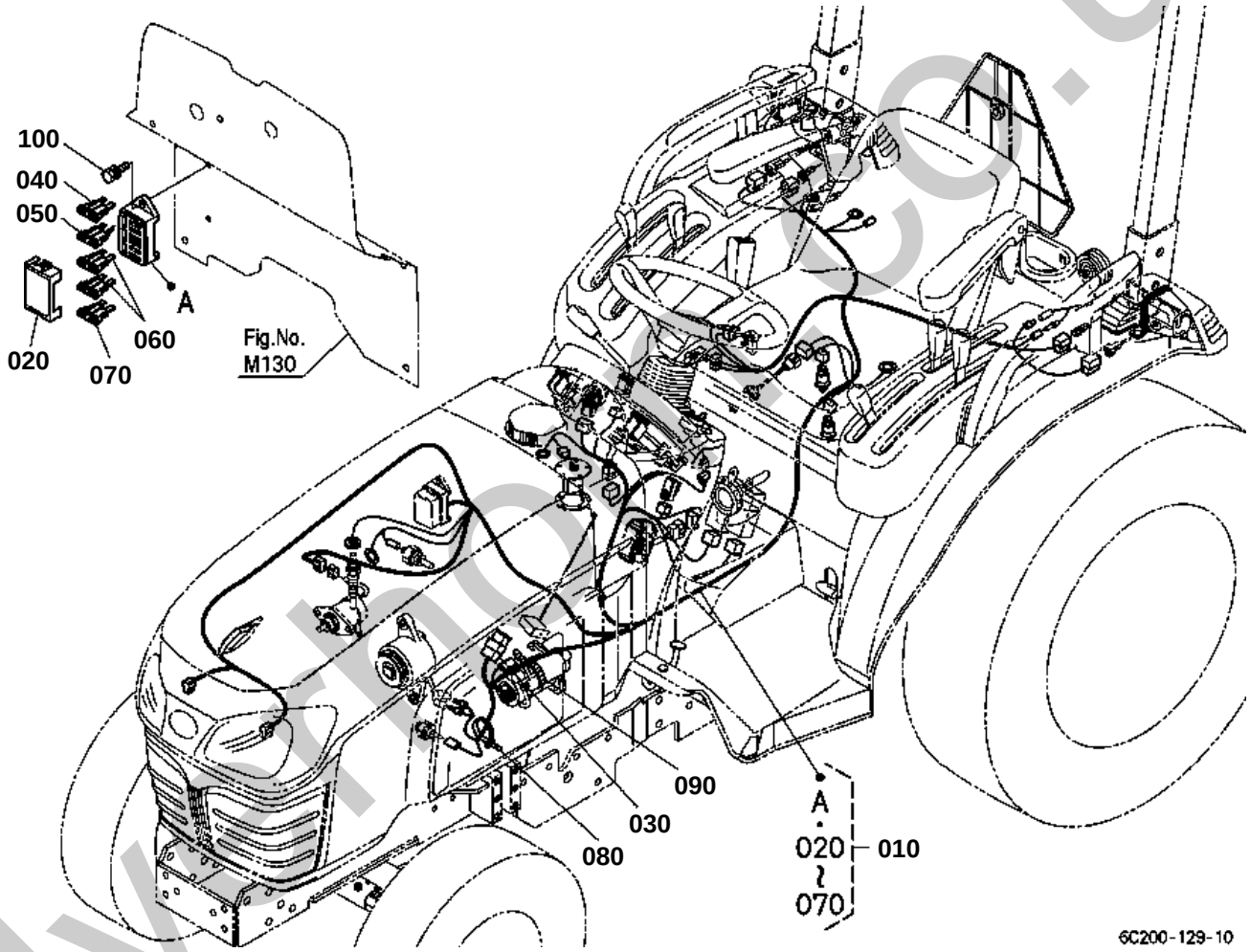

silvermoor.co.uk

↔ Interchangeable; ≠ not interchangeable; ← new for old; → old for new

REF.No	Part No.	Description	Q'ty	S.No.	I/C	REMARKS	Weight (kgf)	Weight (lb)
010	6C200-30402	ASSY WIRE HARNESS	1				0	0
020	6C200-30430	COVER FUSE CASE	1				0	0
030	1G111-65720	FUSE	1			30A	0.009	0.0198
040	66426-80010	FUSE AUTO	2			5A	0.01	0.022
050	48100-55880	FUSE AUTO	2			10A	0.01	0.022
060	36919-56650	FUSE AUTO	3			20A	0.002	0.0044
070	52300-41630	FUSE AUTO	1			30A	0.01	0.022
080	53581-64150	BAND CORD	6				0.002	0.0044
090	55311-41260	BAND CORD	2				0.007	0.0154
100	01202-50620	BOLT	2				0.007	0.0154

silverhorn.co.uk

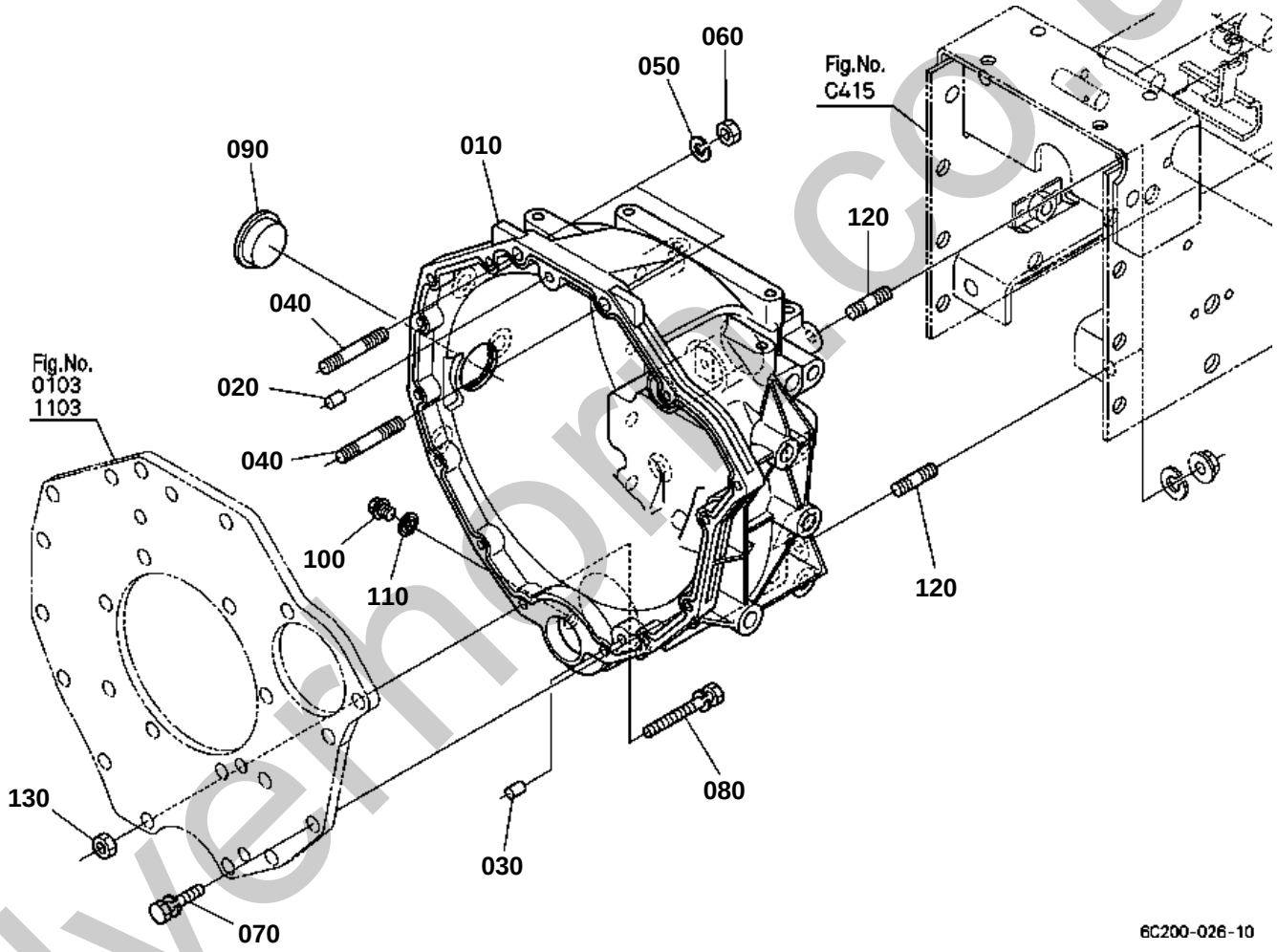

silverhorse.co.uk

CLUTCH HOUSING

↔ Interchangeable; ≠ not interchangeable; ← new for old; → old for new

REF.No	Part No.	Description	Q'ty	S.No.	I/C	REMARKS	Weight (kgf)	Weight (lb)
010	6C200-13110	HOUSING CLUTCH	1				0	0
020	05012-00814	PIN STRAIGHT	1				0.006	0.0132
030	66611-11160	PIN KNOCK	1				0.01	0.022
040	01517-51045	STUD	2				0.032	0.0704
050	04512-60100	WASHER SPRING	2				0.002	0.0044
060	02118-50100	NUT	2				0.005	0.011
070	01123-50830	BOLT	9				0.015	0.033
080	01123-50870	BOLT	2				0.029	0.0638
090	37410-13124	PLUG	1				0.02	0.044
100	01754-50812	BOLT FLANGE	1				0.01	0.022
110	04717-00800	WASHER WITH RUBBER	1				0.001	0.0022
120	01555-51225	STUD	4				0.039	0.0858
130	02114-50080	NUT	2				0.005	0.011

silverhorn.co.uk

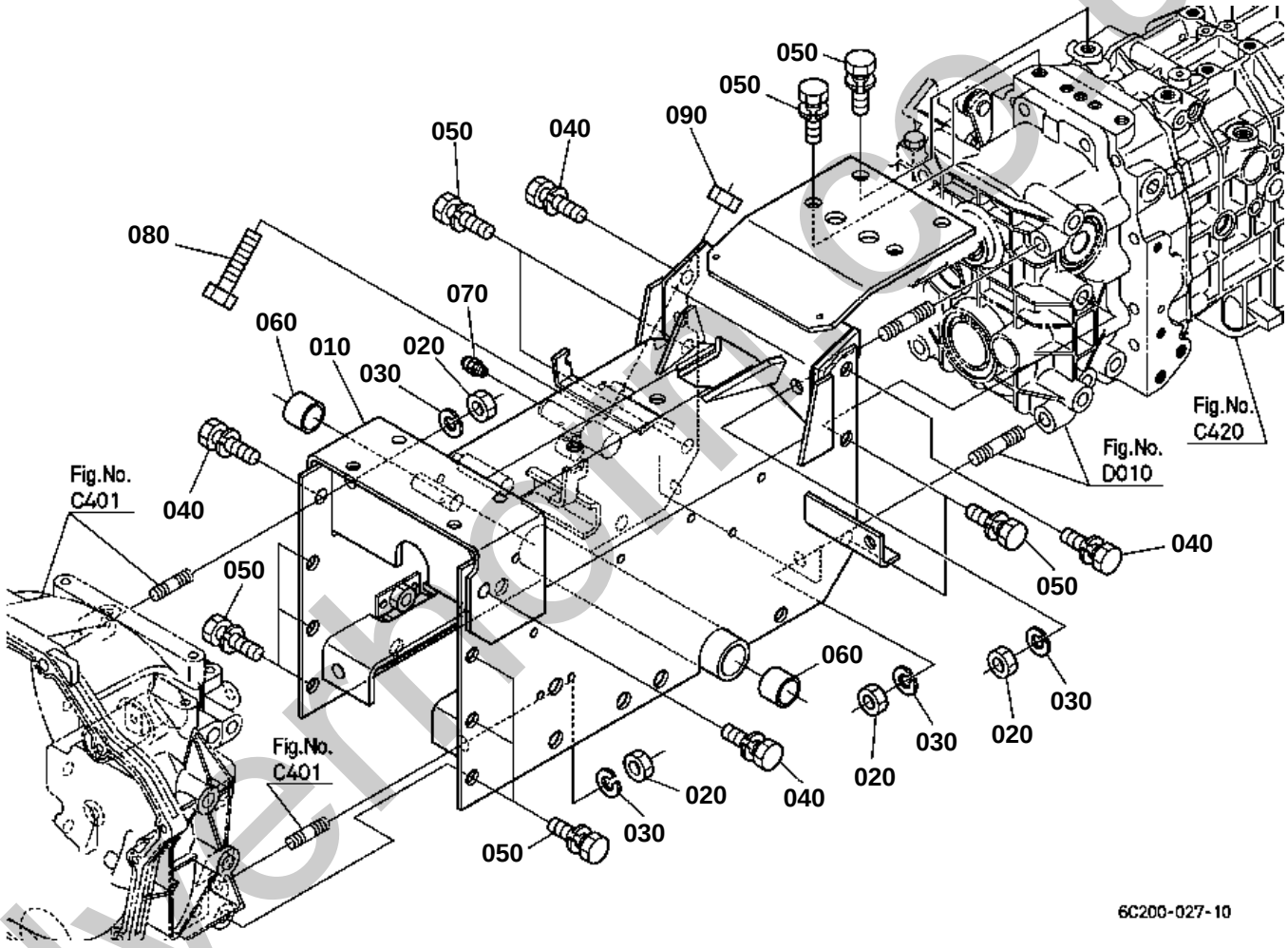

silverhorn.co.uk

CENTER FRAME

↔ Interchangeable; ≠ not interchangeable; ← new for old; → old for new

REF.No	Part No.	Description	Q'ty	S.No.	I/C	REMARKS	Weight (kgf)	Weight (lb)
010	6C200-51114	COMP.FRAME CENTER	1				0	0
020	02174-50120	NUT	8				0.01	0.022
030	04512-60120	WASHER SPRING	8				0.005	0.011
040	01123-51240	BOLT	4				0.048	0.1056
050	01123-51230	BOLT	14				0.04	0.088
060	08511-02515	BUSH	2				0.012	0.0264
070	06613-10675	NIPPLE GREASE	1				0.003	0.0066
080	66711-13320	BOLT ADJUSTING	1				0.028	0.0616
090	02118-50100	NUT	1				0.005	0.011

silverhorn.co.uk

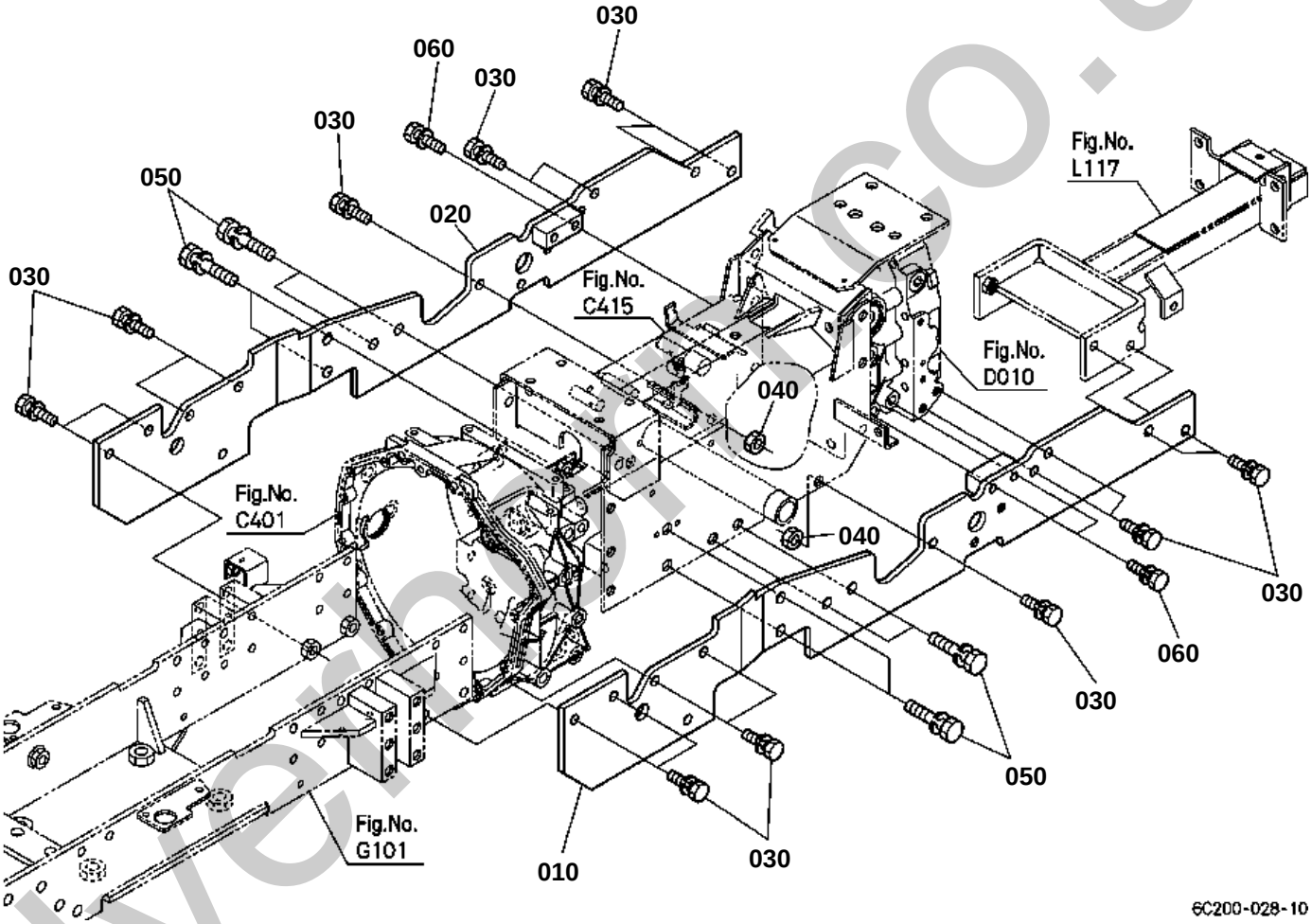

silverhill-co.uk

SUB FRAME

↔ Interchangeable; ≠ not interchangeable; ← new for old; → old for new

REF.No	Part No.	Description	Q'ty	S.No.	I/C	REMARKS	Weight (kgf)	Weight (lb)
010	6C200-51132	SUB FRAME L	1				0	0
020	6C200-51142	SUB FRAME R	1				0	0
030	01123-51235	BOLT	18				0.041	0.0902
040	02114-50120	NUT	2				0.011	0.0242
050	01133-51450	BOLT	8				0	0
060	01123-51255	BOLT	3				0.055	0.121

silverhorn.co.uk

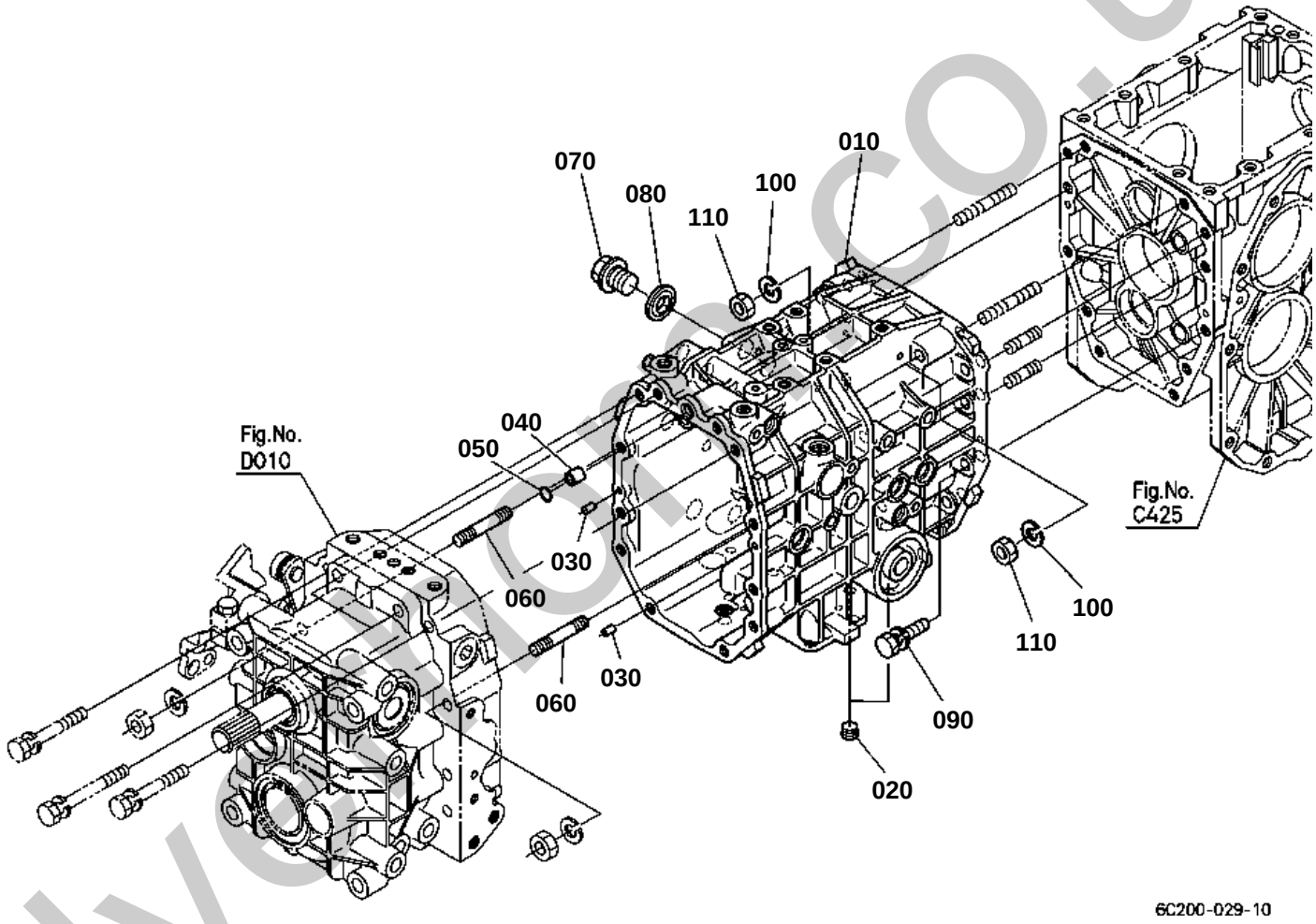

silvermac.co.uk

↔ Interchangeable; ≠ not interchangeable; ← new for old; → old for new

REF.No	Part No.	Description	Q'ty	S.No.	I/C	REMARKS	Weight (kgf)	Weight (lb)
010	6C200-11110	CASE TRANSMISSION	1				0	0
020	31351-37160	PLUG	2				0.003	0.0066
030	05012-00614	PIN STRAIGHT	2				0.004	0.0088
040	11420-94940	PIPE KNOCK	1				0.001	0.0022
050	04811-10100	O RING	1				0.001	0.0022
060	01555-51070	STUD	2				0.049	0.1078
070	06311-55030	PLUG	1				0.05	0.11
080	04717-01700	WASHER WITH RUBBER	1				0.003	0.0066
090	01123-51040	BOLT	7				0.03	0.066
100	04512-60100	WASHER SPRING	5				0.002	0.0044
110	02118-50100	NUT	5				0.005	0.011

silverhorn.co.uk

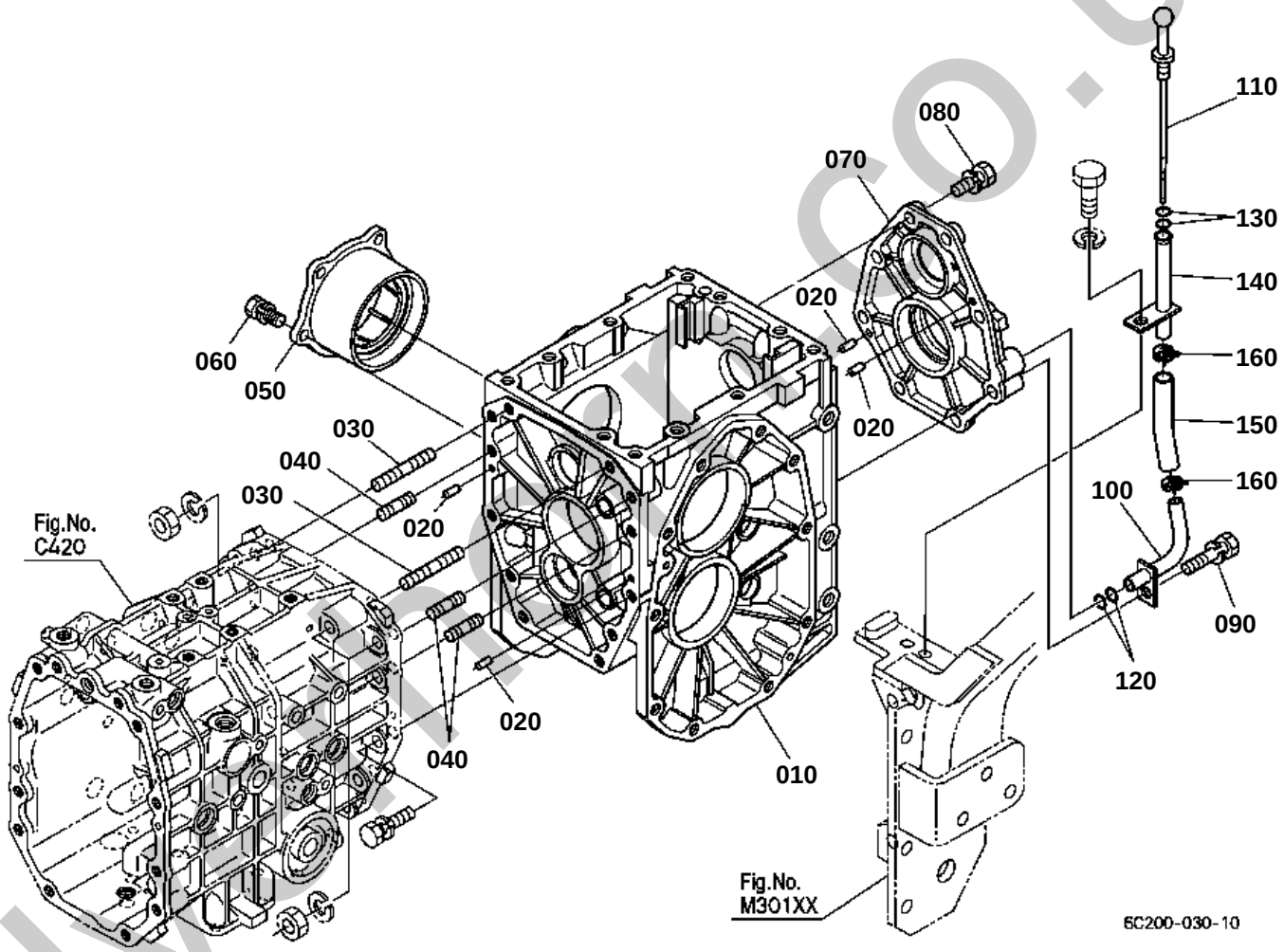

silvermerco.uk

DIFFERENTIAL GEAR CASE

↔ Interchangeable; ≠ not interchangeable; ← new for old; → old for new

REF.No	Part No.	Description	Q'ty	S.No.	I/C	REMARKS	Weight (kgf)	Weight (lb)
010	6A700-11172	CASE DIFF.GEAR	1				6.5	14.3
020	05012-00614	PIN STRAIGHT	4				0.004	0.0088
030	01555-51065	STUD	2				0.048	0.1056
040	01555-51035	STUD	3				0.029	0.0638
050	6A600-11810	HOLDER DIFF.BRG.	1				0.25	0.55
060	01123-50825	BOLT	4				0.013	0.0286
070	6A700-12210	COVER PTO	1				0.54	1.188
080	01123-51030	BOLT	7				0.025	0.055
090	01123-51050	BOLT	1				0.035	0.077
100	6C200-11150	PIPE OIL GAUGE	1				0	0
110	6C040-11160	GAUGE OIL	1				0.01	0.022
120	04816-00120	O RING	2				0.001	0.0022
130	04816-00060	O RING	2				0.001	0.0022
140	6C200-11160	PIPE OIL GAUGE	1				0	0
150	6C200-11190	HOSE	1				0	0
160	09318-88155	CLAMP HOSE	2				0.005	0.011

silverhorn.co.uk

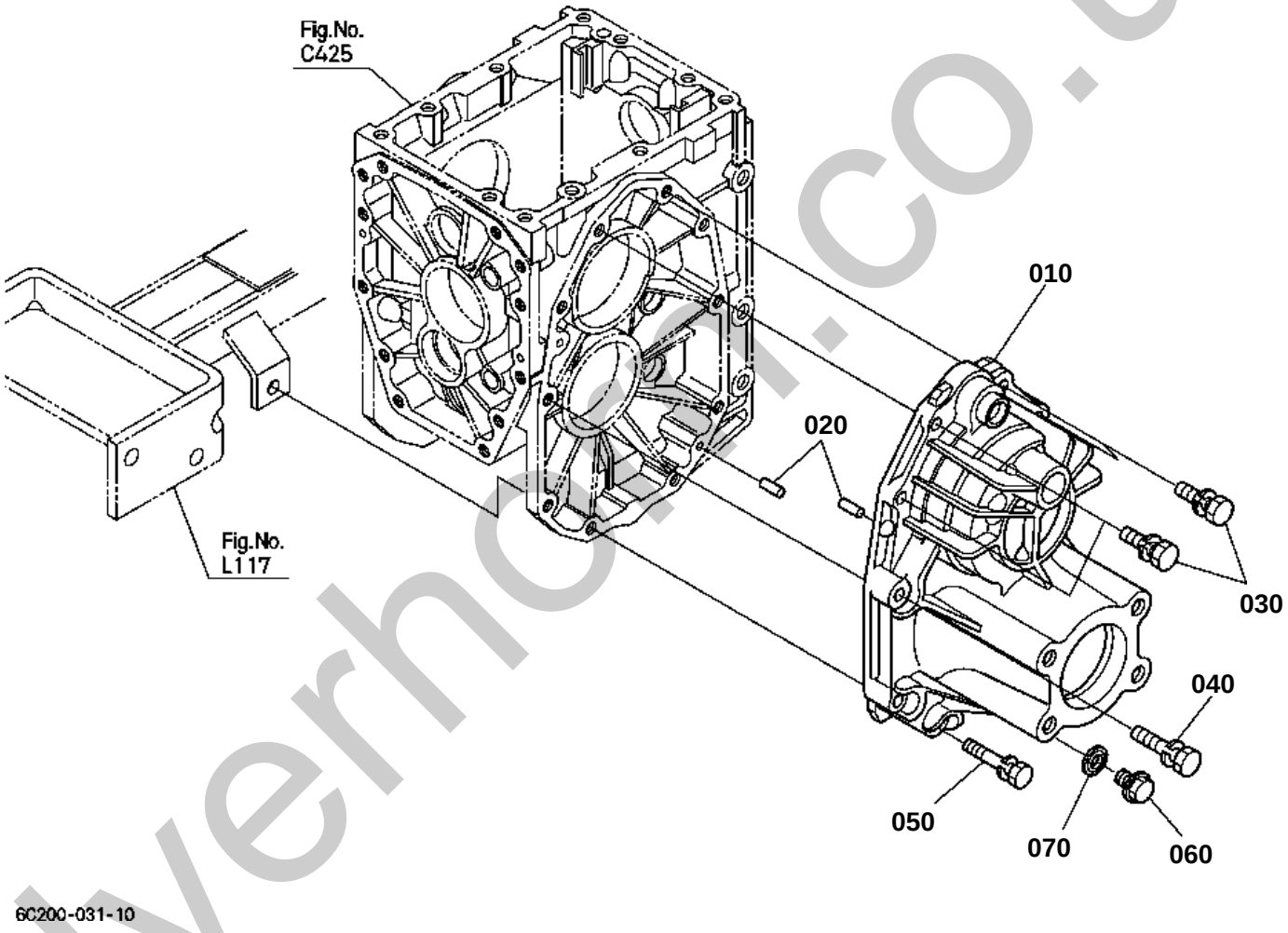

silverhoe.co.uk

REAR AXLE CASE LH

↔ Interchangeable; ≠ not interchangeable; ← new for old; → old for new

REF.No	Part No.	Description	Q'ty	S.No.	I/C	REMARKS	Weight (kgf)	Weight (lb)
010	K3511-12620	CASE AXLE RH	1				2.32	5.104
020	05012-00614	PIN STRAIGHT	2				0.004	0.0088
030	01123-51035	BOLT	4				0.025	0.055
040	01123-51050	BOLT	5				0.035	0.077
050	01133-51075	BOLT	1				0.03	0.066
060	01774-51212	BOLT FLANGE	1				0.028	0.0616
070	04717-01200	WASHER WITH RUBBER	1				0.002	0.0044

silverhorn.co.uk

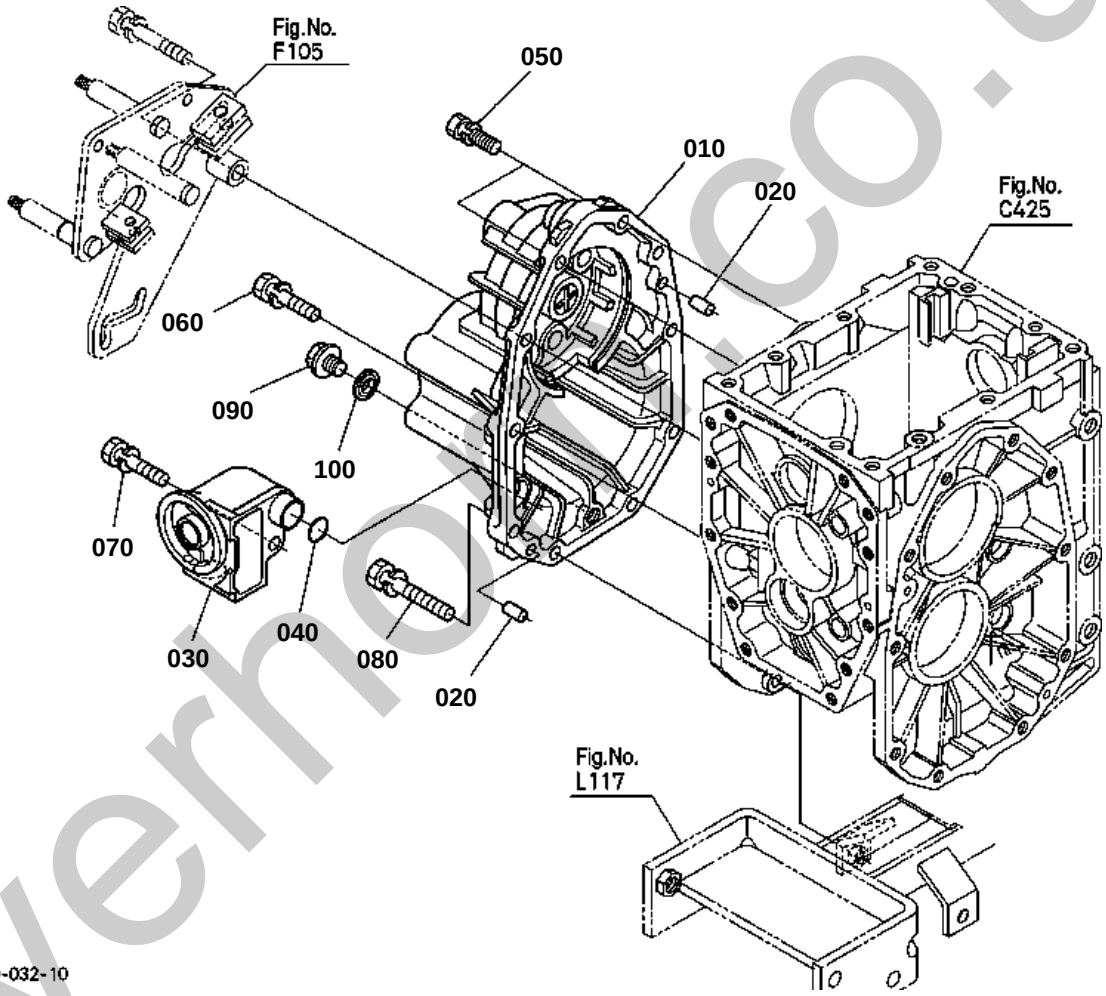

silverhoe.co.uk

REAR AXLE CASE RH

↔ Interchangeable; ≠ not interchangeable; ← new for old; → old for new

REF.No	Part No.	Description	Q'ty	S.No.	I/C	REMARKS	Weight (kgf)	Weight (lb)
010	6C200-12620	CASE AXLE RH	1				0	0
020	05012-00614	PIN STRAIGHT	2				0.004	0.0088
030	6C200-12630	BRACKET FILTER	1				0	0
040	04811-10250	O RING	1				0.001	0.0022
050	01123-51035	BOLT	2				0.025	0.055
060	01123-51050	BOLT	4				0.035	0.077
070	01123-51055	BOLT	1				0.038	0.0836
080	01133-51075	BOLT	1				0.03	0.066
090	01774-51212	BOLT FLANGE	1				0.028	0.0616
100	04717-01200	WASHER WITH RUBBER	1				0.002	0.0044

silverhorn.co.uk

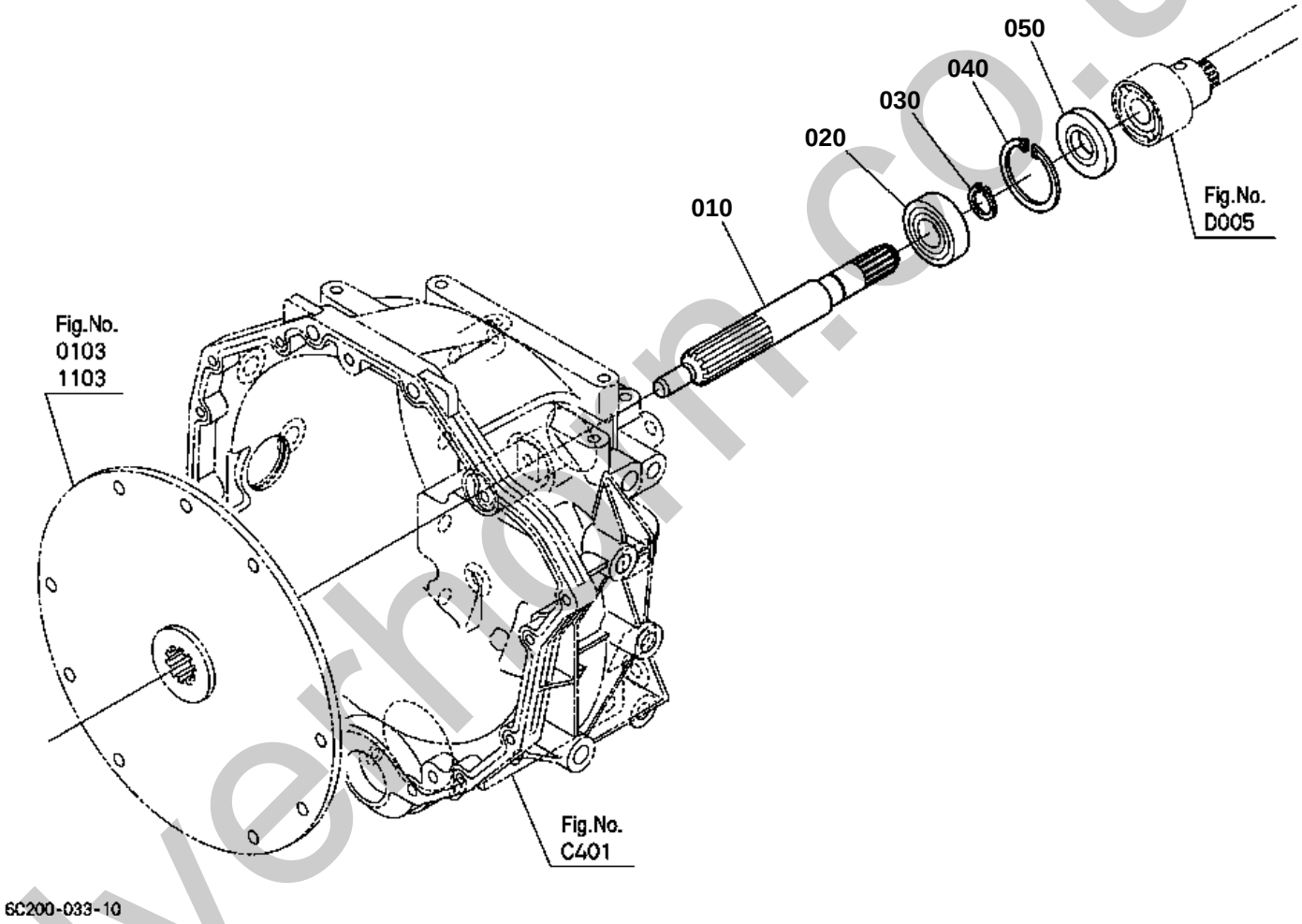

silverhorn.co.uk

CLUTCH SHAFT

↔ Interchangeable; ≠ not interchangeable; ← new for old; → old for new

REF.No	Part No.	Description	Q'ty	S.No.	I/C	REMARKS	Weight (kgf)	Weight (lb)
010	6C200-13310	SHAFT CLUTCH	1				0	0
020	08141-06204	BEARING BALL	1				0.101	0.2222
030	04612-00200	CIR CLIP EXTERNAL	1				0.001	0.0022
040	04611-00470	CIR CLIP INTERNAL	1				0.006	0.0132
050	09500-20477	SEAL OIL	1				0.018	0.0396

silverhorn.co.uk

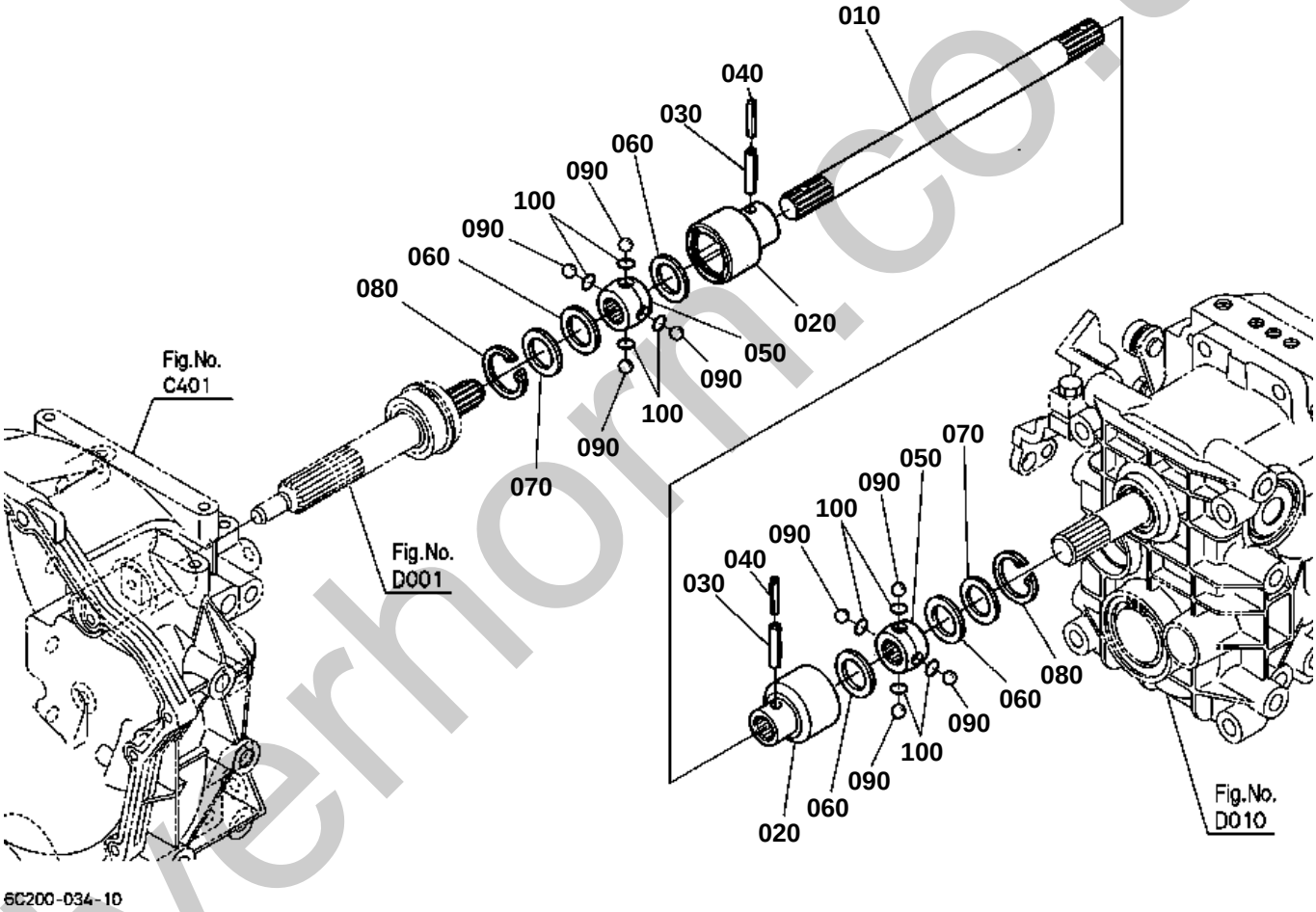

silverhorn.co.uk

PROPELLER SHAFT

↔ Interchangeable; ≠ not interchangeable; ← new for old; → old for new

REF.No	Part No.	Description	Q'ty	S.No.	I/C	REMARKS	Weight (kgf)	Weight (lb)
010	6C200-13610	SHAFT PROPELLING	1				0	0
020	67111-13710	COUPLING BALL OUTER	2				0.225	0.495
030	05411-00630	PIN SPRING	2				0.004	0.0088
040	T0270-15310	PIN SPRING	2				0.002	0.0044
050	67211-14133	COUPLING BALL INNER	2				0.075	0.165
060	67111-13730	GASKET BALL JOINT	4				0.002	0.0044
070	67111-13740	SUPPORT GASKET	2				0.004	0.0088
080	04611-00350	CIR CLIP INTERNAL	2				0.003	0.0066
090	07715-00803	BALL	8				0.004	0.0088
100	04811-10060	O RING	8				0.001	0.0022

silverhorn.co.uk

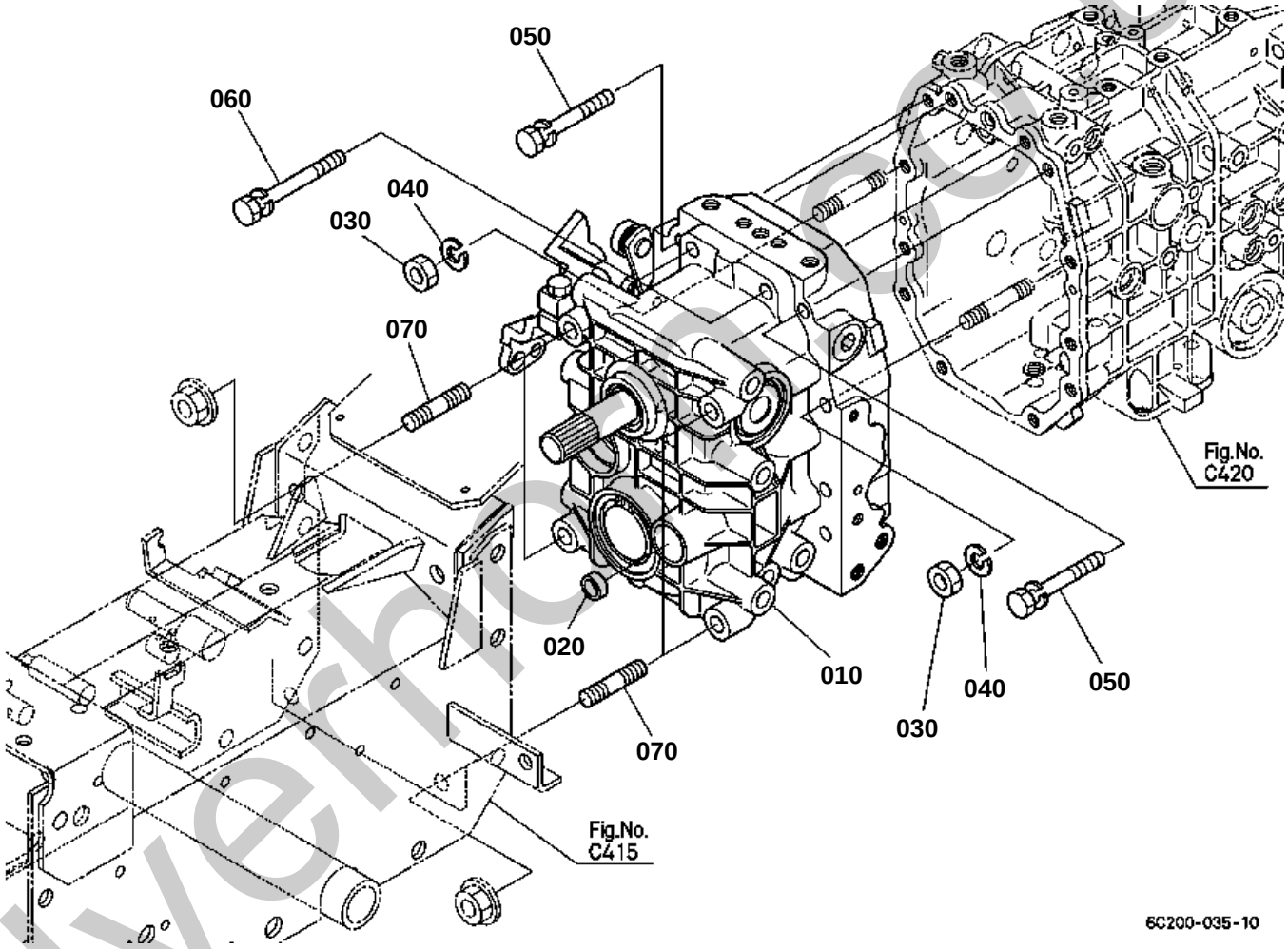

silverhoe.co.uk

↔ Interchangeable; ≠ not interchangeable; ← new for old; → old for new

REF.No	Part No.	Description	Q'ty	S.No.	I/C	REMARKS	Weight (kgf)	Weight (lb)
010	6C200-11603	ASSY HST	1				0	0
020	06311-85018	CAP SEALING	1				0.004	0.0088
030	02118-50100	NUT	2				0.005	0.011
040	04512-60100	WASHER SPRING	2				0.002	0.0044
050	01123-51075	BOLT	8				0.05	0.11
060	01123-51090	BOLT	2				0.055	0.121
070	01555-51225	STUD	4				0.039	0.0858

silverhorn.co.uk

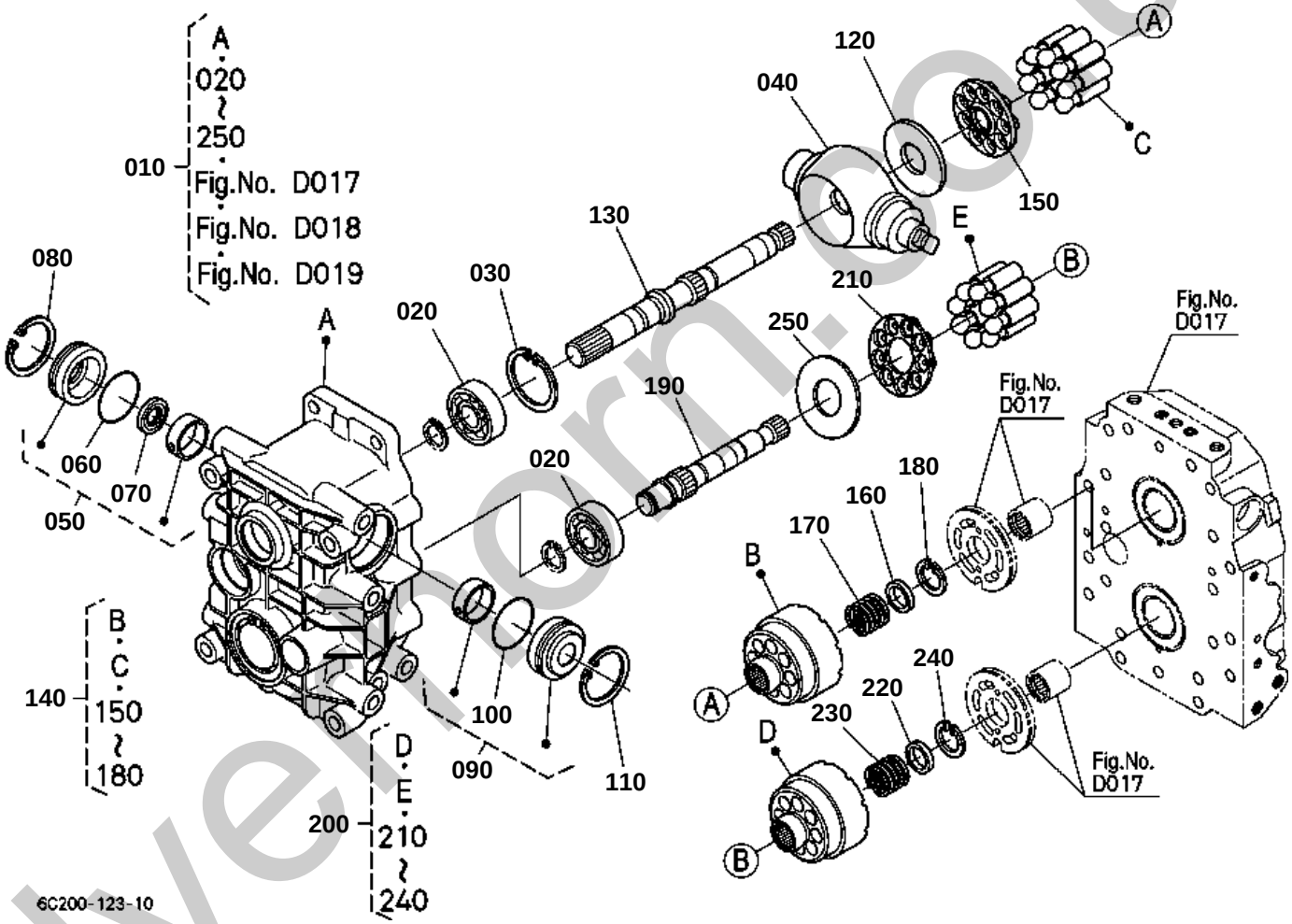

silvermorn.co.uk

↔ Interchangeable; ≠ not interchangeable; ← new for old; → old for new

REF.No	Part No.	Description	Q'ty	S.No.	I/C	REMARKS	Weight (kgf)	Weight (lb)
010	6C200-11603	ASSY HST	1				0	0
020	37410-14320	BEARING BALL	2				0.145	0.319
030	04611-00520	CIR CLIP INTERNAL	1				0.009	0.0198
040	6A710-11710	PLATE	1				1	2.2
050	6A110-35020	ASSY COVER A	1				0.24	0.528
060	04811-50550	O RING	1				0.002	0.0044
070	6A110-35140	SEAL OIL	1				0.009	0.0198
080	04611-00620	CIR CLIP INTERNAL	1				0.011	0.0242
090	6A110-35030	ASSY COVER B	1				0.24	0.528
100	04811-50550	O RING	1				0.002	0.0044
110	04611-00620	CIR CLIP INTERNAL	1				0.011	0.0242
120	32721-35150	COLLAR THRUST	1				0.026	0.0572
130	6A710-11720	SHAFT	1				0.47	1.034
140	32721-35040	ASSY BLOCK CYL.	1				1.09	2.398
150	32721-35180	PLATE RETAINER	1				0.02	0.044
160	66415-39240	HOLDER SPRING	1				0.004	0.0088
170	66415-39250	SPRING	1				0.005	0.011
180	66415-39470	CIR CLIP INTERNAL	1				0.02	0.044
190	6A710-11810	SHAFT	1				0.45	0.99
200	32721-35070	ASSY BLOCK CYL.	1				1.09	2.398
210	32721-35180	PLATE RETAINER	1				0.02	0.044
220	66415-39240	HOLDER SPRING	1				0.004	0.0088
230	66415-39250	SPRING	1				0.005	0.011
240	66415-39470	CIR CLIP INTERNAL	1				0.02	0.044
250	32721-35150	COLLAR THRUST	1				0.026	0.0572

silverhorn.co.uk

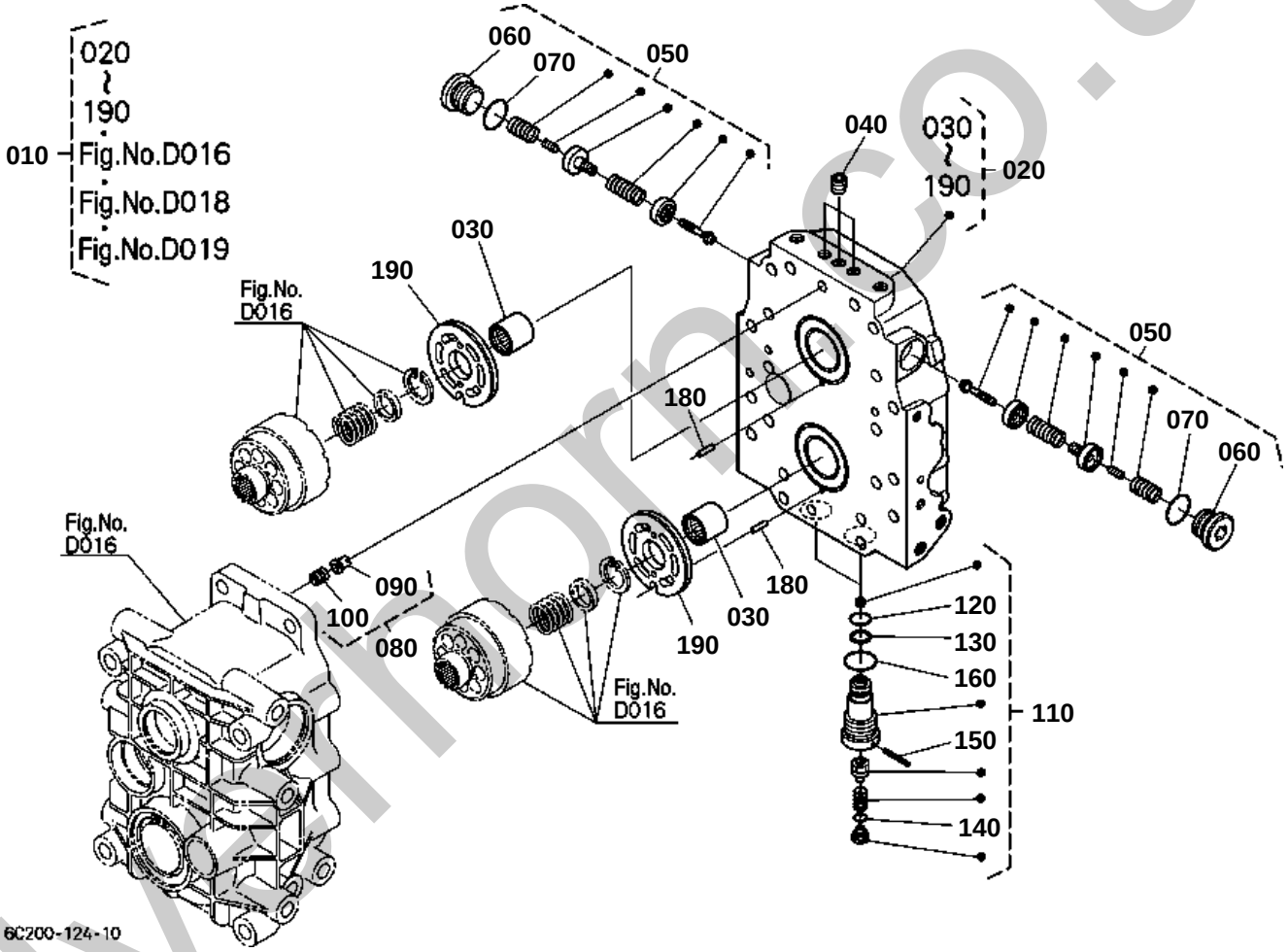

silvermorn.co.uk

↔ Interchangeable; ≠ not interchangeable; ← new for old; → old for new

REF.No	Part No.	Description	Q'ty	S.No.	I/C	REMARKS	Weight (kgf)	Weight (lb)
010	6C200-11603	ASSY HST	1				0	0
020	6A710-11902	ASSY COVER PORTBLOCK	1				12	26.4
030	6A610-35320	BEARING NEEDLE	2				0.025	0.055
040	K7001-39620	PLUG	3				0.005	0.011
050	K7561-14900	ASSY VALVE RELIEF F	2				0.08	0.176
060	5H600-11820	PLUG	2				0.005	0.011
070	04817-00180	O RING	2				0.003	0.0066
080	37590-39900	ASSY VALVE RELIEF	1				0.007	0.0154
090	66363-39710	POPPET L	1				0.006	0.0132
100	66363-39720	SPRING	1				0.01	0.022
110	6C070-11650	ASSY VALVE NUETRAL	2				0.1	0.22
120	04817-00120	O RING	2				0.001	0.0022
130	66363-39630	RING BACK UP	2				0.001	0.0022
140	04817-00100	O RING	2				0.001	0.0022
150	05411-00325	PIN SPRING	2				0.001	0.0022
160	04817-00180	O RING	2				0.003	0.0066
170	99999-99999	BLANK	0				0	0
180	05411-00414	PIN SPRING	2				0.001	0.0022
190	6A710-11740	PLATE VALVE	2				0.125	0.275

silverhorn.co.uk

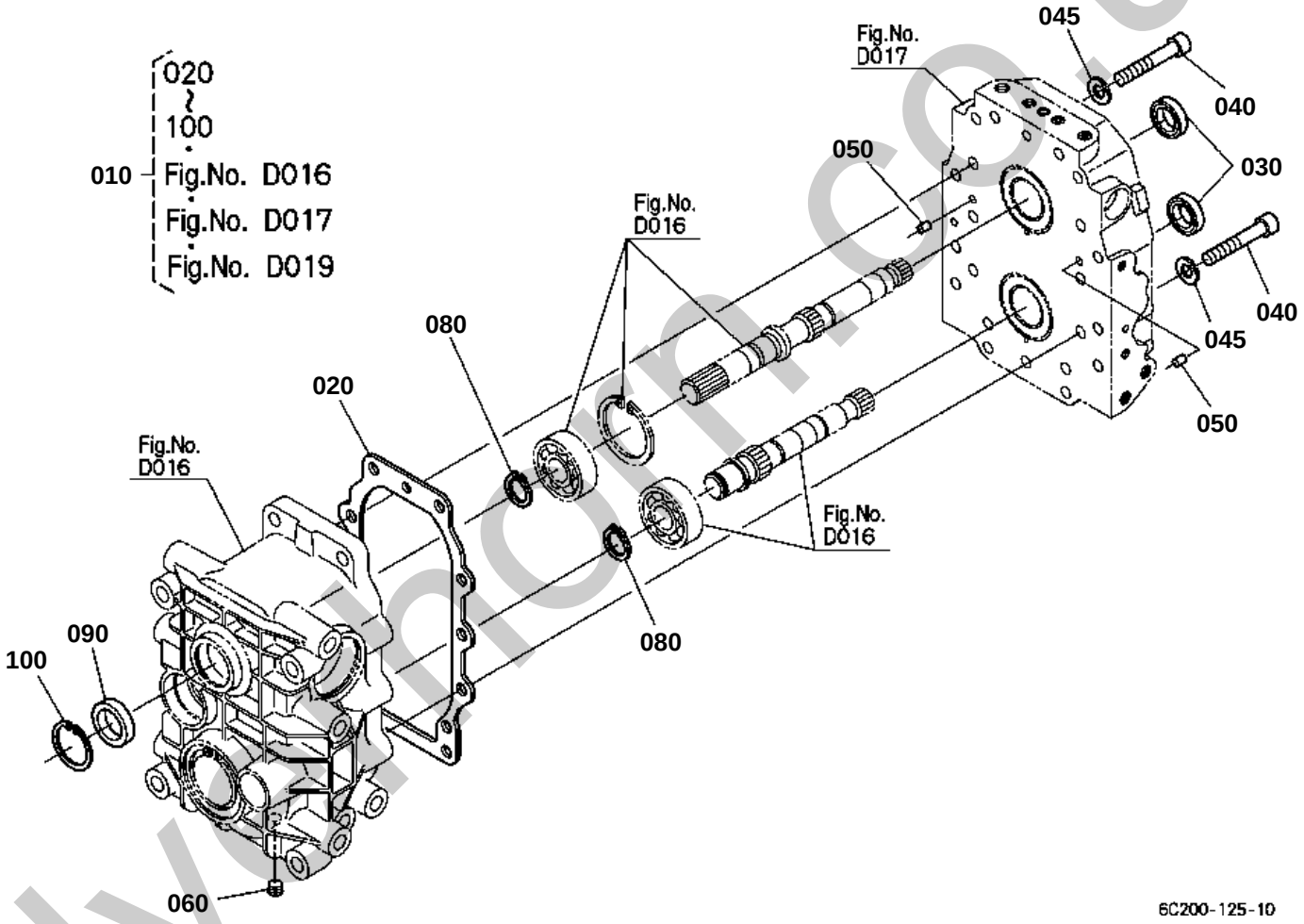

silvermoon.co.uk

↔ Interchangeable; ≠ not interchangeable; ← new for old; → old for new

REF.No	Part No.	Description	Q'ty	S.No.	I/C	REMARKS	Weight (kgf)	Weight (lb)
010	6C200-11603	ASSY HST	1				0	0
020	6A710-11622	GASKET	1				0.005	0.011
030	32721-35380	SEAL OIL	2				0.002	0.0044
040	01311-11060	BOLT HEX-SOC-HD	9				0.045	0.099
045	66415-39560	WASHER SPRING	9				0.003	0.0066
050	K7561-11180	PIN STRAIGHT	2				0	0
060	32721-35450	PLUG	1				0.002	0.0044
070	99999-99999	BLANK	0				0	0
080	04612-00200	CIR CLIP EXTERNAL	2				0.001	0.0022
090	66363-39560	SEAL OIL	1				0.01	0.022
100	04611-00350	CIR CLIP INTERNAL	1				0.003	0.0066

silverhorn.co.uk

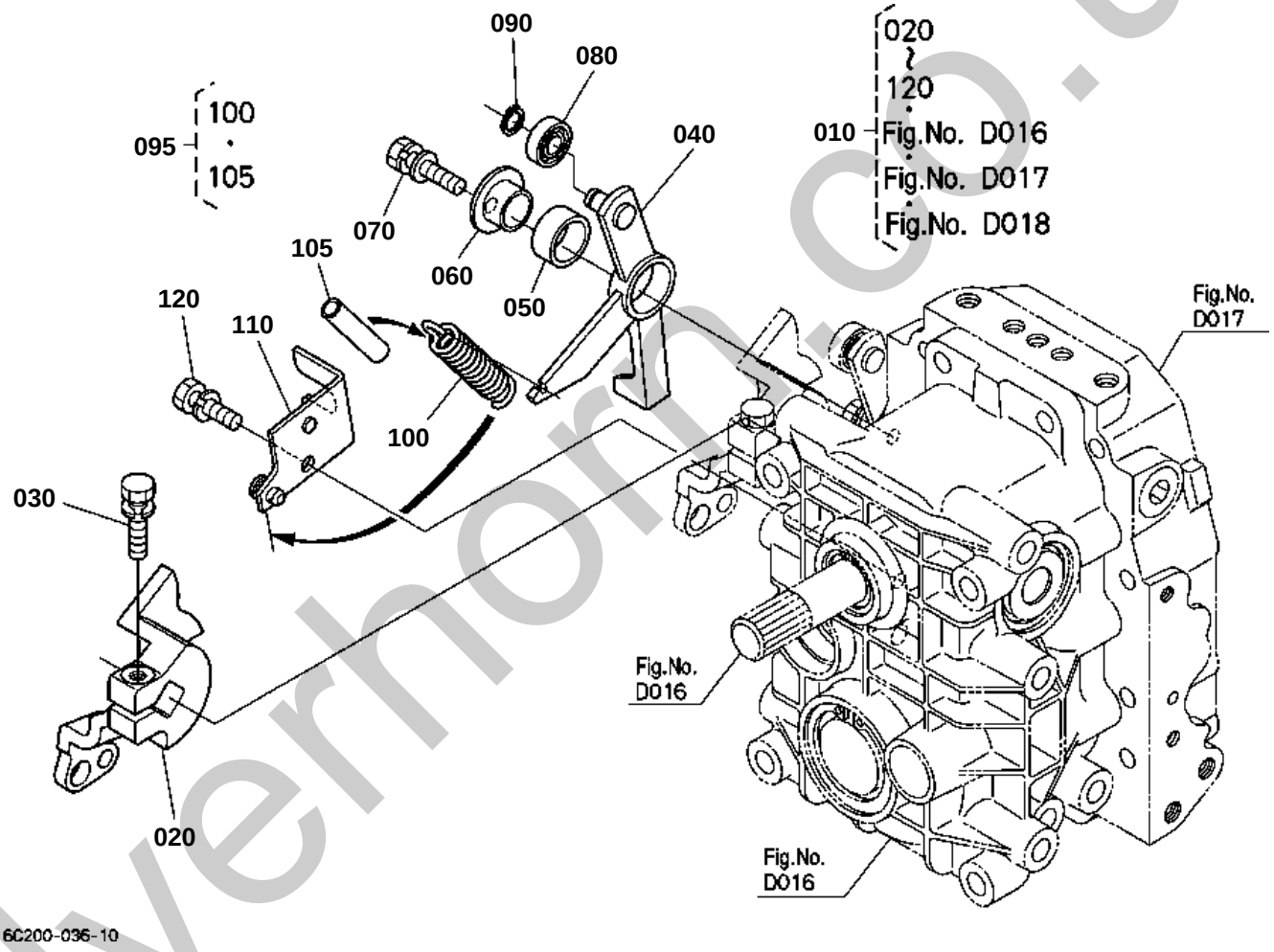

silverhorn.co.uk

↔ Interchangeable; ≠ not interchangeable; ← new for old; → old for new

REF.No	Part No.	Description	Q'ty	S.No.	I/C	REMARKS	Weight (kgf)	Weight (lb)
010	6C200-11603	ASSY HST	1				0	0
020	6C200-18110	HOLDER NEUTRAL	1				0	0
030	01123-50835	BOLT	1				0.02	0.044
040	6C200-18152	ARM NEUTRAL	1				0	0
050	66204-43572	BUSH	1				0.002	0.0044
060	66204-43352	SHAFT HOLDER	1				0.072	0.1584
070	01125-50835	BOLT	1				0.017	0.0374
080	08121-06000	BEARING BALL	1				0.02	0.044
090	04612-00100	CIR CLIP EXTERNAL	1				0.001	0.0022
095	6C200-18160	ASSY SPRING	1				0	0
100	6C050-43470	SPRING	1				0.047	0.1034
105	6C200-18180	TUBE	1				0	0
110	6C200-18340	STAY NEUTRAL SWITCH	1				0	0
120	01123-50820	BOLT	1				0.011	0.0242

silverhorn.co.uk

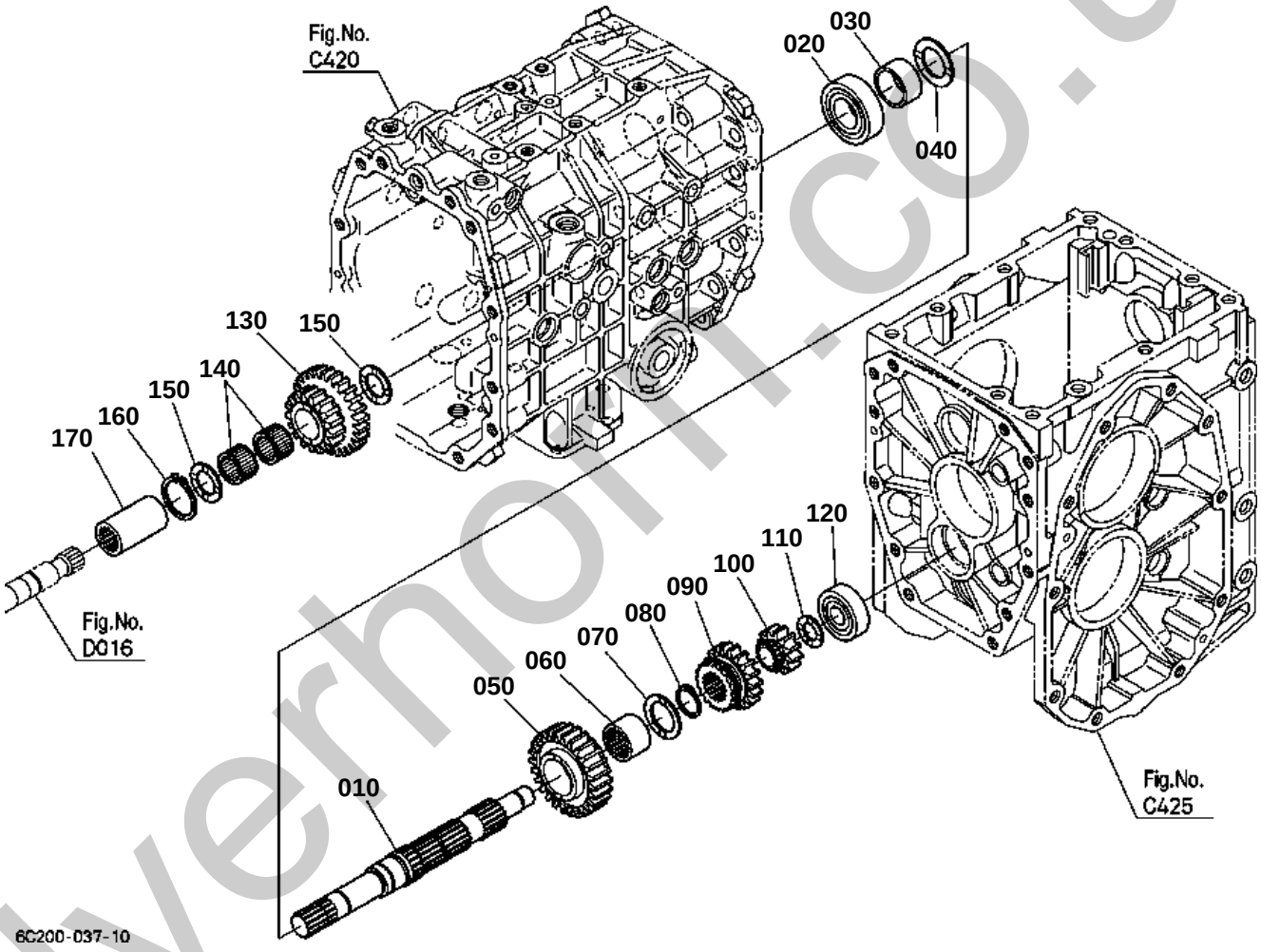

silverhoff.co.uk

RANGE GEAR SHAFT

↔ Interchangeable; ≠ not interchangeable; ← new for old; → old for new

REF.No	Part No.	Description	Q'ty	S.No.	I/C	REMARKS	Weight (kgf)	Weight (lb)
010	6C200-14710	SHAFT RANGE GEAR	1				0	0
020	6A700-16570	BEARING BALL	1				0.127	0.2794
030	6C200-14760	COLLAR	1				0	0
040	67061-14380	COLLAR	1				0.01	0.022
050	6C200-14720	GEAR	1			26T	0	0
060	6A700-14870	RING INNER	1				0.04	0.088
070	6A700-14880	COLLAR THRUST	1				0.009	0.0198
080	6C200-14860	CIR CLIP EXTERNAL	1				0	0
090	6C200-14730	GEAR	1			18T	0	0
100	6C200-14740	GEAR	1			12T	0	0
110	67910-12330	COLLAR	1				0.006	0.0132
120	6A700-16610	BEARING BALL	1				0.08	0.176
130	6C200-14750	GEAR MID	1			17-26T	0	0
140	6C200-14770	BEARING NEEDLE	2				0	0
150	61361-14330	COLLAR	2				0.007	0.0154
160	04612-00200	CIR CLIP EXTERNAL	1				0.001	0.0022
170	6C050-14520	COUPLING	1				0.099	0.2178

silverhorn.co.uk

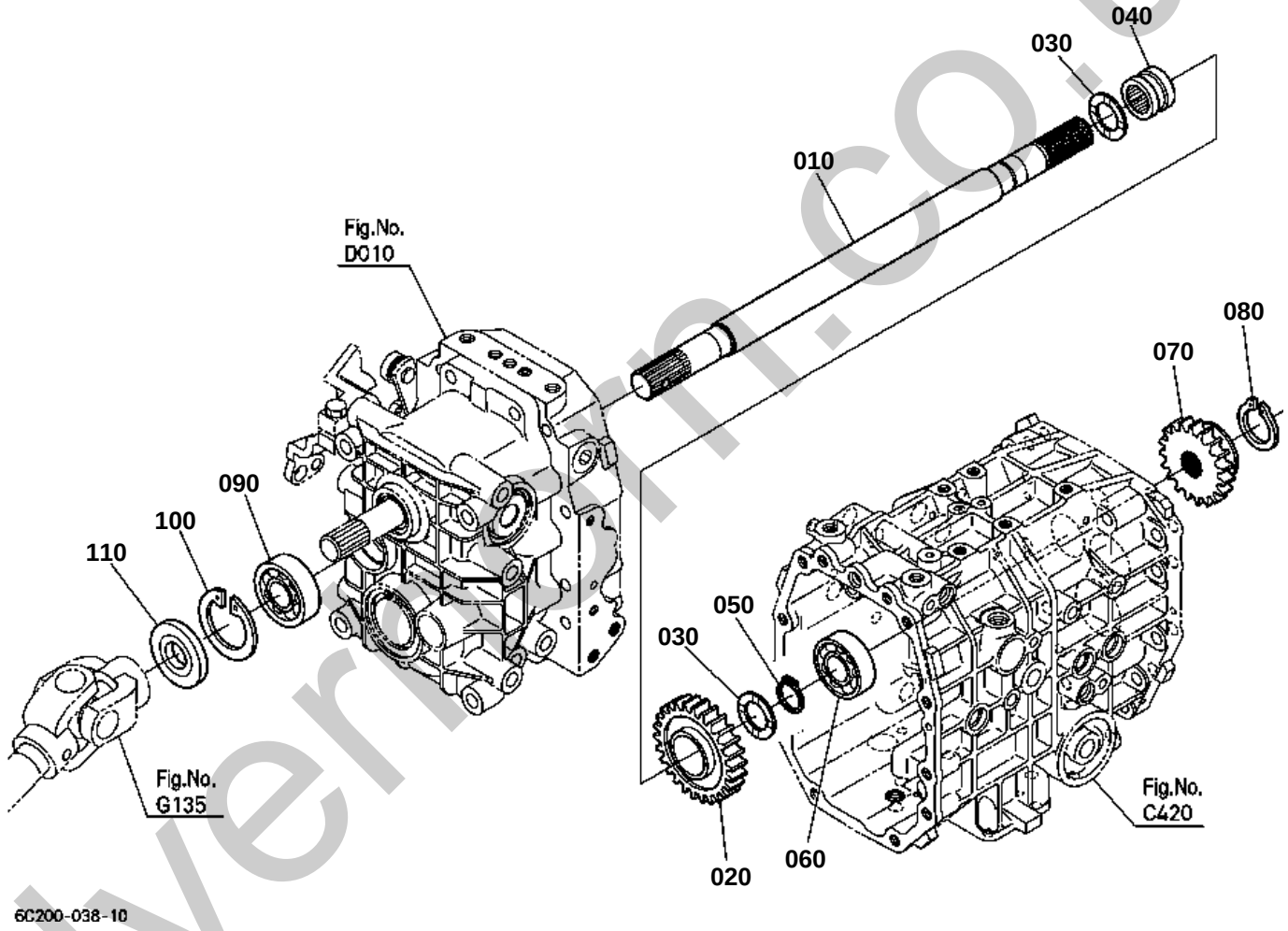

silvermorn.co.uk

↔ Interchangeable; ≠ not interchangeable; ← new for old; → old for new

REF.No	Part No.	Description	Q'ty	S.No.	I/C	REMARKS	Weight (kgf)	Weight (lb)
010	6C200-16110	SHAFT REVERSE	1				0	0
020	6C200-16320	GEAR 4WD	1			26T	0	0
030	61361-14330	COLLAR	2				0.007	0.0154
040	6C200-16330	BEARING NEEDLE	1				0	0
050	15875-24320	RING SNAP	1				0.003	0.0066
060	52300-16180	BEARING	1				0.103	0.2266
070	6A700-16350	GEAR 4WD	1			19T	0.25	0.55
080	04612-00190	CIR CLIP EXTERNAL	1				0.001	0.0022
090	52300-21660	BEARING	1				0.07	0.154
100	04611-00420	CIR CLIP INTERNAL	1				0.006	0.0132
110	09500-20428	SEAL OIL	1				0.012	0.0264

silverhorn.co.uk

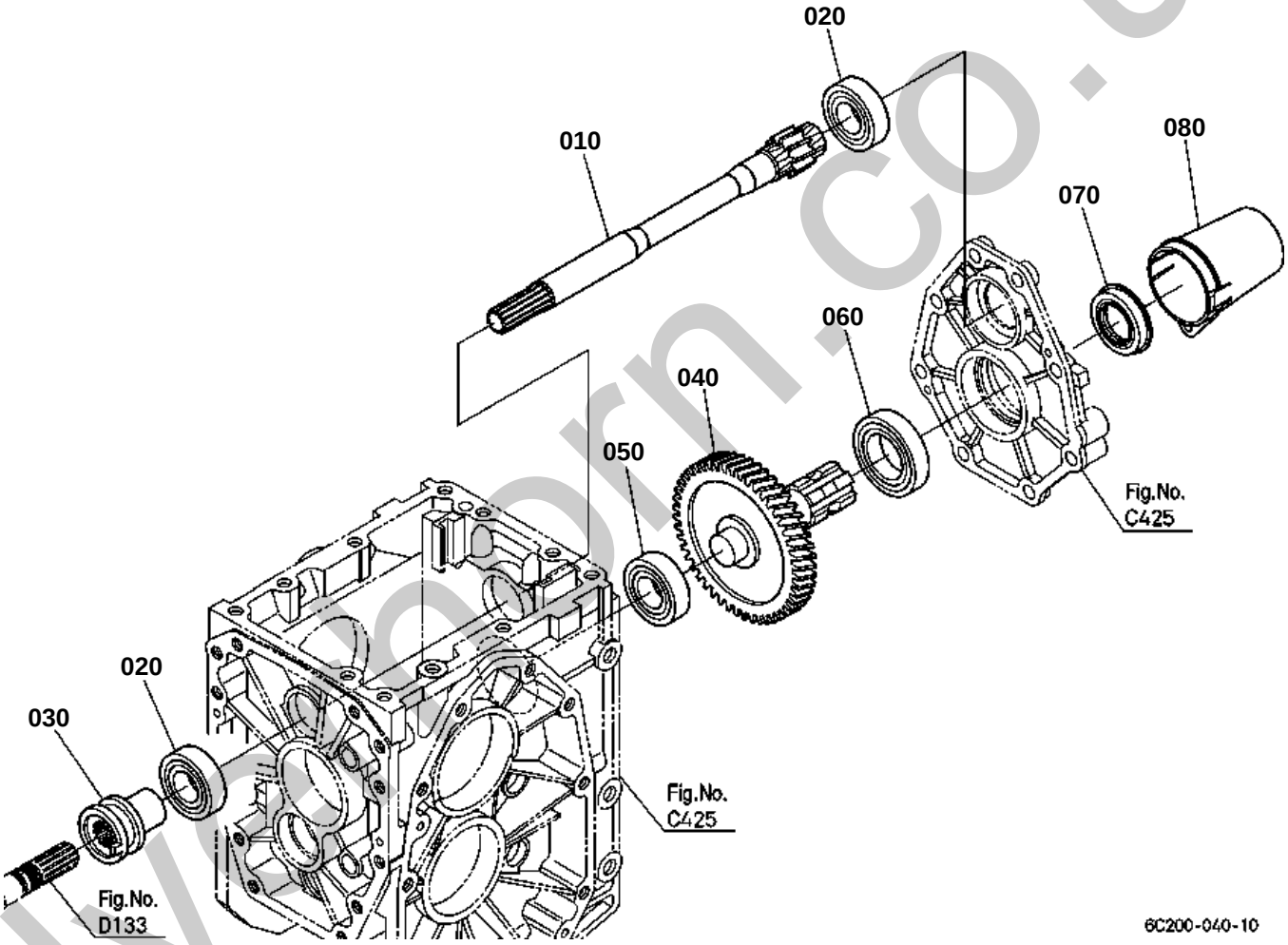

silvermorn.co.uk

PTO DRIVE SHAFT

↔ Interchangeable; ≠ not interchangeable; ← new for old; → old for new

REF.No	Part No.	Description	Q'ty	S.No.	I/C	REMARKS	Weight (kgf)	Weight (lb)
010	6C220-14412	SHAFT PTO DRIVE	1			10T	0	0
020	08101-06205	BEARING BALL	2				0.14	0.308
030	6C200-14422	SHIFTER REAR PTO	1				0	0
040	6C220-14510	SHAFT PTO GEAR	1			48T	0	0
050	08101-06205	BEARING BALL	1				0.14	0.308
060	08101-06007	BEARING BALL	1				0.16	0.352
070	37410-16550	SEAL OIL	1				0.03	0.066
080	37410-63112	CAP PTO SHAFT	1				0.055	0.121

silverhorn.co.uk

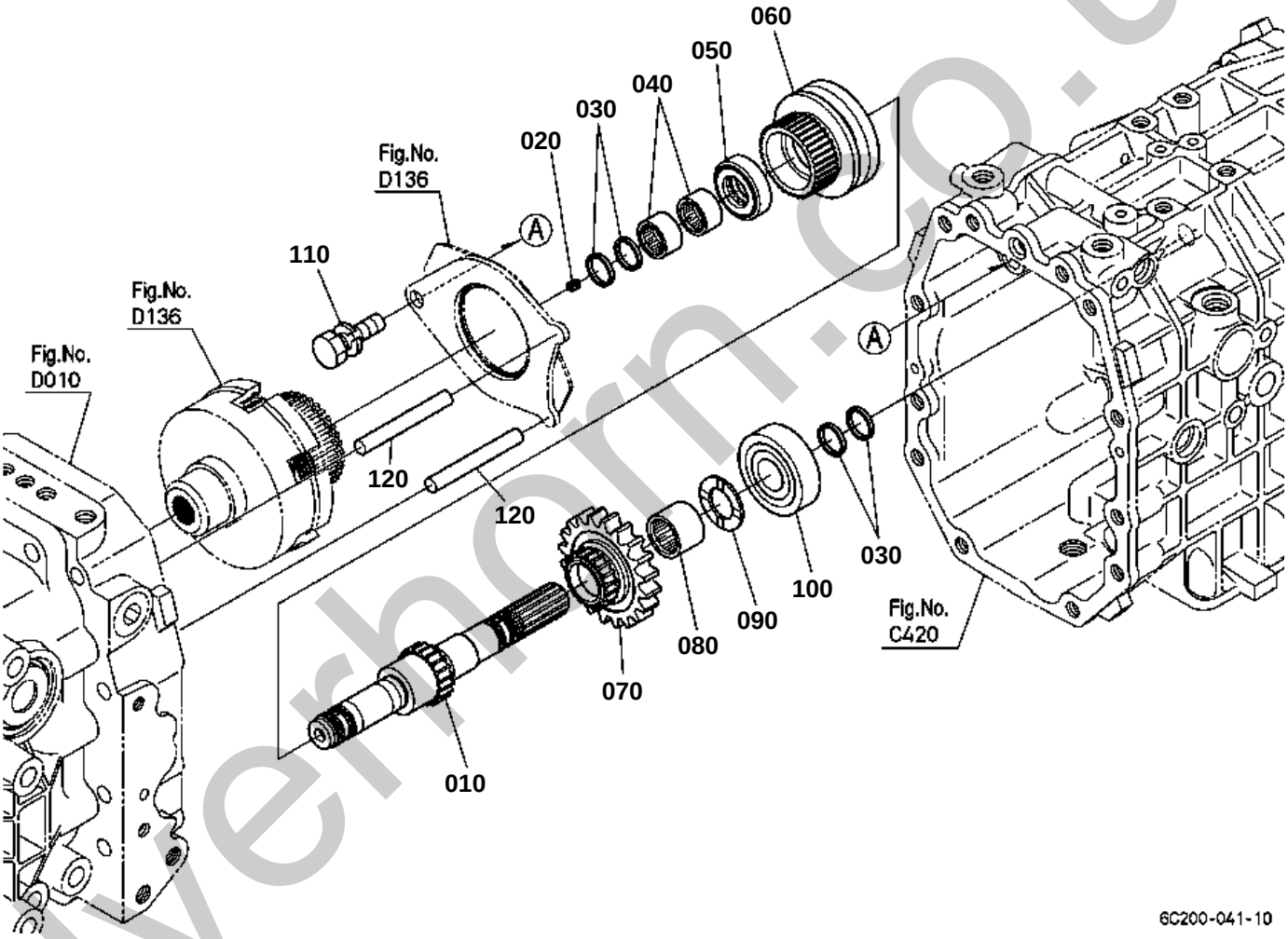

silverthorn.co.uk

PTO CLUTCH SHAFT

↔ Interchangeable; ≠ not interchangeable; ← new for old; → old for new

REF.No	Part No.	Description	Q'ty	S.No.	I/C	REMARKS	Weight (kgf)	Weight (lb)
010	6C200-14210	SHAFT PTO CLUTCH	1				0	0
020	3F740-40330	PLUG	1				0.002	0.0044
030	59240-15850	RING SEAL	4				0.005	0.011
040	08822-02413	BEARING NEEDLE	2				0.01	0.022
050	34152-56250	BEARING THRUST	1				0.051	0.1122
060	6C200-14260	SHIFTER PTO	1				0	0
070	6C200-14270	GEAR MID	1			25T	0	0
080	08822-22720	BEARING NEEDLE	1				0.025	0.055
090	62252-14250	COLLAR	1				0.01	0.022
100	08101-06304	BEARING BALL	1				0.146	0.3212
110	01123-51025	BOLT	1				0.02	0.044
120	6C200-14290	SHAFT PLATE	2				0	0

silverhorn.co.uk

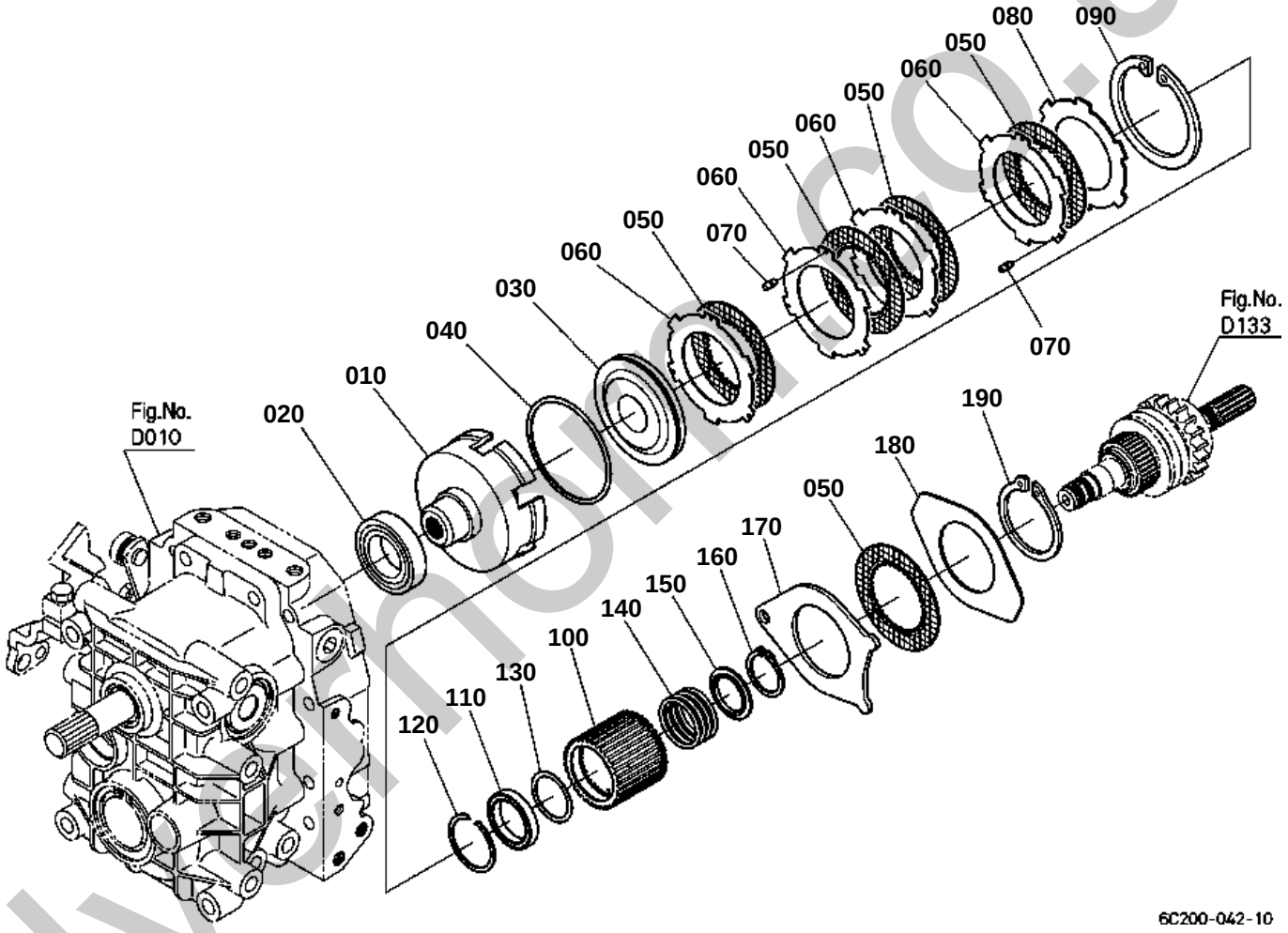

silvermoon.co.uk

↔ Interchangeable; ≠ not interchangeable; ← new for old; → old for new

REF.No	Part No.	Description	Q'ty	S.No.	I/C	REMARKS	Weight (kgf)	Weight (lb)
010	6C200-14220	CASE PTO CLUTCH	1				0	0
020	08101-06007	BEARING BALL	1				0.16	0.352
030	6C200-14232	PISTON CLUTCH	1				0	0
040	37410-75370	D RING	1				0.002	0.0044
050	6A700-13750	DISK CLUTCH	5				0.037	0.0814
060	6A700-13762	PLATE CLUTCH	4				0	0
070	TA040-69090	RUBBER	6				0.001	0.0022
080	6A700-13770	PLATE CLUTCH	1				0.001	0.0022
090	04611-00920	CIR CLIP INTERNAL	1				0.04	0.088
100	6C200-14250	BOSS SPLINE	1				0	0
110	08101-06807	BEARING BALL	1				0.03	0.066
120	36280-41360	CIR-CLIP	1				0.003	0.0066
130	6C200-14350	COLLAR BEARING	1				0	0
140	K2561-11373	SPRING CLUTCH	1				0.045	0.099
150	6C200-14240	COLLAR SPRING	1				0	0
160	04612-00300	CIR CLIP EXTERNAL	1				0.003	0.0066
170	6C200-14280	PLATE BRAKE	1				0	0
180	6C200-14380	PLATE BRAKE	1				0	0
190	04612-00600	CIR CLIP EXTERNAL	1				0.012	0.0264

silverhorn.co.uk

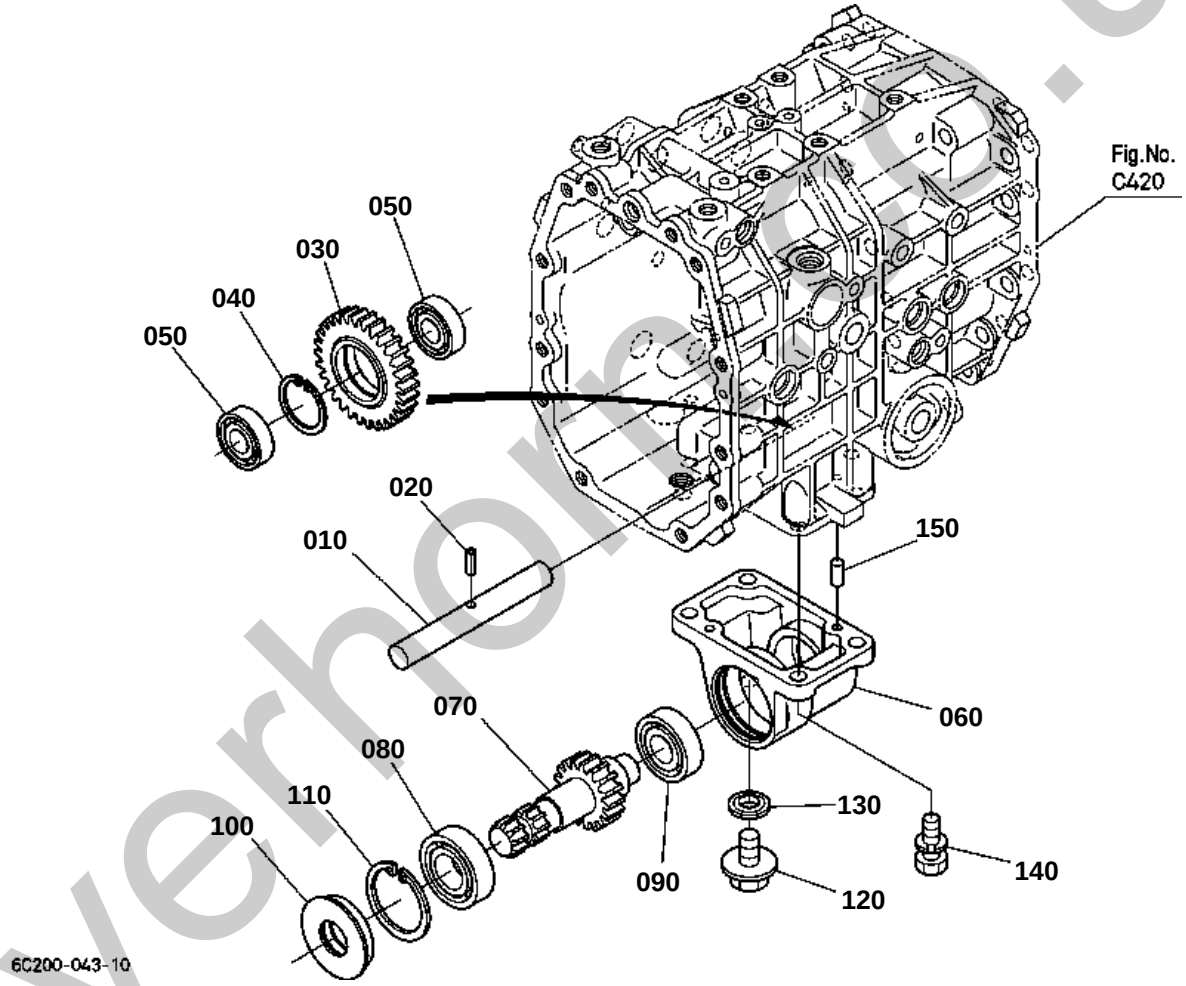

silverhorse.co.uk

↔ Interchangeable; ≠ not interchangeable; ← new for old; → old for new

REF.No	Part No.	Description	Q'ty	S.No.	I/C	REMARKS	Weight (kgf)	Weight (lb)
010	6C200-21110	SHAFT IDLE	1				0	0
020	05411-00616	PIN SPRING	1				0.002	0.0044
030	6C200-21120	GEAR MID	1			30T	0	0
040	04611-00400	CIR CLIP INTERNAL	1				0.005	0.011
050	6A700-16540	BEARING BALL	2				0.065	0.143
060	6C200-21210	CASE MID PTO	1				0	0
070	6C220-21220	SHAFT MID GEAR	1			17T	0	0
080	08101-06205	BEARING BALL	1				0.14	0.308
090	08101-06204	BEARING BALL	1				0.102	0.2244
100	32430-25540	SEAL OIL MID PTO	1				0.04	0.088
110	04611-00520	CIR CLIP INTERNAL	1				0.009	0.0198
120	01774-51212	BOLT FLANGE	1				0.028	0.0616
130	04717-01200	WASHER WITH RUBBER	1				0.002	0.0044
140	01123-51035	BOLT	4				0.025	0.055
150	05012-00614	PIN STRAIGHT	2				0.004	0.0088

silverhorn.co.uk

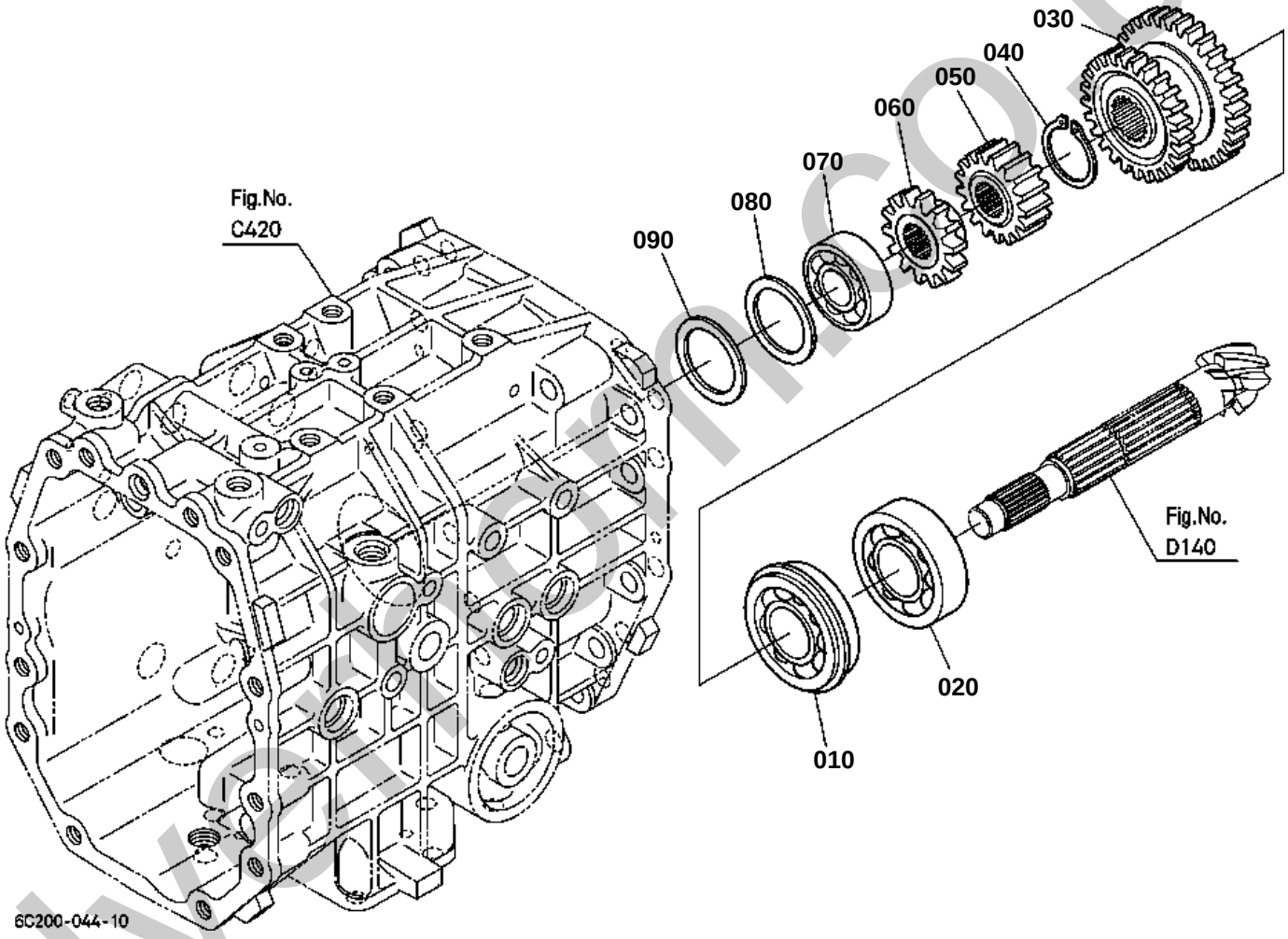

silverhomes.co.uk

↔ Interchangeable; ≠ not interchangeable; ← new for old; → old for new

REF.No	Part No.	Description	Q'ty	S.No.	I/C	REMARKS	Weight (kgf)	Weight (lb)
010	38430-21590	BEARING BALL	1				0.25	0.55
020	6A700-16640	BEARING BALL	1				0.23	0.506
030	6C200-14830	GEAR	1			25-31T	0	0
040	6C200-14860	CIR CLIP EXTERNAL	1				0	0
050	6C200-14840	GEAR	1			17T	0	0
060	6C220-14850	GEAR 4WD	1			14T	0	0
070	08221-07303	BEARING BALL	1				0.116	0.2552
080	66591-14720	SPACER	1				0.002	0.0044
090	66611-14670	SHIM	1			1.4mm	0.008	0.0176
090	66611-14680	SHIM	1			1.8mm	0.01	0.022
090	66611-14690	SHIM	1			0.2mm	0.001	0.0022

silverhorn.co.uk

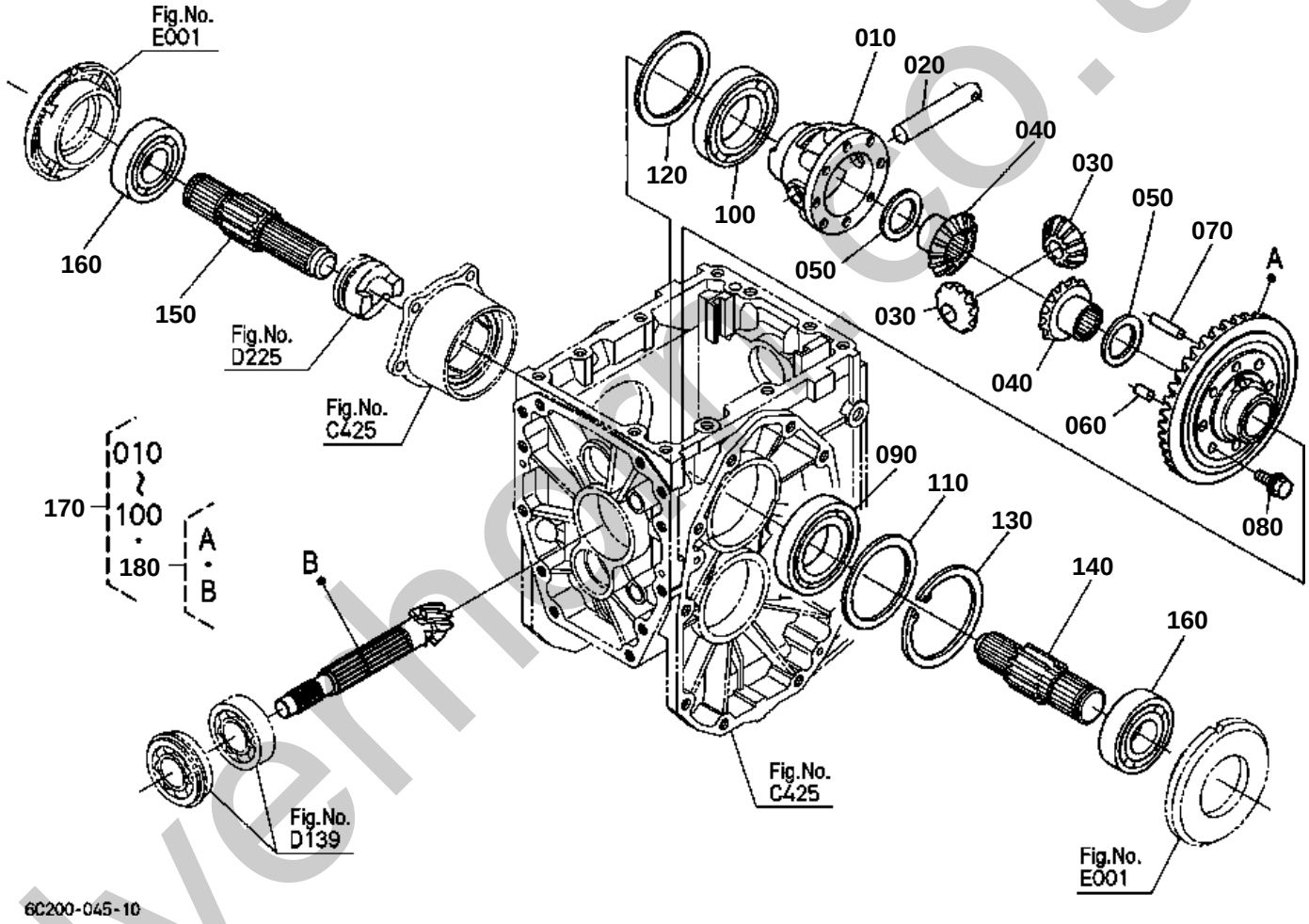

silverhart.co.uk

↔ Interchangeable; ≠ not interchangeable; ← new for old; → old for new

REF.No	Part No.	Description	Q'ty	S.No.	I/C	REMARKS	Weight (kgf)	Weight (lb)
010	6C040-14970	CASE DIFFERENTIAL	1				0.7	1.54
020	67711-14912	SHAFT DIFF.PINION	1				0.14	0.308
030	6C170-14923	GEAR BEVEL	2			12T	0.11	0.242
040	6C040-14930	GEAR DIFF.SIDE	2			14T	0.165	0.363
050	67211-15160	SHIM	2			1.0mm	0.01	0.022
050	67211-15170	SHIM	2			0.8mm	0.008	0.0176
050	67211-15180	SHIM	2			1.2mm	0.01	0.022
060	66591-14792	PIN KNOCK	1				0.003	0.0066
070	66591-14783	PIN STRAIGHT	1				0.01	0.022
080	67810-56680	BOLT UBS	6				0.013	0.0286
090	08101-06009	BEARING BALL	1				0.22	0.484
100	08101-06010	BEARING BALL	1				0.262	0.5764
110	66591-14980	SHIM DIFF.SIDE	1			0.5mm	0.005	0.011
110	66591-14990	SHIM DIFF.SIDE	1			0.2mm	0.002	0.0044
120	66611-15140	SHIM DIFF.SIDE	1			0.5mm	0.006	0.0132
120	66611-15150	SHIM DIFF.SIDE	1			0.2mm	0.002	0.0044
130	04611-00750	CIR CLIP INTERNAL	1				0.019	0.0418
140	6C170-14942	SHAFT DIFF.GEAR LH	1				0.61	1.342
150	6C170-14952	SHAFT DIFF.GEAR RH	1				0.71	1.562
160	08101-06306	BEARING BALL	2				0.335	0.737
170	6C200-97910	ASSY DIFFERENTIAL	1				0	0
180	6C200-97920	ASSY GEAR BEVEL	1				0	0

silverhorn.co.uk

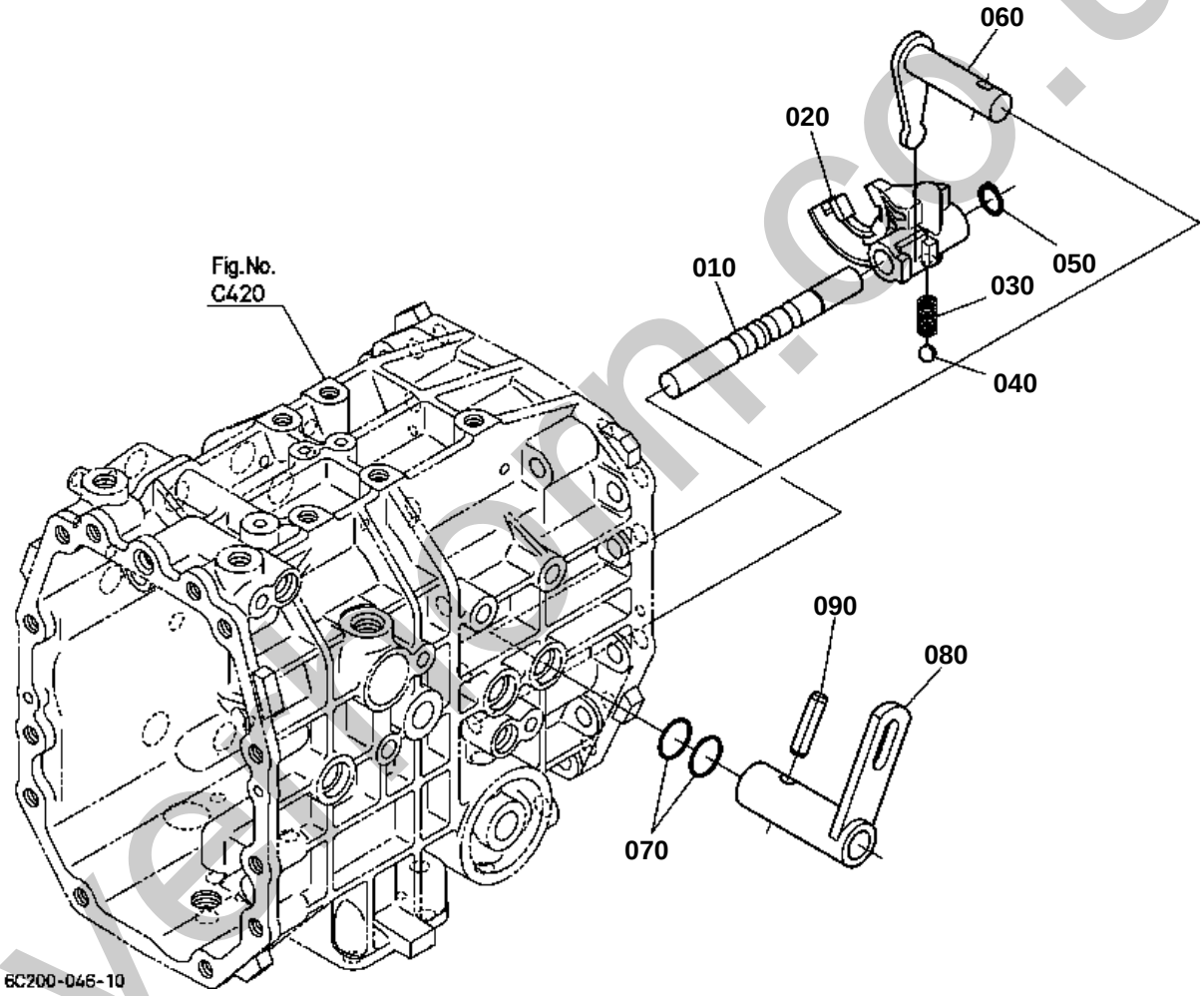

silverstone.co.uk

RANGE GEAR SHIFT FORK

↔ Interchangeable; ≠ not interchangeable; ← new for old; → old for new

REF.No	Part No.	Description	Q'ty	S.No.	I/C	REMARKS	Weight (kgf)	Weight (lb)
010	6A700-18410	ROD FORK	1				0.15	0.33
020	6C200-18422	FORK RANGE SHIFT	1				0	0
030	62061-18260	SPRING STOPPER	1				0.002	0.0044
040	07715-01605	BALL	1				0.003	0.0066
050	04612-00140	CIR CLIP EXTERNAL	1				0.001	0.0022
060	6A700-18510	ARM RANGE SHIFT	1				0.14	0.308
070	04816-00160	O RING	2				0.003	0.0066
080	6C200-18520	LEVER SHIFT ARM	1				0	0
090	05411-00832	PIN SPRING	1				0.035	0.077

silverhorn.co.uk

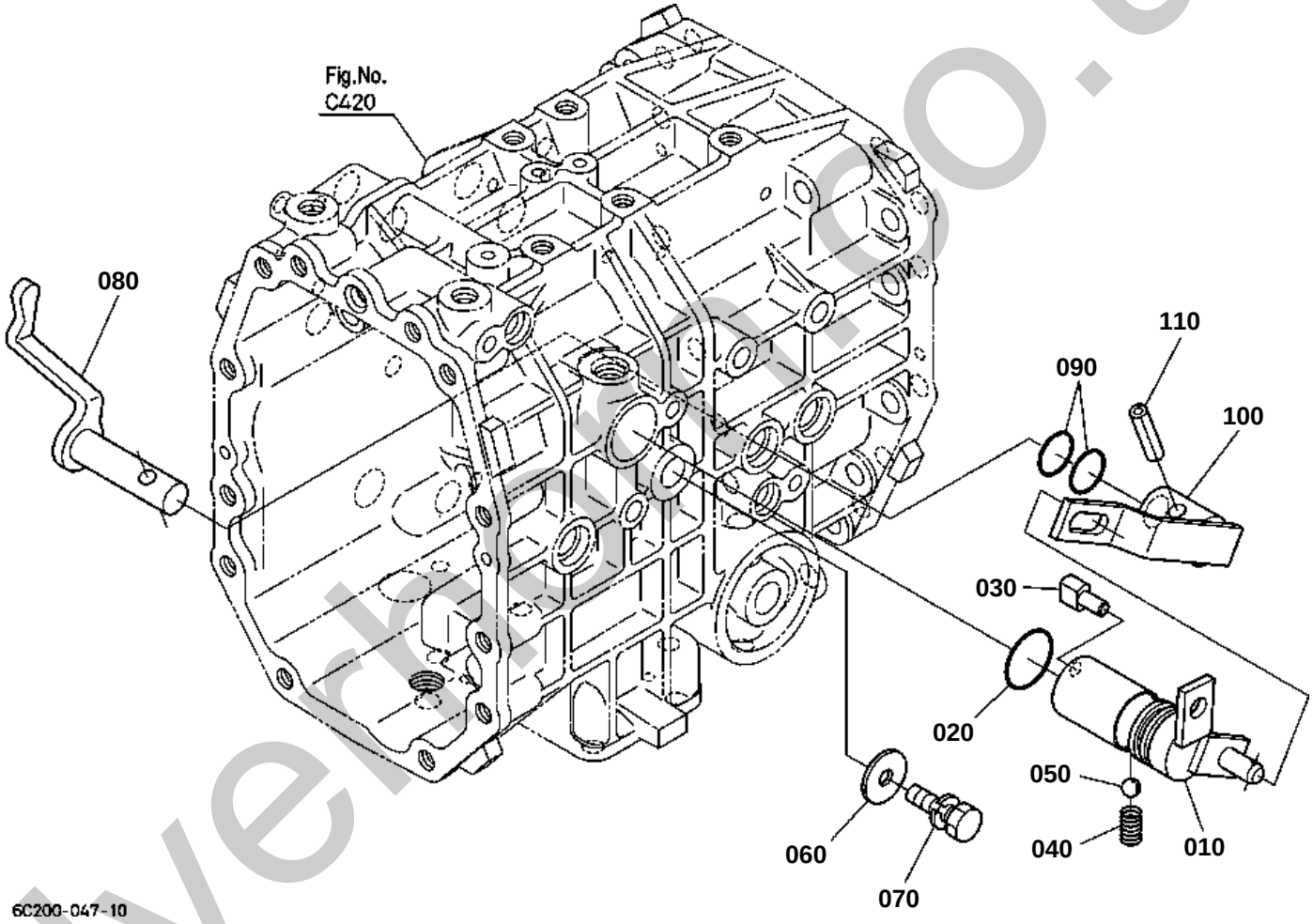

silverhill.co.uk

PTO GEAR SHIFT ARM

↔ Interchangeable; ≠ not interchangeable; ← new for old; → old for new

REF.No	Part No.	Description	Q'ty	S.No.	I/C	REMARKS	Weight (kgf)	Weight (lb)
010	6C200-18710	ARM PTO SHIFT	1				0	0
020	04816-50250	O RING	1				0.004	0.0088
030	6C200-18720	COTTER PTO	1				0	0
040	62061-18260	SPRING STOPPER	1				0.002	0.0044
050	07715-01605	BALL	1				0.003	0.0066
060	04015-60080	WASHER PLAIN	1				0.01	0.022
070	01123-50820	BOLT	1				0.011	0.0242
080	6C200-18730	ARM REAR PTO	1				0	0
090	04816-00160	O RING	2				0.003	0.0066
100	6C200-18740	LEVER PTO	1				0	0
110	05411-00832	PIN SPRING	1				0.035	0.077

silverhorn.co.uk

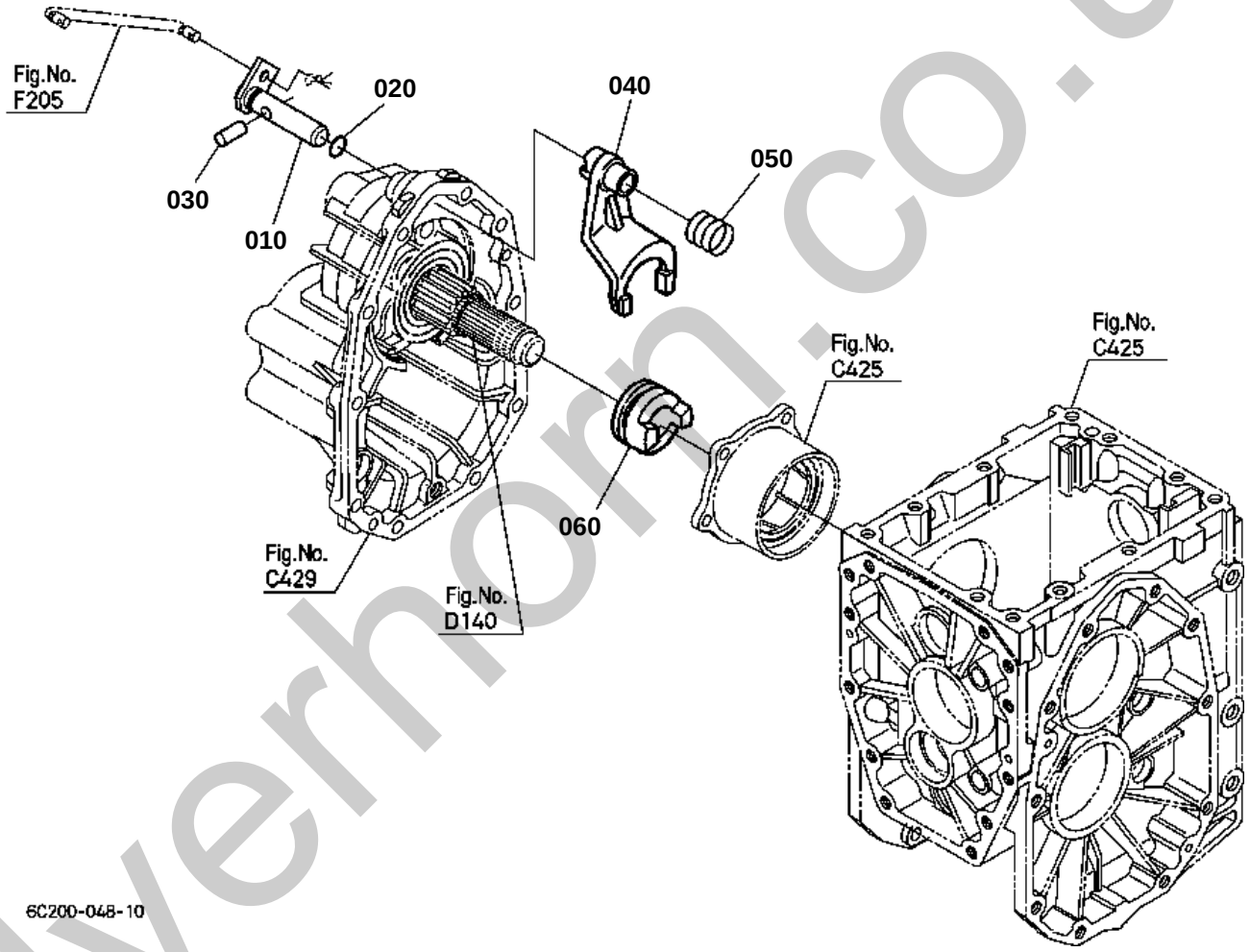

silverhorn.co.uk

DIFFERENTIAL LOCK SHIFT FORK

↔ Interchangeable; ≠ not interchangeable; ← new for old; → old for new

REF.No	Part No.	Description	Q'ty	S.No.	I/C	REMARKS	Weight (kgf)	Weight (lb)
010	6C040-19120	ROD FORK	1				0.17	0.374
020	04816-06120	O RING	1				0.002	0.0044
030	6A100-19130	PIN	1				0.017	0.0374
040	6C040-19110	FORK DIFF.LOCK SHIFT	1				0.22	0.484
050	6A700-19130	SPRING	1				0.012	0.0264
060	66611-15130	CLUTCH DIFF.LOCK	1				0.2	0.44

silverhorn.co.uk

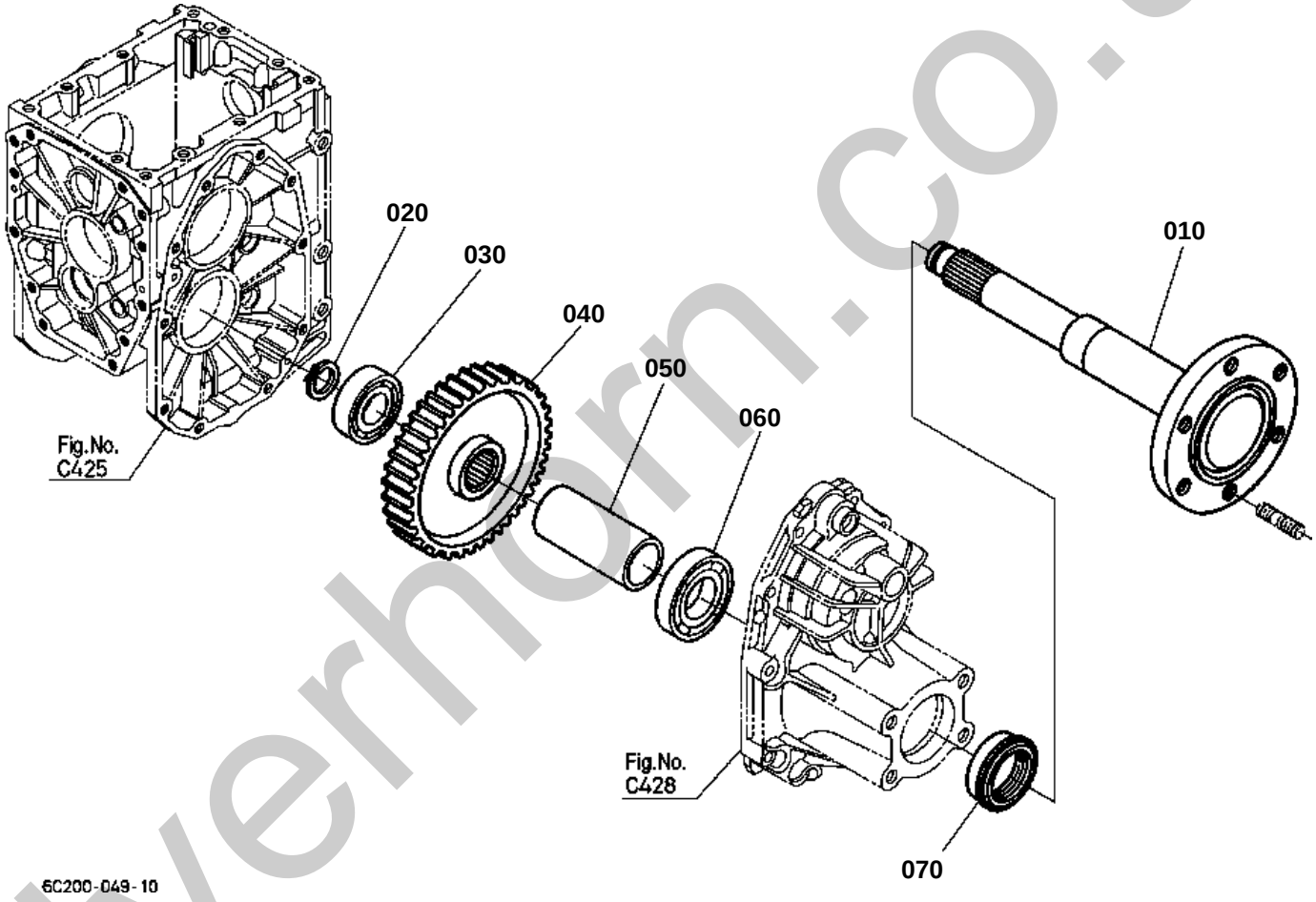

silverhorn.co.uk

↔ Interchangeable; ≠ not interchangeable; ← new for old; → old for new

REF.No	Part No.	Description	Q'ty	S.No.	I/C	REMARKS	Weight (kgf)	Weight (lb)
010	32721-17113	SHAFT REAR AXLE	2				7.3	16.06
020	04612-00300	CIR CLIP EXTERNAL	2				0.003	0.0066
030	08101-06306	BEARING BALL	2				0.335	0.737
040	32721-17130	GEAR	2			57T	2.72	5.984
050	6C040-17140	COLLAR	2				0.26	0.572
060	6A700-16590	BEARING BALL	2				0.36	0.792
070	32721-17150	SEAL OIL	2				0.07	0.154

silverhorn.co.uk

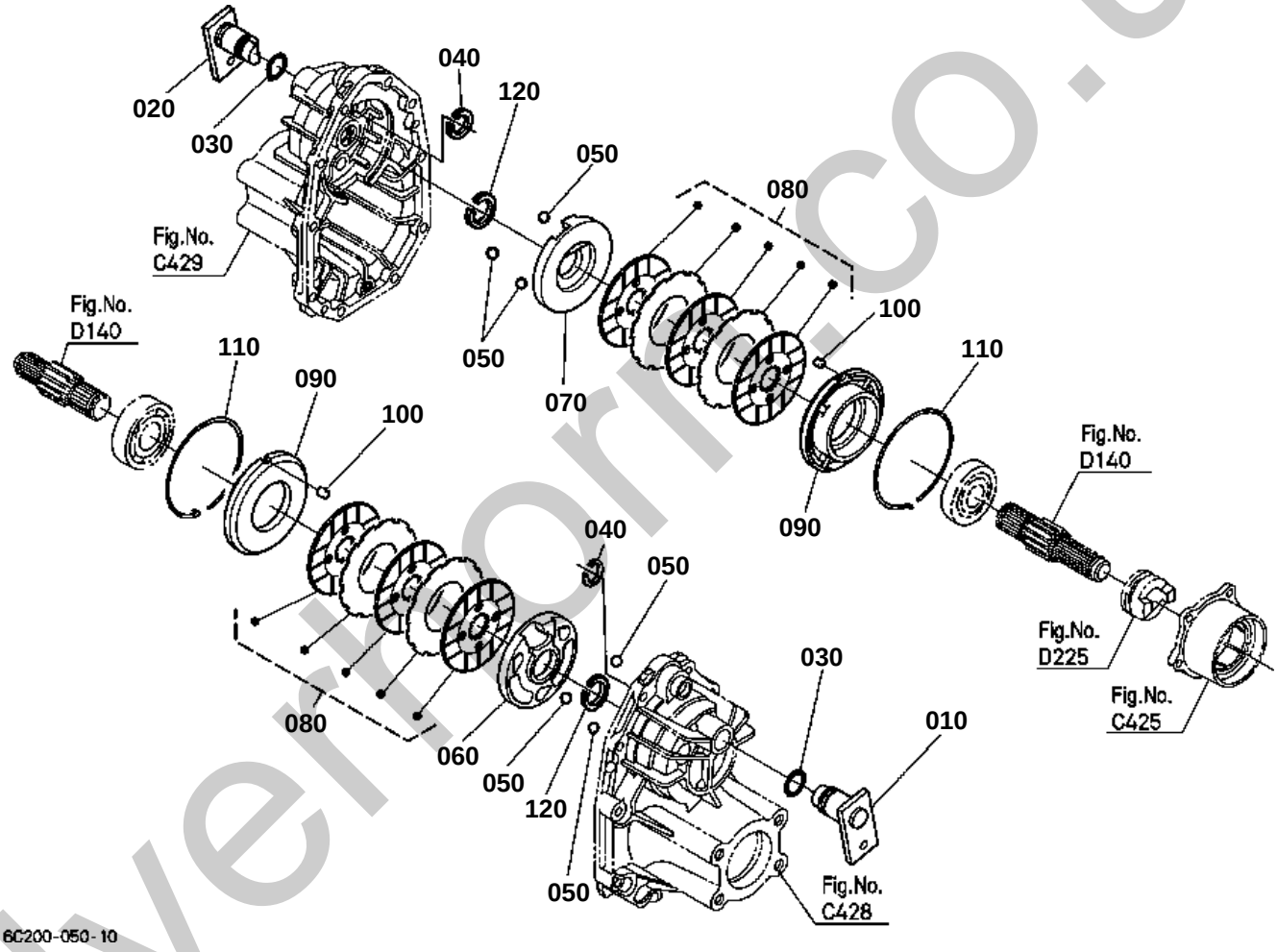

silverfordco.uk

↔ Interchangeable; ≠ not interchangeable; ← new for old; → old for new

REF.No	Part No.	Description	Q'ty	S.No.	I/C	REMARKS	Weight (kgf)	Weight (lb)
010	6A600-22360	LEVER CAM LH	1				0	0
020	6A600-22460	LEVER CAM RH	1				0	0
030	04816-00210	O RING	2				0.004	0.0088
040	67061-14370	CIR-CLIP	2				0.002	0.0044
050	07715-00805	BALL	6				0.016	0.0352
060	6A700-22320	ACTUATOR LH	1				0.55	1.21
070	6A700-22420	ACTUATOR RH	1				0.55	1.21
080	6A700-22300	ASSY BRAKE	2				0.75	1.65
090	6A700-22380	HOLDER BEARING	2				0.75	1.65
100	6C040-22440	PIN	2				0.004	0.0088
110	6A320-22390	CIR-CLIP INTERNAL	2				0.038	0.0836
120	70435-51590	CIR-CLIP	2				0.002	0.0044

silverhorn.co.uk

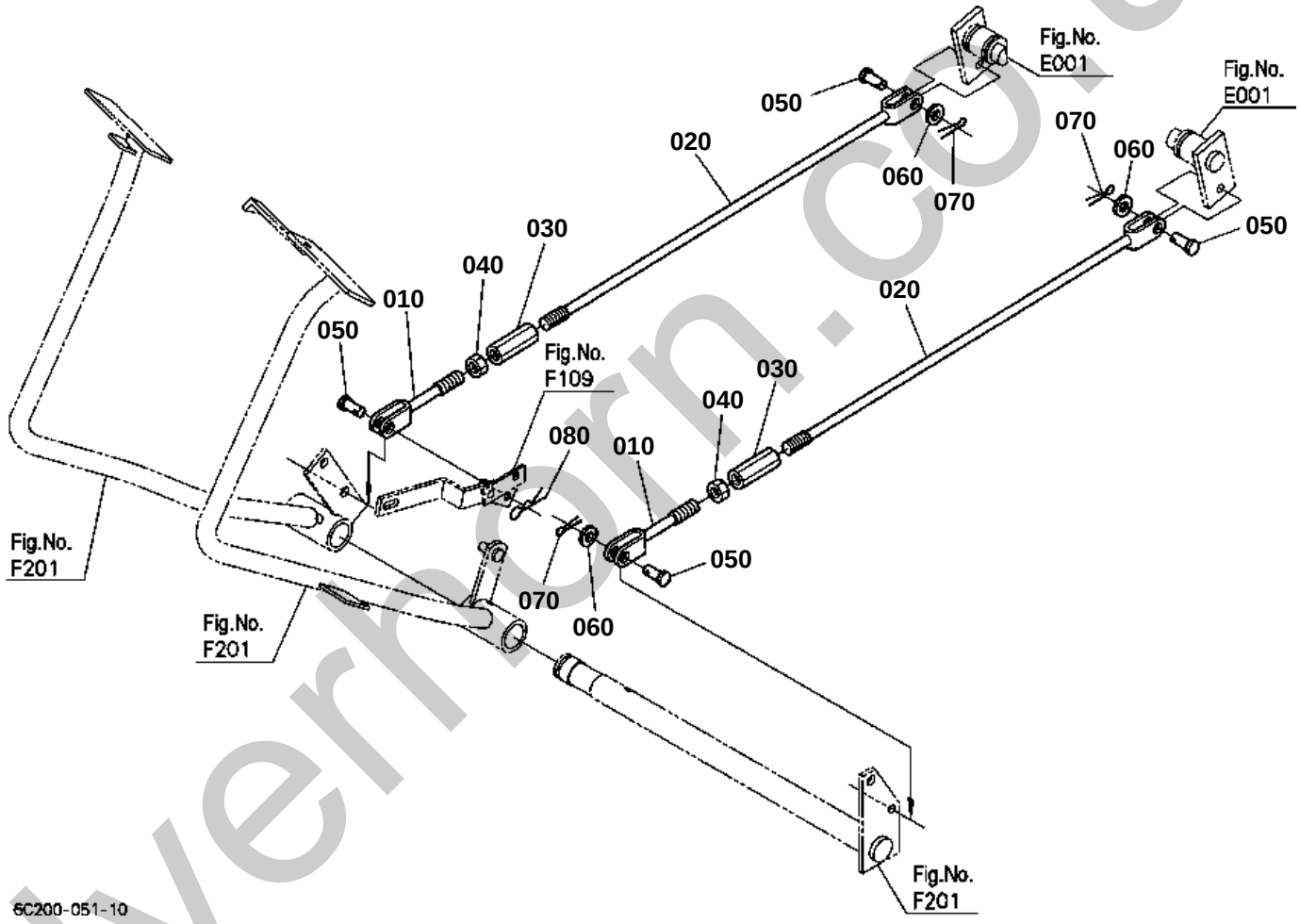

silverhorn.co.uk

BRAKE ROD

↔ Interchangeable; ≠ not interchangeable; ← new for old; → old for new

REF.No	Part No.	Description	Q'ty	S.No.	I/C	REMARKS	Weight (kgf)	Weight (lb)
010	6C200-42370	ROD BRAKE FRONT	2				0	0
020	6A600-42360	ROD BRAKE REAR	2				0.18	0.396
030	66591-42410	TURNBUCKLE	2				0.046	0.1012
040	02114-50080	NUT	2				0.005	0.011
050	05122-50822	PIN JOINT	4				0.01	0.022
060	04013-60080	WASHER PLAIN	3				0.002	0.0044
070	05511-50218	PIN SPLIT	3				0.001	0.0022
080	05525-50800	PIN SNAP	1				0.001	0.0022

silverhorn.co.uk

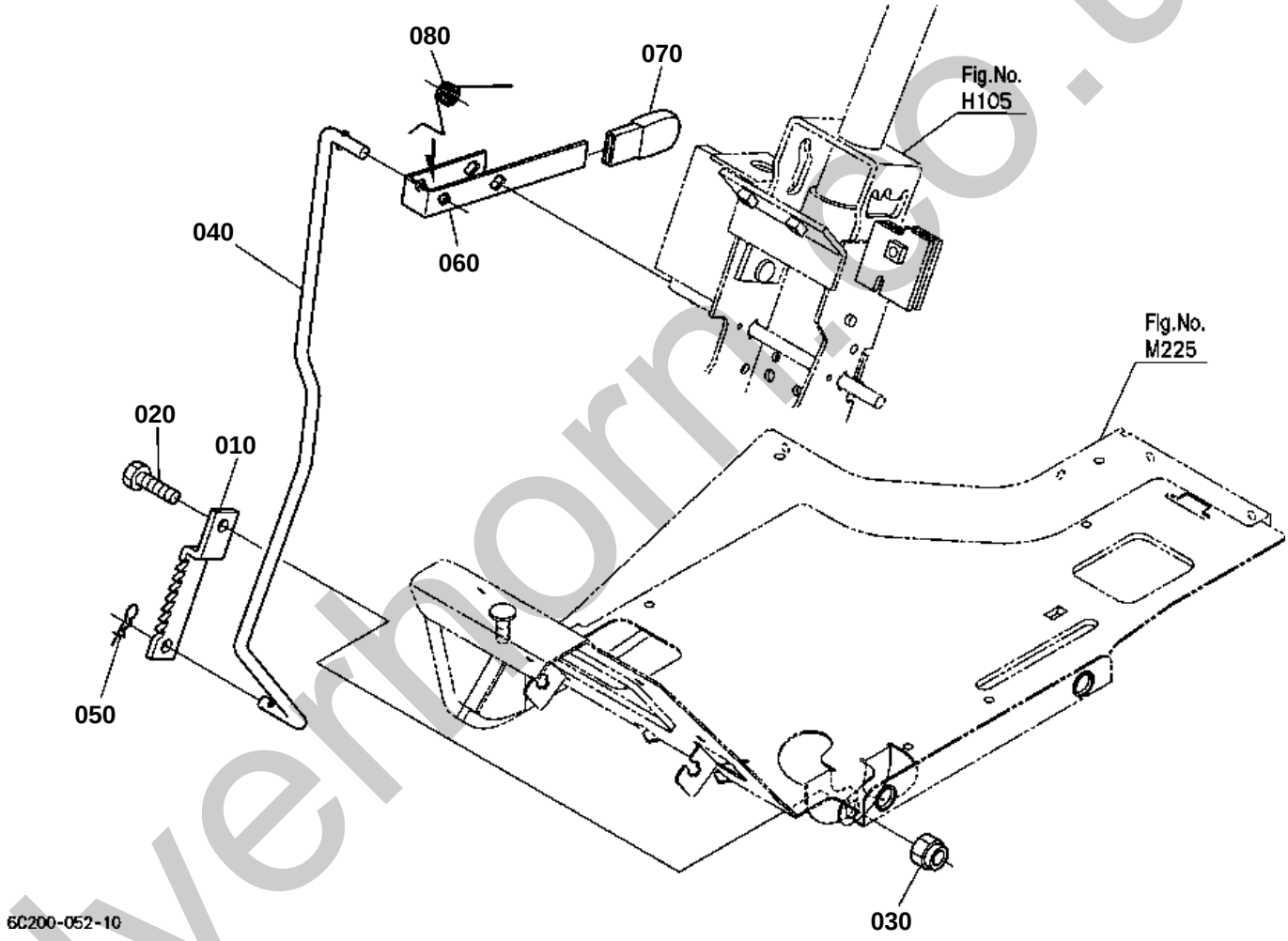

silverhorn.co.uk

PARKING BRAKE LEVER

↔ Interchangeable; ≠ not interchangeable; ← new for old; → old for new

REF.No	Part No.	Description	Q'ty	S.No.	I/C	REMARKS	Weight (kgf)	Weight (lb)
010	6C200-42250	PLATE BRAKE LOCK	1				0	0
020	01153-50816	BOLT	1				0.01	0.022
030	50591-62370	NUT	1				0.005	0.011
040	6C200-42260	ROD PARKING	1				0	0
050	52300-34120	PIN SNAP	1				0.001	0.0022
060	6A700-42270	LEVER BRAKE	1				0.1	0.22
070	6C040-41360	GRIP LEVER	1				0.012	0.0264
080	6C040-41380	SPRING RETURN	1				0.008	0.0176

silverhorn.co.uk

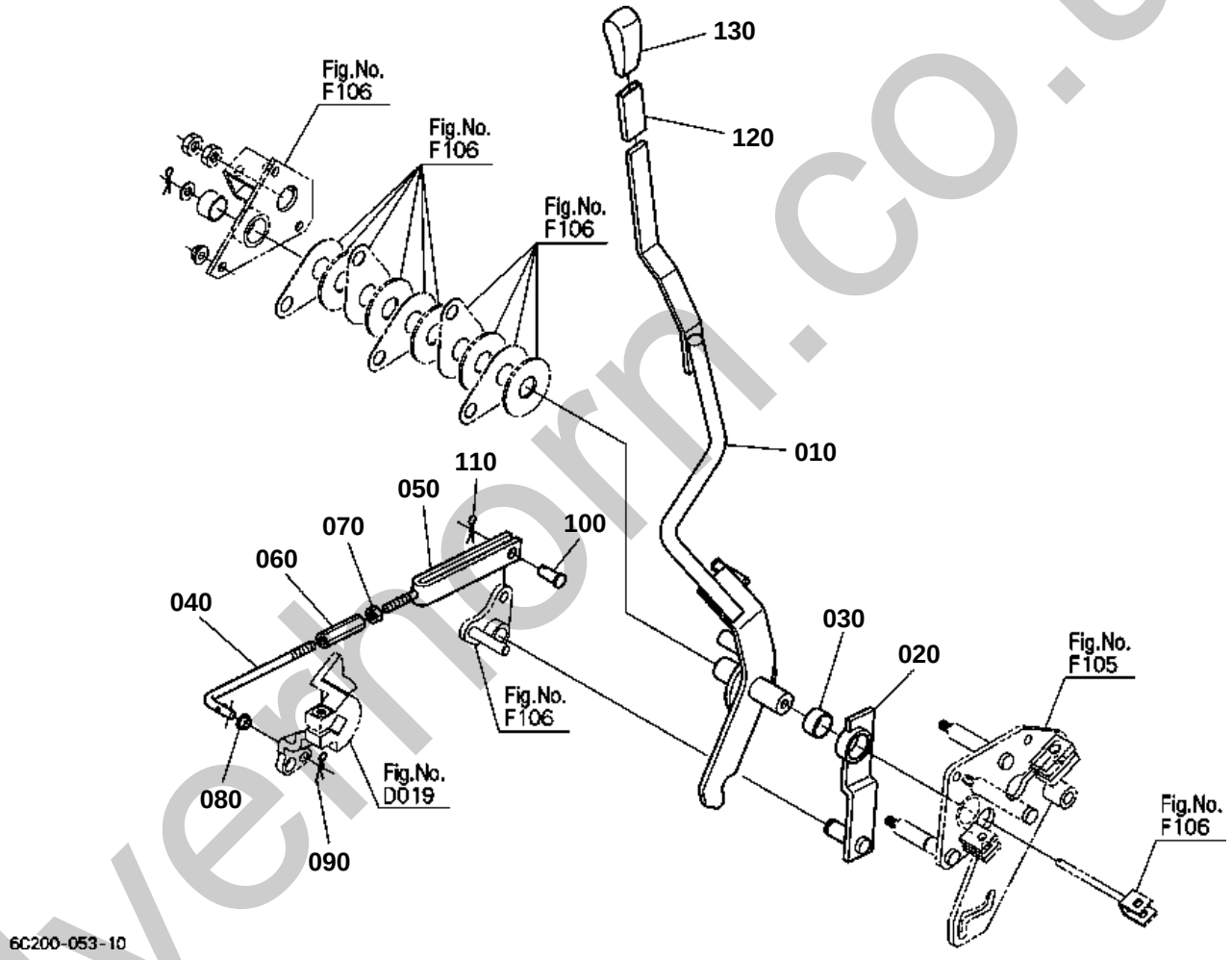

silvermorn.co.uk

CRUISE CONTROL LEVER

↔ Interchangeable; ≠ not interchangeable; ← new for old; → old for new

REF.No	Part No.	Description	Q'ty	S.No.	I/C	REMARKS	Weight (kgf)	Weight (lb)
010	6C200-19522	LEVER CONTROL	1				0	0
020	6C200-19530	ASSY ARM	1				0	0
030	08511-02212	BUSH	1				0.1	0.22
040	6C200-19370	ROD FRONT	1				0	0
050	6C200-19382	ROD REAR	1				0	0
060	66591-42410	TURNBUCKLE	1				0.046	0.1012
070	02114-50080	NUT	1				0.005	0.011
080	6A100-54190	BUSH	1				0.001	0.0022
090	05525-50800	PIN SNAP	1				0.001	0.0022
100	05122-51025	PIN JOINT	1				0.017	0.0374
110	05525-61000	PIN SNAP	1				0.002	0.0044
120	6A600-38250	CUSHION	1				0.005	0.011
130	6A700-18592	GRIP	1				0.042	0.0924

silverhorn.co.uk

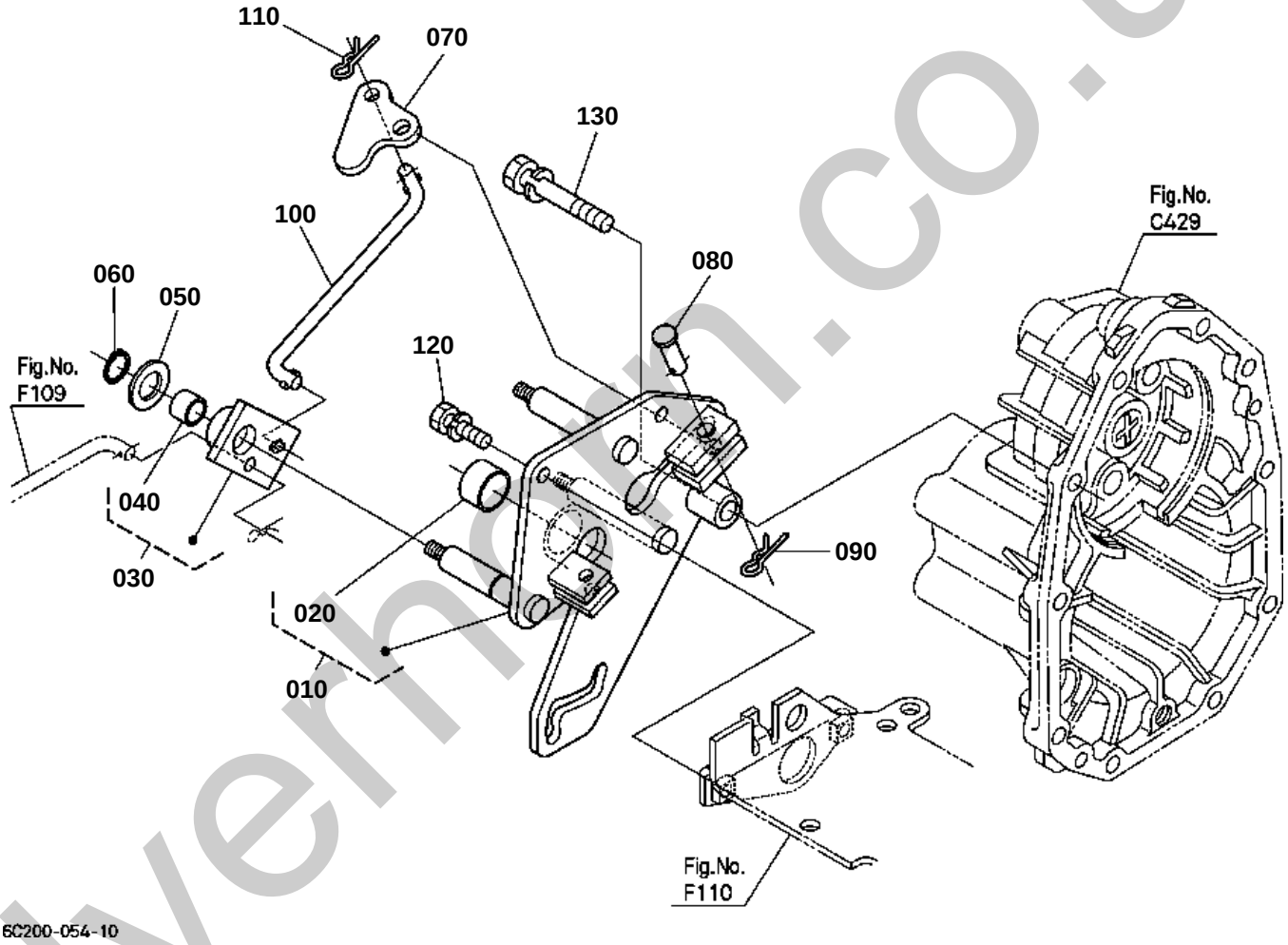

silverhorn.co.uk

CRUISE CONTROL BASE

↔ Interchangeable; ≠ not interchangeable; ← new for old; → old for new

REF.No	Part No.	Description	Q'ty	S.No.	I/C	REMARKS	Weight (kgf)	Weight (lb)
010	6C200-19490	ASSY BASE	1				0	0
020	08511-02215	BUSH	1				0.012	0.0264
030	6C200-19440	ASSY ARM RELEASE	1				0	0
040	08511-01510	BUSH	1				0.005	0.011
050	04013-60140	WASHER PLAIN	1				0.01	0.022
060	04612-00150	CIR CLIP EXTERNAL	1				0.001	0.0022
070	6C200-19460	LEVER RELEASE	1				0	0
080	05122-51030	PIN JOINT	1				0.02	0.044
090	05525-61000	PIN SNAP	1				0.002	0.0044
100	6C200-19470	ROD RELEASE	1				0	0
110	05525-50800	PIN SNAP	1				0.001	0.0022
120	01123-50820	BOLT	2				0.011	0.0242
130	01123-51065	BOLT	1				0.04	0.088

silverhorn.co.uk

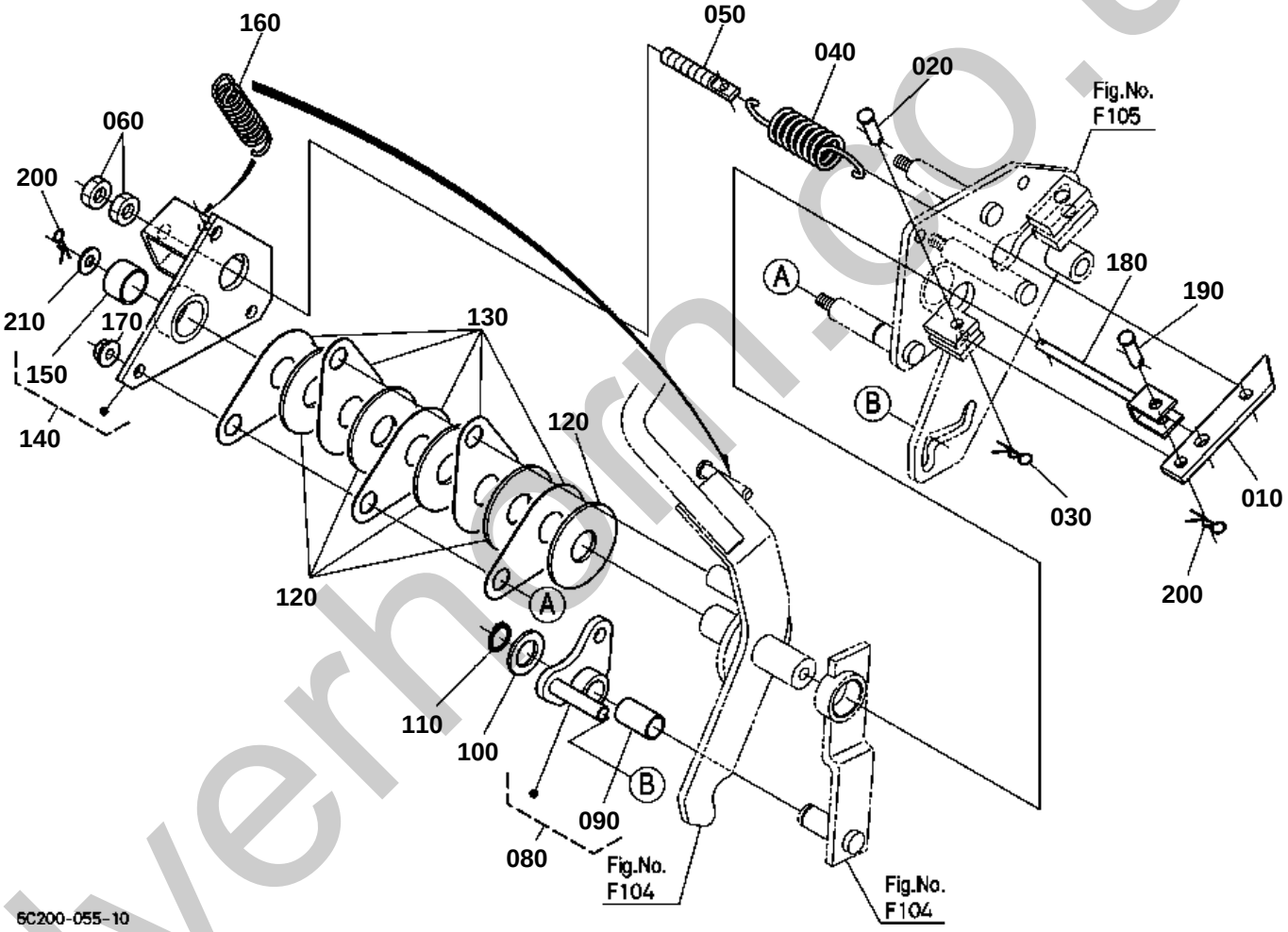

silverhorn.co.uk

↔ Interchangeable; ≠ not interchangeable; ← new for old; → old for new

REF.No	Part No.	Description	Q'ty	S.No.	I/C	REMARKS	Weight (kgf)	Weight (lb)
010	6C170-43642	LEVER RELEASE	1				0.08	0.176
020	05122-50825	PIN JOINT	1				0.011	0.0242
030	05525-50800	PIN SNAP	1				0.001	0.0022
040	6C170-43690	SPRING	1				0.06	0.132
050	3G710-29952	BOLT GST LEVER	1				0.03	0.066
060	02118-50100	NUT	2				0.005	0.011
070	99999-99999	BLANK	0				0	0
080	6C200-19560	ASSY ARM	1				0	0
090	08511-01525	BUSH	1				0.01	0.022
100	04013-60140	WASHER PLAIN	1				0.01	0.022
110	04612-00150	CIR CLIP EXTERNAL	1				0.001	0.0022
120	6C170-43712	DISK FRICTION	5				0.014	0.0308
130	6C170-43532	PLATE FRICTION	5				0.02	0.044
140	6C200-19590	ASSY COVER	1				0	0
150	08511-02215	BUSH	1				0.012	0.0264
160	31391-47140	SPRING	1				0.025	0.055
170	02121-50080	NUT	3				0.01	0.022
180	6C200-19430	ROD RELEASE	1				0	0
190	05122-50825	PIN JOINT	1				0.011	0.0242
200	05525-50800	PIN SNAP	2				0.001	0.0022
210	04013-60080	WASHER PLAIN	1				0.002	0.0044

silverhorn.co.uk

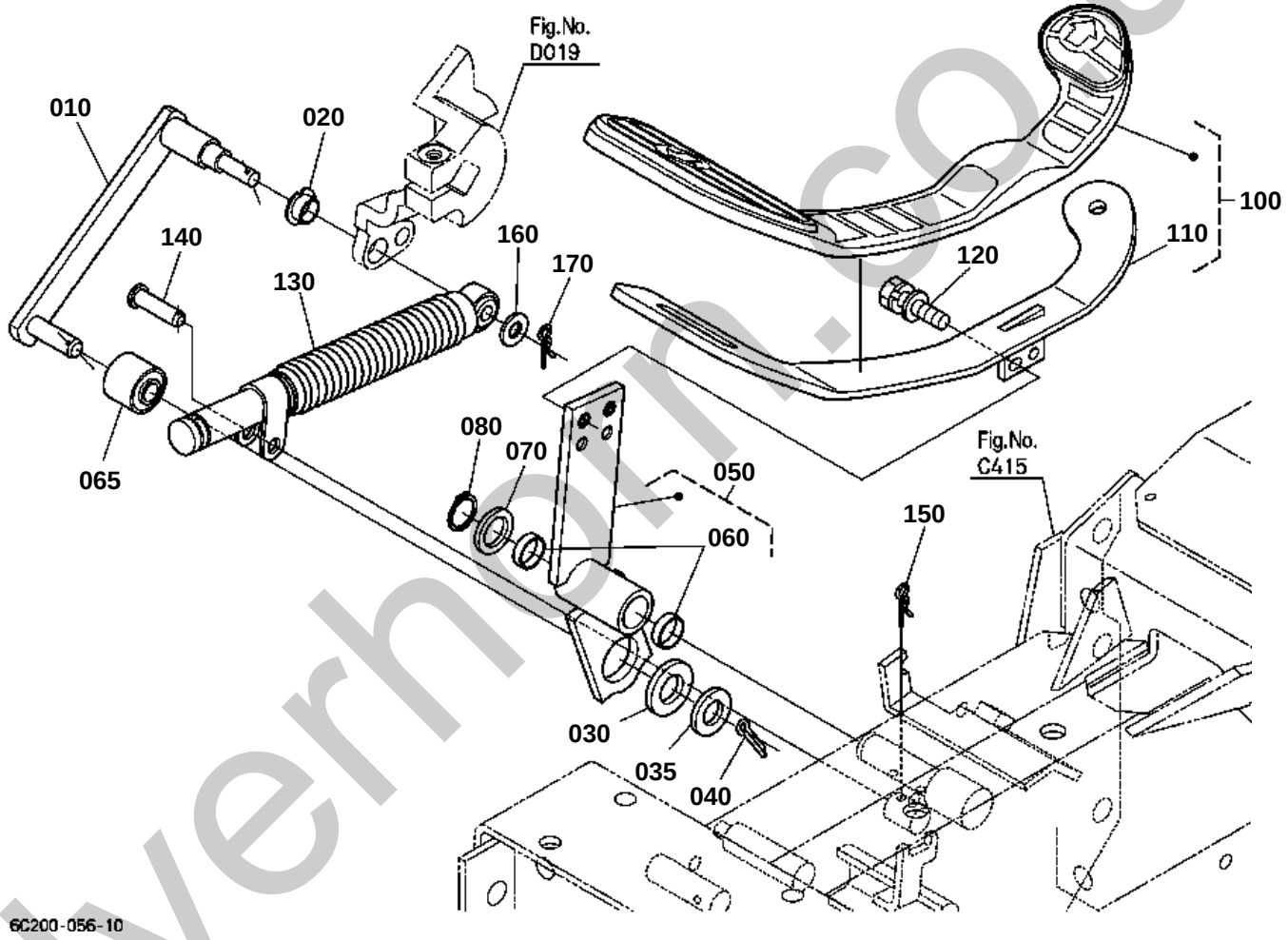

silverhorn.co.uk

↔ Interchangeable; ≠ not interchangeable; ← new for old; → old for new

REF.No	Part No.	Description	Q'ty	S.No.	I/C	REMARKS	Weight (kgf)	Weight (lb)
010	6C200-18220	PLATE HST	1				0	0
020	6A100-44680	BUSH	1				0.003	0.0066
030	04013-60140	WASHER PLAIN	1				0.01	0.022
035	04013-60100	WASHER PLAIN	1				0.003	0.0066
040	05511-50320	PIN SPLIT	1				0.002	0.0044
050	6C200-18203	ASSY LEVER HST	1				0	0
060	08511-01610	BUSH	2				0.005	0.011
065	6A000-12180	CUSHION RUBBER	1				0.036	0.0792
070	45403-41330	COLLAR DISTANCE	1				0.01	0.022
080	04612-00160	CIR CLIP EXTERNAL	1				0.001	0.0022
090	99999-99999	BLANK	0				0	0
100	TD060-55543	PEDAL HST CONTROL	1				0.33	0.726
110	TD060-55113	PEDAL HST	1				0.835	1.837
120	01125-60820	BOLT	2				0.015	0.033
130	32721-43350	DAMPER HST	1				0.26	0.572
140	6C200-18350	PIN JOINT	1				0	0
150	05525-51600	PIN SNAP	1				0.003	0.0066
160	04013-60080	WASHER PLAIN	1				0.002	0.0044
170	05525-50800	PIN SNAP	1				0.001	0.0022

silverhorn.co.uk

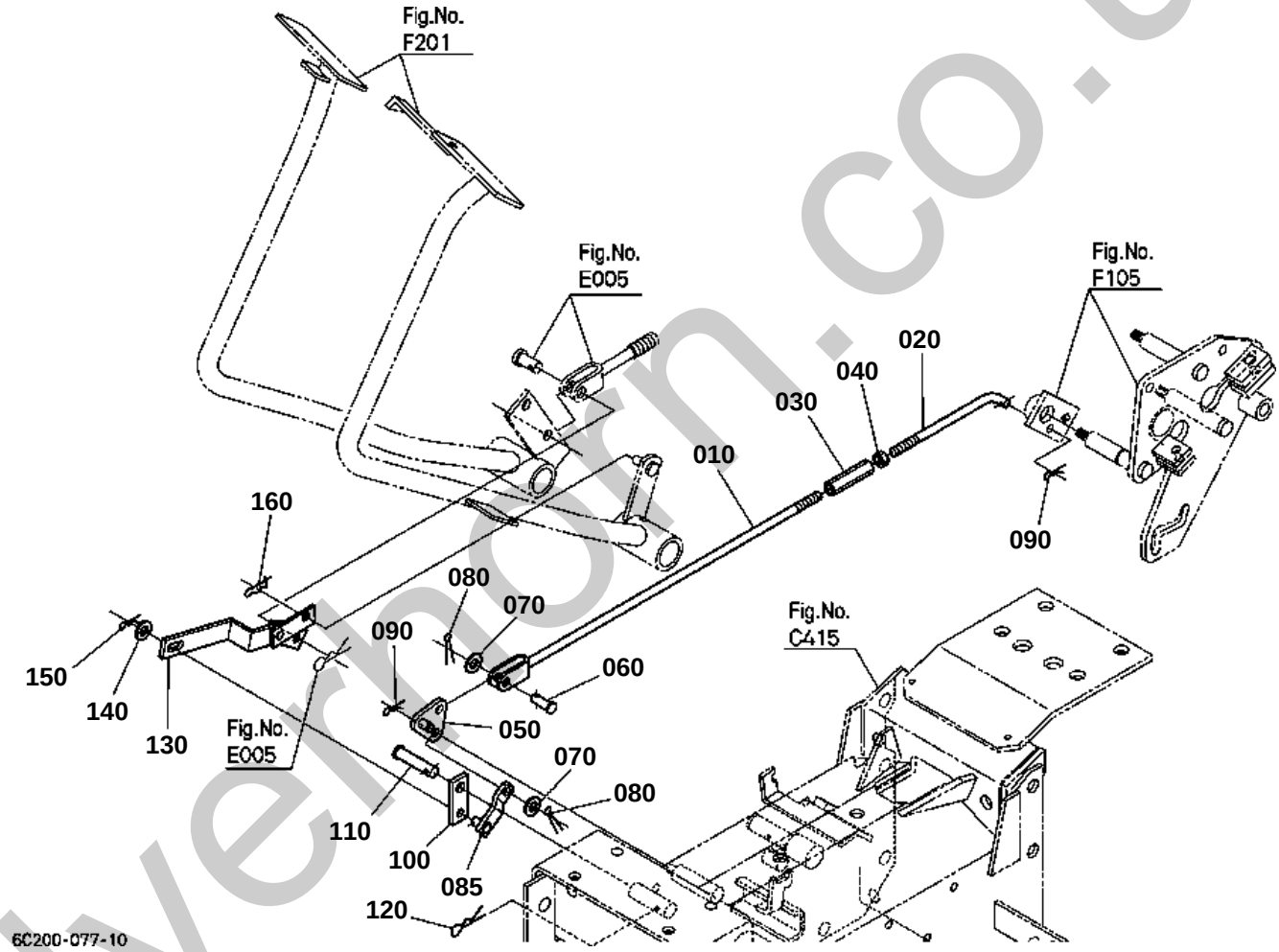

silvernorn.co.uk

HST RELEASE ROD

↔ Interchangeable; ≠ not interchangeable; ← new for old; → old for new

REF.No	Part No.	Description	Q'ty	S.No.	I/C	REMARKS	Weight (kgf)	Weight (lb)
010	6C200-19410	ROD FRONT RELEASE	1				0	0
020	6C200-19420	ROD REAR RELEASE	1				0	0
030	66591-42410	TURNBUCKLE	1				0.046	0.1012
040	02114-50080	NUT	1				0.005	0.011
050	6C200-19342	LINK REAR	1				0	0
060	05122-50822	PIN JOINT	1				0.01	0.022
070	04013-60080	WASHER PLAIN	2				0.002	0.0044
080	05511-50218	PIN SPLIT	2				0.001	0.0022
085	6C200-19330	LINK MIDDLE	1				0	0
090	05525-50800	PIN SNAP	2				0.001	0.0022
100	6C200-19352	LINK FRONT	1				0	0
110	6C200-19390	PIN JOINT	1				0	0
120	05525-51600	PIN SNAP	1				0.003	0.0066
130	6C200-43340	ASSY LINK	1				0	0
140	04013-60080	WASHER PLAIN	1				0.002	0.0044
150	05525-50800	PIN SNAP	1				0.001	0.0022
160	52300-34120	PIN SNAP	1				0.001	0.0022

silverhorn.co.uk

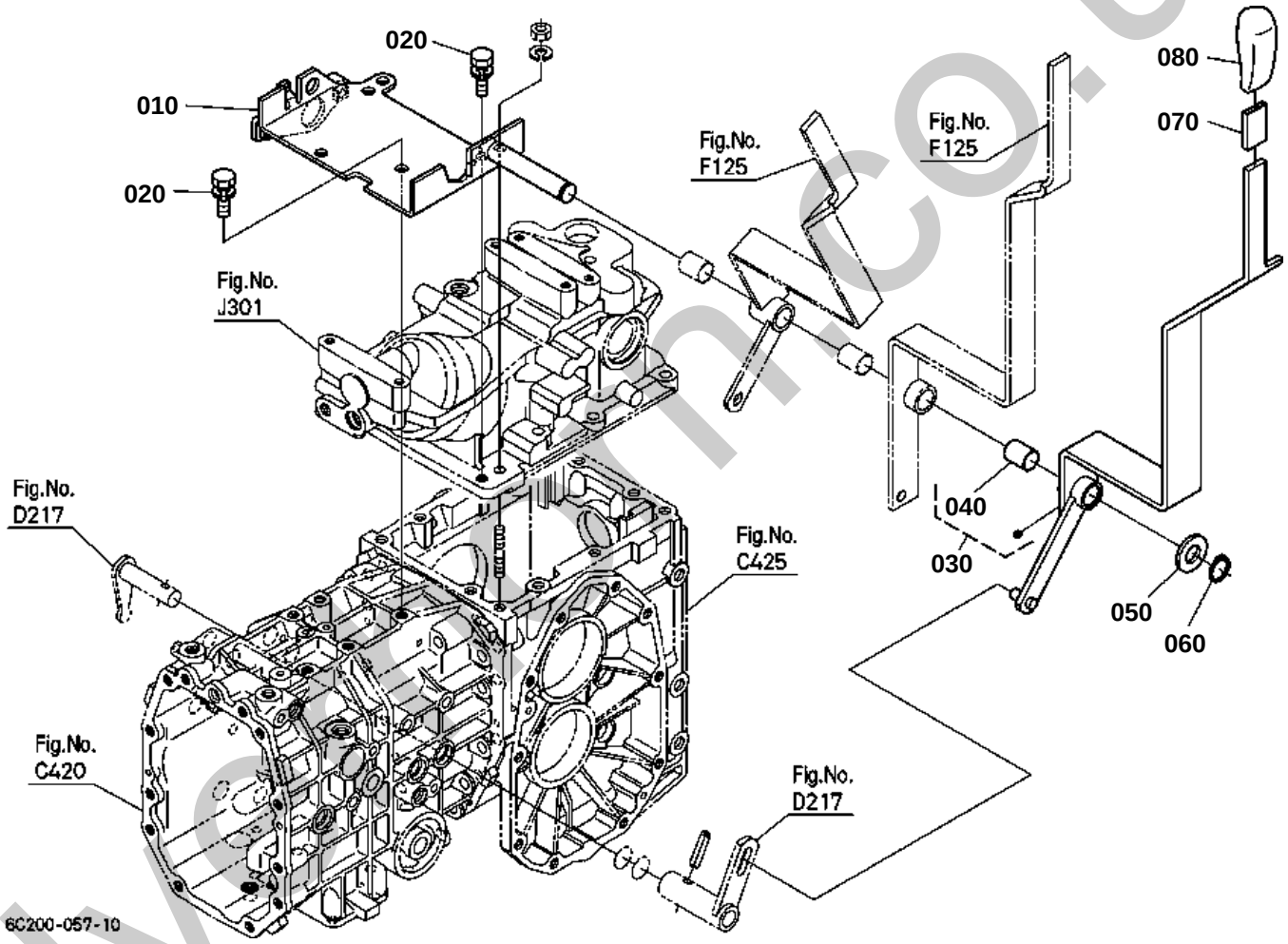

silvercommco.uk

RANGE GEAR SHIFT LEVER

↔ Interchangeable; ≠ not interchangeable; ← new for old; → old for new

REF.No	Part No.	Description	Q'ty	S.No.	I/C	REMARKS	Weight (kgf)	Weight (lb)
010	6C200-11180	BRACKET	1				0	0
020	01123-51025	BOLT	4				0.02	0.044
030	6C200-18500	LEVER RANGE SHIFT	1				0	0
040	08511-01825	BUSH	1				0.01	0.022
050	04013-50180	WASHER PLAIN	1				0.015	0.033
060	04612-00180	CIR CLIP EXTERNAL	1				0.001	0.0022
070	6C040-42760	CUSHION	1				0.003	0.0066
080	6A700-18352	GRIP	1				0.052	0.1144

silverhorn.co.uk

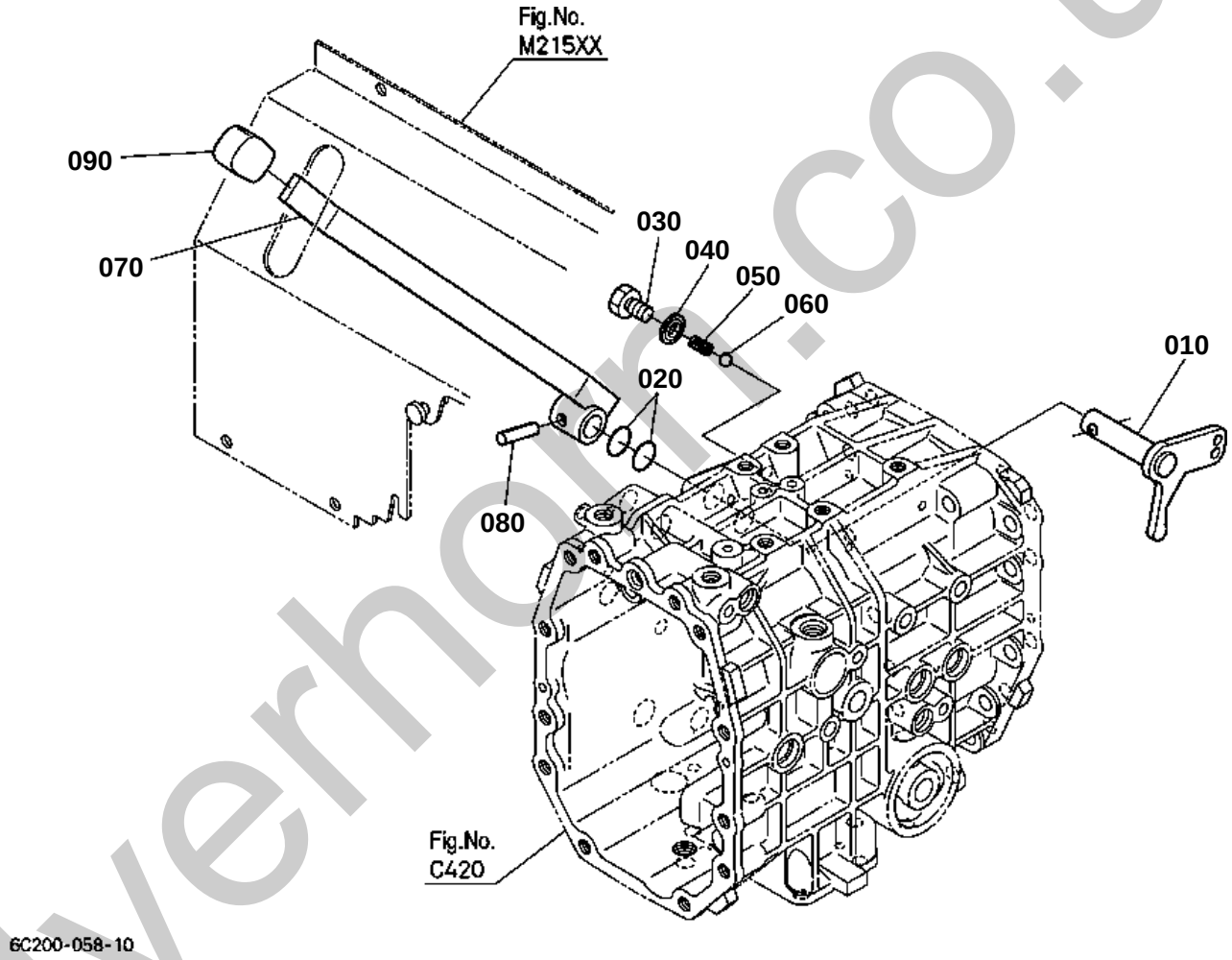

silverhorn.co.uk

FRONT WHEEL DRIVE LEVER

↔ Interchangeable; ≠ not interchangeable; ← new for old; → old for new

REF.No	Part No.	Description	Q'ty	S.No.	I/C	REMARKS	Weight (kgf)	Weight (lb)
010	6A700-19210	ARM 4WD SHIFT	1				0.2	0.44
020	04816-00160	O RING	2				0.003	0.0066
030	6C040-19222	BOLT	1				0.015	0.033
040	04717-01000	WASHER WITH RUBBER	1				0.001	0.0022
050	62061-18260	SPRING STOPPER	1				0.002	0.0044
060	07715-01605	BALL	1				0.003	0.0066
070	6C200-18910	LEVER FWD	1				0	0
080	05411-00832	PIN SPRING	1				0.035	0.077
090	6A320-42630	GRIP LEVER	1				0.019	0.0418

silverhorn.co.uk

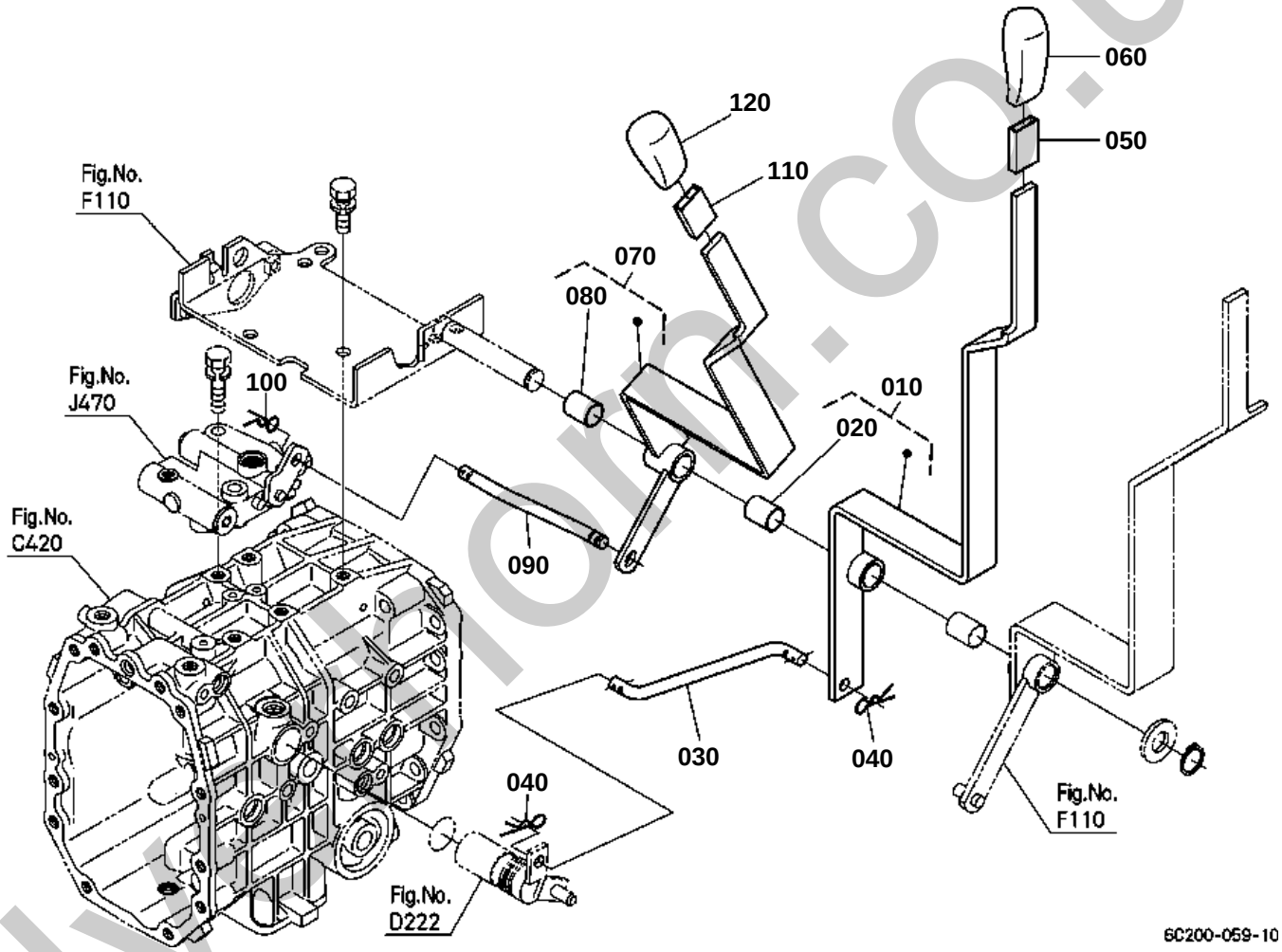

silverthorn.co.uk

PTO GEAR SHIFT LEVER

↔ Interchangeable; ≠ not interchangeable; ← new for old; → old for new

REF.No	Part No.	Description	Q'ty	S.No.	I/C	REMARKS	Weight (kgf)	Weight (lb)
010	6C200-18700	ASSY LEVER PTO	1				0	0
020	08511-01825	BUSH	1				0.01	0.022
030	6C200-18750	ROD PTO	1				0	0
040	05525-61000	PIN SNAP	2				0.002	0.0044
050	6A100-18560	CUSHION	1				0.005	0.011
060	6C200-18790	GRIP	1				0	0
070	6C200-18800	ASSY LEVER PTO	1				1	2.2
080	08511-01825	BUSH	1				0.01	0.022
090	6C200-18830	ROD PTO	1				0	0
100	05525-61000	PIN SNAP	1				0.002	0.0044
110	6C040-42760	CUSHION	1				0.003	0.0066
120	6C200-18790	GRIP	1				0	0

silverhorn.co.uk

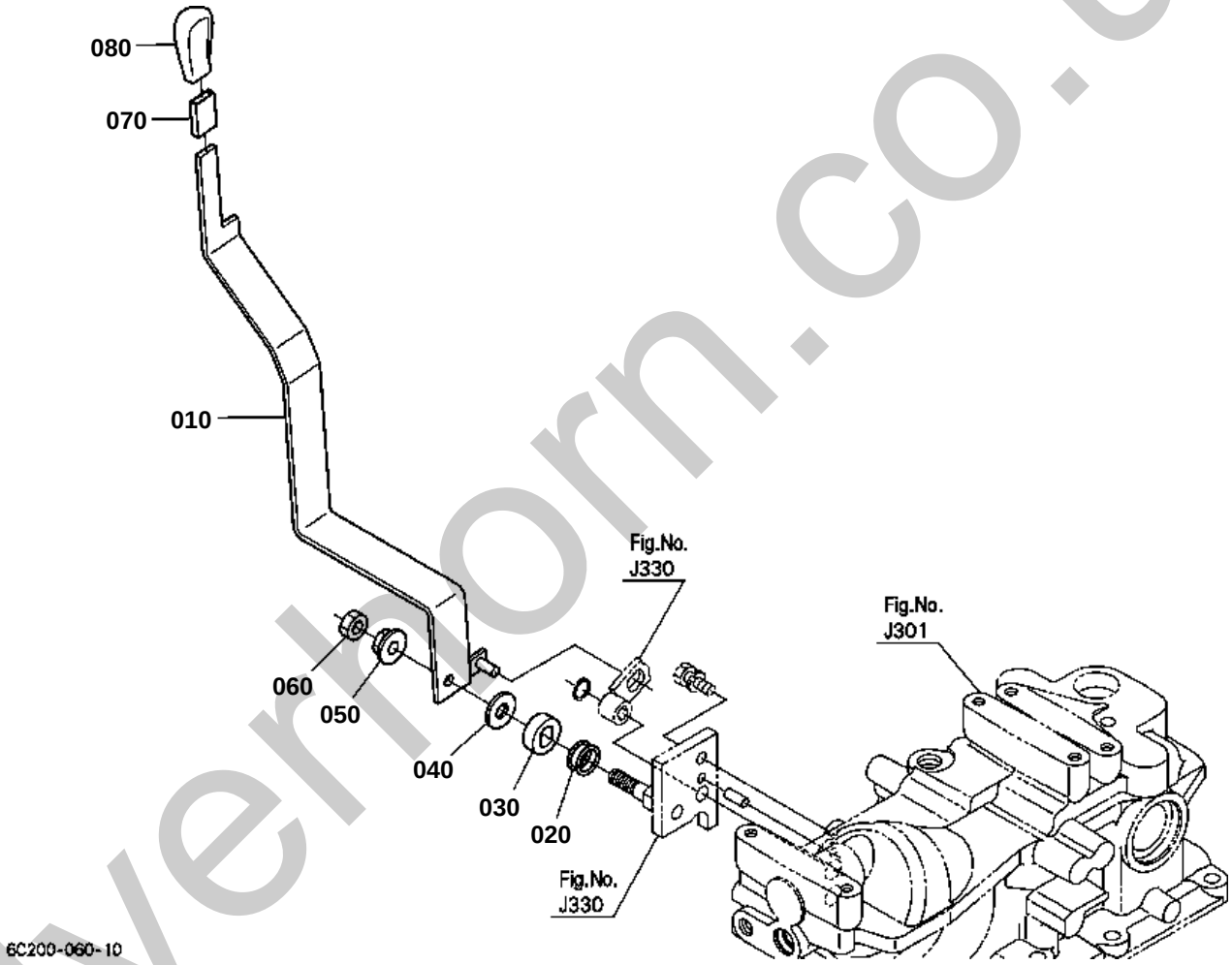

silverhorn.co.uk

POSITON CONTROL LEVER

↔ Interchangeable; ≠ not interchangeable; ← new for old; → old for new

REF.No	Part No.	Description	Q'ty	S.No.	I/C	REMARKS	Weight (kgf)	Weight (lb)
010	6C200-38210	LEVER POSITION	1				1.38	3.036
020	33251-10320	SPRING ACCEL.LEVER	1				0.012	0.0264
030	6C200-38250	COLLAR	1				0	0
040	PA401-46640	PLATE FRICTION	1				0.025	0.055
050	02131-50100	NUT	1				0.01	0.022
060	02118-50100	NUT	1				0.005	0.011
070	6C040-42760	CUSHION	1				0.003	0.0066
080	6A700-38242	GRIP	1				0.055	0.121

silverhorn.co.uk

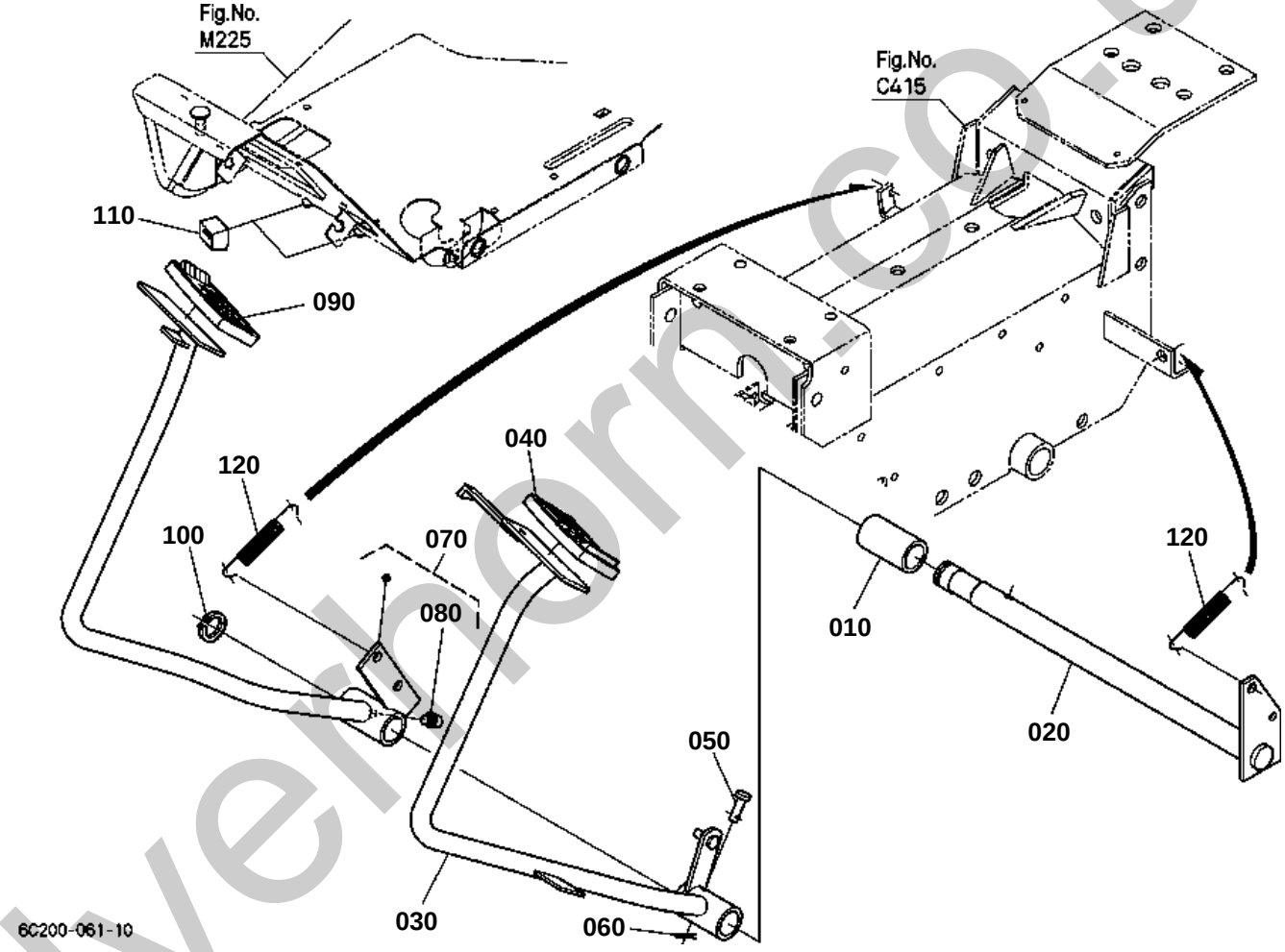

silverhorn.co.uk

BRAKE PEDAL

↔ Interchangeable; ≠ not interchangeable; ← new for old; → old for new

REF.No	Part No.	Description	Q'ty	S.No.	I/C	REMARKS	Weight (kgf)	Weight (lb)
010	6C200-42130	PIPE PEDAL	1				0	0
020	6C200-42310	SHAFT PEDAL	1				0	0
030	6C200-42322	PEDAL BRAKE LH	1				0	0
040	T2050-44120	COVER PEDAL	1				0.07	0.154
050	05122-50840	PIN JOINT	1				0.017	0.0374
060	05511-50218	PIN SPLIT	1				0.001	0.0022
070	6C200-42352	ASSY PEDAL BRAKE RH	1				0	0
080	6A320-42170	NIPPLE GREASE	1				0.005	0.011
090	T2050-44120	COVER PEDAL	1				0.07	0.154
100	04612-00240	CIR CLIP EXTERNAL	1				0.002	0.0044
110	6A320-42160	CUSHION	2				0.012	0.0264
120	66621-43270	SPRING BRAKE RETURN	2				0.04	0.088

silverhorn.co.uk

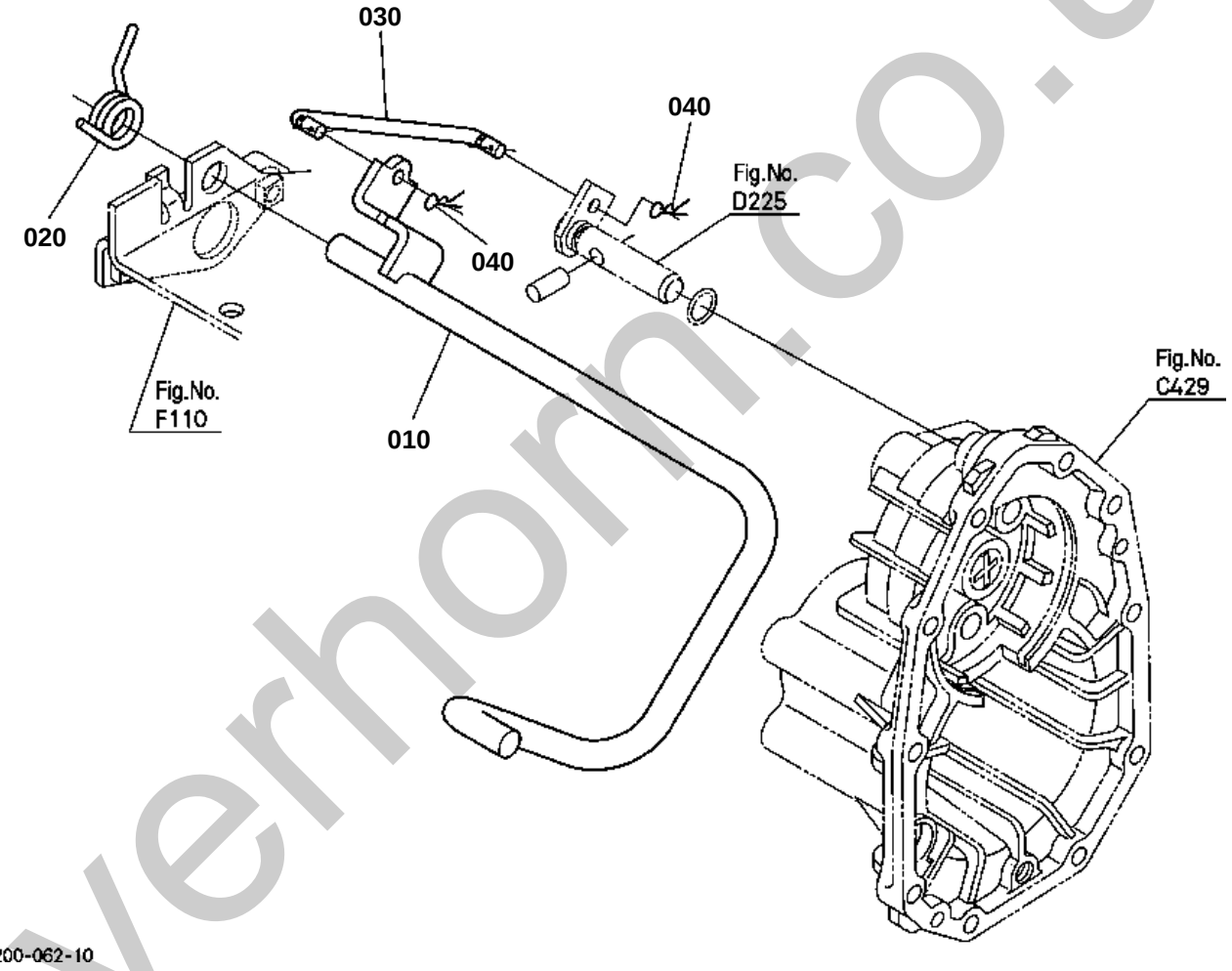

silverhorn.co.uk

DIFFERENTIAL LOCK PEDAL

↔ Interchangeable; ≠ not interchangeable; ← new for old; → old for new

REF.No	Part No.	Description	Q'ty	S.No.	I/C	REMARKS	Weight (kgf)	Weight (lb)
010	6C200-42412	PEDAL DIFF.LOCK	1				0	0
020	6C050-42890	SPRING	1				0.04	0.088
030	6C200-42440	ROD DIFF.LOCK	1				0	0
040	05525-50800	PIN SNAP	2				0.001	0.0022

silverhorn.co.uk

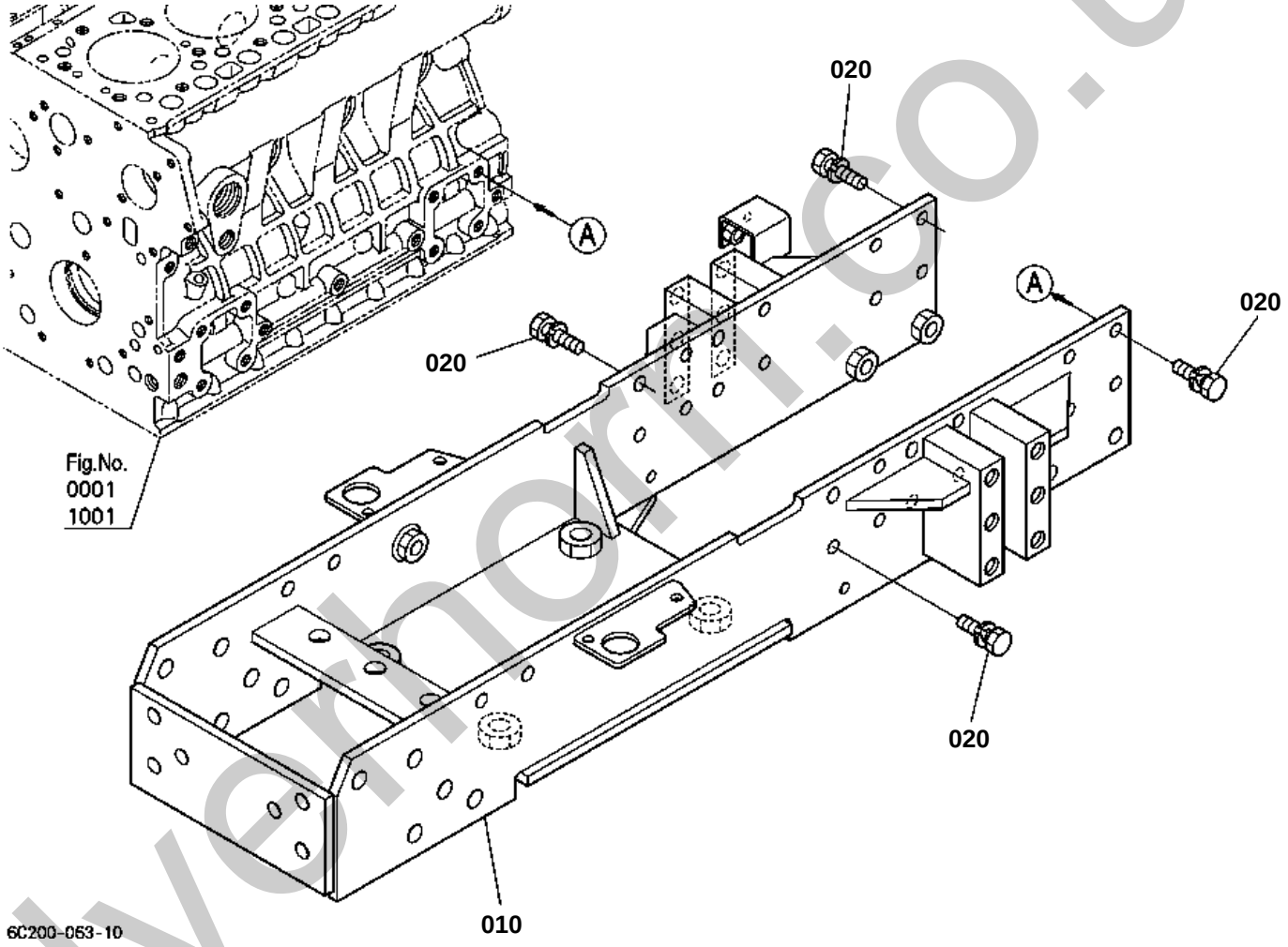

silverhorn.co.uk

↔ Interchangeable; ≠ not interchangeable; ← new for old; → old for new

REF.No	Part No.	Description	Q'ty	S.No.	I/C	REMARKS	Weight (kgf)	Weight (lb)
010	6C200-51216	COMP.FRAME FRONT	1				0	0
020	01138-61025	BOLT	16				0.25	0.55

silverhorn.co.uk

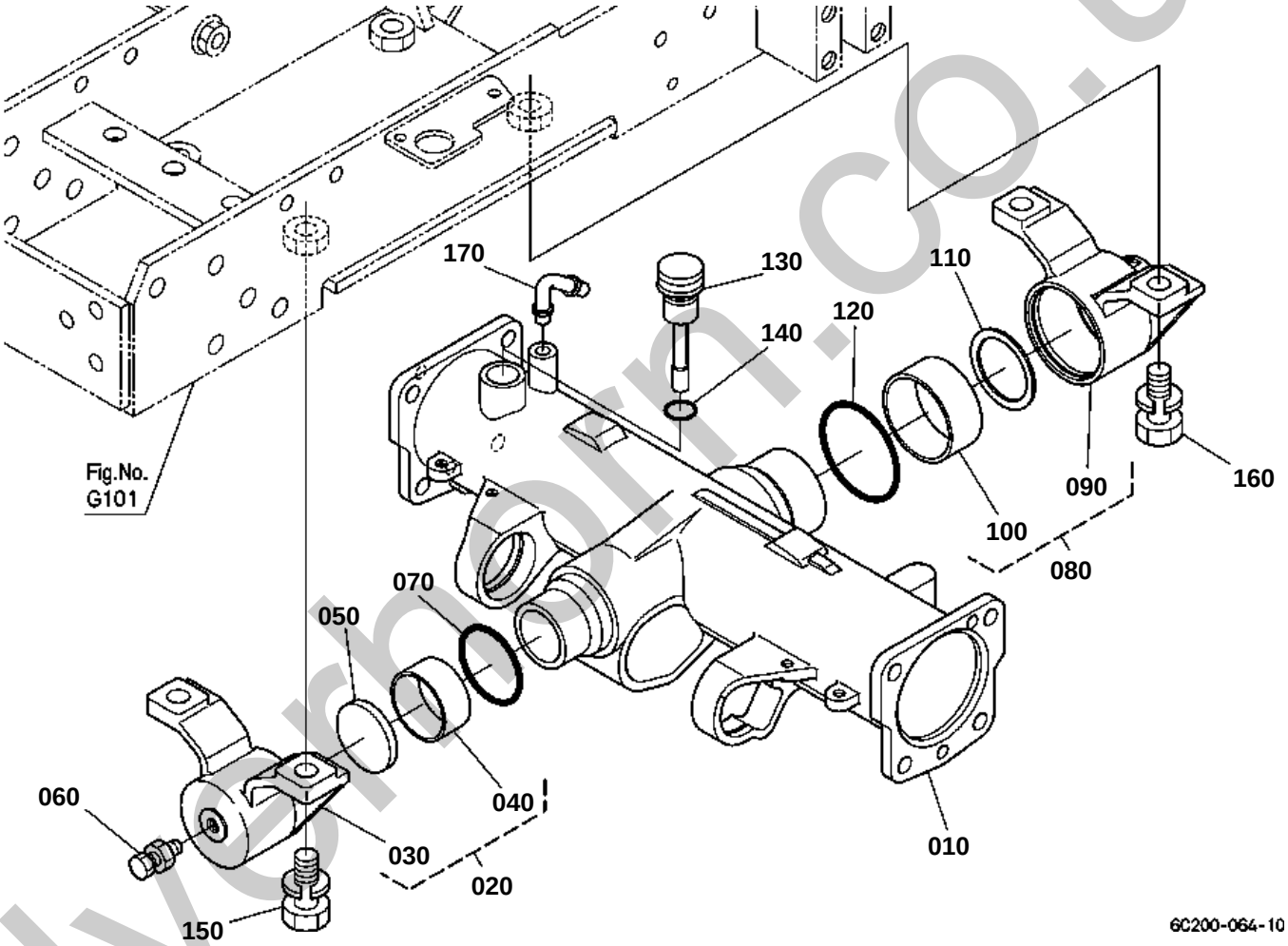

silverhorn.co.uk

FRONT AXLE CASE

↔ Interchangeable; ≠ not interchangeable; ← new for old; → old for new

REF.No	Part No.	Description	Q'ty	S.No.	I/C	REMARKS	Weight (kgf)	Weight (lb)
010	6C200-56114	CASE FRONT AXLE	1				0	0
020	6C200-56170	ASSY HOLDER	1				0	0
030	6C200-56130	HOLDER FRONT AXLE	1				0	0
040	08511-05025	BUSH	1				0.078	0.1716
050	37410-56180	COLLAR THRUST	1				0.06	0.132
060	6C040-56170	COMP.BOLT FRONT AXLE	1				0.04	0.088
070	04811-50600	O RING	1				0.002	0.0044
080	6C200-56180	ASSY HOLDER	1				0	0
090	6C200-56140	HOLDER FRONT AXLE	1				0	0
100	08511-06530	BUSH	1				0.12	0.264
110	6C040-56150	COLLAR THRUST	1				0.02	0.044
120	04811-50700	O RING	1				0.002	0.0044
130	6C040-56123	GAUGE OIL	1				0.024	0.0528
140	04816-00180	O RING	1				0.002	0.0044
150	01133-51645	BOLT	2				0.102	0.2244
160	01133-51645	BOLT	2				0.102	0.2244
170	6C040-36070	PIPE BREATHER	1				0.018	0.0396

silverhorn.co.uk

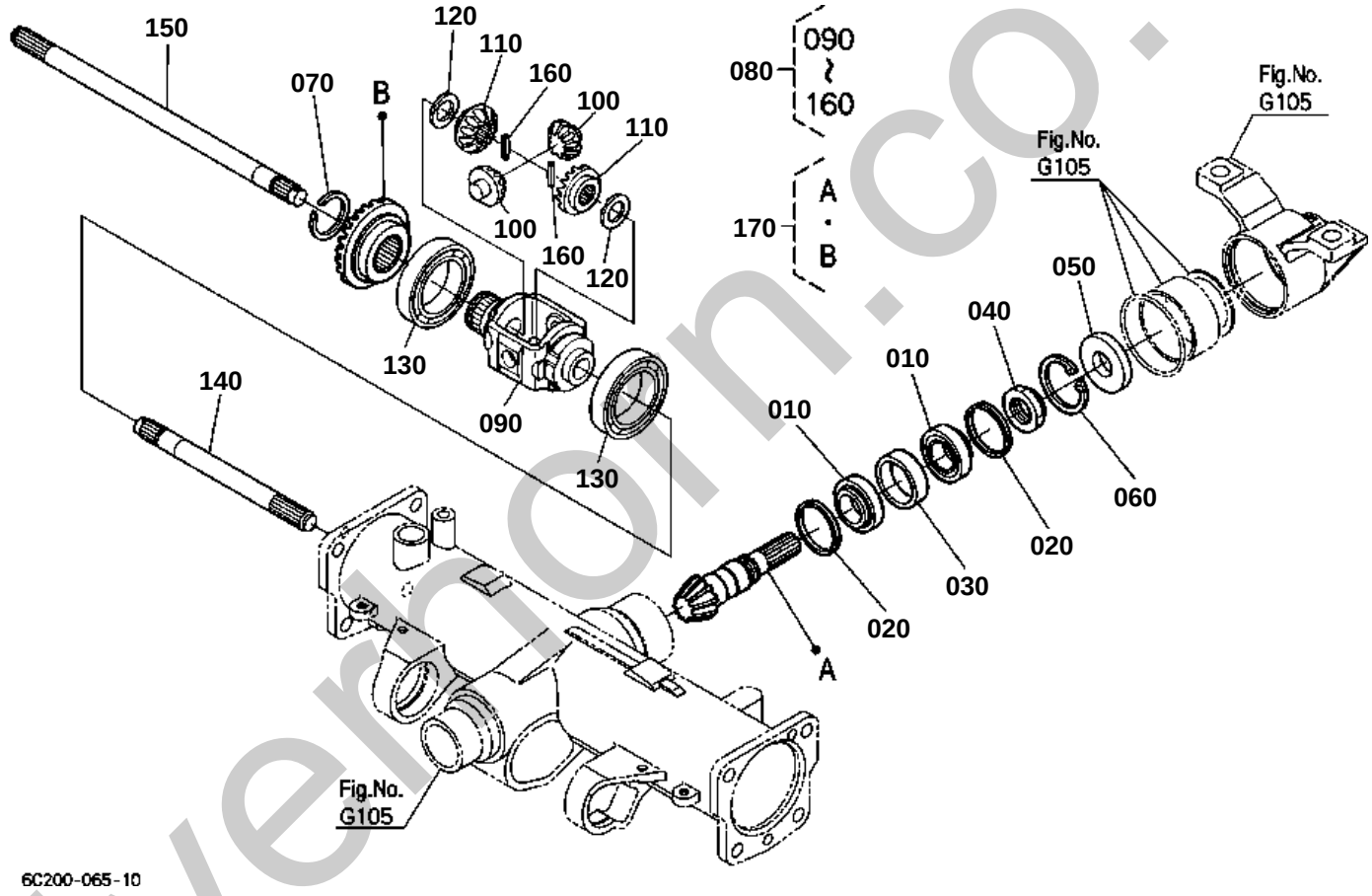

silvermorn.co.uk

↔ Interchangeable; ≠ not interchangeable; ← new for old; → old for new

REF.No	Part No.	Description	Q'ty	S.No.	I/C	REMARKS	Weight (kgf)	Weight (lb)
010	08711-30205	BEARING TAPER-ROLLER	2				0.148	0.3256
020	37410-58160	COLLAR	2			3.4mm	0.01	0.022
020	37410-58170	COLLAR	2			3.6mm	0.01	0.022
020	37410-58150	COLLAR	2			3.8mm	0.01	0.022
020	37410-58120	COLLAR	2			4.0mm	0.01	0.022
020	37410-58130	COLLAR	2			4.1mm	0.01	0.022
020	37410-58140	COLLAR	2			4.2mm	0.01	0.022
020	37410-56680	COLLAR	2			4.4mm	0.015	0.033
020	37410-56660	COLLAR	2			4.6mm	0.011	0.0242
030	37410-56690	COLLAR	1				0.04	0.088
040	37410-56710	NUT	1				0.03	0.066
050	09500-20408	SEAL OIL	1				0.012	0.0264
060	04611-00520	CIR CLIP INTERNAL	1				0.009	0.0198
070	6C040-56820	CIR CLIP EXTERNAL	1				0.003	0.0066
080	6A600-56900	ASSY DIFF.FRONT	1				3.14	6.908
090	6A600-56830	CASE DIFF.FRONT	1				0.73	1.606
100	6A320-56860	PINION BEVEL GEAR	2			10T	0.07	0.154
110	6A320-56910	GEAR BEVEL	2			14T	0.11	0.242
120	61361-14330	COLLAR	2				0.007	0.0154
130	08101-06010	BEARING BALL	2				0.262	0.5764
140	6A600-56880	SHAFT YOKE LH	1				0.56	1.232
150	6A600-56890	SHAFT YOKE RH	1				0.95	2.09
160	05411-00520	PIN SPRING	2				0.002	0.0044
170	6C040-97960	ASSY GEAR BEVEL	1				0.96	2.112

silverhorn.co.uk

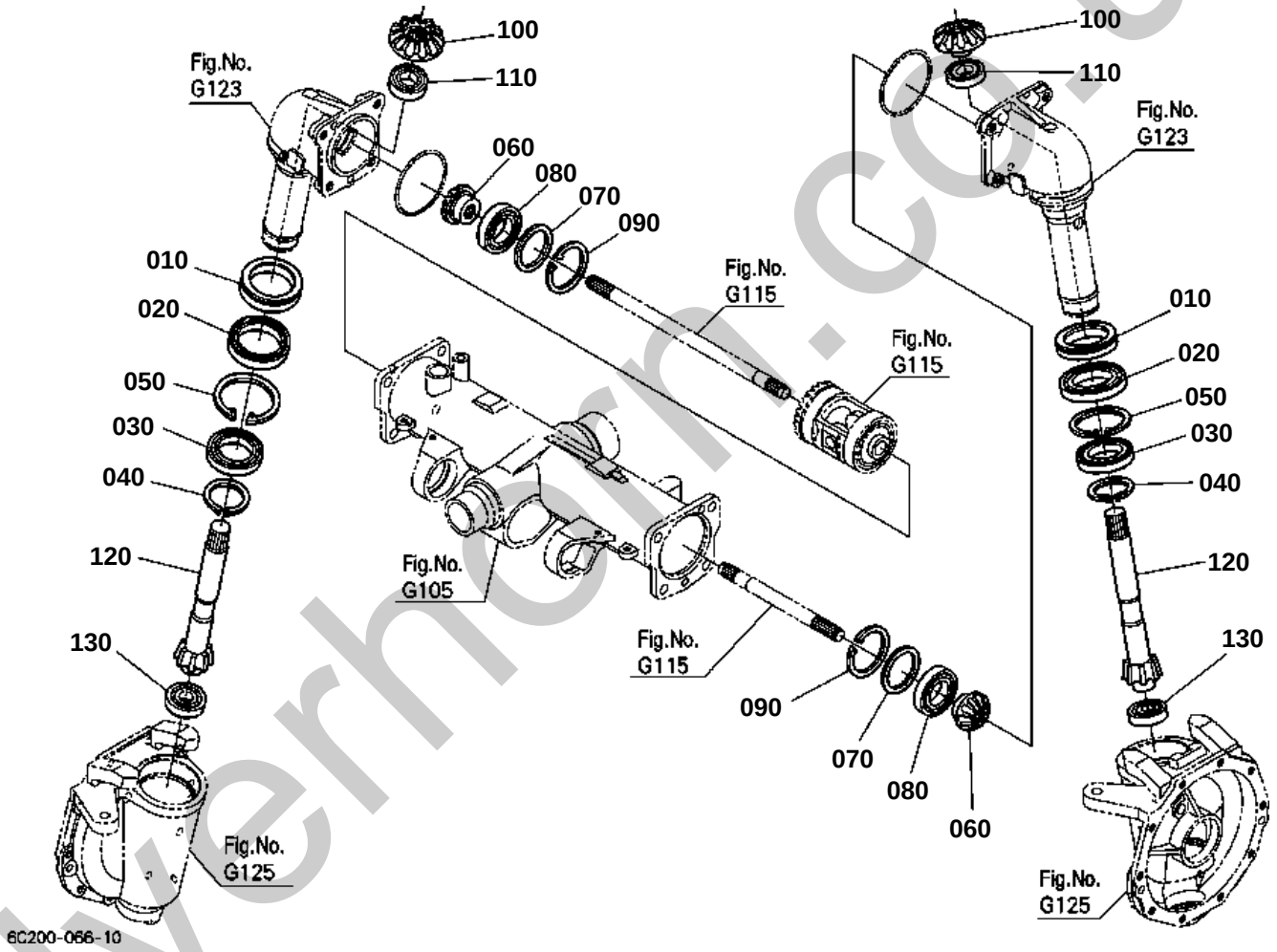

silverhorn.co.uk

DIFFERENTIAL GEAR SHAFT

↔ Interchangeable; ≠ not interchangeable; ← new for old; → old for new

REF.No	Part No.	Description	Q'ty	S.No.	I/C	REMARKS	Weight (kgf)	Weight (lb)
010	32721-56223	SEAL OIL	2				0.069	0.1518
020	08101-06911	BEARING BALL	2				0.2	0.44
030	08101-06009	BEARING BALL	2				0.22	0.484
040	04612-00450	CIR CLIP EXTERNAL	2				0.007	0.0154
050	04611-00750	CIR CLIP INTERNAL	2				0.019	0.0418
060	37410-57130	GEAR BEVEL	2			11T	0.25	0.55
070	6C040-57140	SHIM	2			0.8mm	0.006	0.0132
070	6C040-57130	SHIM	2			1.0mm	0.008	0.0176
070	6C040-57150	SHIM	2			1.2mm	0.009	0.0198
070	6C040-57160	SHIM	2			1.4mm	0.011	0.0242
080	08101-06007	BEARING BALL	2				0.16	0.352
090	04611-00620	CIR CLIP INTERNAL	2				0.011	0.0242
100	37410-57180	GEAR BEVEL	2			16T	0.32	0.704
110	6C200-57190	BEARING BALL	2				0	0
120	6C200-57210	SHAFT GEAR	2			7T	0	0
130	08101-06304	BEARING BALL	2				0.146	0.3212

silverhorn.co.uk

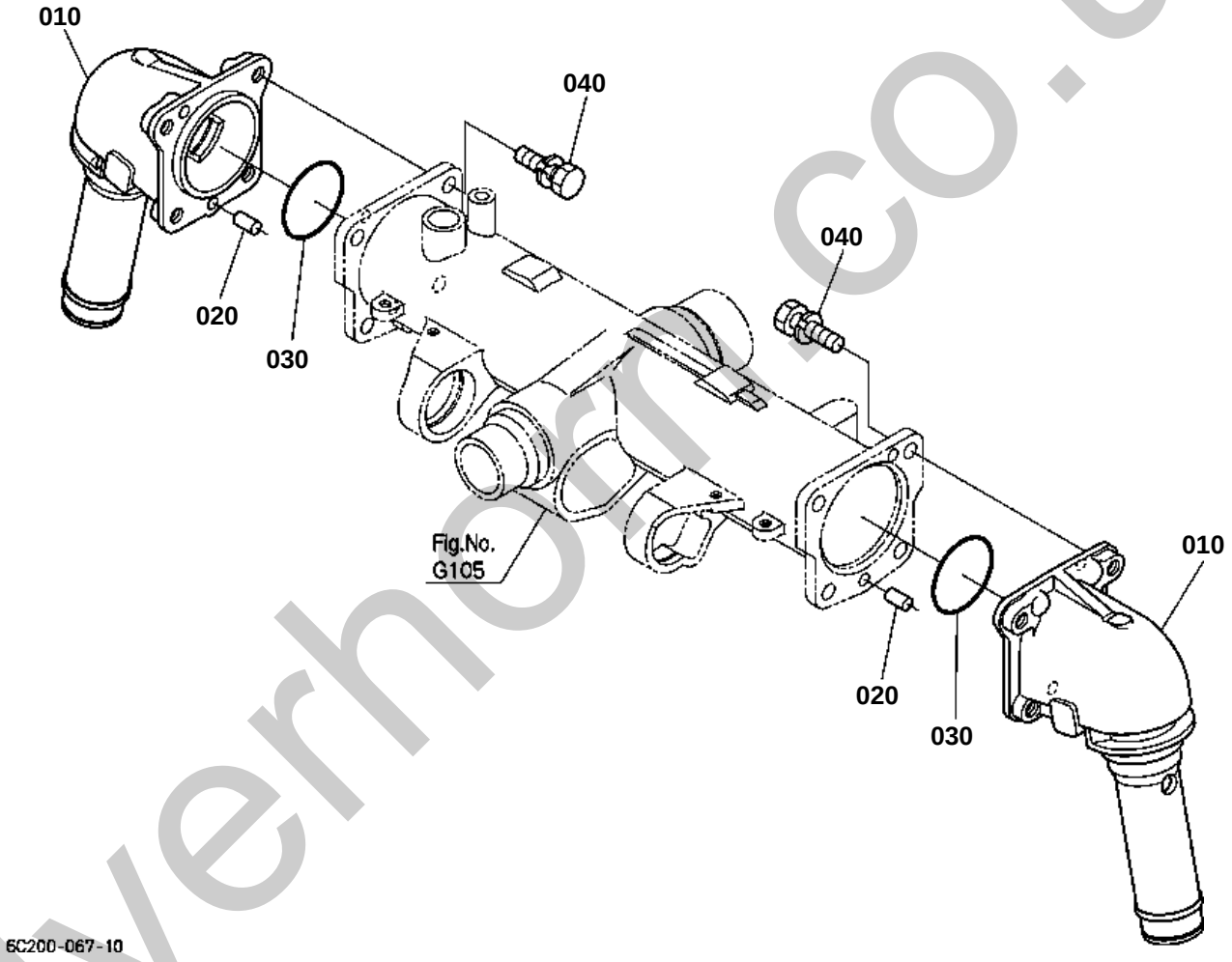

silverhorn.co.uk

BEVEL GEAR CASE

↔ Interchangeable; ≠ not interchangeable; ← new for old; → old for new

REF.No	Part No.	Description	Q'ty	S.No.	I/C	REMARKS	Weight (kgf)	Weight (lb)
010	6C200-56210	CASE BEVEL GEAR	2				0	0
020	05012-01020	PIN STRAIGHT	4				0.013	0.0286
030	04811-50850	O RING	2				0.003	0.0066
040	01133-51230	BOLT	8				0.04	0.088

silverhorn.co.uk

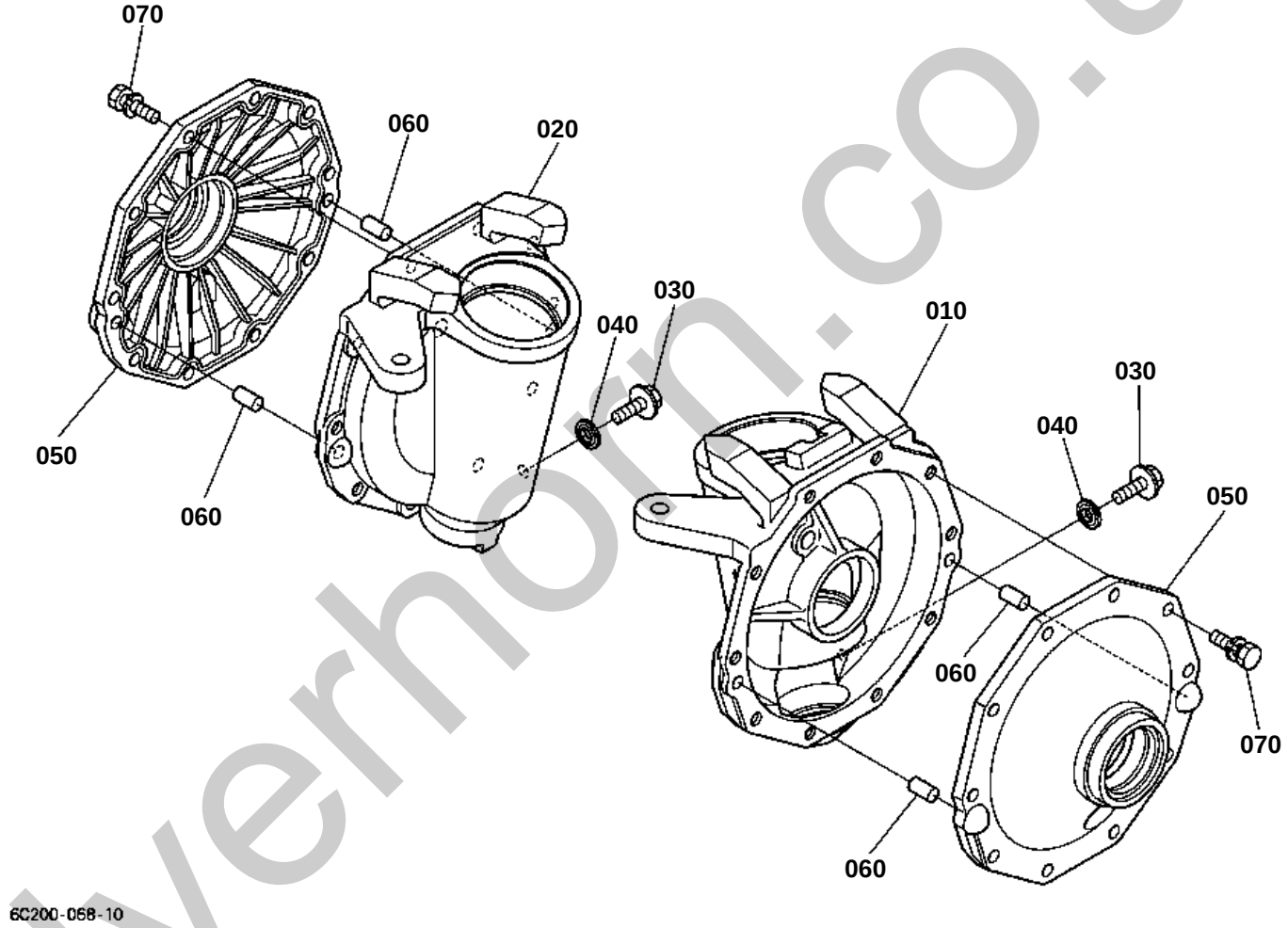

silverhorn.co.uk

↔ Interchangeable; ≠ not interchangeable; ← new for old; → old for new

REF.No	Part No.	Description	Q'ty	S.No.	I/C	REMARKS	Weight (kgf)	Weight (lb)
010	6C200-56310	CASE GEAR LH	1				0	0
020	6C200-56320	CASE GEAR RH	1				0	0
030	01774-51010	BOLT FLANGE	2				0.08	0.176
040	04717-01000	WASHER WITH RUBBER	2				0.001	0.0022
050	6C040-56345	COVER GEAR CASE	2				0.84	1.848
060	05012-01020	PIN STRAIGHT	4				0.013	0.0286
070	01133-51028	BOLT	20				0.027	0.0594

silverhorn.co.uk

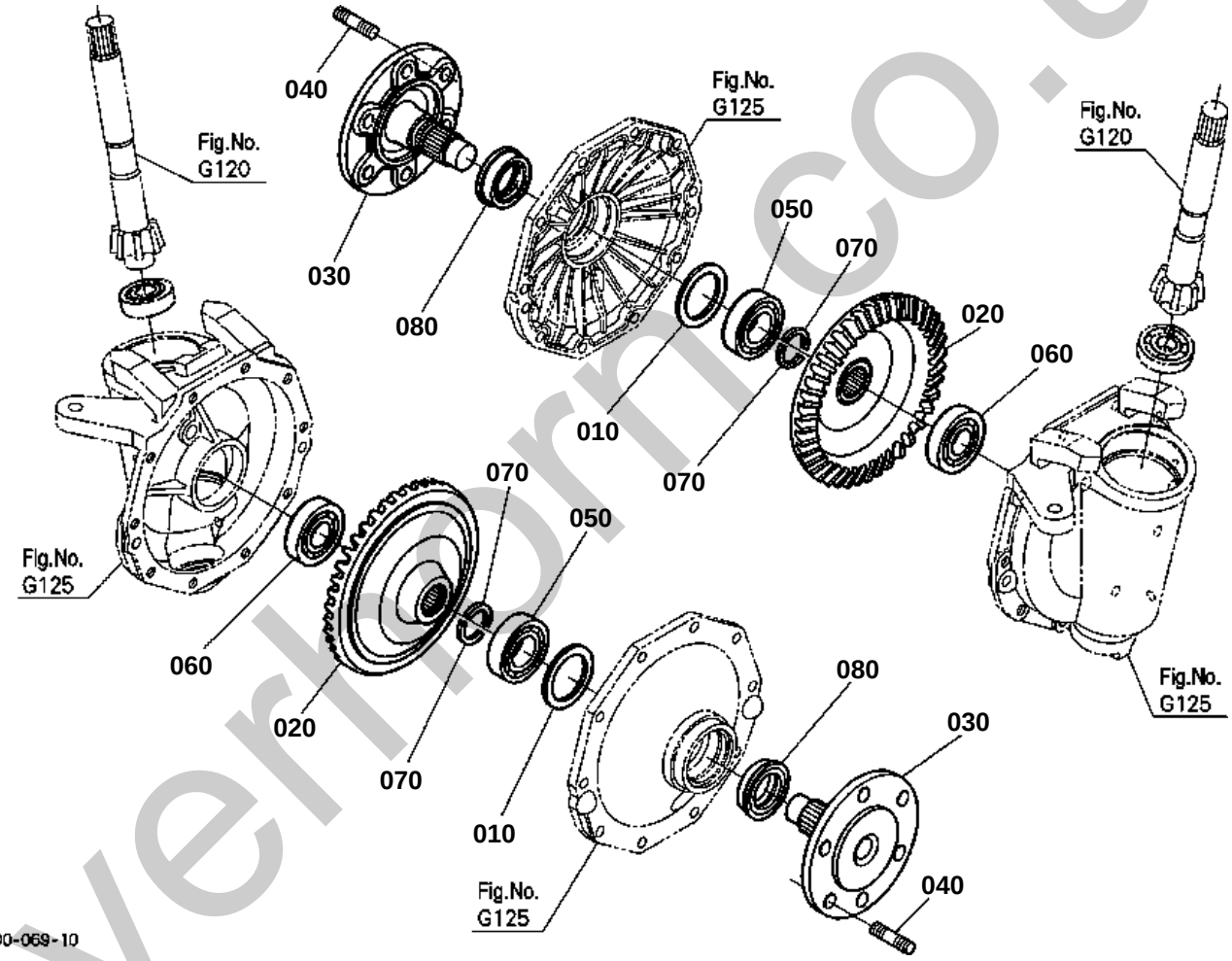

silverthorn.co.uk

↔ Interchangeable; ≠ not interchangeable; ← new for old; → old for new

REF.No	Part No.	Description	Q'ty	S.No.	I/C	REMARKS	Weight (kgf)	Weight (lb)
010	67211-14990	SHIM DIFF.GEAR SHAFT	2			0.3mm	0.002	0.0044
010	66621-15240	SHIM DIFF.GEAR SHAFT	2			0.2mm	0.001	0.0022
020	6C070-57310	GEAR BEVEL	2			41T	2.98	6.556
030	32721-57323	SHAFT FRONT AXLE	2				1.74	3.828
040	66591-56564	BOLT STUD	12				0.028	0.0616
050	08101-06206	BEARING BALL	2				0.196	0.4312
060	08101-06305	BEARING BALL	2				0.23	0.506
070	67156-56820	COLLAR SET	4				0.004	0.0088
080	37410-57340	SEAL OIL	2				0.045	0.099

silverhorn.co.uk

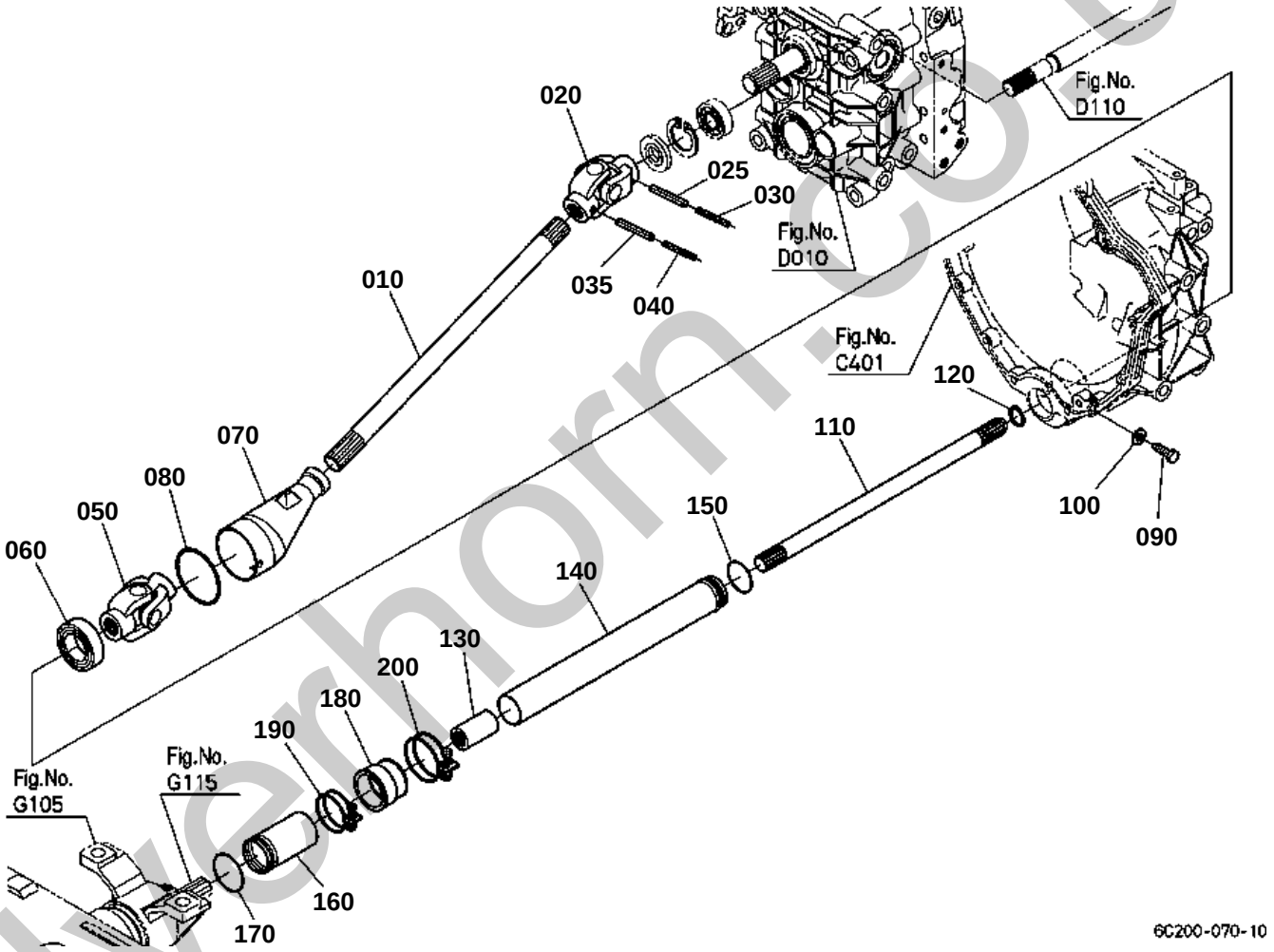

silverhorn.co.uk

FRONT DRIVE SHAFT

↔ Interchangeable; ≠ not interchangeable; ← new for old; → old for new

REF.No	Part No.	Description	Q'ty	S.No.	I/C	REMARKS	Weight (kgf)	Weight (lb)
010	6C200-13910	SHAFT DRIVE	1				0	0
020	6C040-57500	ASSY JOINT UNIVERSAL	1				0.6	1.32
025	05411-00640	PIN SPRING	1				0.006	0.0132
030	32721-57680	PIN SPRING	1				0.002	0.0044
035	05411-00640	PIN SPRING	1				0.006	0.0132
040	32721-57680	PIN SPRING	1				0.002	0.0044
050	6C200-13920	ASSY JOINT UNIVERSAL	1				0	0
060	08141-06007	BEARING BALL	1				0.147	0.3234
070	6C200-13940	COVER	1				0	0
080	04811-10670	O RING	1				0.001	0.0022
090	6C200-13990	BOLT	1				0	0
100	04512-60080	WASHER SPRING	1				0.002	0.0044
110	6C200-13950	SHAFT FRONT DRIVE	1				0	0
120	04612-00200	CIR CLIP EXTERNAL	1				0.001	0.0022
130	6C050-14520	COUPLING	1				0.099	0.2178
140	6C200-13970	COVER REAR	1				0	0
150	04816-06330	O RING	1				0.002	0.0044
160	6C200-13980	COVER FRONT	1				0	0
170	04816-06370	O RING	1				0.003	0.0066
180	37410-57630	JOINT PIPE	1				0.035	0.077
190	67955-58270	CLAMP HOSE	1				0.025	0.055
200	67955-58260	BAND AIR CLEANER	1				0.028	0.0616

silverhorn.co.uk

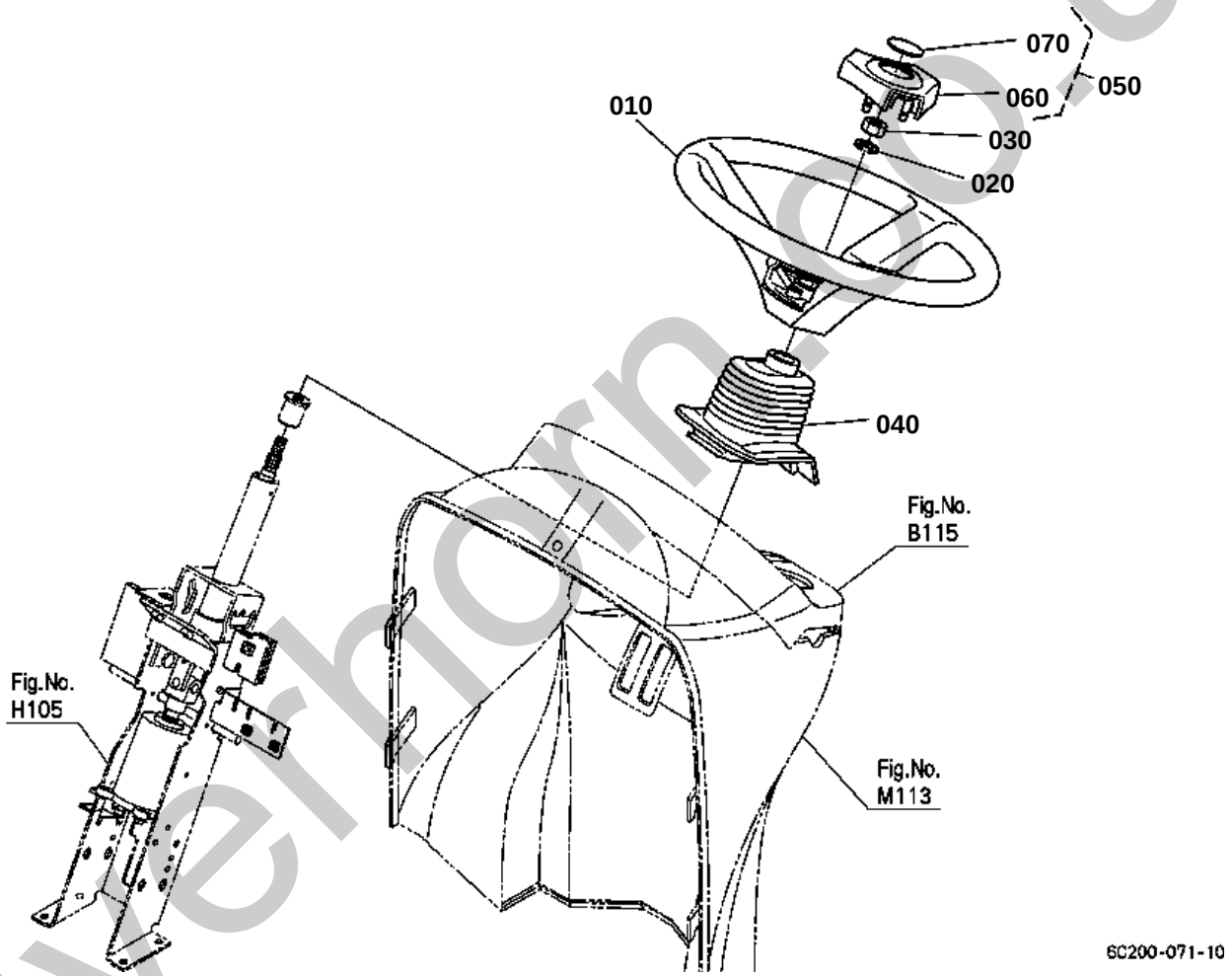

silverhorn.co.uk

STEERING HANDLE

↔ Interchangeable; ≠ not interchangeable; ← new for old; → old for new

REF.No	Part No.	Description	Q'ty	S.No.	I/C	REMARKS	Weight (kgf)	Weight (lb)
010	6C170-41410	WHEEL STEERING	1				3.2	7.04
020	04512-60120	WASHER SPRING	1				0.005	0.011
030	02174-50120	NUT	1				0.01	0.022
040	6C200-53550	BOOT STEERING	1				0	0
050	6C200-41420	ASSY PAD STEERING	1				0	0
060	6C170-41430	PAD STEERING	1				0.035	0.077
070	6C200-41440	MARK STEERING WHEEL	1				0	0

silverhorn.co.uk

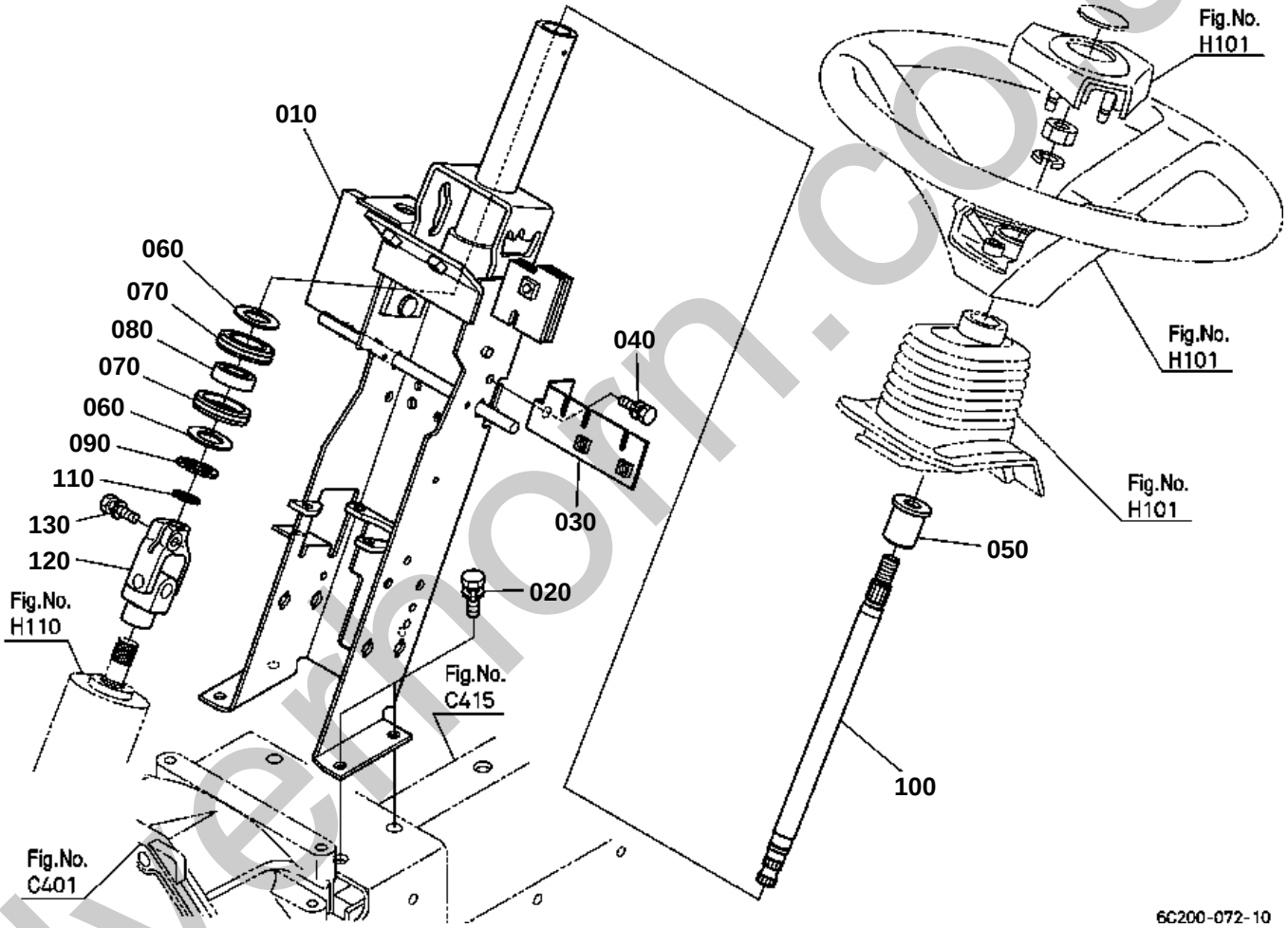

silverthorn.co.uk

↔ Interchangeable; ≠ not interchangeable; ← new for old; → old for new

REF.No	Part No.	Description	Q'ty	S.No.	I/C	REMARKS	Weight (kgf)	Weight (lb)
010	6C200-41303	POST STEERING	1				0	0
020	01123-51025	BOLT	4				0.02	0.044
030	6C200-41390	BRACKET	1				0	0
040	01123-60816	BOLT	1				0.01	0.022
050	6A700-41512	BUSH	1				0.02	0.044
060	6C040-41390	COLLAR	2				0.007	0.0154
070	6A100-41520	COVER BEARING	2				0.009	0.0198
080	08141-06002	BEARING BALL	1				0.029	0.0638
090	04611-00420	CIR CLIP INTERNAL	1				0.006	0.0132
100	6C200-41610	SHAFT STEERING	1				0	0
110	04612-00150	CIR CLIP EXTERNAL	1				0.001	0.0022
120	6C200-41620	JOINT UNIVERSAL	1				0	0
130	01123-50825	BOLT	1				0.013	0.0286

silverhorn.co.uk

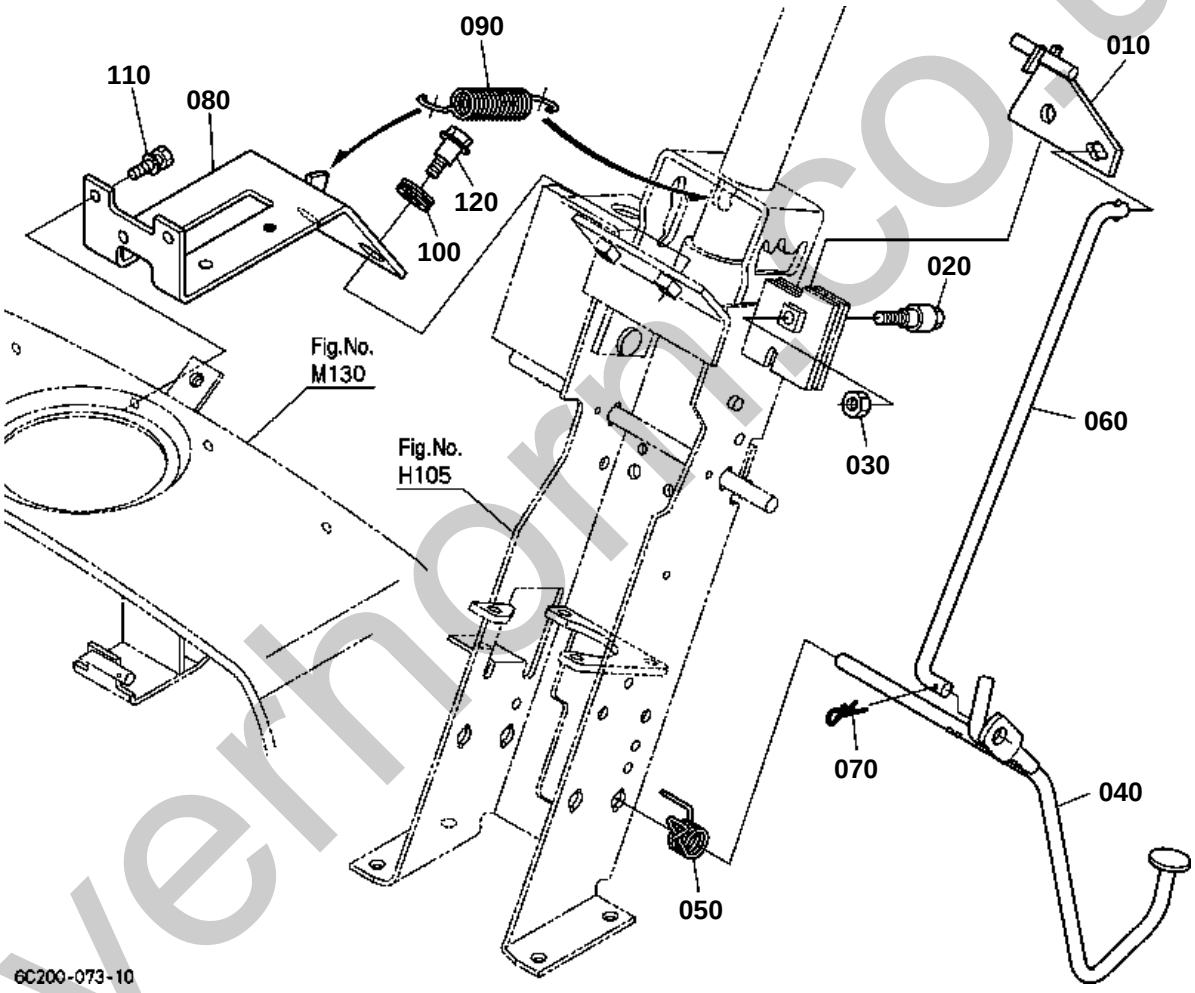

silverhorn.co.uk

TILT PEDAL

↔ Interchangeable; ≠ not interchangeable; ← new for old; → old for new

REF.No	Part No.	Description	Q'ty	S.No.	I/C	REMARKS	Weight (kgf)	Weight (lb)
010	6C200-41332	LEVER TILT	1				0	0
020	6A700-41392	BOLT	1				0.04	0.088
030	02114-50080	NUT	1				0.005	0.011
040	6C200-41312	PEDAL TILT	1				0	0
050	6C200-41340	SPRING	1				0	0
060	6C200-41320	ROD TILT	1				0	0
070	05525-61000	PIN SNAP	1				0.002	0.0044
080	6C200-41370	STAY STEERING POST	1				0	0
090	T1270-47140	SPRING	1				0.045	0.099
100	6A700-41370	CUSHION	2				0.003	0.0066
110	01023-50620	BOLT	2				0.006	0.0132
120	6C040-51342	BOLT	2				0.017	0.0374

silverhorn.co.uk

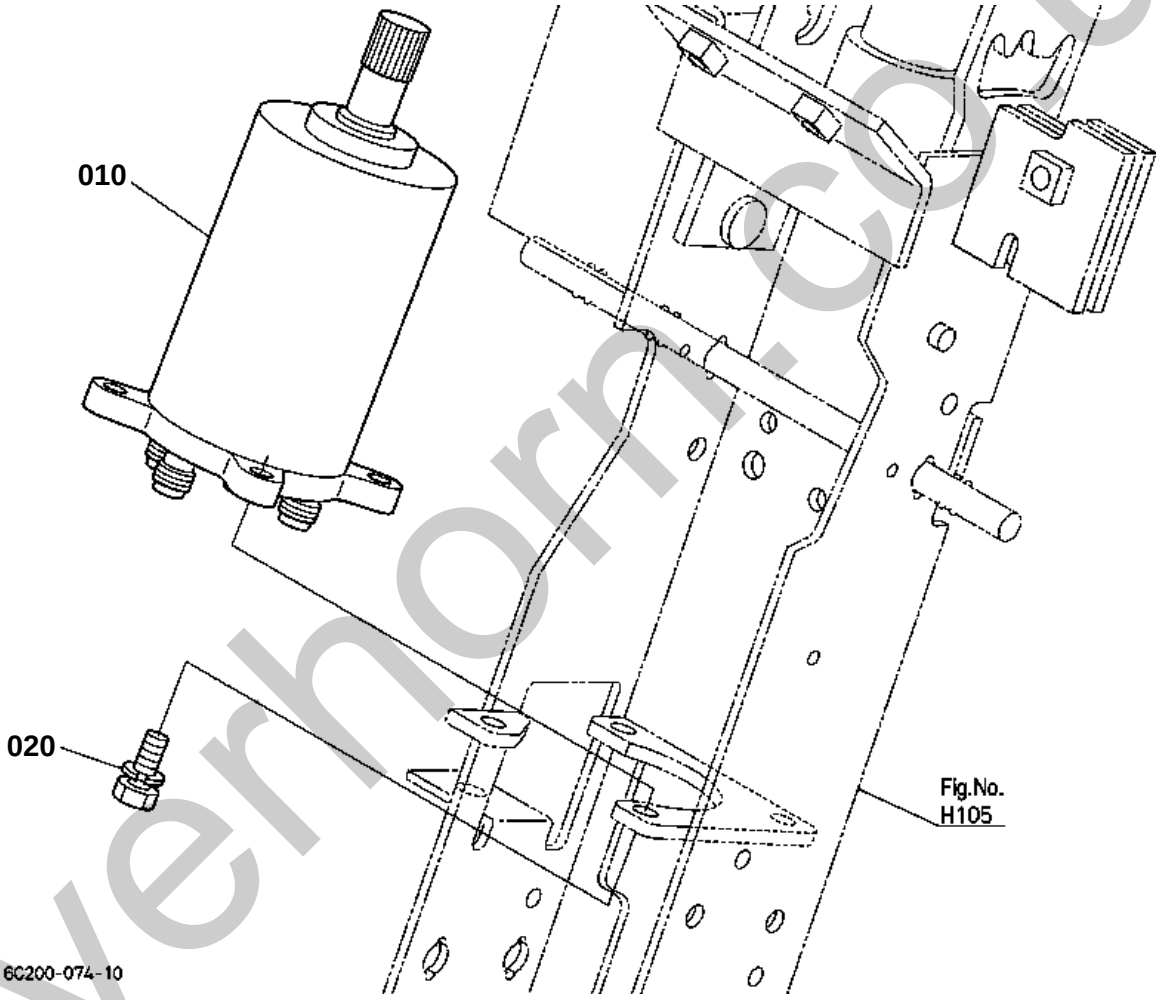

silverhorn.co.uk

↔ Interchangeable; ≠ not interchangeable; ← new for old; → old for new

REF.No	Part No.	Description	Q'ty	S.No.	I/C	REMARKS	Weight (kgf)	Weight (lb)
010	6C200-41100	STEERING POWER	1				0	0
020	01123-60816	BOLT	4				0.01	0.022

silverhorn.co.uk

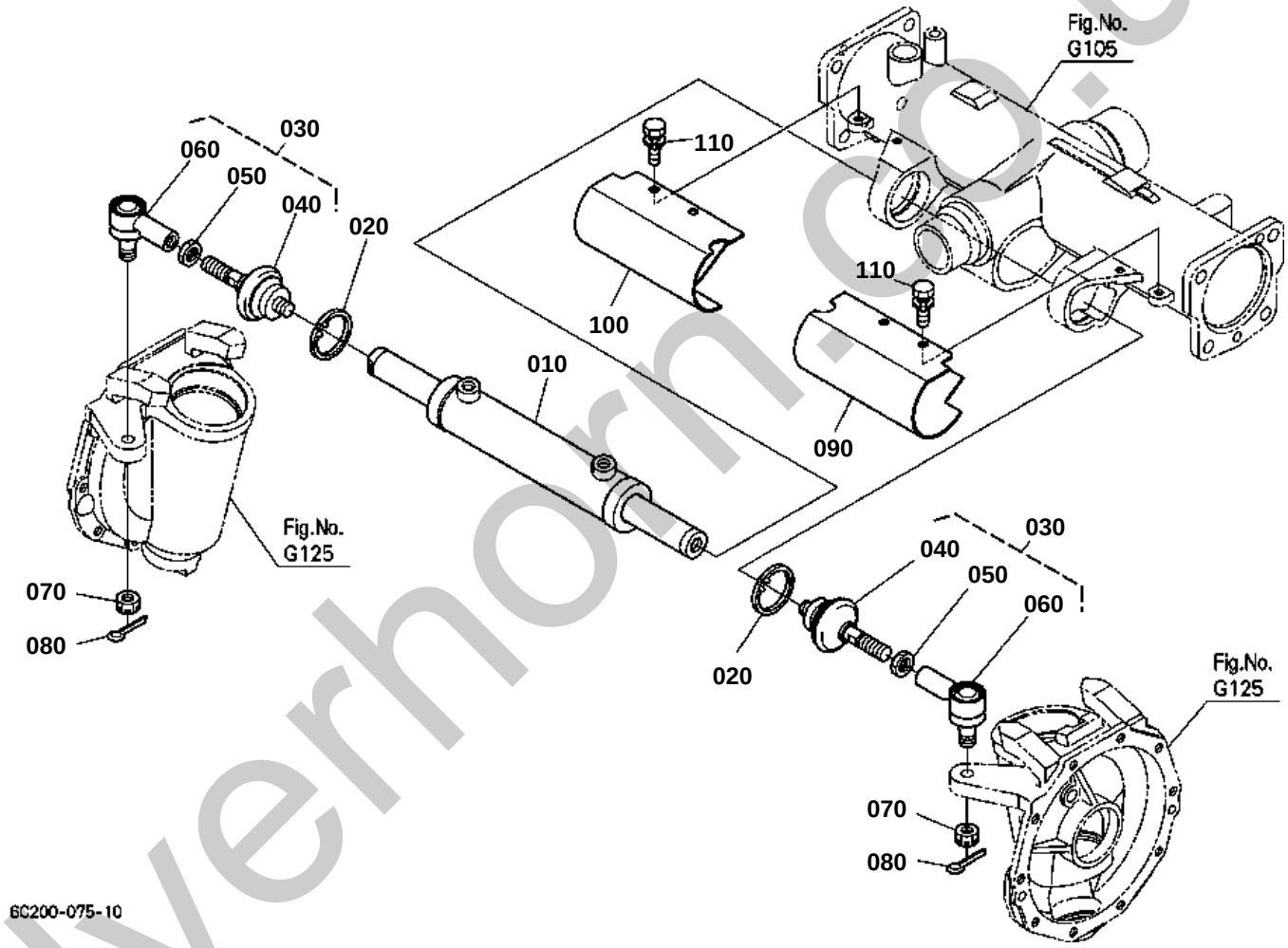

silverhorn.co.uk

STEERING LINKAGE

↔ Interchangeable; ≠ not interchangeable; ← new for old; → old for new

REF.No	Part No.	Description	Q'ty	S.No.	I/C	REMARKS	Weight (kgf)	Weight (lb)
010	6C200-57302	ASSY CYLINDER STRG.	1				0	0
020	04611-00520	CIR CLIP INTERNAL	2				0.009	0.0198
030	6C200-57410	ROD TIE STEERING	2				0	0
040	K2561-01630	JOINT AXIAL BALL	2				0.313	0.6886
050	K2561-01640	NUT	2				0.018	0.0396
060	6C200-57420	BALL JOINT	2				0	0
070	38240-12830	NUT	2				0.008	0.0176
080	05511-50330	PIN SPLIT	2				0.005	0.011
090	6C200-57482	COVER LH STEERING	1				0	0
100	6C200-57492	COVER RH STEERING	1				0	0
110	01123-50812	BOLT	4				0.1	0.22

silverhorn.co.uk

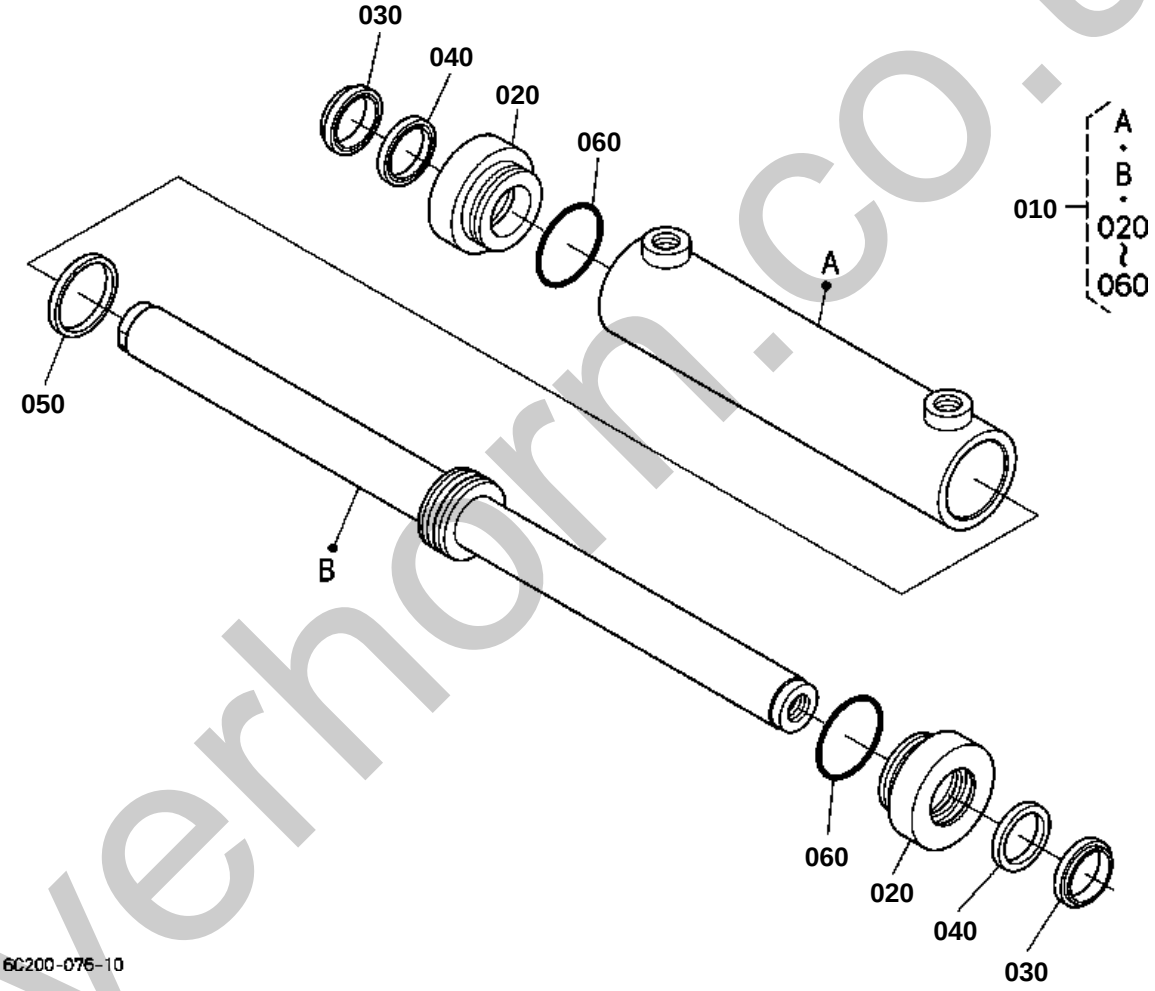

silverhorn.co.uk

↔ Interchangeable; ≠ not interchangeable; ← new for old; → old for new

REF.No	Part No.	Description	Q'ty	S.No.	I/C	REMARKS	Weight (kgf)	Weight (lb)
010	6C200-57302	ASSY CYLINDER STRG.	1				0	0
020	6C200-57320	COVER ROD	2				0	0
030	6C200-57340	SEAL DUST	2				0	0
040	6C200-57350	GASKET U	2				0	0
050	6C200-57362	GASKET	1				0	0
060	04817-50350	O RING	2				0.003	0.0066

silverhorn.co.uk

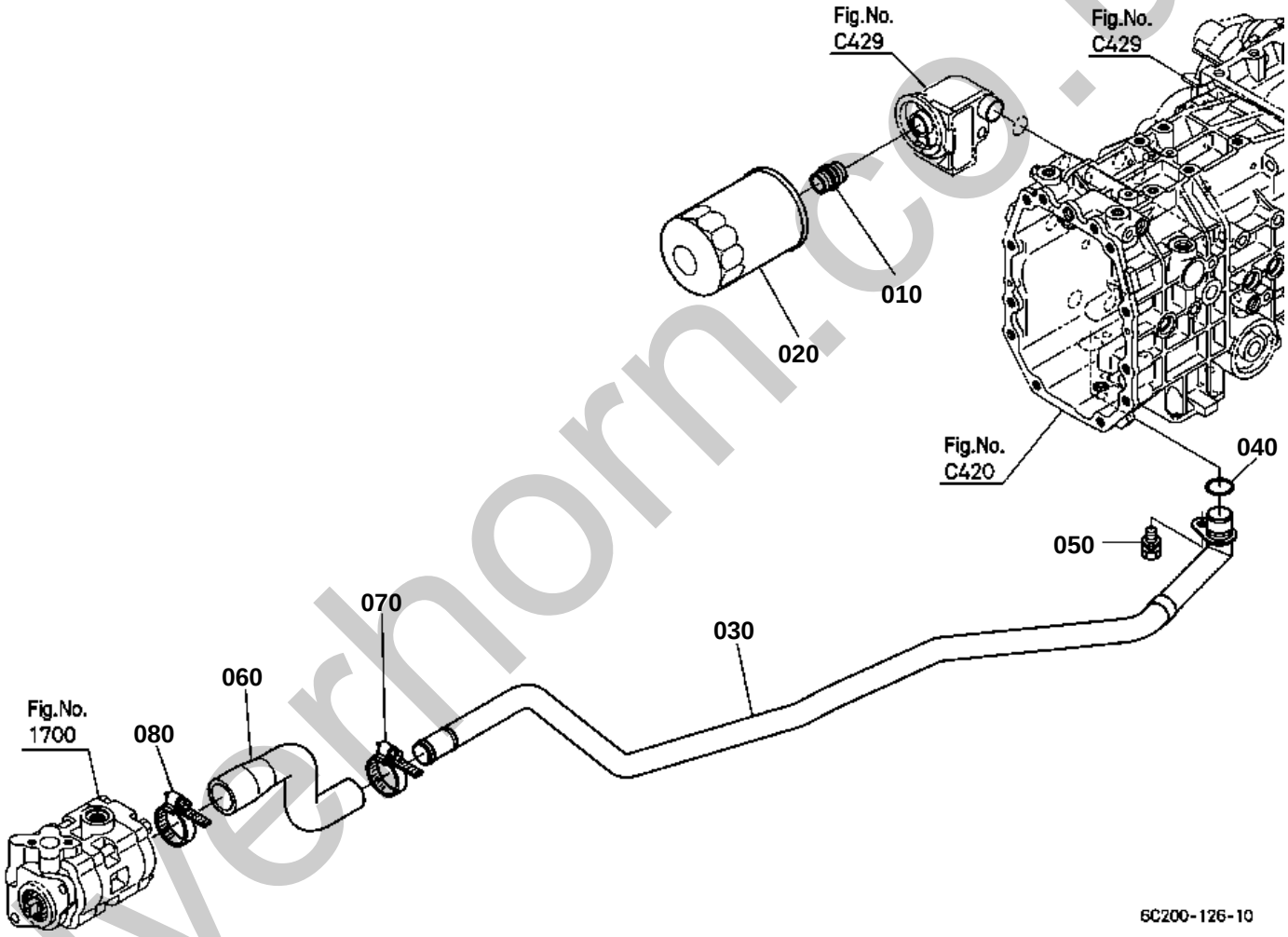

silverhorn.co.uk

HYDRAULIC OIL LINE(SUCTION)

↔ Interchangeable; ≠ not interchangeable; ← new for old; → old for new

REF.No	Part No.	Description	Q'ty	S.No.	I/C	REMARKS	Weight (kgf)	Weight (lb)
010	38240-37780	JOINT SCREW	1				0.03	0.066
020	67955-37710	CARTRIDGE OIL FILTER	1				0.39	0.858
030	6C200-39112	PIPE SUCTION	1				0	0
040	04816-00200	O RING	1				0.003	0.0066
050	01123-60816	BOLT	1				0.01	0.022
060	6C070-39150	HOSE INLET	1				0.125	0.275
070	67955-36230	CLAMP	1				0.023	0.0506
080	67955-36230	CLAMP	1				0.023	0.0506

silverhorn.co.uk

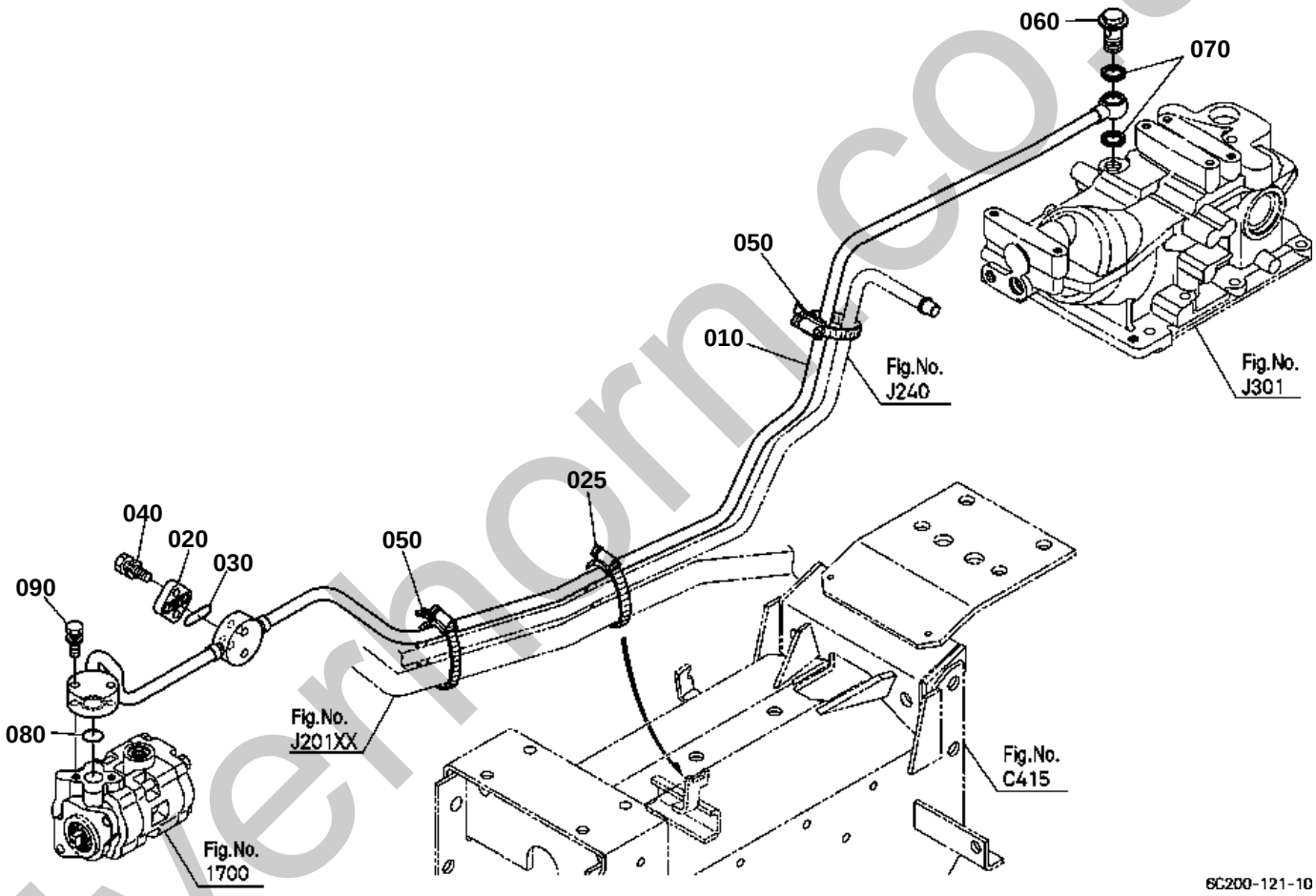

silverhorn.co.uk

HYDRAULIC OIL LINE(DELIVERY)

↔ Interchangeable; ≠ not interchangeable; ← new for old; → old for new

REF.No	Part No.	Description	Q'ty	S.No.	I/C	REMARKS	Weight (kgf)	Weight (lb)
010	6C220-39212	PIPE	1				0	0
020	6C040-36620	CAP	1				0.022	0.0484
025	66704-58250	CLAMP	1				0.025	0.055
030	37410-36630	O RING	1				0.001	0.0022
040	01123-50830	BOLT	2				0.015	0.033
050	67955-36230	CLAMP	2				0.023	0.0506
060	6A320-39292	BOLT JOINT	1				0.06	0.132
070	67111-37180	GASKET	2				0.003	0.0066
080	04817-00200	O RING	1				0.011	0.0242
090	01123-50825	BOLT	2				0.013	0.0286

silverhorn.co.uk

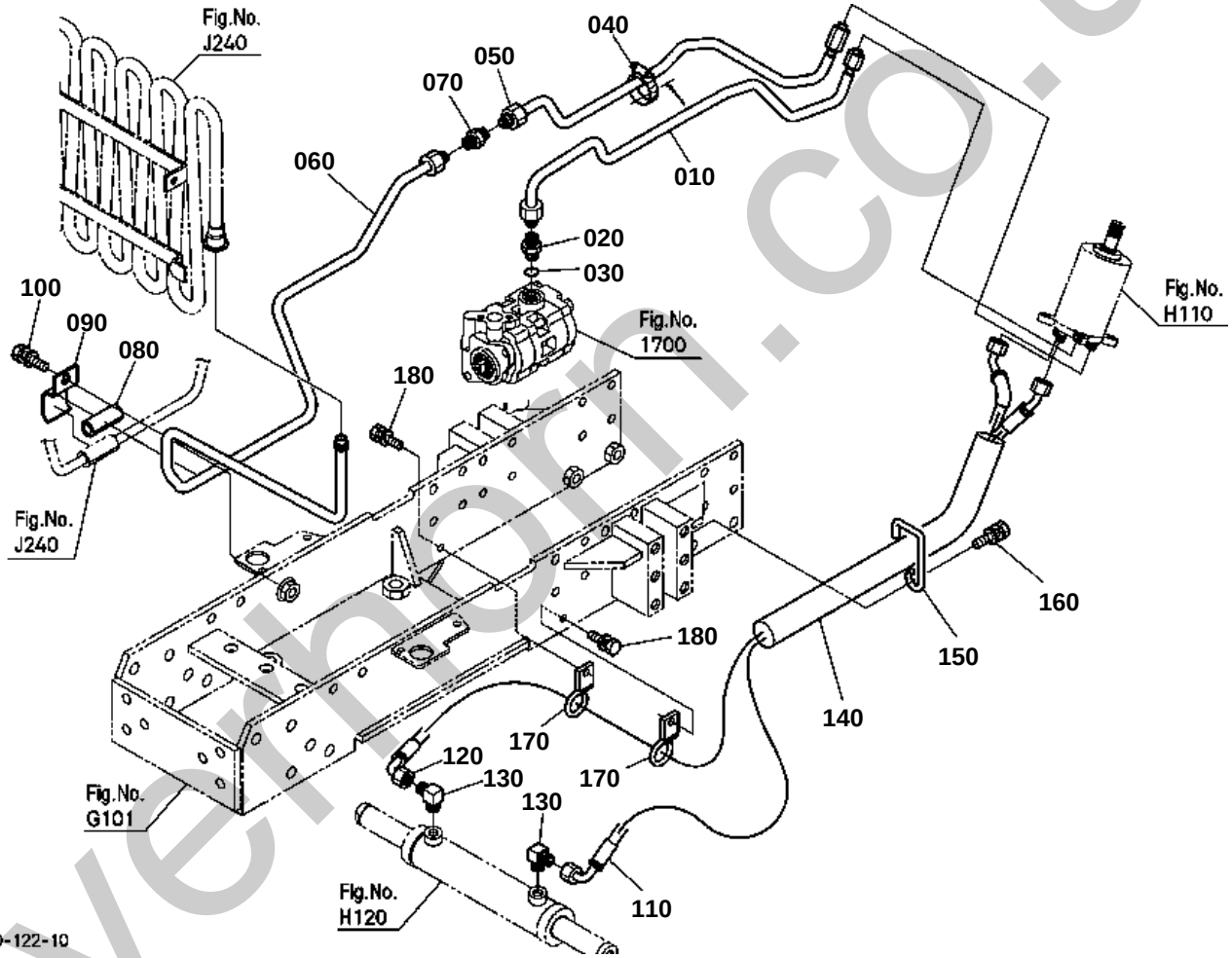

silvermorn.co.uk

HYDRAULIC OIL LINE(STEERING)

↔ Interchangeable; ≠ not interchangeable; ← new for old; → old for new

REF.No	Part No.	Description	Q'ty	S.No.	I/C	REMARKS	Weight (kgf)	Weight (lb)
010	6C220-39230	PIPE	1				0	0
020	06012-51223	JOINT PIPE	1				0.04	0.088
030	04816-00110	O RING	1				0.001	0.0022
040	67955-36230	CLAMP	1				0.023	0.0506
050	6C200-39310	PIPE	1				0	0
060	6C200-39322	PIPE	1				0	0
070	06013-51203	JOINT PIPE	1				0.035	0.077
080	6C140-39250	CUSHION	1				0.014	0.0308
090	6C200-39240	CLAMP	1				0	0
100	01135-51030	BOLT	1				0.03	0.066
110	6C200-57512	HOSE HYDRAULIC	1				0	0
120	6C200-57522	HOSE HYDRAULIC	1				0	0
130	06114-52023	JOINT	2				0.05	0.11
140	6C200-57552	TUBE GUARD	1				0	0
150	6C200-57560	HOLDER HOSE	1				0	0
160	01135-51035	BOLT	1				0.03	0.066
170	6C200-57570	HOLDER HOSE	2				0	0
180	01123-50820	BOLT	2				0.011	0.0242

silverhorn.co.uk

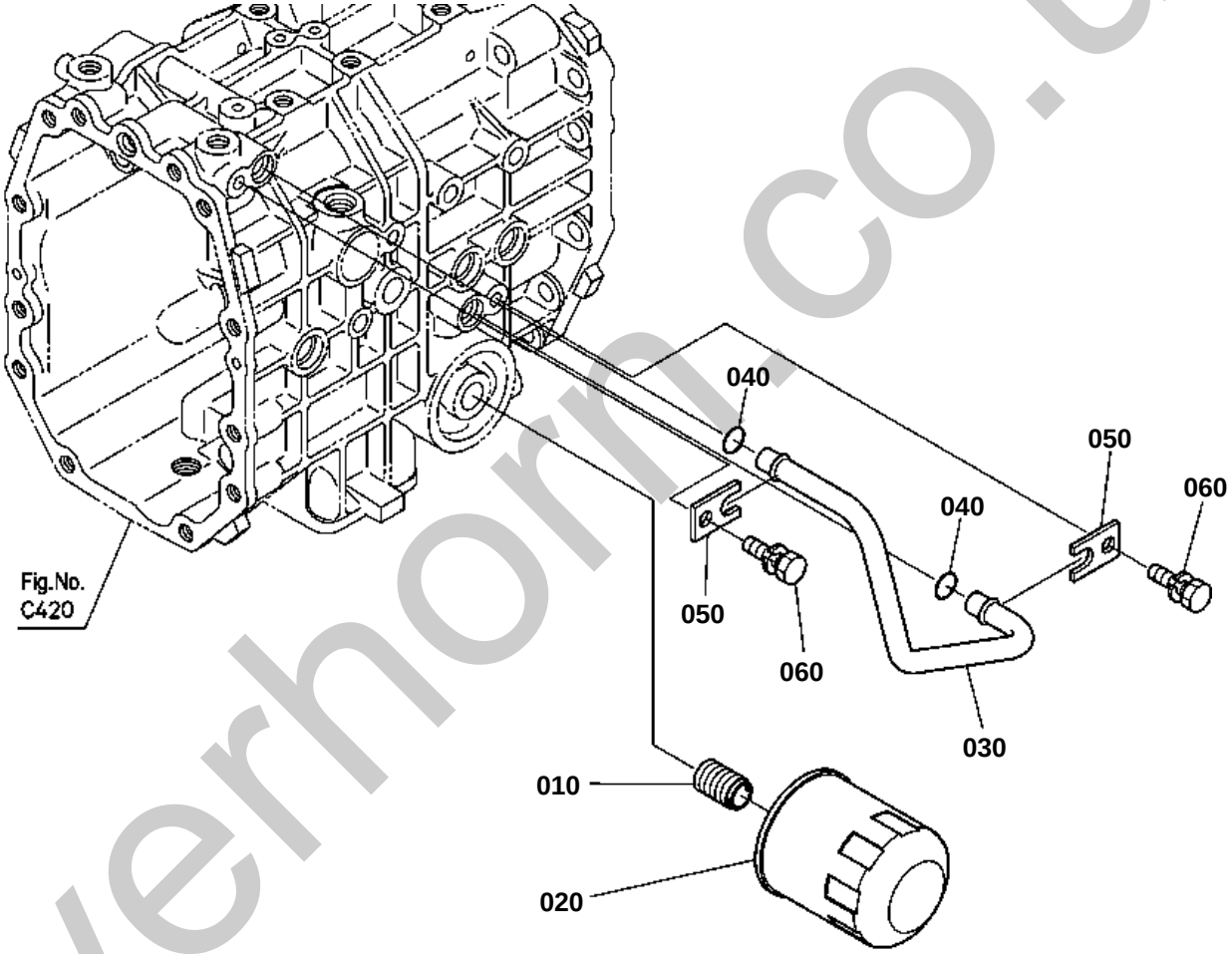

6C200-081-10

silverhorn.co.uk

HYDRAULIC OIL LINE (HST)

↔ Interchangeable; ≠ not interchangeable; ← new for old; → old for new

REF.No	Part No.	Description	Q'ty	S.No.	I/C	REMARKS	Weight (kgf)	Weight (lb)
010	66204-36170	JOINT FILTER	1				0.018	0.0396
020	66021-36060	CARTRIDGE OIL FILTER	1				0.39	0.858
030	6C200-39640	PIPE	1				0	0
040	04816-00120	O RING	2				0.001	0.0022
050	6A710-39670	STOPPER	2				0.02	0.044
060	01123-60816	BOLT	2				0.01	0.022

silverhorn.co.uk

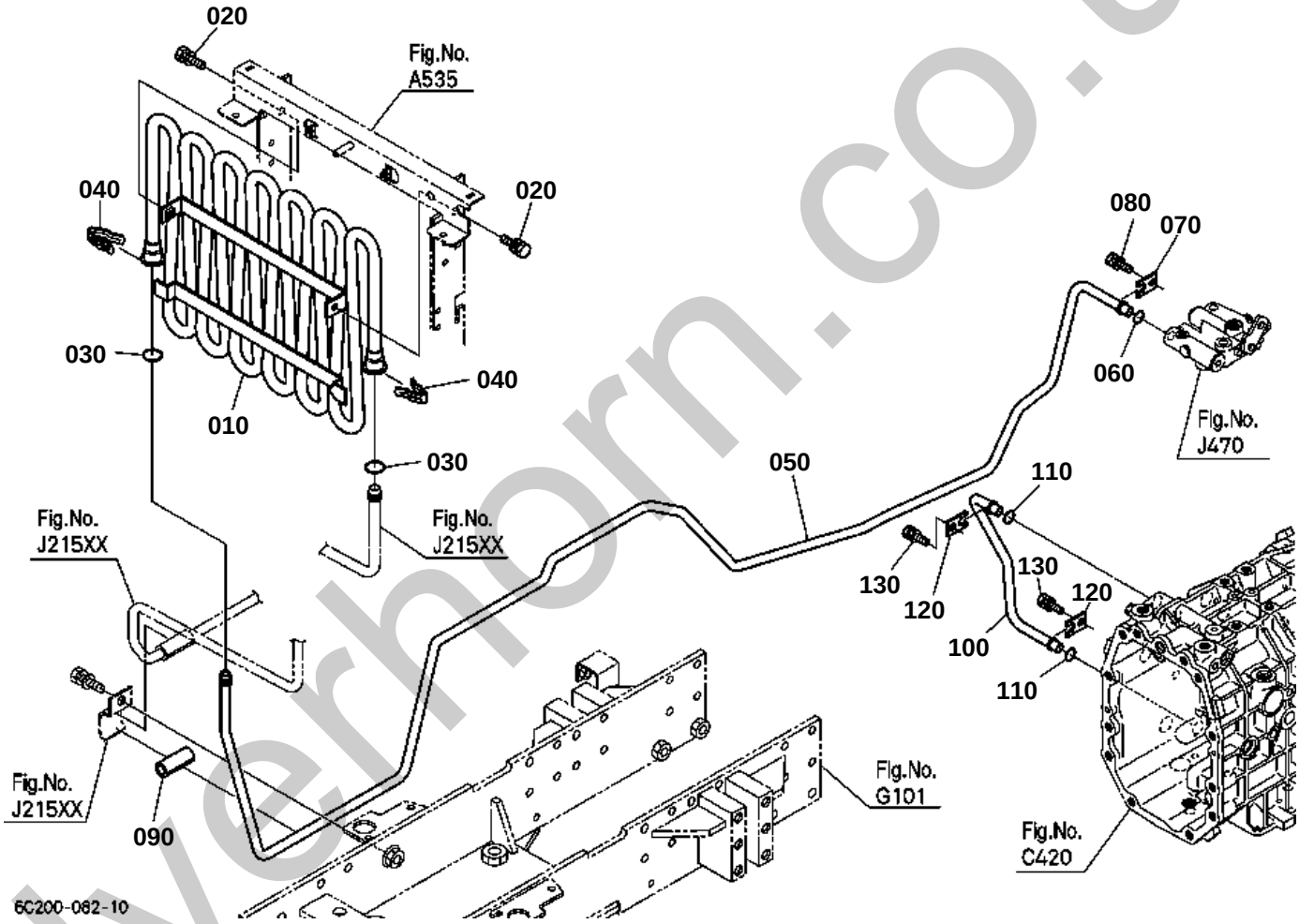

silverhorn.co.uk

HYDRAULIC OIL LINE (OIL COOLER)

↔ Interchangeable; ≠ not interchangeable; ← new for old; → old for new

REF.No	Part No.	Description	Q'ty	S.No.	I/C	REMARKS	Weight (kgf)	Weight (lb)
010	6A710-39610	PIPE OIL COOLER	1				1.7	3.74
020	01123-60816	BOLT	2				0.01	0.022
030	04816-00120	O RING	2				0.001	0.0022
040	6A710-39660	SUPRING PLATE	2				0.01	0.022
050	6C200-39622	PIPE	1				0	0
060	04816-00120	O RING	1				0.001	0.0022
070	6A710-39670	STOPPER	1				0.02	0.044
080	01123-60816	BOLT	1				0.01	0.022
090	6C140-39250	CUSHION	1				0.014	0.0308
100	6C200-39630	PIPE	1				0	0
110	04816-00120	O RING	2				0.001	0.0022
120	6A710-39670	STOPPER	2				0.02	0.044
130	01123-60816	BOLT	2				0.01	0.022

silverhorn.co.uk

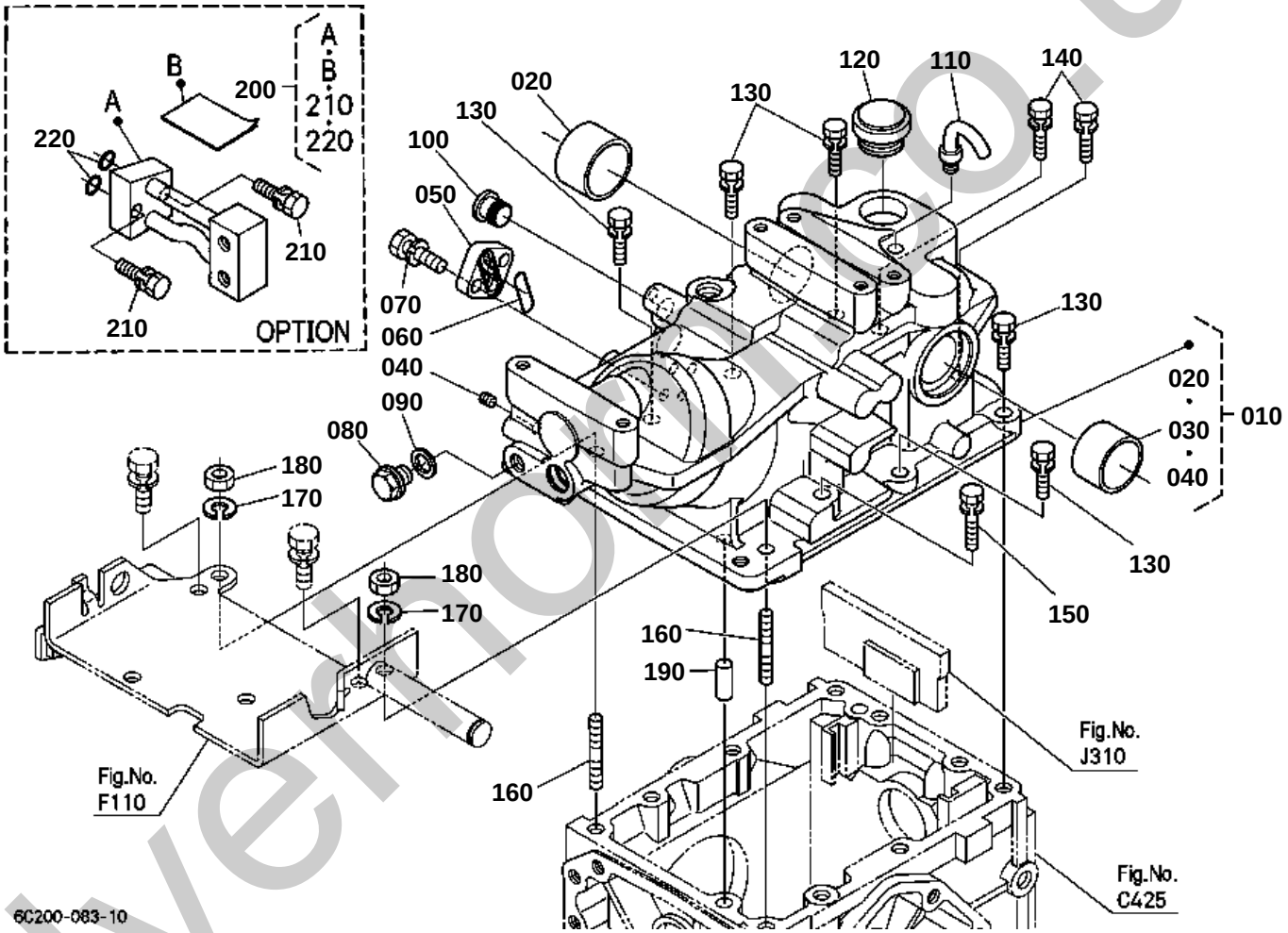

silverhoe.co.uk

↔ Interchangeable; ≠ not interchangeable; ← new for old; → old for new

REF.No	Part No.	Description	Q'ty	S.No.	I/C	REMARKS	Weight (kgf)	Weight (lb)
010	6C200-36034	ASSY CASE CYLINDER	1				0	0
020	6C040-36480	BUSH	1				0.02	0.044
030	6A671-36490	BUSH	1				0.04	0.088
040	32701-36150	PLUG	1				0.005	0.011
050	6C040-36620	CAP	1				0.022	0.0484
060	37410-36630	O RING	1				0.001	0.0022
070	01123-50820	BOLT	2				0.011	0.0242
080	37150-36730	PLUG	1				0.03	0.066
090	37150-36720	GASKET	1				0.01	0.022
100	TA040-36650	PLUG	1				0.005	0.011
110	6A100-36410	BREATHER	1				0.006	0.0132
120	6A100-36420	PLUG OIL FILLER	1				0.018	0.0396
130	01123-51035	BOLT	5				0.025	0.055
140	01123-51045	BOLT	2				0.032	0.0704
150	01123-51055	BOLT	1				0.038	0.0836
160	01555-51035	STUD	2				0.029	0.0638
170	04512-60100	WASHER SPRING	2				0.002	0.0044
180	02176-50100	NUT	2				0.005	0.011
190	05012-01025	PIN STRAIGHT	1				0.016	0.0352
200	6C040-95100	KIT COVER HYD.OUTLET	1			OPTION	0.455	1.001
210	01123-50830	BOLT	2			OPTION	0.015	0.033
220	04817-00070	O RING	2			OPTION	0.001	0.0022

silverhorn.co.uk

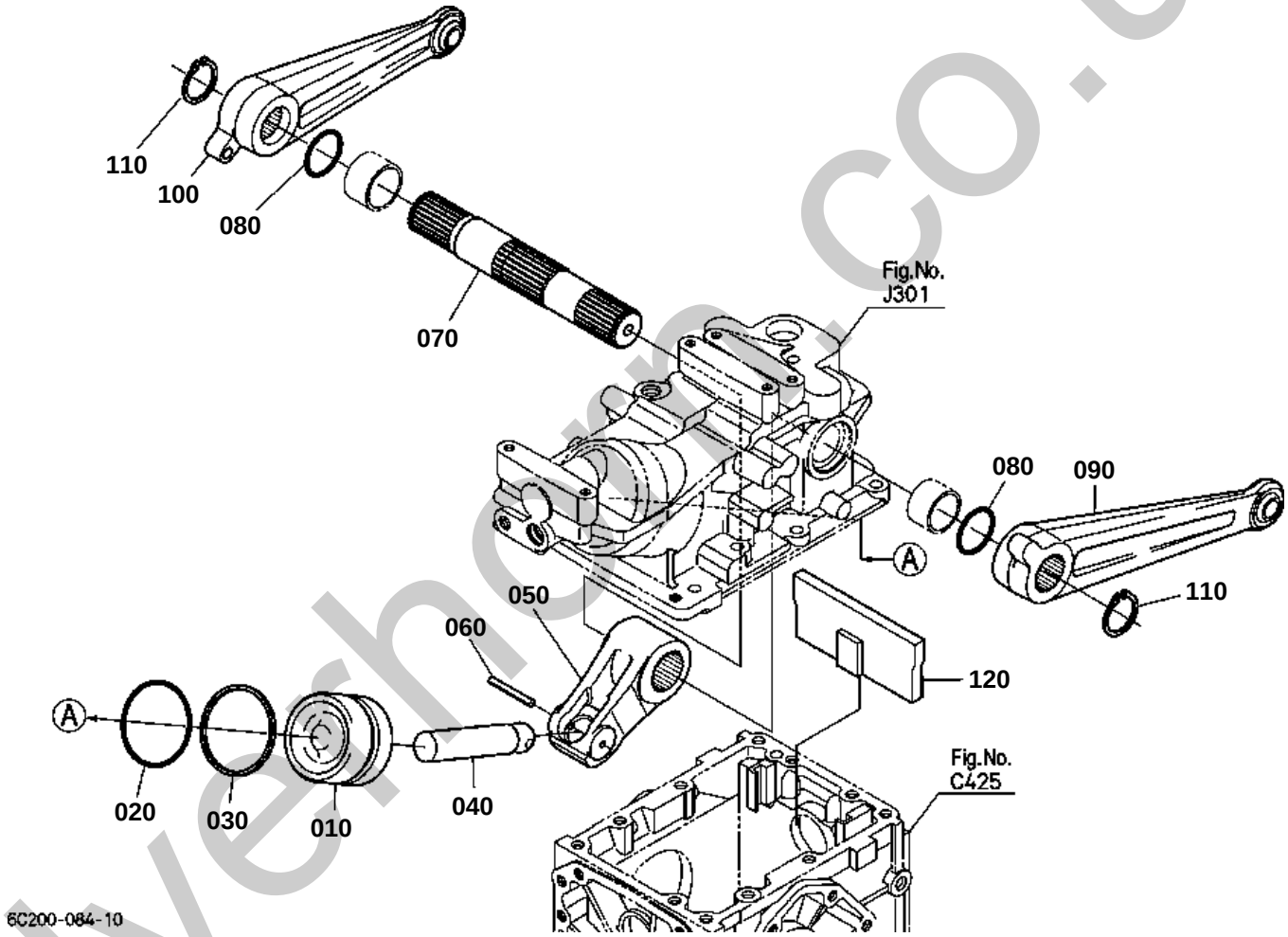

silversham.co.uk

HYDRAULIC PISTON/LIFT ARM

↔ Interchangeable; ≠ not interchangeable; ← new for old; → old for new

REF.No	Part No.	Description	Q'ty	S.No.	I/C	REMARKS	Weight (kgf)	Weight (lb)
010	31321-37310	PISTON HYD.	1				1.08	2.376
020	04811-00650	O RING	1				0.007	0.0154
030	6A671-36250	RING BACK UP	1				0	0
040	6A700-36430	ROD HYD.PISTON	1				0.48	1.056
050	6A700-36450	ARM HYDRAULIC	1				1.3	2.86
060	05411-00650	PIN SPRING	1				0.006	0.0132
070	6C200-36470	SHAFT HYD.ARM	1				0	0
080	37410-36340	O RING	2				0.005	0.011
090	6A700-36510	ARM LIFT LH	1				2.2	4.84
100	6A700-36520	ARM LIFT RH	1				2.2	4.84
110	04612-00350	CIR CLIP EXTERNAL	2				0.01	0.022
120	6C200-36750	STOPPER	1				0	0

silverhorn.co.uk

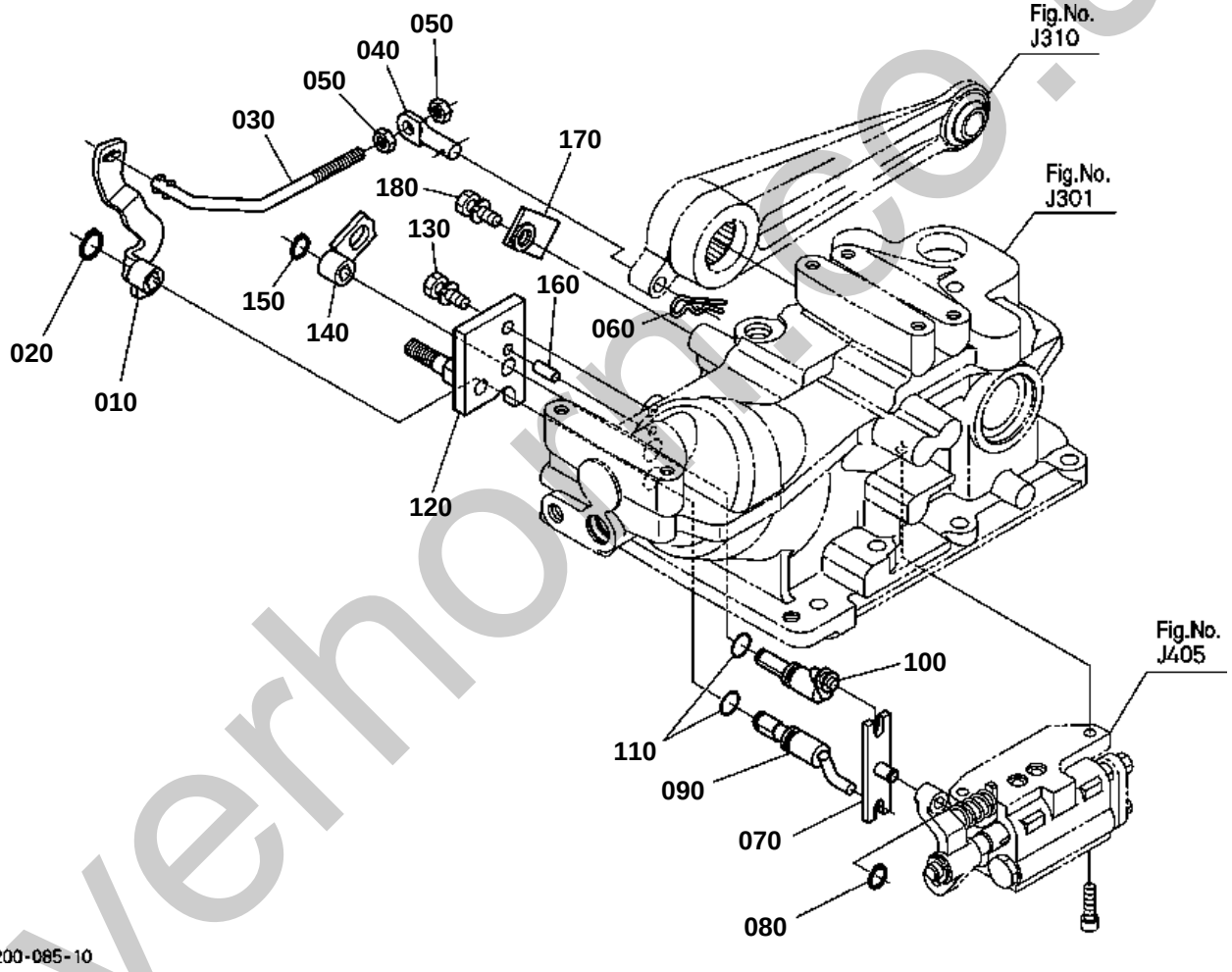

silverhoe.co.uk

FEED BACK LEVER

↔ Interchangeable; ≠ not interchangeable; ← new for old; → old for new

REF.No	Part No.	Description	Q'ty	S.No.	I/C	REMARKS	Weight (kgf)	Weight (lb)
010	6C200-36250	ARM FEED BACK	1				0	0
020	04612-00120	CIR CLIP EXTERNAL	1				0.001	0.0022
030	6C200-36230	ROD FEED BACK	1				0	0
040	6C040-36220	PIN FEED BACK	1				0.024	0.0528
050	02114-50080	NUT	2				0.005	0.011
060	05525-61000	PIN SNAP	1				0.002	0.0044
070	6C040-36940	LINK	1				0.05	0.11
080	04613-50060	CIR CLIP EXTERNAL	1				0.001	0.0022
090	6C200-36270	SHAFT FEED BACK	1				0	0
100	6C200-36290	SHAFT CONTROL LEVER	1				0	0
110	04816-00110	O RING	2				0.001	0.0022
120	6C200-36210	PLATE	1				0	0
130	01123-50820	BOLT	1				0.011	0.0242
140	6C200-36260	ARM CONTROL LEVER	1				0	0
150	04612-00100	CIR CLIP EXTERNAL	1				0.001	0.0022
160	05012-00614	PIN STRAIGHT	1				0.004	0.0088
170	6C200-36410	STOPPER	1				0	0
180	01123-50820	BOLT	1				0.011	0.0242

silverhorn.co.uk

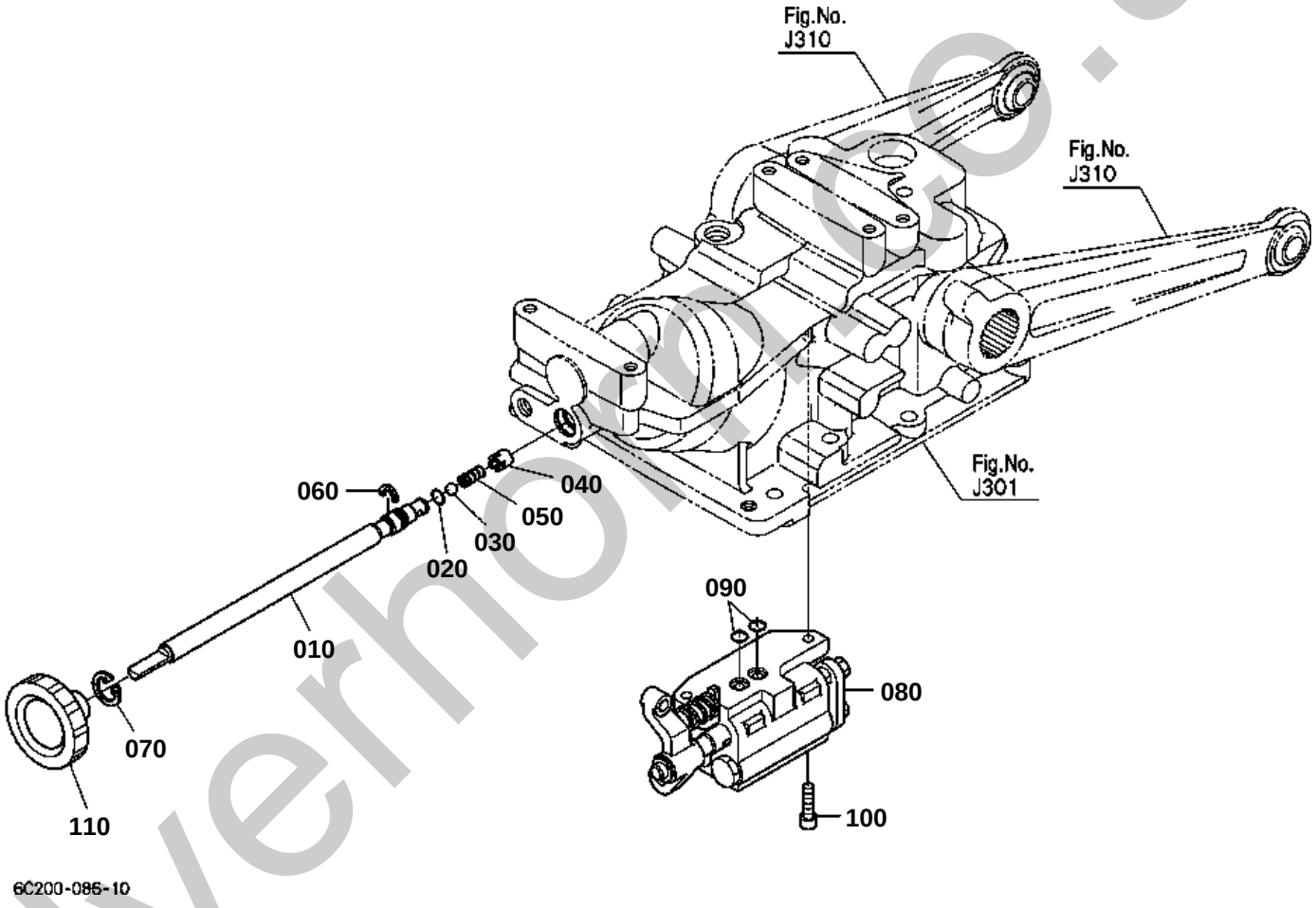

silverhomes.co.uk

CONTROL VALVE

↔ Interchangeable; ≠ not interchangeable; ← new for old; → old for new

REF.No	Part No.	Description	Q'ty	S.No.	I/C	REMARKS	Weight (kgf)	Weight (lb)
010	6A600-36280	SHAFT HYD.ADJUST	1				0.23	0.506
020	04817-00100	O RING	1				0.001	0.0022
030	07715-03209	BALL	1				0.002	0.0044
040	6A600-36270	COLLAR	1				0.002	0.0044
050	6A600-93650	SPRING	1				0.001	0.0022
060	6A320-37410	STOPPER	1				0.002	0.0044
070	04611-00190	CIR CLIP INTERNAL	1				0.001	0.0022
080	YR906-00106	ASSY VALVE CONTROL	1				1.53	3.366
090	04817-00100	O RING	2				0.001	0.0022
100	01311-10820	BOLT HEX-SOC-HD	2				0.012	0.0264
110	37410-36643	GRIP	1				0.03	0.066

silverhorn.co.uk

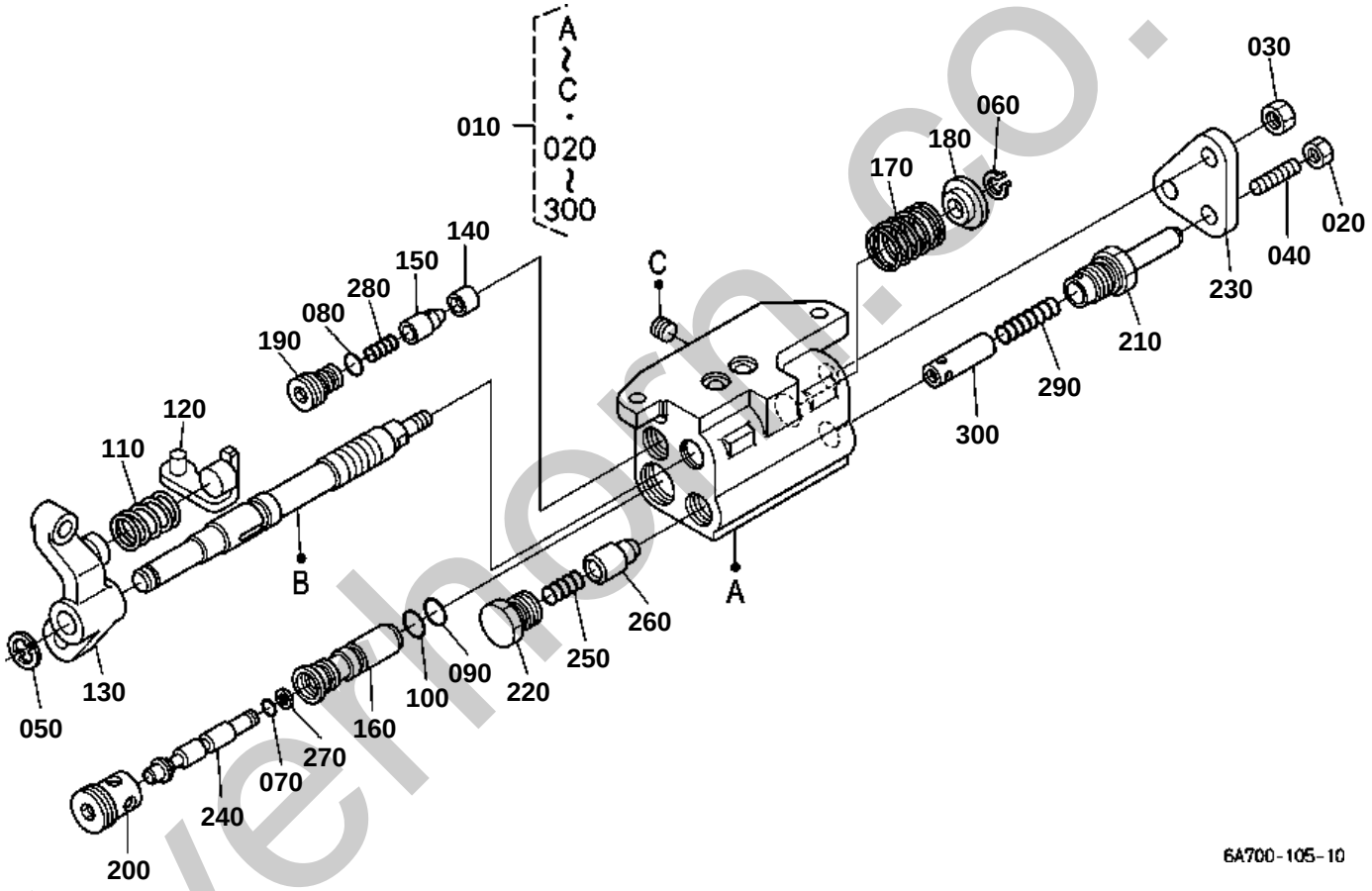

silverhorn.co.uk

↔ Interchangeable; ≠ not interchangeable; ← new for old; → old for new

REF.No	Part No.	Description	Q'ty	S.No.	I/C	REMARKS	Weight (kgf)	Weight (lb)
010	YR906-00106	ASSY VALVE CONTROL	1				1.53	3.366
020	02014-50060	NUT	1				0.002	0.0044
030	02114-50080	NUT	1				0.005	0.011
040	03650-50622	SCREW SET	1				0.004	0.0088
050	04613-50090	CIR CLIP EXTERNAL	1				0.001	0.0022
060	04613-50060	CIR CLIP EXTERNAL	1				0.001	0.0022
070	04816-00050	O RING	1				0.001	0.0022
080	04817-00090	O RING	1				0.001	0.0022
090	04817-05110	O RING	1				0.005	0.011
100	04817-05120	O RING	1				0.001	0.0022
110	6A600-93960	SPRING RETURN	1				0.013	0.0286
120	YR689-00310	HOLDER SPRING	1				0.025	0.055
130	YR689-00610	LEVER	1				0.04	0.088
140	YR730-20130	SEAT CHECK VALVE	1				0	0
150	YR730-20210	POPPET	1				0.01	0.022
160	YR730-20250	SLEEVE	1				0	0
170	YR730-20270	SPRING	1				0	0
180	YR730-20410	HOLDER SPRING	1				0.006	0.0132
190	YR906-00310	PLUG	1				0.015	0.033
200	YR906-00410	PLUG	1				0.03	0.066
210	YR906-00510	PLUG	1				0.035	0.077
220	YR906-00610	PLUG UNLOAD	1				0.022	0.0484
230	YR906-00710	PLATE	1				0.05	0.11
240	YR906-20260	POPET	1				0.02	0.044
250	YT104-00750	SPRING	1				0.001	0.0022
260	YT161-22250	POPPET	1				0	0
270	YT161-22280	RING BACK UP	1				0.001	0.0022
280	YT509-00140	SPRING	1				0.002	0.0044
290	YT527-20180	SPRING	1				0.002	0.0044
300	YT593-00210	POPPET	1				0.005	0.011

silverhorn.co.uk

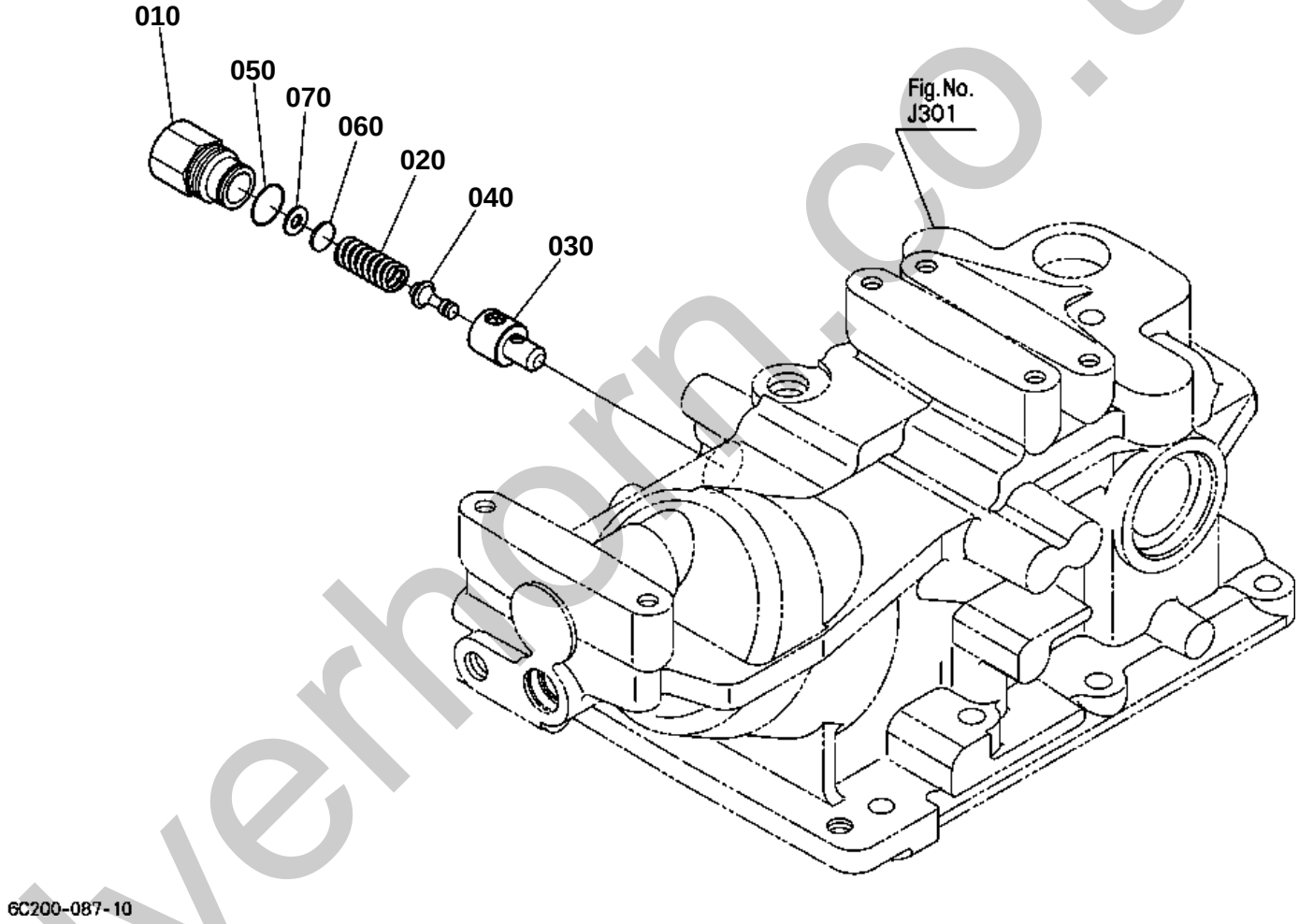

silverhorn.co.uk

↔ Interchangeable; ≠ not interchangeable; ← new for old; → old for new

REF.No	Part No.	Description	Q'ty	S.No.	I/C	REMARKS	Weight (kgf)	Weight (lb)
010	6A600-36340	PLUG	1				0.07	0.154
020	31351-37920	SPRING RELIEF	1				0.02	0.044
030	31351-37930	SEAT RELIEF VALVE	1				0.02	0.044
040	31351-37940	POPPET	1				0.005	0.011
050	04811-10160	O RING	1				0.001	0.0022
060	31351-37950	SHIM	1			0.4mm	0.001	0.0022
060	31351-37960	SHIM	1			0.2mm	0.001	0.0022
060	31351-37970	SHIM	1			0.1mm	0.001	0.0022
070	04013-60050	WASHER PLAIN	1				0.001	0.0022

silverhorn.co.uk

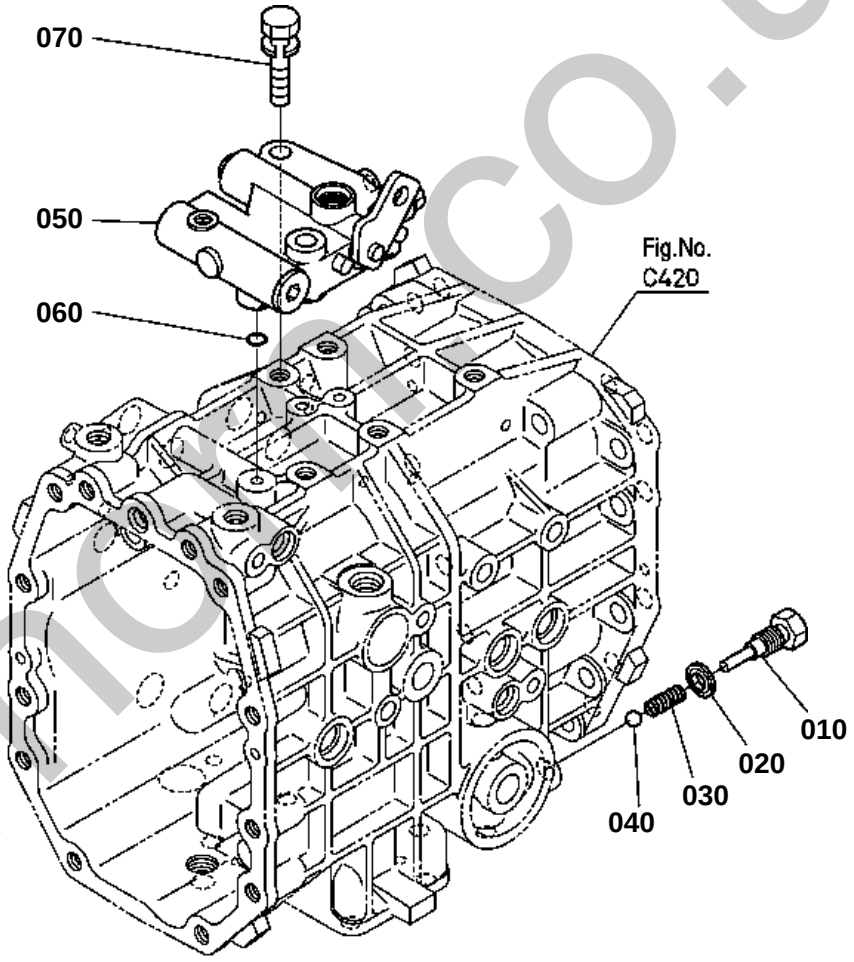

6C200-089-10

silverhill-co.uk

PTO VALVE

↔ Interchangeable; ≠ not interchangeable; ← new for old; → old for new

REF.No	Part No.	Description	Q'ty	S.No.	I/C	REMARKS	Weight (kgf)	Weight (lb)
010	6C050-39382	BOLT	1				0.03	0.066
020	04717-01200	WASHER WITH RUBBER	1				0.002	0.0044
030	16851-36950	SPRING	1				0.02	0.044
040	07715-00803	BALL	1				0.004	0.0088
050	6C200-11200	ASSY VALVE PTO	1				0	0
060	04817-00100	O RING	3				0.001	0.0022
070	01123-51045	BOLT	3				0.032	0.0704

silverhorn.co.uk

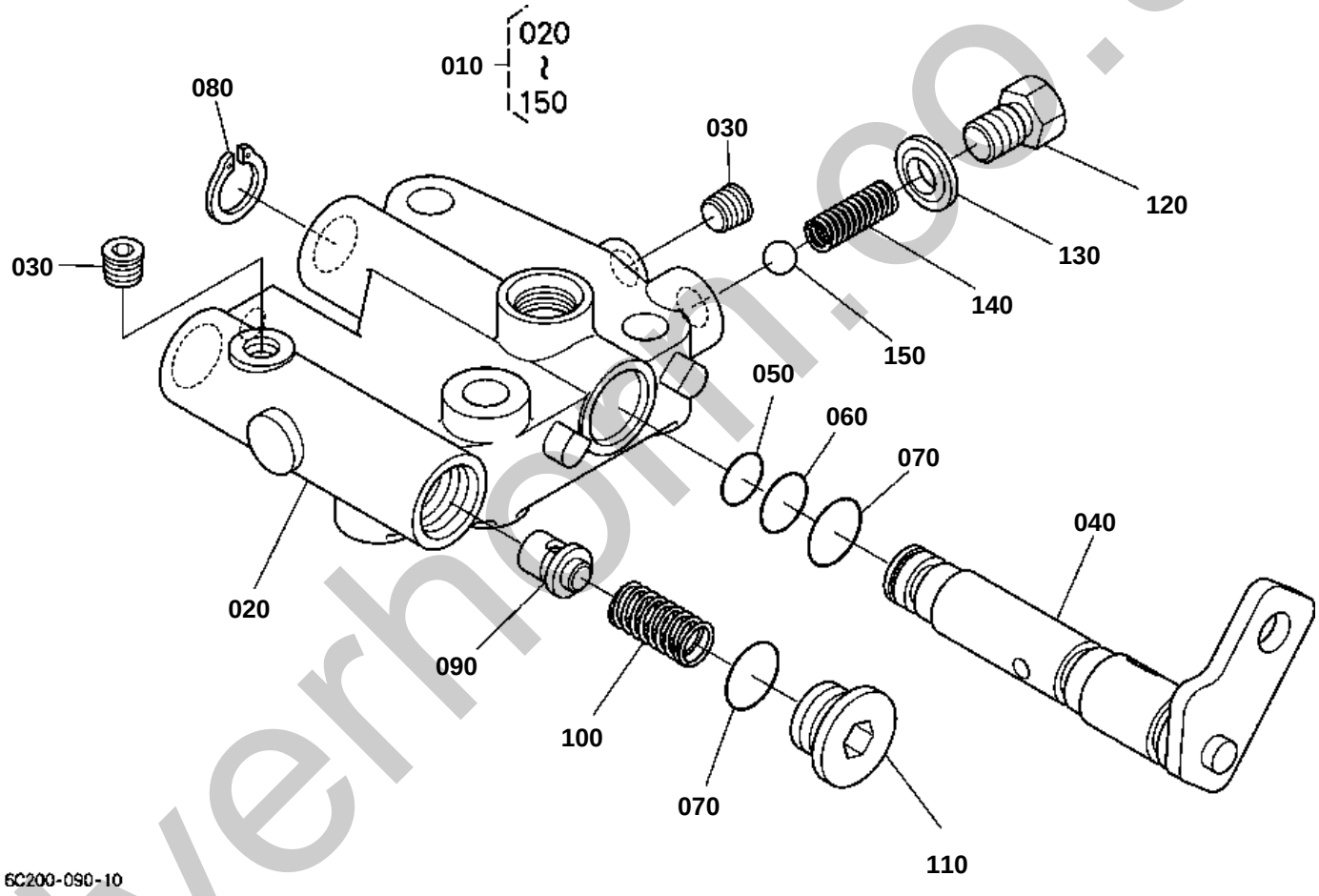

silverhorn.co.uk

PTO VALVE [COMPONENT PARTS]

↔ Interchangeable; ≠ not interchangeable; ← new for old; → old for new

REF.No	Part No.	Description	Q'ty	S.No.	I/C	REMARKS	Weight (kgf)	Weight (lb)
010	6C200-11200	ASSY VALVE PTO	1				0	0
020	6C200-11120	BODY VALVE PTO	1				0	0
030	31351-37160	PLUG	2				0.003	0.0066
040	6C200-11130	ARM PTO	1				0	0
050	04816-06100	O RING	1				0.001	0.0022
060	04816-00120	O RING	1				0.001	0.0022
070	04816-00140	O RING	2				0.002	0.0044
080	04612-00140	CIR CLIP EXTERNAL	1				0.001	0.0022
090	66363-39710	POPPET L	1				0.006	0.0132
100	66363-39720	SPRING	1				0.01	0.022
110	5H600-12620	PLUG	1				0.021	0.0462
120	6C040-19222	BOLT	1				0.015	0.033
130	04717-01000	WASHER WITH RUBBER	1				0.001	0.0022
140	62061-18260	SPRING STOPPER	1				0.002	0.0044
150	07715-01605	BALL	1				0.003	0.0066

silverhorn.co.uk

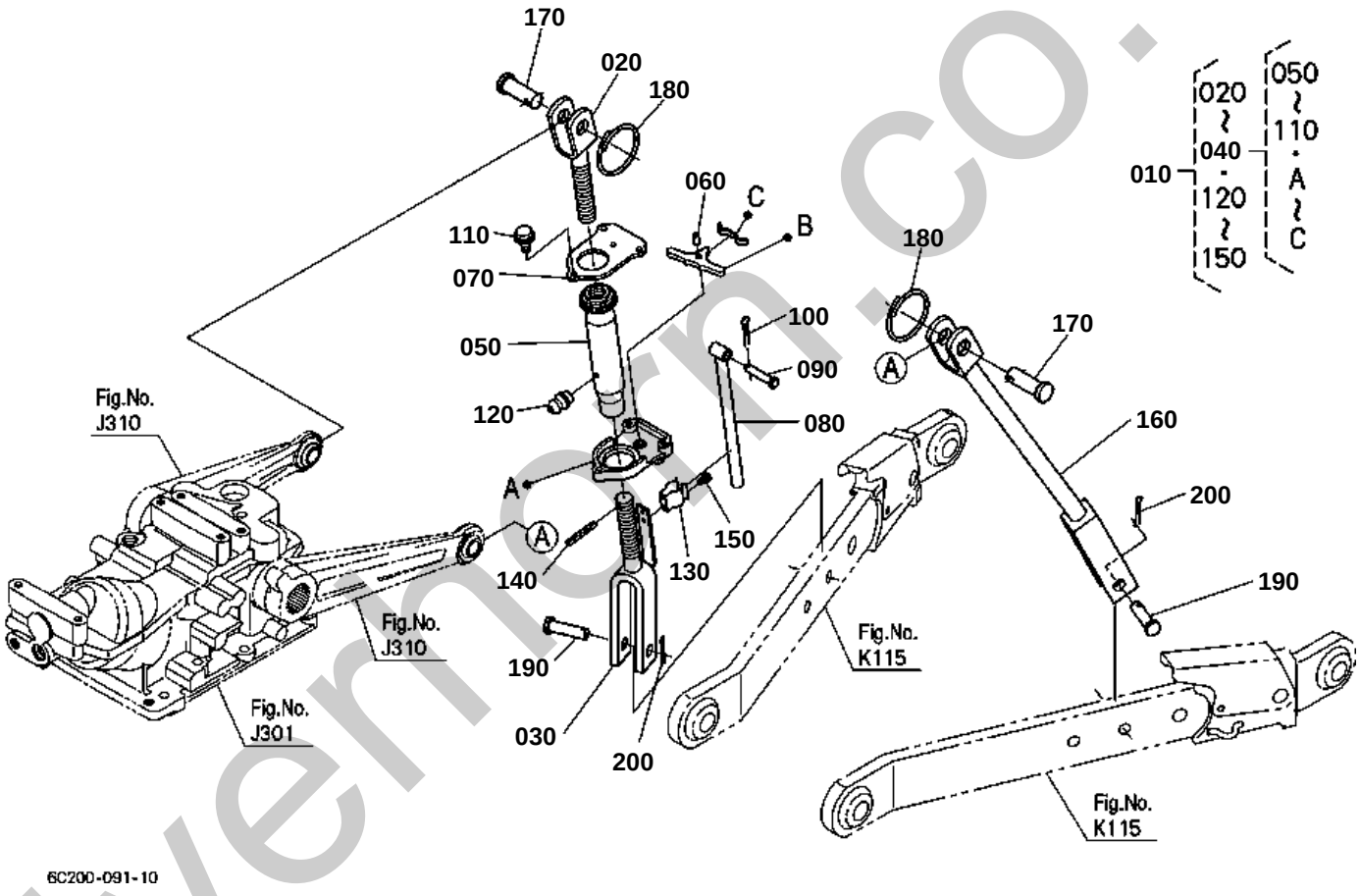

silvermorn.co.uk

3-POINT LINKAGE 2(LIFT ROD)

↔ Interchangeable; ≠ not interchangeable; ← new for old; → old for new

REF.No	Part No.	Description	Q'ty	S.No.	I/C	REMARKS	Weight (kgf)	Weight (lb)
010	6C170-65200	ASSY ROD LIFT RH	1				2.06	4.532
020	6C170-65230	ROD LIFT UPPER RH	1				0.36	0.792
030	6C170-65240	ROD LIFT LOWER RH	1				0.72	1.584
040	6C170-65300	ASSY ROD LIFT	1				0.96	2.112
050	6C170-65380	COMP.TURNBUCKLE	1				0.5	1.1
060	6C170-65350	PIN FULCRUM	1				0.003	0.0066
070	6C170-65322	COVER LIFT ROD	1				0.12	0.264
080	6C170-65360	LEVER LIFT ROD	1				0.195	0.429
090	05122-50840	PIN JOINT	1				0.017	0.0374
100	05511-50215	PIN SPLIT	1				0.001	0.0022
110	01023-50614	BOLT	3				0.005	0.011
120	67211-42940	NIPPLE GREASE	1				0.001	0.0022
130	3G700-83542	SRING HOLDER	1				0.01	0.022
140	05411-00320	PIN SPRING	1				0.001	0.0022
150	03024-50408	SCREW WITH WASHER	2				0.002	0.0044
160	6C070-65270	ROD LIFT LH	1				1.33	2.926
170	05122-51645	PIN JOINT	2				0.075	0.165
180	67156-34340	RING SNAP	2				0.01	0.022
190	05122-51250	PIN JOINT	2				0.05	0.11
200	05511-50430	PIN SPLIT	2				0.004	0.0088

silverhorn.co.uk

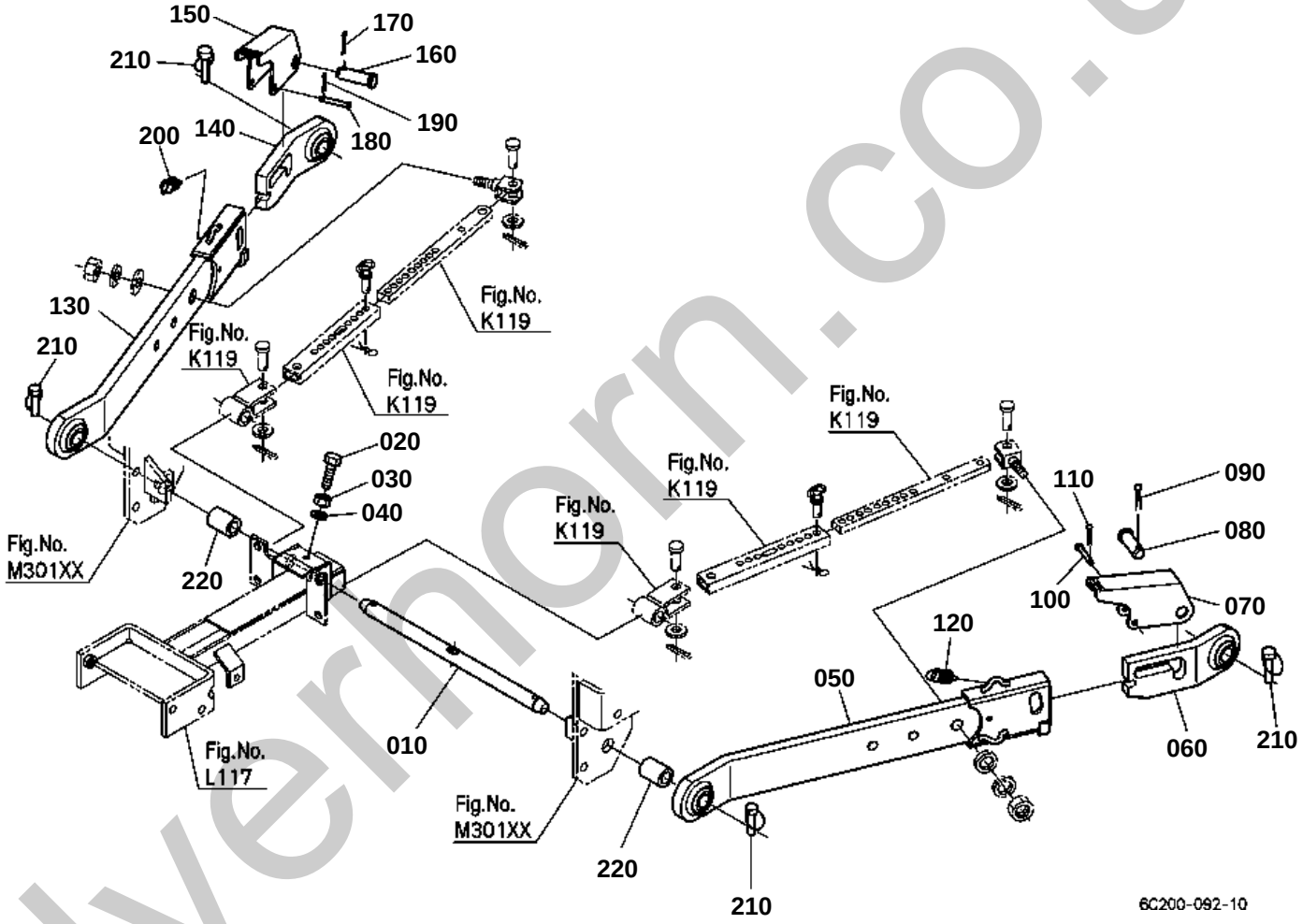

silverhorn.co.uk

↔ Interchangeable; ≠ not interchangeable; ← new for old; → old for new

REF.No	Part No.	Description	Q'ty	S.No.	I/C	REMARKS	Weight (kgf)	Weight (lb)
010	6C040-66010	PIN LOWER LINK	1				1.14	2.508
020	6C040-65120	BOLT	1				0.02	0.044
030	02118-50100	NUT	1				0.005	0.011
040	04512-60100	WASHER SPRING	1				0.002	0.0044
050	6C170-65410	COMP.LINK LOWER LH	1				4.7	10.34
060	6C170-65424	COMP.LINK LOWER LH	1				1.3	2.86
070	6C170-65430	LEVER	1				0.23	0.506
080	6C170-65450	PIN	1				0.08	0.176
090	05511-50530	PIN SPLIT	1				0.006	0.0132
100	05122-50640	PIN JOINT	1				0.01	0.022
110	05511-51615	PIN SPLIT	1				0.001	0.0022
120	6C170-65440	SPRING	1				0.013	0.0286
130	6C170-65510	COMP.LINK LOWER RH	1				4.7	10.34
140	6C170-65524	COMP.LINK LOWER RH	1				1.3	2.86
150	6C170-65430	LEVER	1				0.23	0.506
160	6C170-65450	PIN	1				0.08	0.176
170	05511-50530	PIN SPLIT	1				0.006	0.0132
180	05122-50640	PIN JOINT	1				0.01	0.022
190	05511-51615	PIN SPLIT	1				0.001	0.0022
200	6C170-65440	SPRING	1				0.013	0.0286
210	34150-37640	PIN SET	4				0.06	0.132
220	66204-65350	SPACER	2				0.12	0.264

silverhorn.co.uk

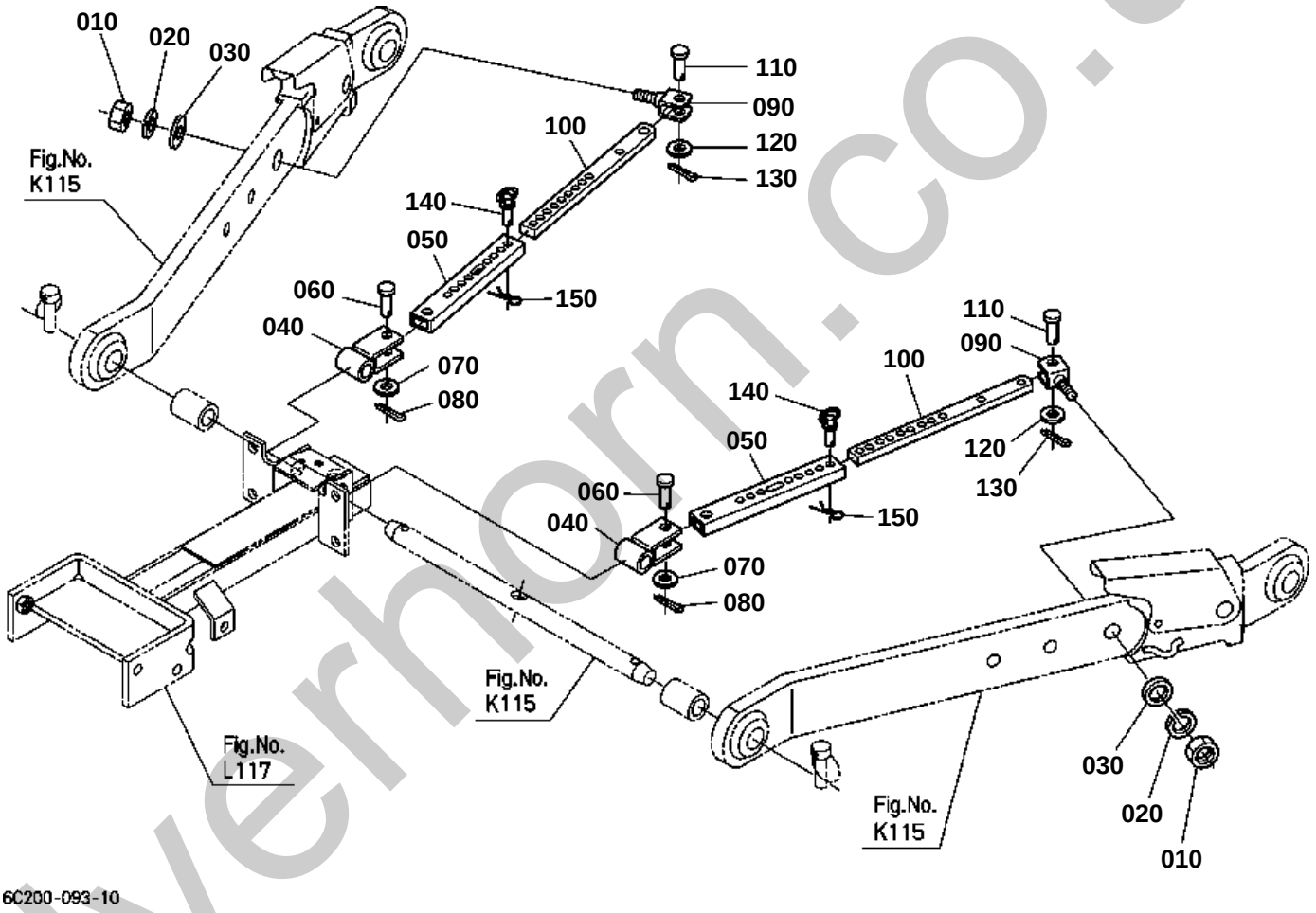

silverhorn.co.uk

↔ Interchangeable; ≠ not interchangeable; ← new for old; → old for new

REF.No	Part No.	Description	Q'ty	S.No.	I/C	REMARKS	Weight (kgf)	Weight (lb)
010	02174-50160	NUT	2				0.022	0.0484
020	04512-60160	WASHER SPRING	2				0.01	0.022
030	04015-60160	WASHER PLAIN	2				0.058	0.1276
040	6C070-65310	BRACKET STABILIZER	2				0.5	1.1
050	6C070-65320	PIPE STABILIZER	2				0.8	1.76
060	05122-61245	PIN JOINT	2				0.045	0.099
070	04011-50120	WASHER PLAIN	2				0.005	0.011
080	05511-50425	PIN SPLIT	2				0.003	0.0066
090	6C070-65350	BOLT STABILIZER	2				0.25	0.55
100	6C070-65333	PLATE STABILIZER	2				0.68	1.496
110	05122-51235	PIN JOINT	2				0.034	0.0748
120	04011-50120	WASHER PLAIN	2				0.005	0.011
130	05511-50425	PIN SPLIT	2				0.003	0.0066
140	6C070-65340	PIN STABILIZER	2				0.03	0.066
150	05515-61000	PIN SNAP	2				0.002	0.0044

silverhorn.co.uk

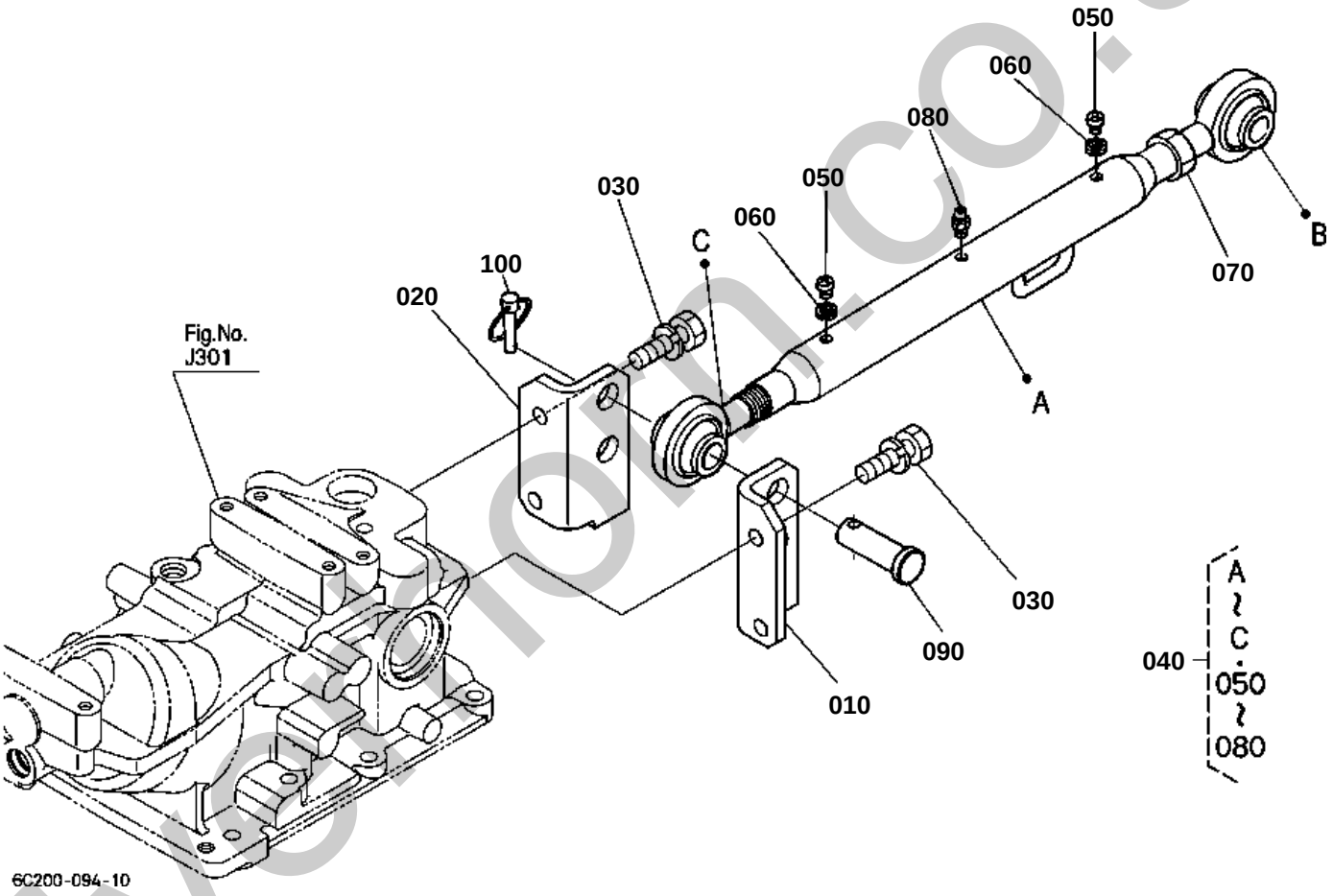

silverfrom.co.uk

3-POINT LINKAGE 1(TOP LINK)

↔ Interchangeable; ≠ not interchangeable; ← new for old; → old for new

REF.No	Part No.	Description	Q'ty	S.No.	I/C	REMARKS	Weight (kgf)	Weight (lb)
010	6C200-65190	BRACKET TOP LINK LH	1				0	0
020	6C200-65160	BRACKET TOP LINK RH	1				0	0
030	01123-51230	BOLT	4				0.04	0.088
040	6C070-65400	ASSY LINK TOP	1				2.12	4.664
050	03014-50606	SCREW PAN-HEAD	2				0.027	0.0594
060	04512-60060	WASHER SPRING	2				0.001	0.0022
070	02152-50200	NUT	1				0.032	0.0704
080	06613-10675	NIPPLE GREASE	1				0.003	0.0066
090	31150-71360	PIN JOINT	2				0.166	0.3652
100	34150-37640	PIN SET	2				0.06	0.132

silverhorn.co.uk

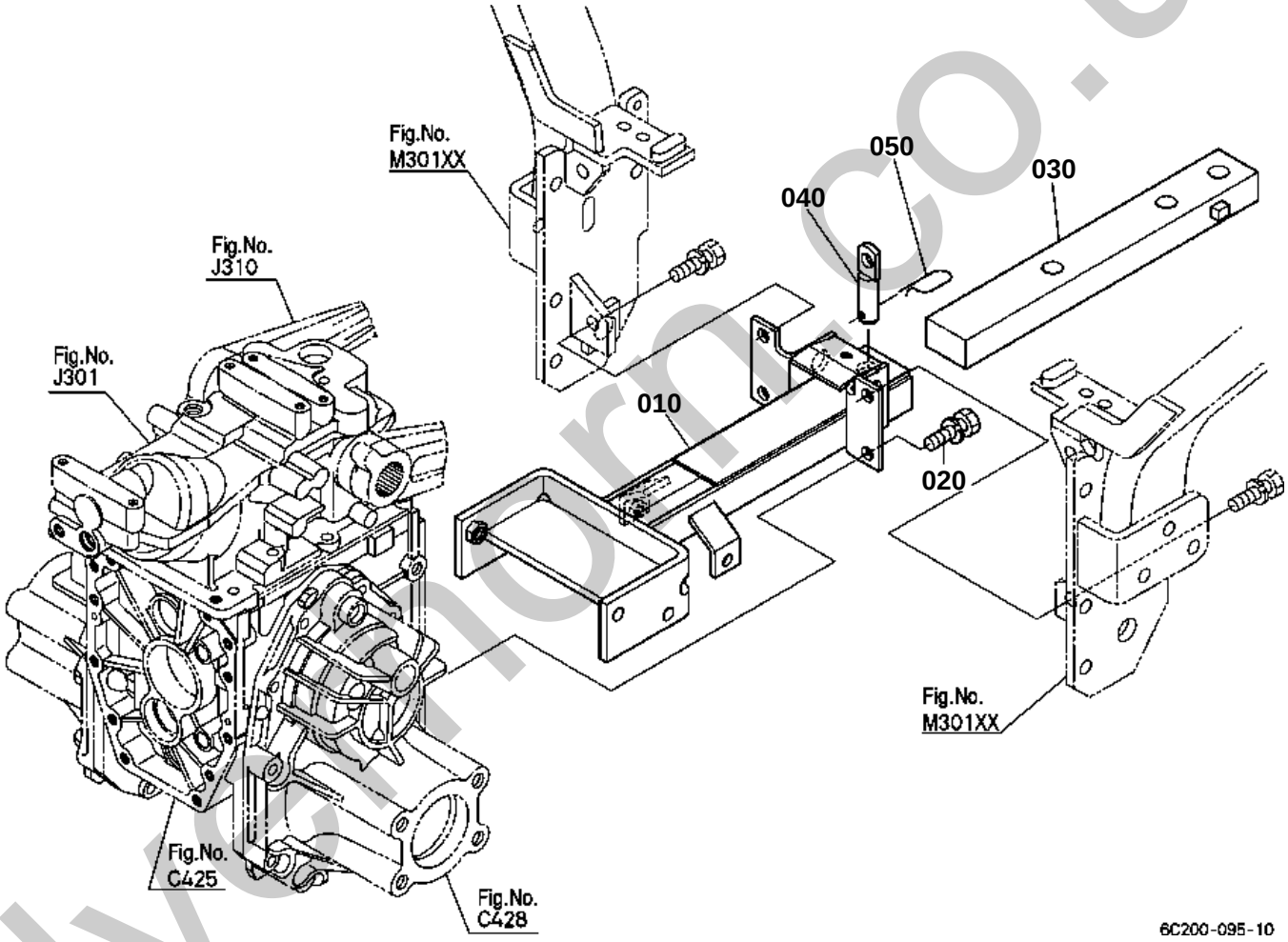

silvermorn.co.uk

↔ Interchangeable; ≠ not interchangeable; ← new for old; → old for new

REF.No	Part No.	Description	Q'ty	S.No.	I/C	REMARKS	Weight (kgf)	Weight (lb)
010	6C200-65600	COMP.HITCH	1				6.04	13.288
020	01123-51230	BOLT	2				0.04	0.088
030	6C040-67110	DRAWBAR	1				4.56	10.032
040	6C040-65610	PIN HITCH	1				0.18	0.396
050	31150-29730	PIN SPRING	1				0.044	0.0968

silverhorn.co.uk

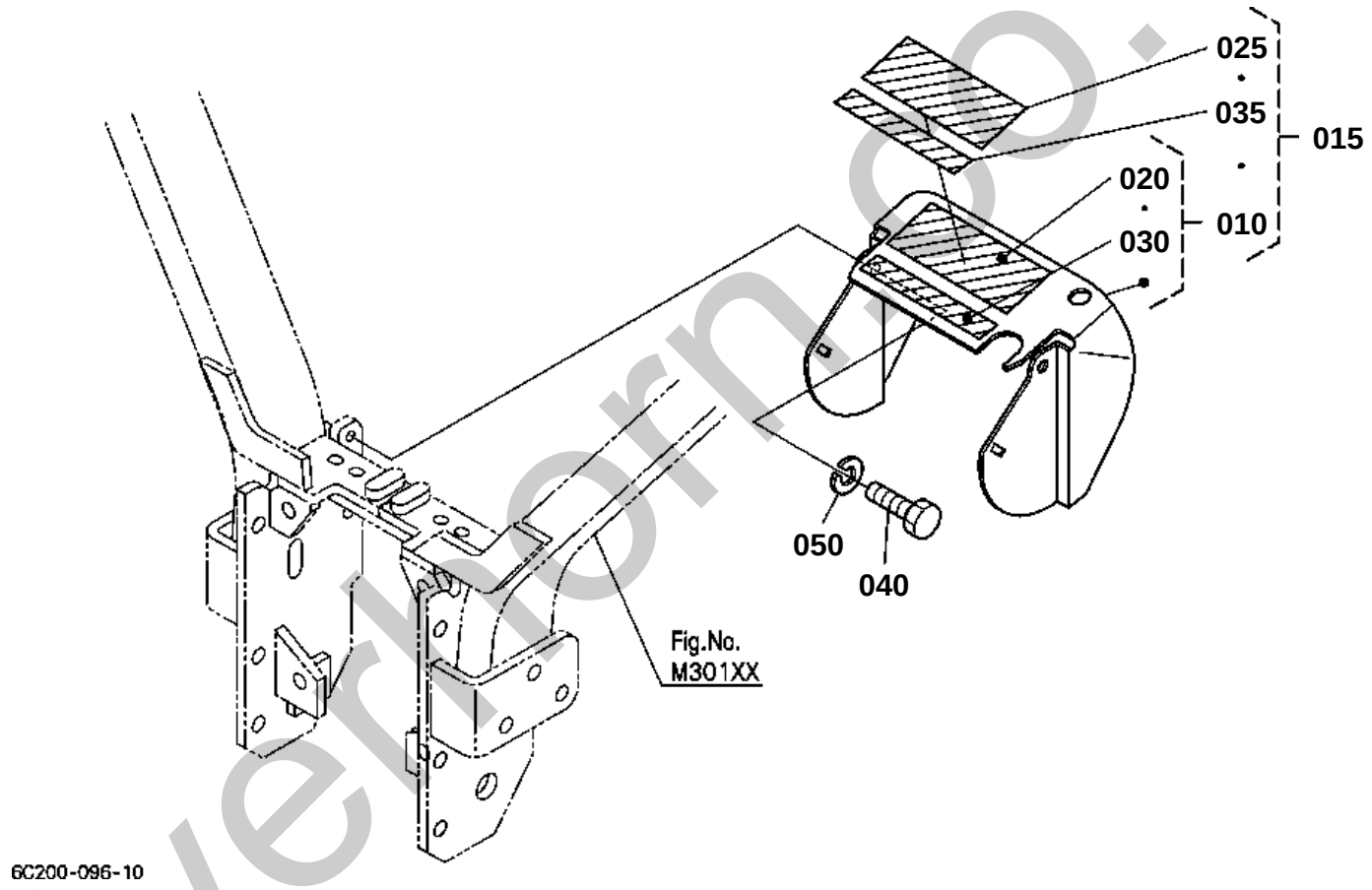

silverhorn.co.uk

↔ Interchangeable; ≠ not interchangeable; ← new for old; → old for new

REF.No	Part No.	Description	Q'ty	S.No.	I/C	REMARKS	Weight (kgf)	Weight (lb)
010	6C200-72100	KIT COVER PTO (A)	1			ENGLISH	0	0
015	6C200-72000	KIT COVER PTO (B)	1			FRENCH	0	0
020	TA040-49593	LABEL PTO WARNING	1			ENGLISH	0.001	0.0022
025	TA041-49590	LABEL PTO WARNING	1			FRENCH	0.001	0.0022
030	6C140-47440	LABEL DRAWBAR	1			ENGLISH	0.001	0.0022
035	6C141-47440	LABEL DRAWBAR	1			FRENCH	0.001	0.0022
040	01153-50820	BOLT	2				0.012	0.0264
050	04512-60080	WASHER SPRING	2				0.002	0.0044

silverhorn.co.uk

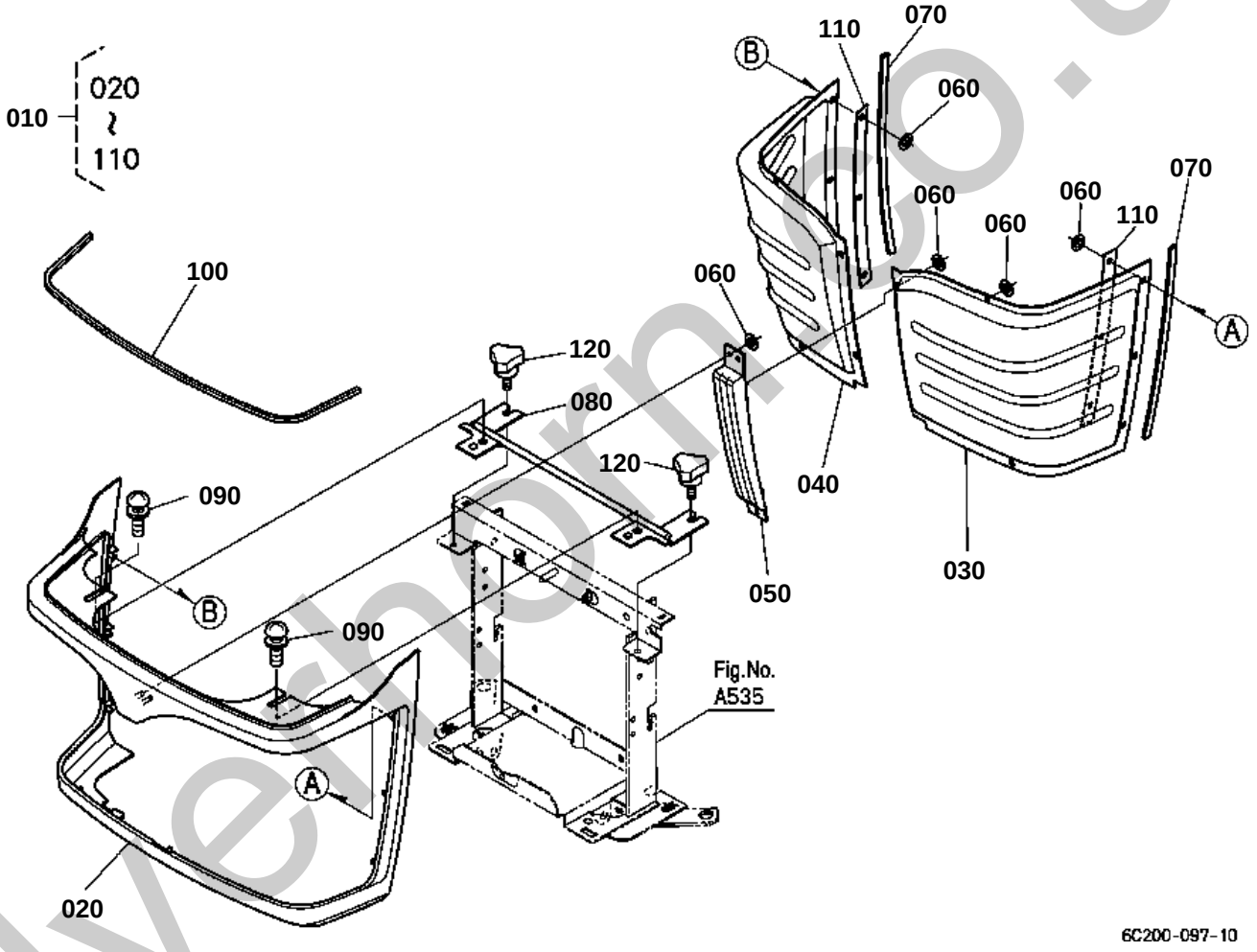

silverhorn.co.uk

FRONT GRILLE

↔ Interchangeable; ≠ not interchangeable; ← new for old; → old for new

REF.No	Part No.	Description	Q'ty	S.No.	I/C	REMARKS	Weight (kgf)	Weight (lb)
010	6C200-54400	COMP.COVER FRONT	1				0	0
020	6C200-54410	COVER FRONT	1				0	0
030	6C200-54420	NET FRONT SKIRT LH	1				0	0
040	6C200-54430	NET FRONT SKIRT RH	1				0	0
050	6C200-54440	STAY NET	1				0	0
060	52300-26250	NUT	17				0.001	0.0022
070	6C200-54490	CUSHION	2				0	0
080	6C200-54500	STAY	1				0	0
090	03017-50816	SCREW CR-REC-BD-HD	2				0.01	0.022
100	6C200-54142	SPONGE	1				0	0
110	6C200-54520	PLATE	2				0	0
120	37410-52610	SCREW KNOB	2				0.015	0.033

silverhorn.co.uk

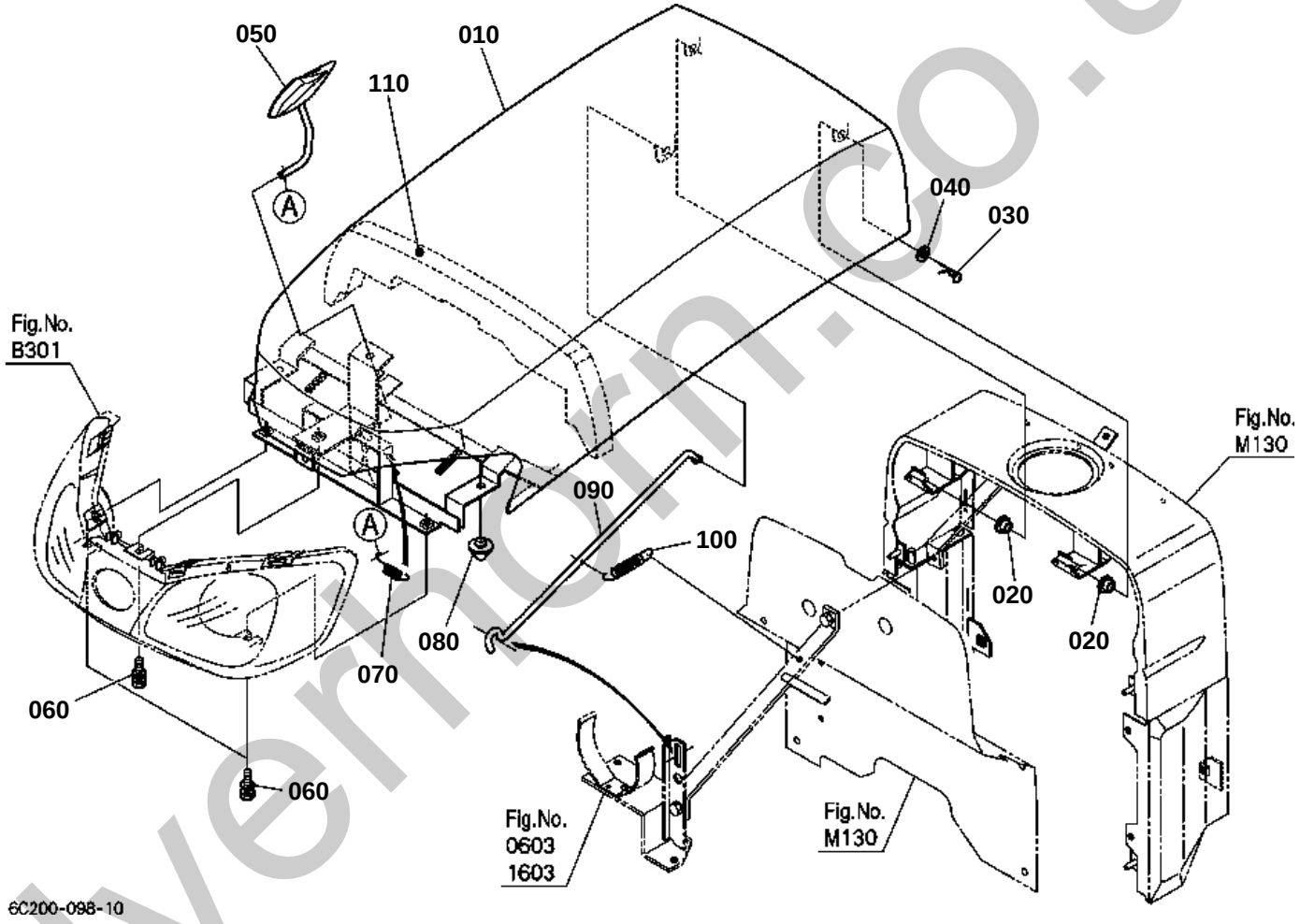

silvernorn.co.uk

BONNET

↔ Interchangeable; ≠ not interchangeable; ← new for old; → old for new

REF.No	Part No.	Description	Q'ty	S.No.	I/C	REMARKS	Weight (kgf)	Weight (lb)
010	6C200-54100	COMP.BONNET	1				0	0
020	6A100-54190	BUSH	2				0.001	0.0022
030	05515-60800	PIN SNAP	1				0.002	0.0044
040	04013-60080	WASHER PLAIN	1				0.002	0.0044
050	6A700-54122	COMP.HANDLE MASCOT	1				0	0
060	01125-60820	BOLT	3				0.015	0.033
070	6C040-54150	SPRING	1				0.006	0.0132
080	6C090-54162	CUSHION	2				0.013	0.0286
090	6C200-54510	ROD BONNET	1				0	0
100	56811-31430	SPRING	1				0.018	0.0396
110	6C200-54460	TAPE BONNET	1				0	0

silverhorn.co.uk

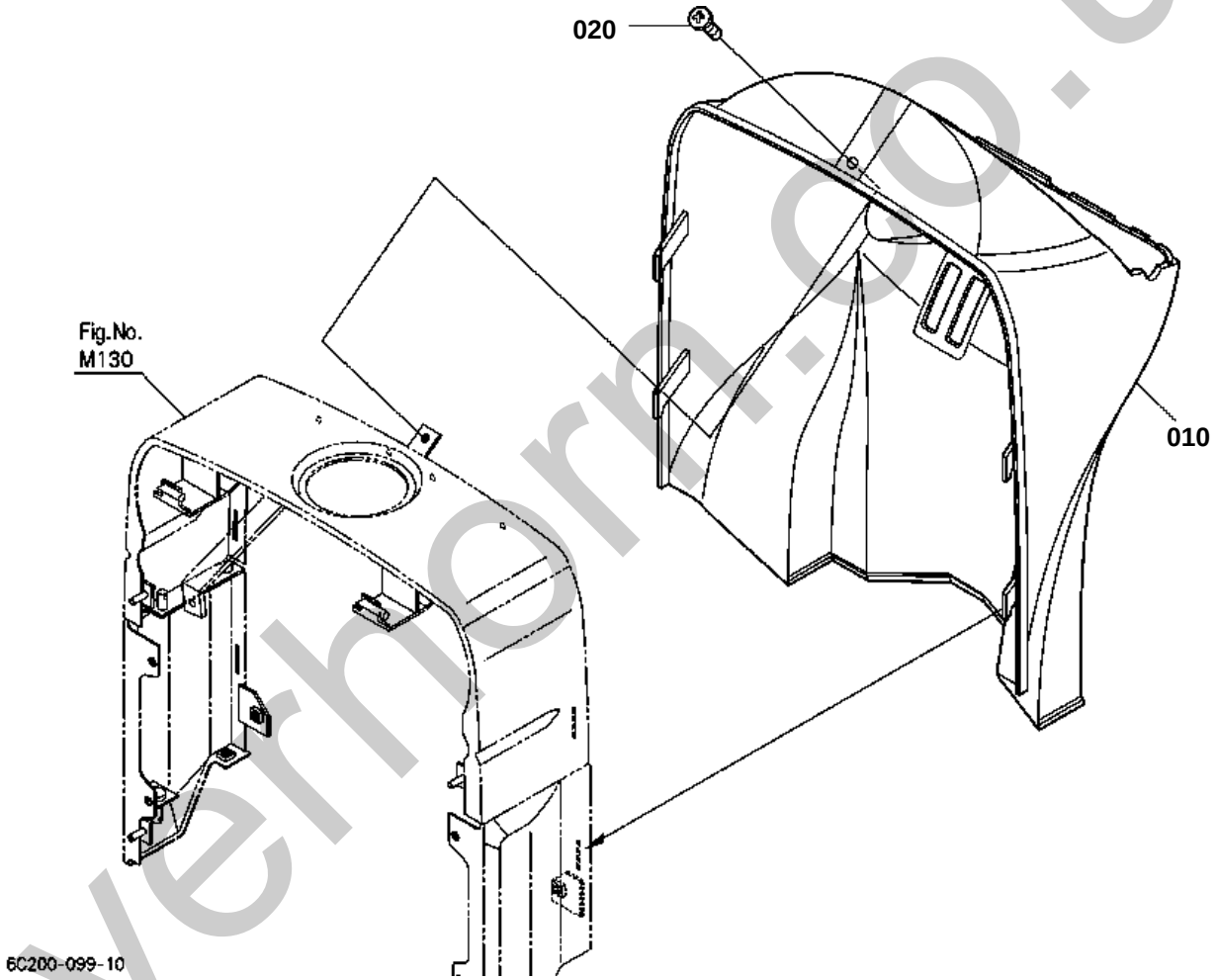

silverhorn.co.uk

PANEL COVER

↔ Interchangeable; ≠ not interchangeable; ← new for old; → old for new

REF.No	Part No.	Description	Q'ty	S.No.	I/C	REMARKS	Weight (kgf)	Weight (lb)
010	6C200-53510	COVER LOWER PANEL	1				0	0
020	37410-61720	SCREW	1				0.001	0.0022

silverhorn.co.uk

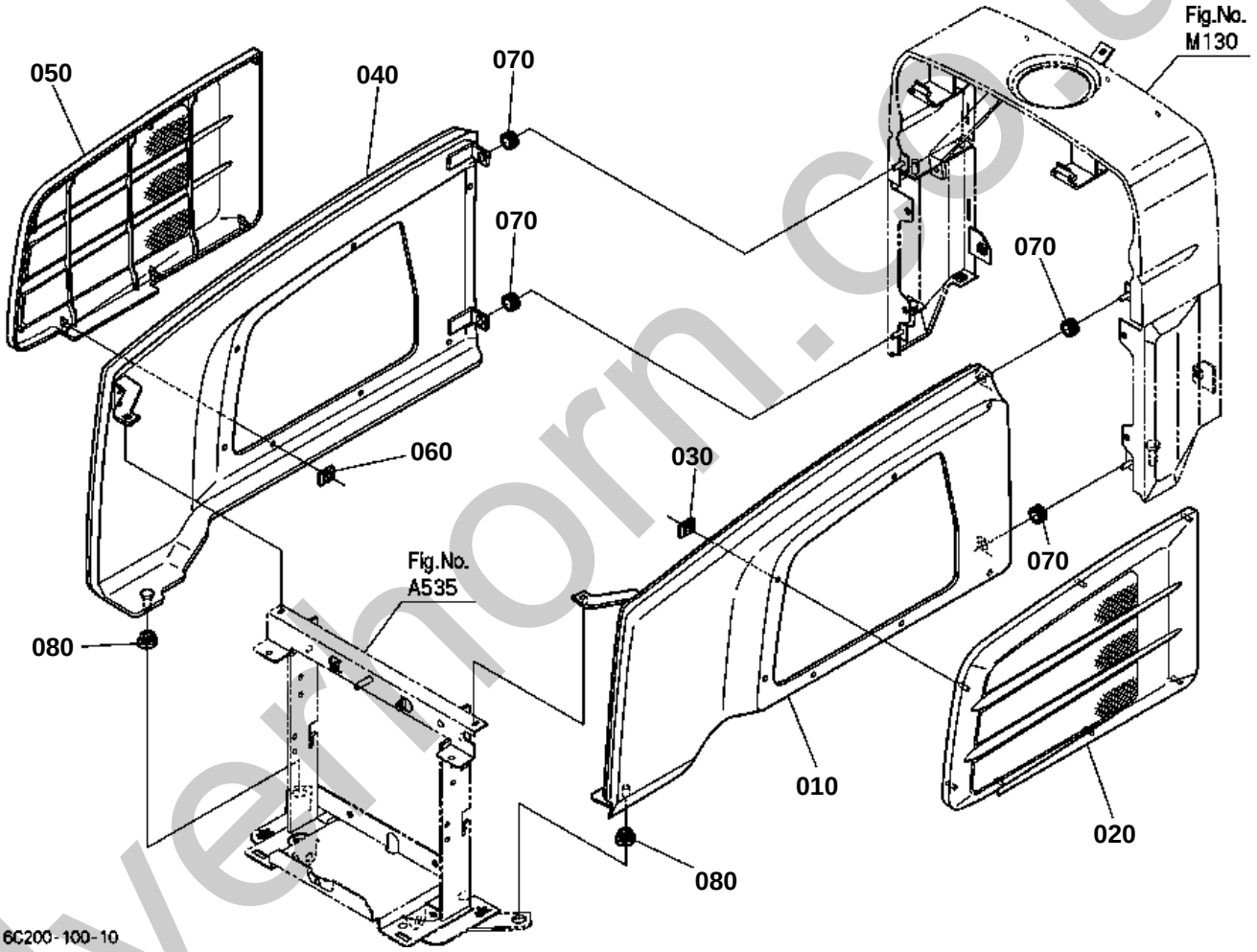

silverthorn.co.uk

SIDE COVER

↔ Interchangeable; ≠ not interchangeable; ← new for old; → old for new

REF.No	Part No.	Description	Q'ty	S.No.	I/C	REMARKS	Weight (kgf)	Weight (lb)
010	6A700-54323	COMP.COVER SIDE	1				1.74	3.828
020	6A700-54334	COVER	1				0.24	0.528
030	55611-44190	NUT	7				0.004	0.0088
040	6A700-54353	COMP.COVER SIDE	1				1.71	3.762
050	6A700-54384	COVER	1				0.24	0.528
060	55611-44190	NUT	7				0.004	0.0088
070	66591-54580	RUBBER RELEASE ROD	4				0.002	0.0044
080	6A671-54390	GROMMET	2				0.006	0.0132

silverhorn.co.uk

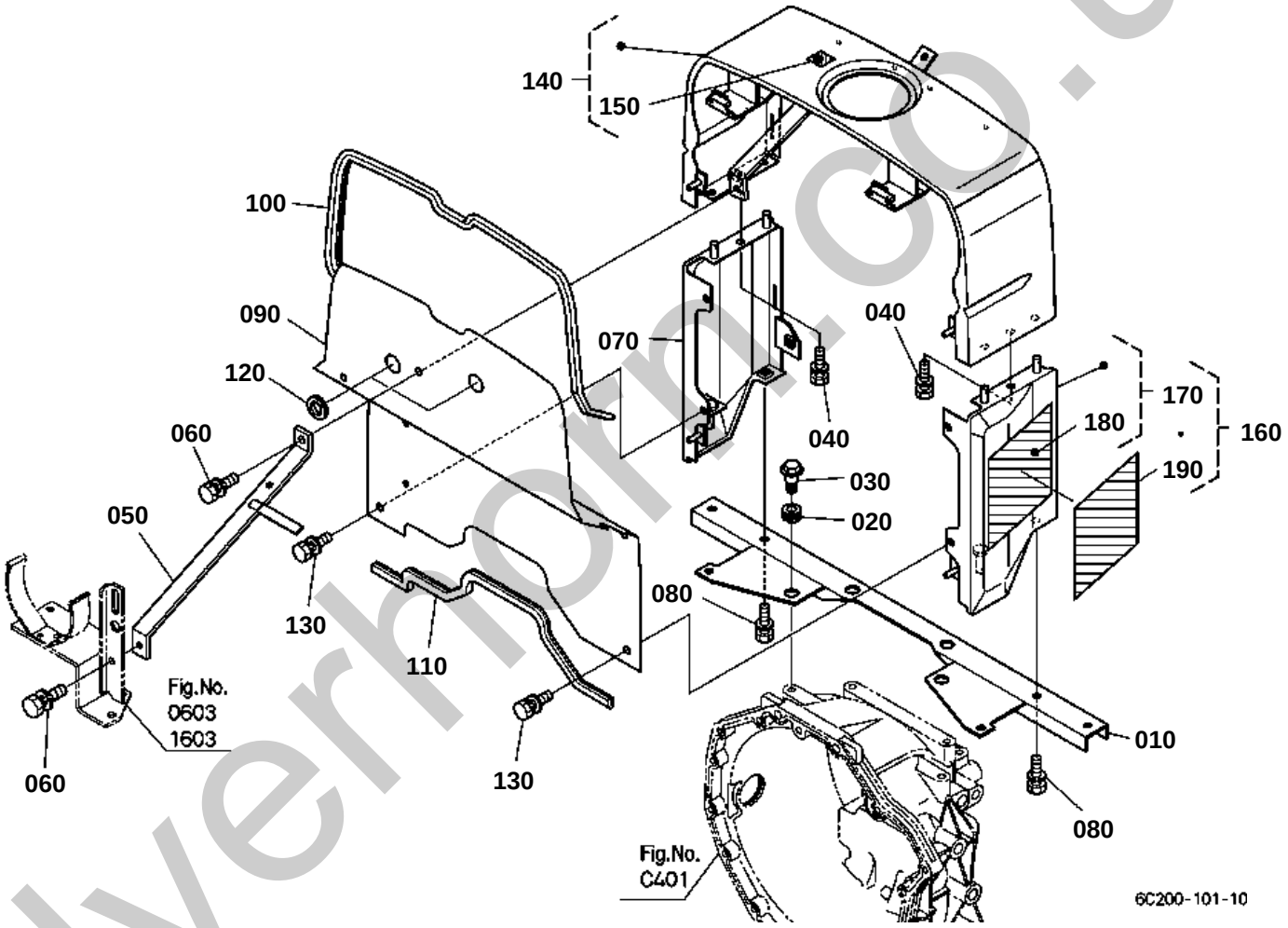

silverhorn.co.uk

SHUTTER PLATE

↔ Interchangeable; ≠ not interchangeable; ← new for old; → old for new

REF.No	Part No.	Description	Q'ty	S.No.	I/C	REMARKS	Weight (kgf)	Weight (lb)
010	6C200-54212	BEAM CENTER	1				0	0
020	6A100-51380	CUSHION	4				0.003	0.0066
030	6C040-51342	BOLT	4				0.017	0.0374
040	01123-60816	BOLT	2				0.01	0.022
050	6C200-54232	STAY PILLAR	1				0	0
060	01023-50616	BOLT	2				0.005	0.011
070	6C200-54253	PILLAR CENTER RH	1				0	0
080	01123-60816	BOLT	2				0.01	0.022
090	6C200-54553	PLATE SHUTTER	1				0	0
100	6C200-54560	TRIM UPPER	1			L=880mm	0	0
110	6C042-52960	TRIM	1			L=450mm	0.057	0.1254
120	54721-38340	GROMMET	2				0.003	0.0066
130	01025-50616	BOLT	4				0.005	0.011
140	6C200-99250	KIT A PILLAR CENTER	1				0	0
150	6C040-47412	LABEL FILLER CAUTION	1				0.001	0.0022
160	6C200-99300	KIT B PILLAR CENT.LH	1			FRENCH	0	0
170	6C200-99350	KIT A PILLAR CENT.LH	1			ENGLISH	0	0
180	6C090-49650	LABEL START CAUTION	1			ENGLISH	0.005	0.011
190	6C091-49650	LABEL START CAUTION	1			FRENCH	0.01	0.022

silverhorn.co.uk

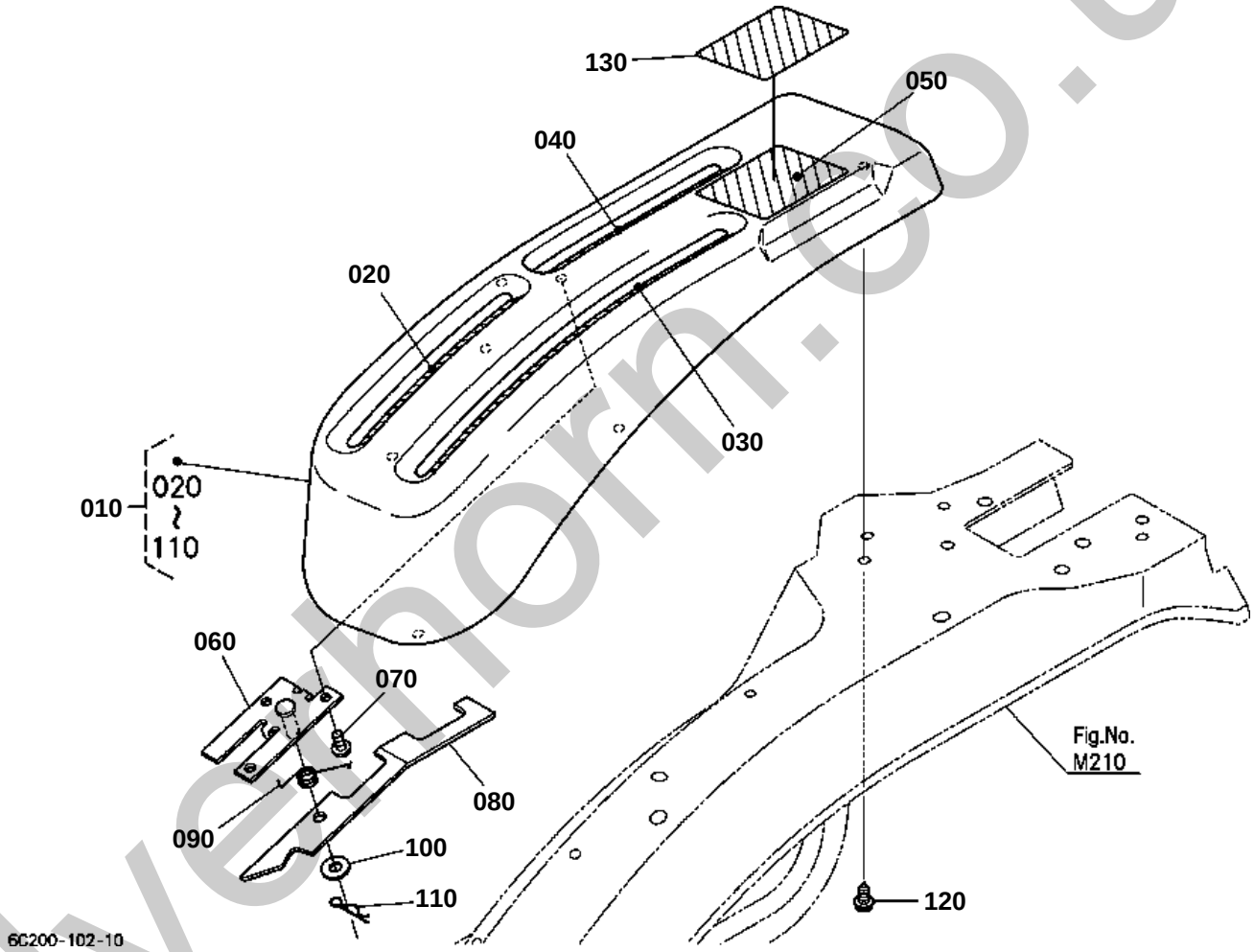

silvethorn.co.uk

↔ Interchangeable; ≠ not interchangeable; ← new for old; → old for new

REF.No	Part No.	Description	Q'ty	S.No.	I/C	REMARKS	Weight (kgf)	Weight (lb)
010	6C200-52102	ASSY GUIDE LEVER LH	1				0	0
020	6C200-47470	LABEL	1				0	0
030	6C200-47380	LABEL PTO	1				0	0
040	6C200-47440	LABEL RANGE SHIFT	1				0	0
050	6C200-47330	LABEL	1			ENGLISH	0	0
060	6C200-52212	STAY PTO	1				0	0
070	03514-50612	SCREW TAPPING	1				0.002	0.0044
080	6C200-52222	PLATE CHECK	1				0	0
090	6C200-52230	SPRING	1				0	0
100	04013-60080	WASHER PLAIN	1				0.002	0.0044
110	05525-50800	PIN SNAP	1				0.001	0.0022
120	6A540-54140	SCREW	4				0.005	0.011
130	6C201-47330	LABEL	1			FRENCH	0	0

silverhorn.co.uk

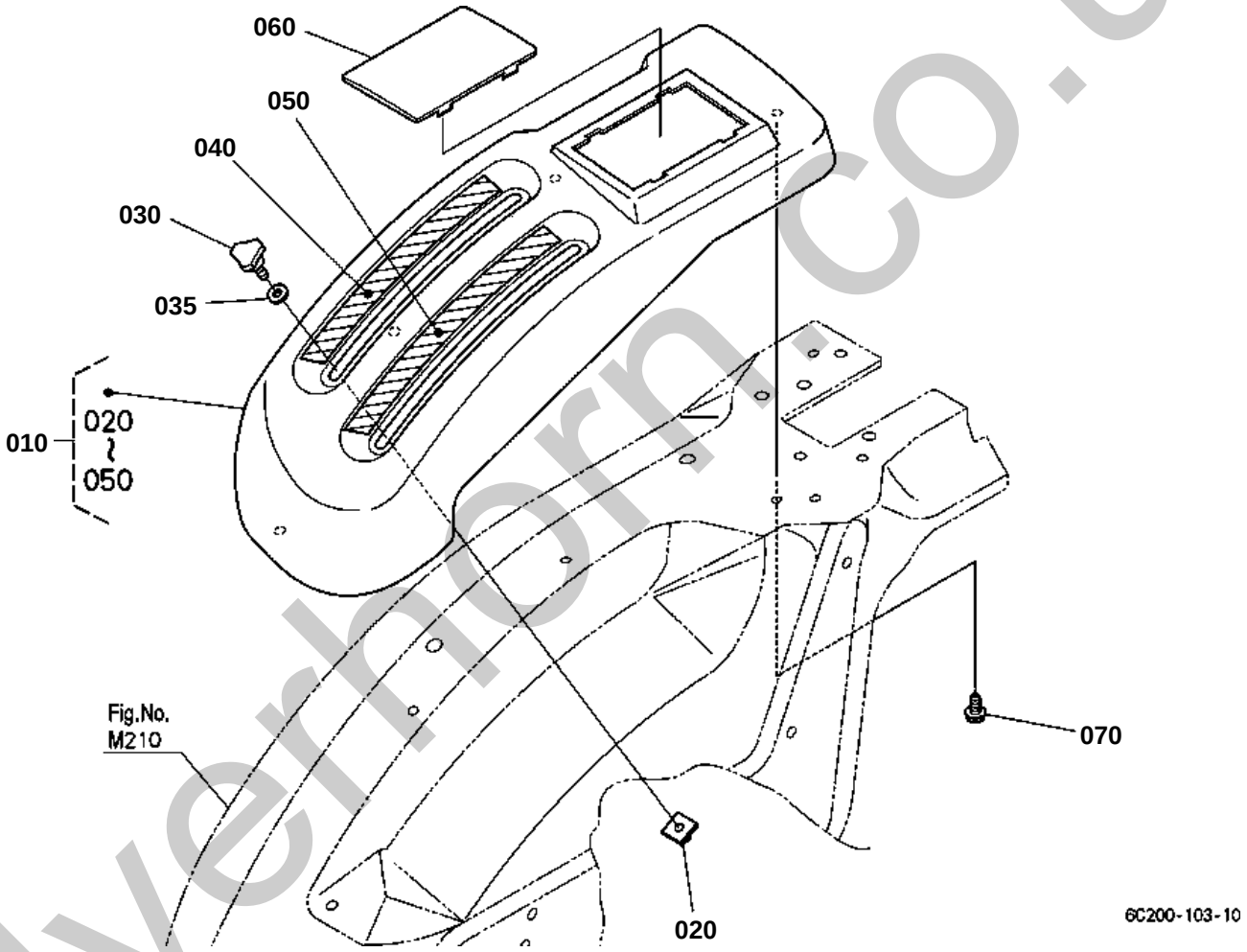

silverhorn.co.uk

↔ Interchangeable; ≠ not interchangeable; ← new for old; → old for new

REF.No	Part No.	Description	Q'ty	S.No.	I/C	REMARKS	Weight (kgf)	Weight (lb)
010	6C200-52142	ASSY GUIDE LEVER RH	1				0	0
020	37410-52380	STOPPER	1				0.015	0.033
030	37410-52610	SCREW KNOB	1				0.015	0.033
035	31351-18860	WASHER	1				0.002	0.0044
040	6C200-47340	LABEL CRUISE CONTROL	1				0	0
050	6C200-47350	LABEL POSITION	1				0	0
060	6C200-52130	COVER CONTROLLER	1				0	0
070	6A540-54140	SCREW	4				0.005	0.011

silverhorn.co.uk

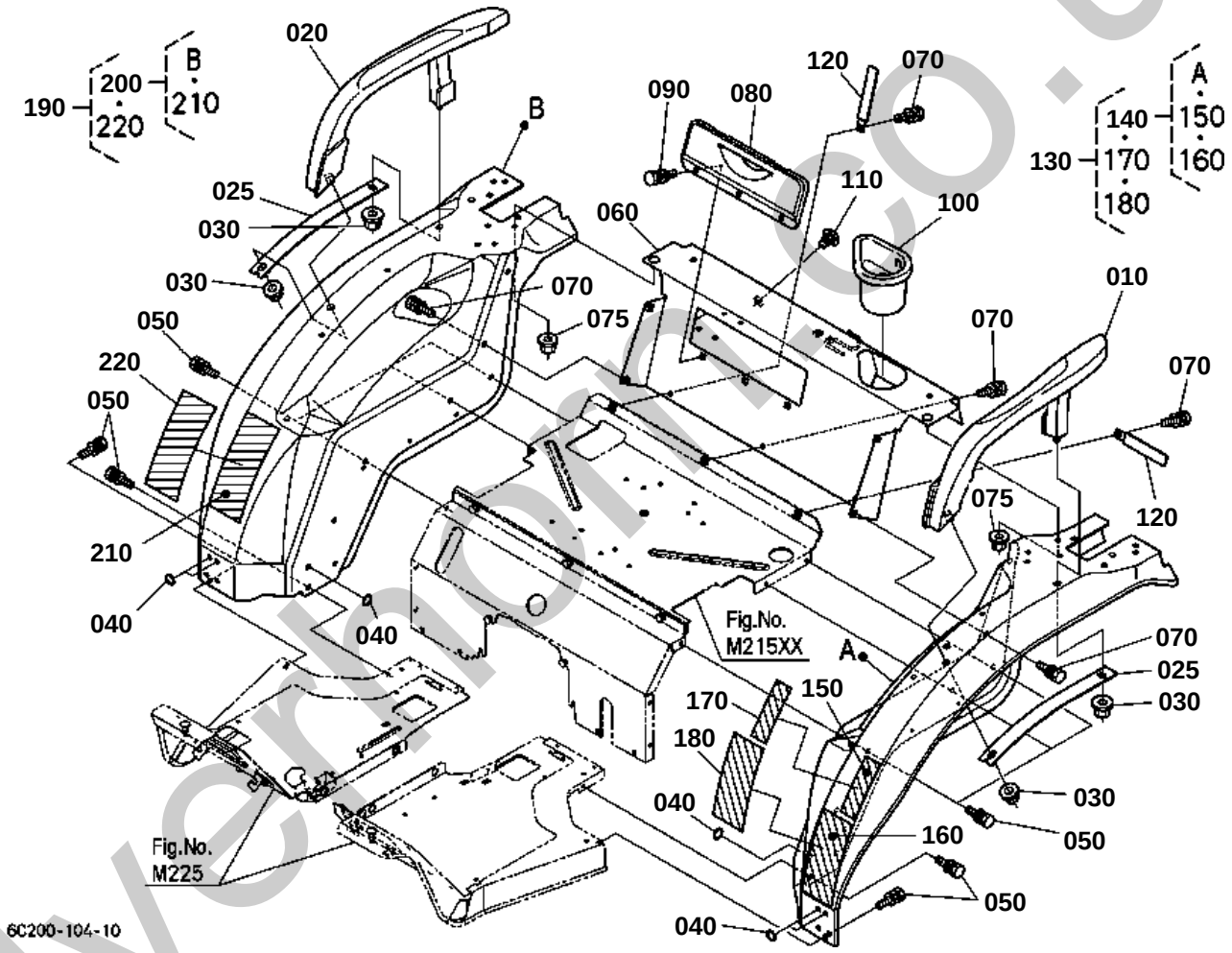

silvermoon.co.uk

↔ Interchangeable; ≠ not interchangeable; ← new for old; → old for new

REF.No	Part No.	Description	Q'ty	S.No.	I/C	REMARKS	Weight (kgf)	Weight (lb)
010	6C200-52173	HANDRAIL LH	1				0	0
020	6C200-52183	HANDRAIL RH	1				0	0
025	6A700-52130	STAY	2				0	0
030	02783-50100	NUT FLANGE	4				0.01	0.022
040	6A741-52740	SEAL	6				0.001	0.0022
050	01125-60820	BOLT	14				0.015	0.033
060	6C200-51443	COVER FENDER REAR	1				0	0
070	01125-60820	BOLT	7				0.015	0.033
075	02121-50080	NUT	2				0.01	0.022
080	T2055-47260	COVER TOOLS BOX	1				0.085	0.187
090	01025-50620	BOLT	3				0.02	0.044
100	TC220-47292	HOLDER CUP	1				0.12	0.264
110	38240-29570	PLUG	1				0.001	0.0022
120	13824-67580	CLAMP CORD	2				0.006	0.0132
130	6C200-99100	KIT FENDER LH(A)	1			FRENCH	0	0
140	6C200-99130	KIT FENDER LH(A)	1			ENGLISH	0	0
150	6C070-47422	LABEL SAFETY	1			ENGLISH	0.005	0.011
160	6C150-47430	LABEL PARKING	1			ENGLISH	0.002	0.0044
170	6C071-47422	LABEL SAFETY	1			FRENCH	0.005	0.011
180	6C151-47430	LABEL PARKING WARNIN	1			FRENCH	0.002	0.0044
190	6C200-99160	KIT FENDER RH(B)	1			FRENCH	0	0
200	6C200-99140	KIT FENDER RH(A)	1			ENGLISH	0	0
210	TA040-49320	LABEL ROPS WARNING	1			ENGLISH RIGID ROPS TYPE	0.001	0.0022
220	TA040-49150	LABEL ROPS WARNING	1			FRENCH RIGID ROPS TYPE	0.003	0.0066

silverhorn.co.uk

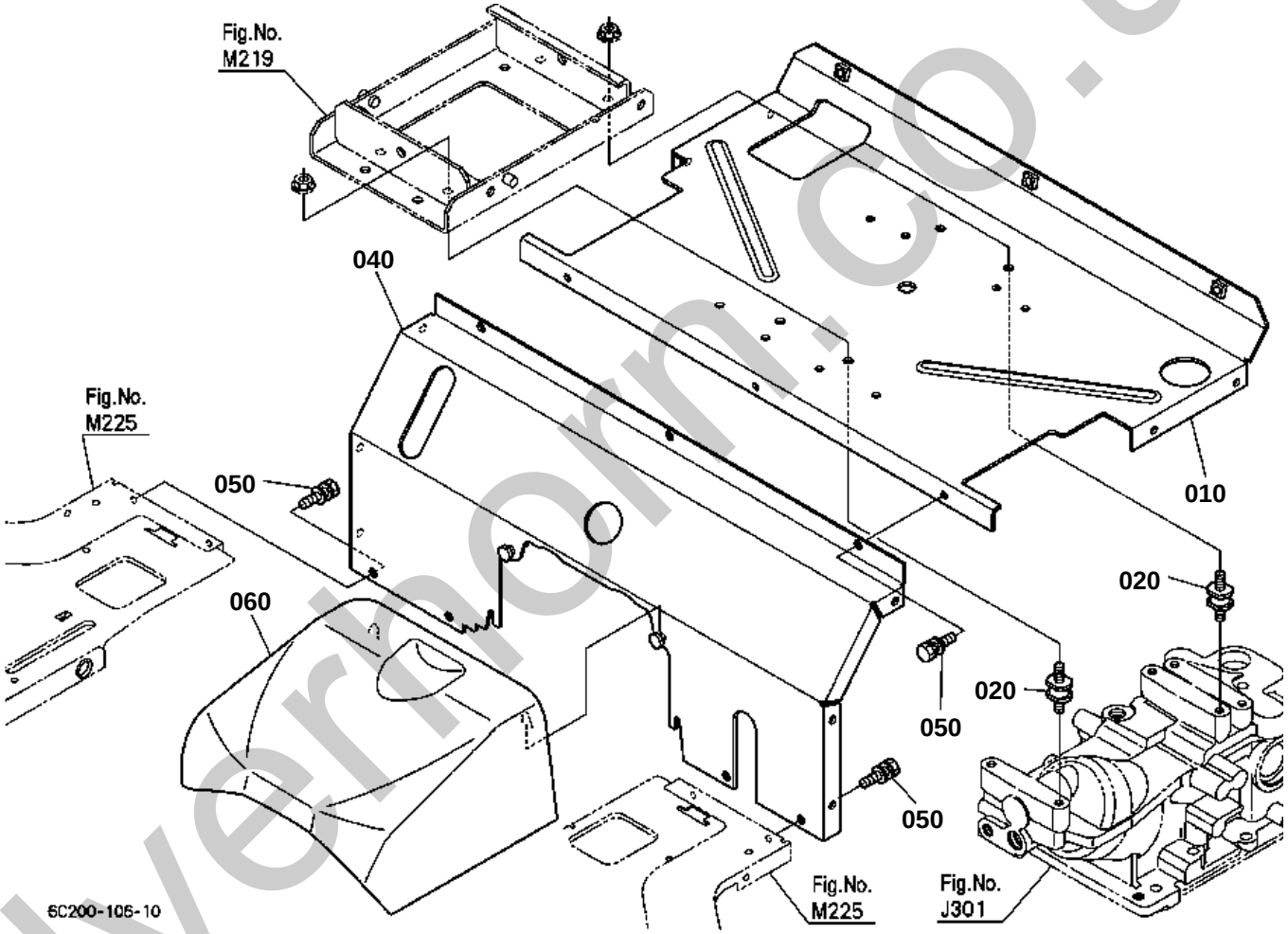

silvermorn.co.uk

FLOOR SEAT

↔ Interchangeable; ≠ not interchangeable; ← new for old; → old for new

REF.No	Part No.	Description	Q'ty	S.No.	I/C	REMARKS	Weight (kgf)	Weight (lb)
010	6C200-51342	COVER SEAT UNDER	1				0	0
020	14911-41410	CUSHION RUBBER	4				0.039	0.0858
030	99999-99999	BLANK	0				0	0
040	6C200-51373	COVER FRONT	1				0	0
050	01125-60820	BOLT	7				0.015	0.033
060	6C200-51352	COVER FRONT	1				0	0

silverhorn.co.uk

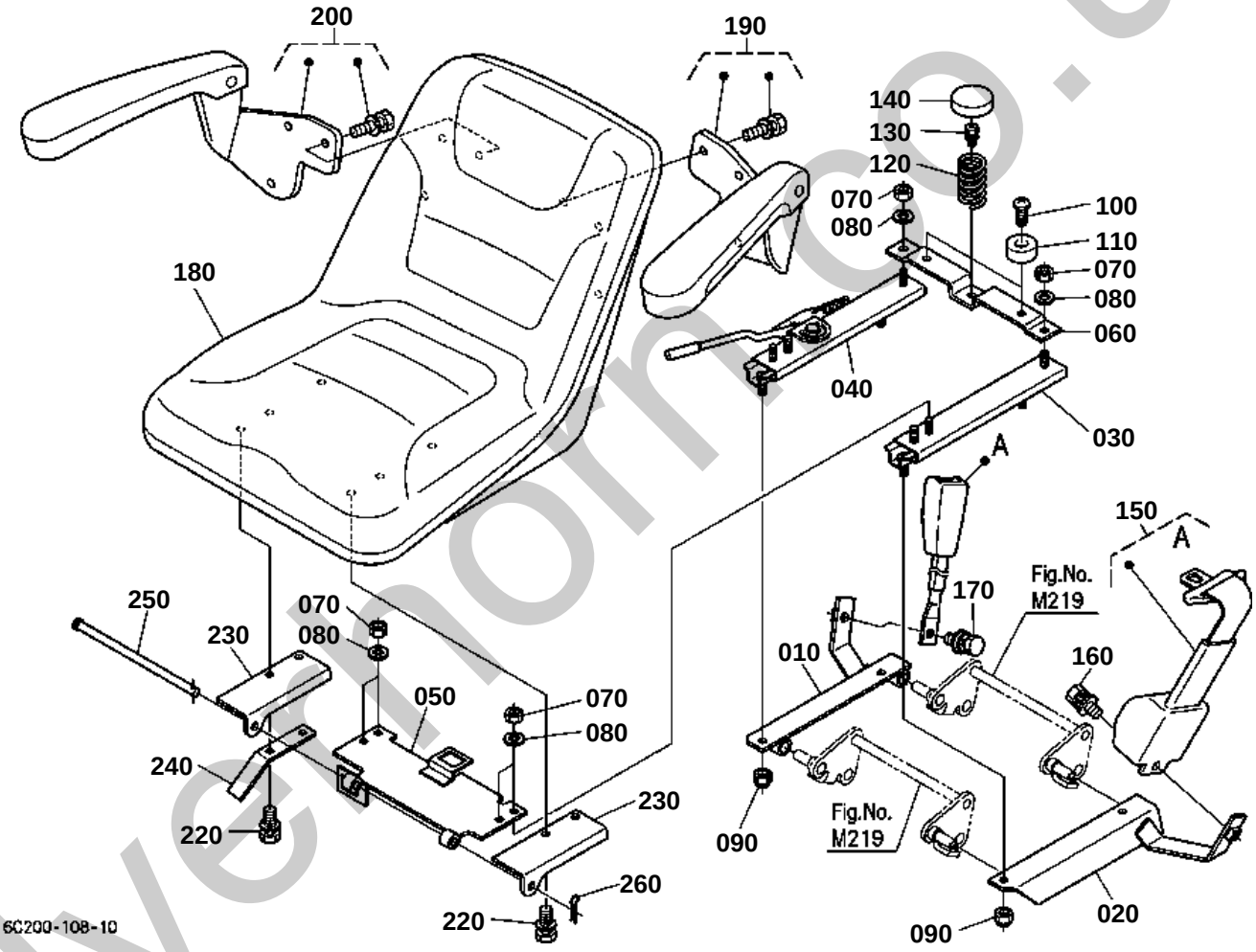

silverthorn.co.uk

↔ Interchangeable; ≠ not interchangeable; ← new for old; → old for new

REF.No	Part No.	Description	Q'ty	S.No.	I/C	REMARKS	Weight (kgf)	Weight (lb)
010	6C220-45830	PLATE LINK RH	1				0	0
020	6C170-45840	PLATE LINK LH	1				0.73	1.606
030	6C140-45910	ADJUSTER SEAT LH	1				0.65	1.43
040	6C140-45920	ADJUSTER SEAT RH	1				0.85	1.87
050	6C220-45973	BRACKET ADJUSTER	1				0	0
060	6C220-45990	BRACKET ADJUSTER	1				0	0
070	02114-50080	NUT	6				0.005	0.011
080	04512-60080	WASHER SPRING	6				0.002	0.0044
090	02552-50080	NUT LOCK	4				0.005	0.011
100	03014-50820	SCREW PAN-HEAD	2				0.01	0.022
110	TA140-47780	CUSHION	2				0.043	0.0946
120	6C170-45940	SPRING SEAT SWITCH	1				0	0
130	01125-60820	BOLT	1				0.015	0.033
140	6C060-45990	CAP SPRING	1				0.011	0.0242
150	K2561-56850	ASSY BELT SEAT	1				0.81	1.782
160	01135-61020	BOLT	1				0.015	0.033
170	01135-61025	BOLT	1				0.04	0.088
180	K2571-56110	SEAT	1				9	19.8
190	6C200-88760	ARMREST LH	1				0	0
200	6C200-88770	ARMREST RH	1				0	0
210	99999-99999	BLANK	0				0	0
220	01123-50820	BOLT	4				0.011	0.0242
230	6C220-45960	STAY SEAT	2				0	0
240	6C170-45730	SPRING RETAINER	1				0.02	0.044
250	6C220-45930	PIN SEAT ADJUSTER	1				0	0
260	05525-61000	PIN SNAP	1				0.002	0.0044

silverhorn.co.uk

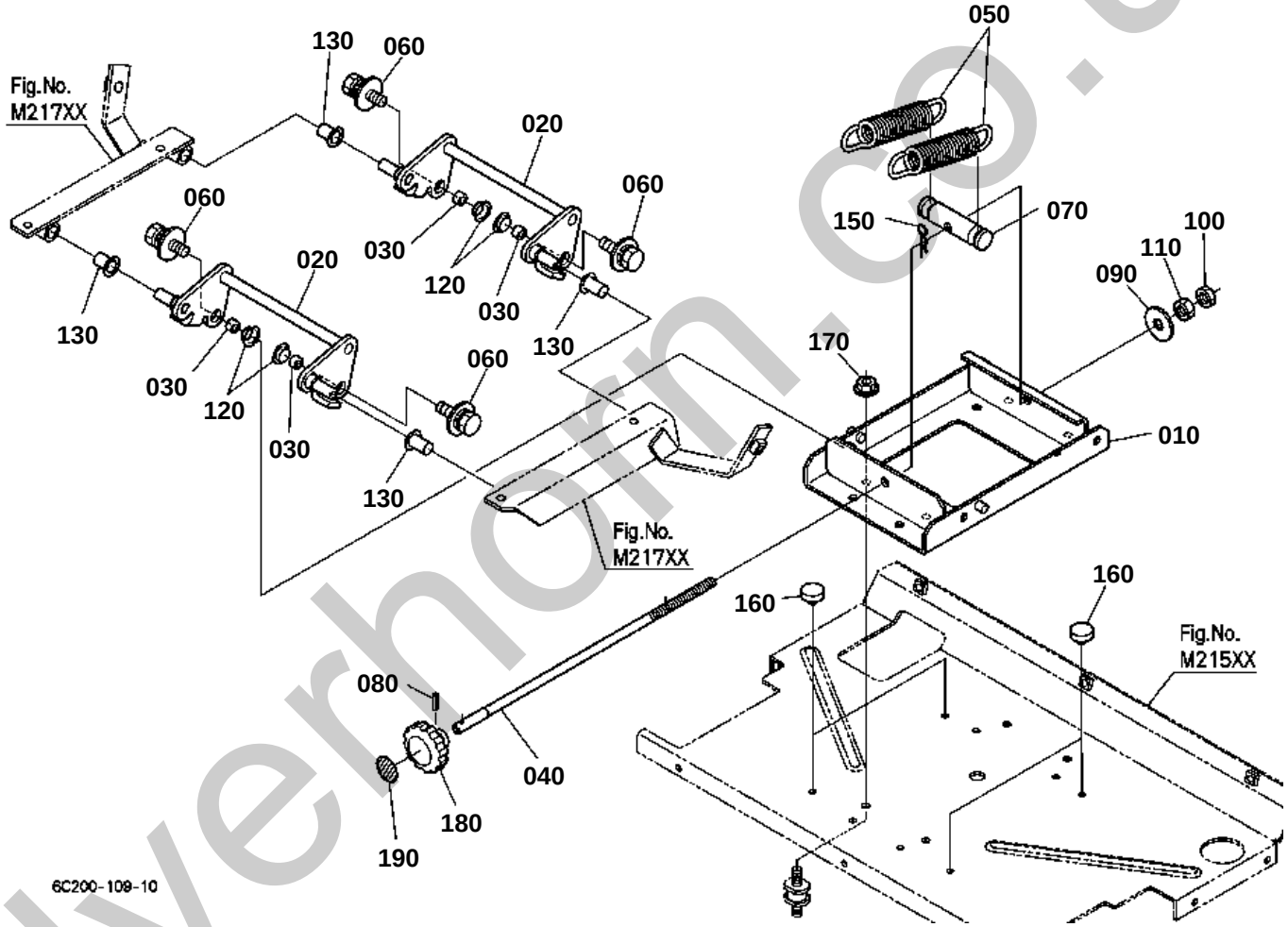

silverhorn.co.uk

SEAT SUSPENSION

↔ Interchangeable; ≠ not interchangeable; ← new for old; → old for new

REF.No	Part No.	Description	Q'ty	S.No.	I/C	REMARKS	Weight (kgf)	Weight (lb)
010	6C220-45810	BASE SUSPENSION	1				0	0
020	6C170-45820	LINK SUSPENSION	2				0.59	1.298
030	6C170-45880	SPACER SUSPENSION	4				0.004	0.0088
040	6C170-45850	SHAFT ADJUSTER	1				0.22	0.484
050	6C170-45870	SPRING SUSPENSION	2				0.23	0.506
060	01127-50825	BOLT	4				0.01	0.022
070	6C170-45860	HANGER SPRING	1				0.22	0.484
080	05411-00414	PIN SPRING	1				0.001	0.0022
090	04015-60100	WASHER PLAIN	1				0.015	0.033
100	68011-32680	NUT LOCK	1				0.006	0.0132
110	55311-31550	NUT	1				0.007	0.0154
120	6C170-45950	BUSH SUSPENSION	4				0.003	0.0066
130	6C170-45960	BUSH SUSPENSION	4				0.007	0.0154
140	99999-99999	BLANK	0				0	0
150	05525-61000	PIN SNAP	1				0.002	0.0044
160	6C040-42342	CUSHION	4				0.005	0.011
170	02121-50080	NUT	4				0.01	0.022
180	T0070-34560	GRIP	1				0.011	0.0242
190	6C170-45980	LABEL ADJUSTER	1				0.001	0.0022

silverhorn.co.uk

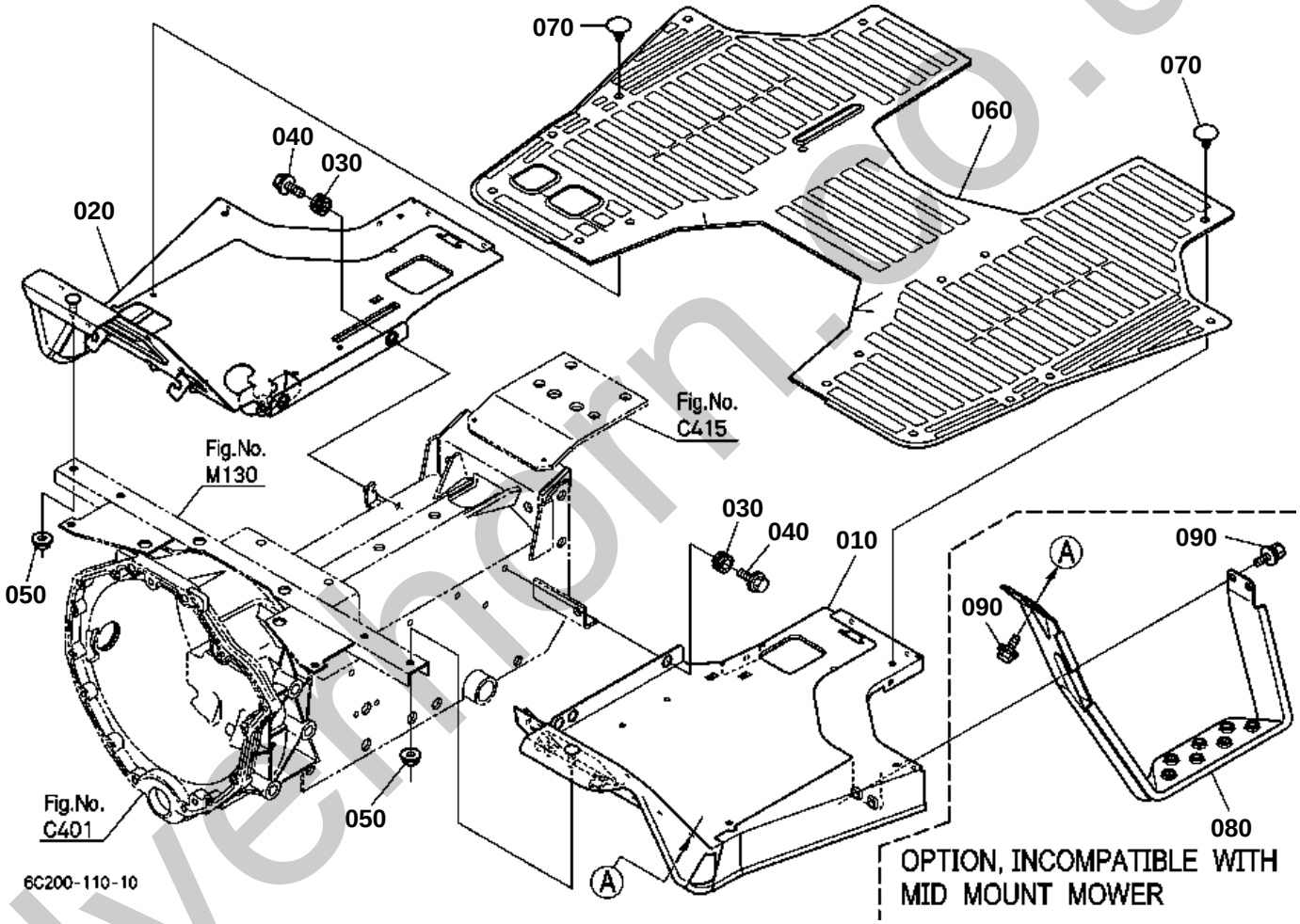

silvermorn.co.uk

↔ Interchangeable; ≠ not interchangeable; ← new for old; → old for new

REF.No	Part No.	Description	Q'ty	S.No.	I/C	REMARKS	Weight (kgf)	Weight (lb)
010	6C200-51315	COMP.STEP LH	1				0	0
020	6C200-51320	COMP.STEP RH	1				0	0
030	6A700-51330	CUSHION	4				0.002	0.0044
040	6C040-51342	BOLT	4				0.017	0.0374
050	02121-50080	NUT	2				0.01	0.022
060	6C200-51362	MAT STEP	1				0	0
070	67955-51340	STOPPER	17				0.001	0.0022
080	6A700-51350	STEP AID	1			OPTION INCOMPATIBLE WITH MID MOUNT MOWER	0.94	2.068
090	01125-60816	BOLT	4			OPTION INCOMPATIBLE WITH MID MOUNT MOWER	0.01	0.022

silverhorn.co.uk

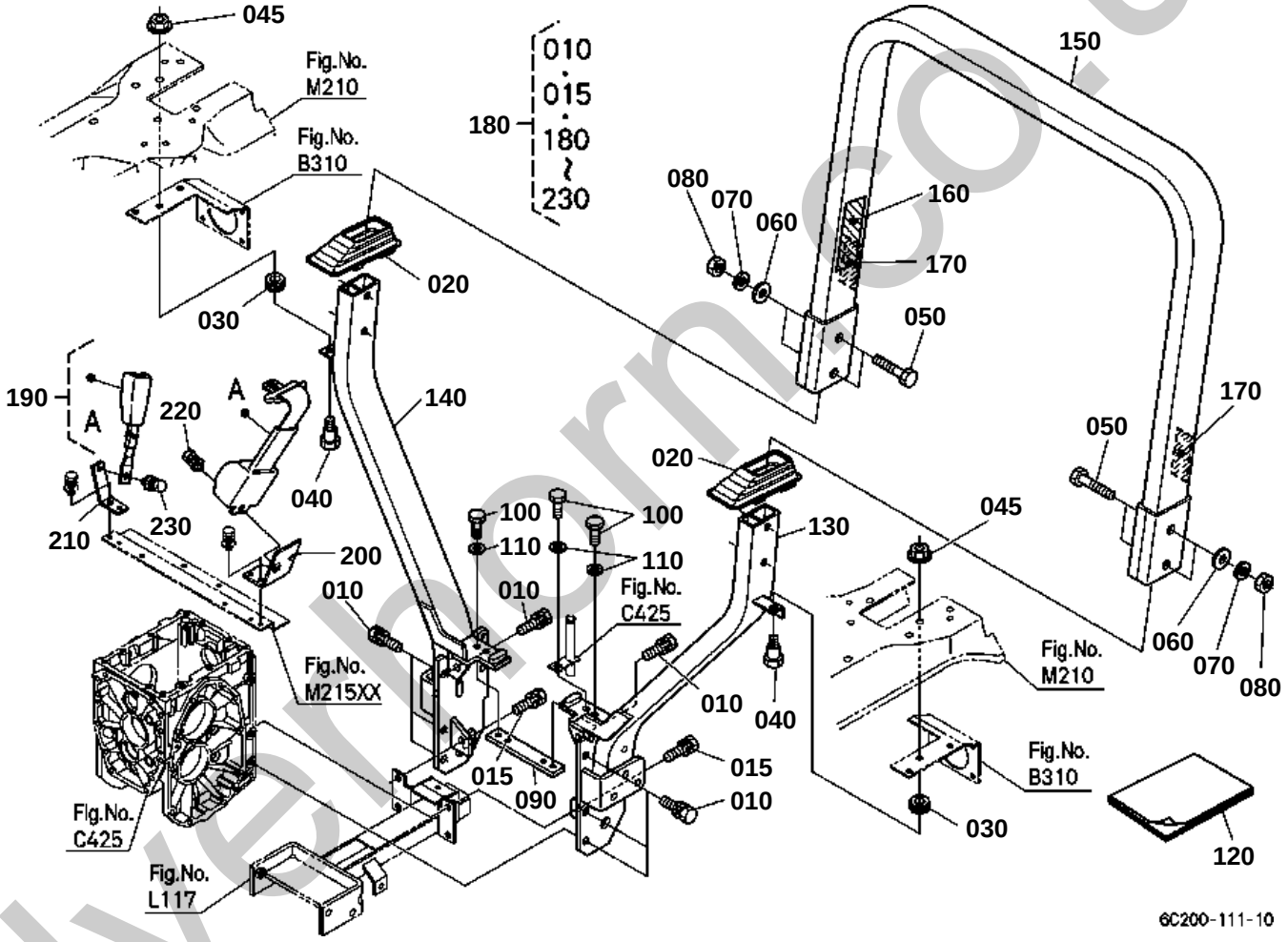

silverfarm.co.uk

↔ Interchangeable; ≠ not interchangeable; ← new for old; → old for new

REF.No	Part No.	Description	Q'ty	S.No.	I/C	REMARKS	Weight (kgf)	Weight (lb)
010	01123-51235	BOLT	8				0.041	0.0902
015	01123-51240	BOLT	2				0.048	0.1056
020	6C200-72210	COVER ROPS	2				0	0
030	6A100-51380	CUSHION	2				0.003	0.0066
040	6C040-51342	BOLT	2				0.017	0.0374
045	02121-50080	NUT	2				0.01	0.022
050	0Y109-50944	BOLT	4				0.1	0.22
060	04013-60140	WASHER PLAIN	4				0.01	0.022
070	0Y450-50090	WASHER SPRING	4				0.007	0.0154
080	0Y205-50090	NUT	4				0.03	0.066
090	99999-99999	PLATE CONNECTOR	1				0	0
100	0Y109-50616	BOLT	4				0.2	0.44
110	0Y450-50060	WASHER SPRING	4				0.003	0.0066
120	99999-99999	MANUAL ASSEMBLY	1				0	0
130	99999-99999	FRAME LOWER LH	1				0	0
140	99999-99999	ASSY FRAME LOWER RH	1				0	0
150	99999-99999	FRAME UPPER	1				0	0
160	6C140-47460	LABEL ROPS WARNING	1			ENGLISH	0.001	0.0022
160	6C141-47460	LABEL ROPS WARNING	1			FRENCH	0.001	0.0022
170	6C140-54990	REFLECTOR LABEL	2				0.003	0.0066
180	6C200-88500	ASSY ROPS	1				0	0
190	K2561-56850	SEAT BELT ASSY	1				0.81	1.782
200	6C070-52760	STAY SEAT BELT LH	1			EXCEPT B3030HSD	0.115	0.253
210	6C040-52770	STAY SEAT BELT RH	1			EXCEPT B3030HSD	0.1	0.22
220	01135-61020	BOLT	1				0.015	0.033
230	01135-61025	BOLT	1				0.04	0.088

silverhorn.co.uk

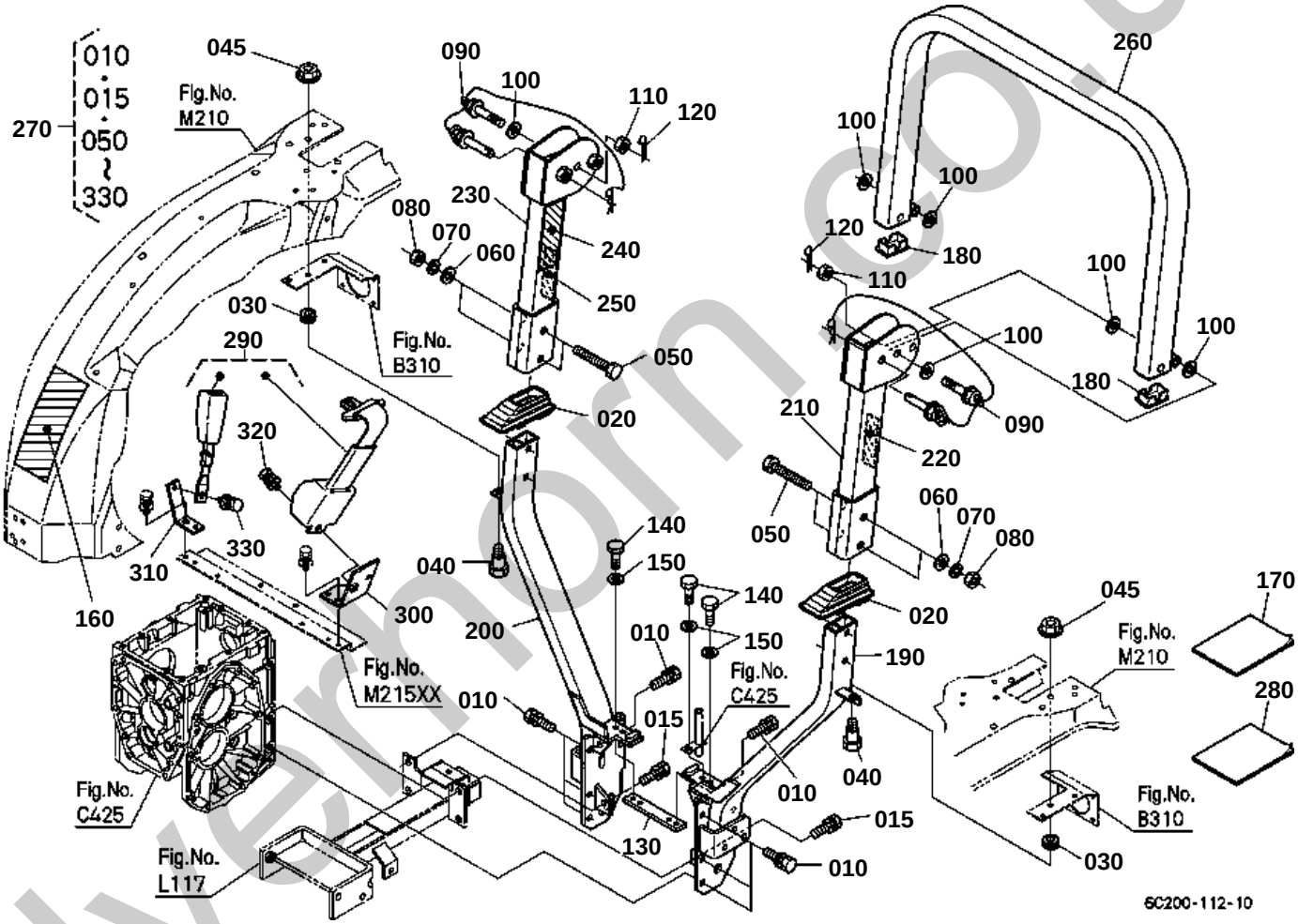

silvermorn.co.uk

↔ Interchangeable; ≠ not interchangeable; ← new for old; → old for new

REF.No	Part No.	Description	Q'ty	S.No.	I/C	REMARKS	Weight (kgf)	Weight (lb)
010	01123-51235	BOLT	8				0.041	0.0902
015	01123-51240	BOLT	2				0.048	0.1056
020	6C200-72210	COVER ROPS	2				0	0
030	6A100-51380	CUSHION	2				0.003	0.0066
040	6C040-51342	BOLT	2				0.017	0.0374
045	02121-50080	NUT	2				0.01	0.022
050	0Y109-50952	BOLT	4				0.11	0.242
060	04013-60140	WASHER PLAIN	4				0.01	0.022
070	0Y450-50090	WASHER SPRING	4				0.007	0.0154
080	0Y205-50090	NUT	4				0.03	0.066
090	TA240-48752	SET BOLT	2				0.435	0.957
100	04013-60160	WASHER PLAIN	6				0.01	0.022
110	02254-50160	NUT	2				0.04	0.088
120	05511-50430	PIN SPLIT	2				0.004	0.0088
130	99999-99999	PLATE CONNECTOR	1				0	0
140	0Y109-50616	BOLT	4				0.2	0.44
150	0Y450-50060	WASHER SPRING	4				0.003	0.0066
160	TA240-98480	LABEL ROPS WARNING	1			ENGLISH	0.005	0.011
160	3A112-98480	LABEL ROPS WARNING	1			FRENCH	0.004	0.0088
170	99999-99999	MANUAL ASSEMBLY	1				0	0
180	TC050-48773	COVER ROPS	2				0.03	0.066
190	99999-99999	FRAME LOWER LH	1				0	0
200	99999-99999	ASSY FRAME LOWER RH	1				0	0
210	99999-99999	FRAME MIDDLE LH	1				0	0
220	6C140-54990	REFLECTOR LABEL	1				0.003	0.0066
230	99999-99999	FRAME MIDDLE RH	1				0	0
240	3A111-95540	LABEL ROPS CAUTION	1			ENGLISH	0.003	0.0066
240	3A112-95540	LABEL ROPS CAUTION	1			FRENCH	0.003	0.0066
250	6C140-54990	REFLECTOR LABEL	1				0.003	0.0066
260	99999-99999	FRAME UPPER	1				0	0
270	6C200-89500	ASSY ROPS	1				0	0
280	TA240-48680	OPERATOR'S MANUAL	1				0.025	0.055
290	K2561-56850	SEAT BELT ASSY	1				0.81	1.782
300	6C070-52760	STAY SEAT BELT LH	1			EXCEPT B3030HSD	0.115	0.253
310	6C040-52770	STAY SEAT BELT RH	1			EXCEPT B3030HSD	0.1	0.22
320	01135-61020	BOLT	1				0.015	0.033
330	01135-61025	BOLT	1				0.04	0.088

silvermorn.co.uk

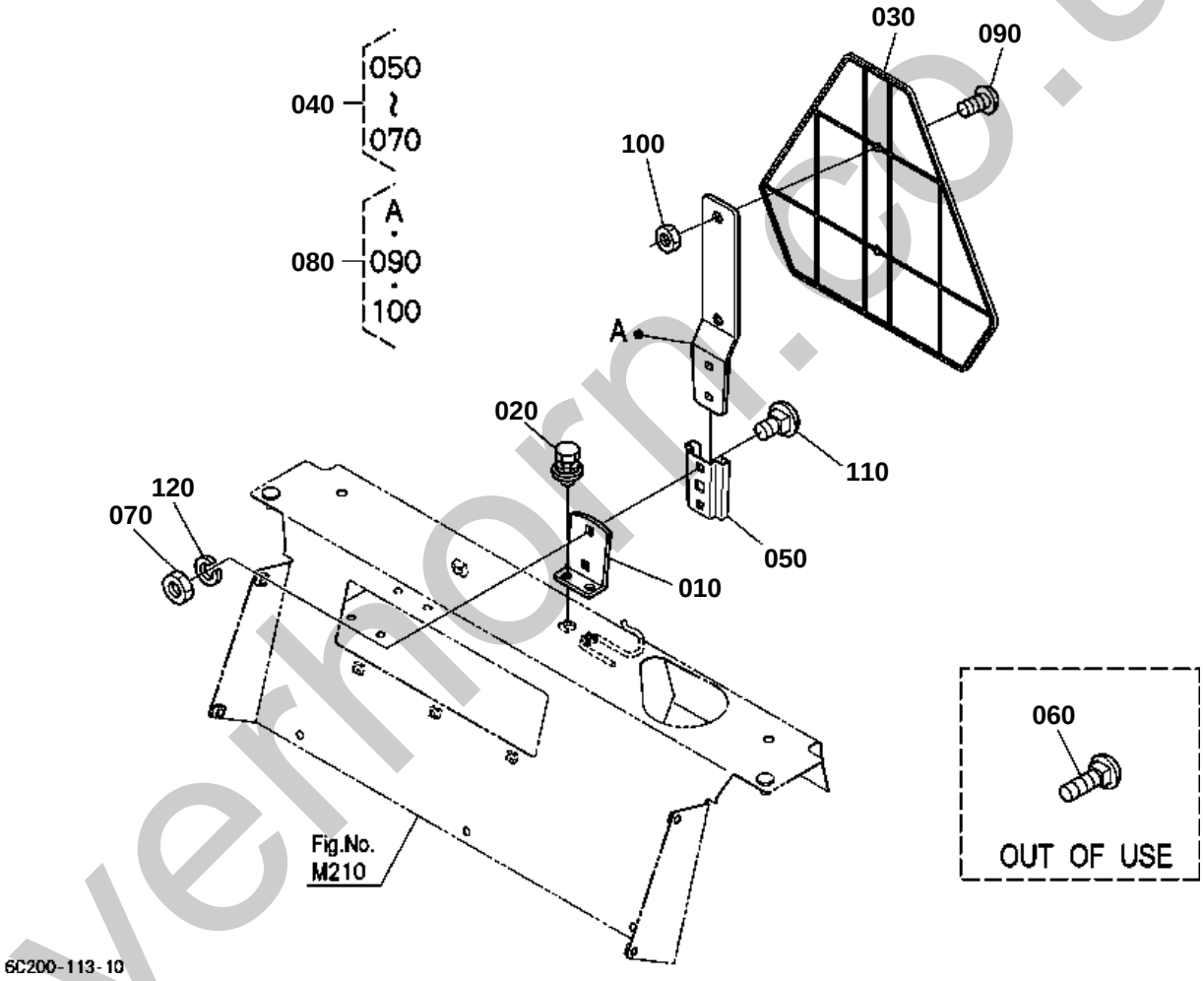

silverthorn.co.uk

SMV EMBLEM

↔ Interchangeable; ≠ not interchangeable; ← new for old; → old for new

REF.No	Part No.	Description	Q'ty	S.No.	I/C	REMARKS	Weight (kgf)	Weight (lb)
010	6C070-54950	BRACKET SMV	1				0.1	0.22
020	01125-60816	BOLT	2				0.01	0.022
030	7L500-89912	SIGN SMV	1				0.32	0.704
040	7L500-89920	SOCKET SMV SIGN	1				0.1	0.22
050	7L500-89930	SOCKET-MTG SMV	1				0.05	0.11
060	7L500-89940	BOLT SQUARE NECK	2			OUT OF USE	0.01	0.022
070	7L500-89950	NUT	2				0.004	0.0088
080	7L500-89960	SPADE SMV SIGN	1				0.24	0.528
090	7L500-89980	VIS	2				0.02	0.044
100	7L500-89990	NUT	2				0.001	0.0022
110	7L500-89810	BOLT SQUARE NECK	2				0.011	0.0242
120	04512-60080	WASHER SPRING	2				0.002	0.0044

silverhorn.co.uk

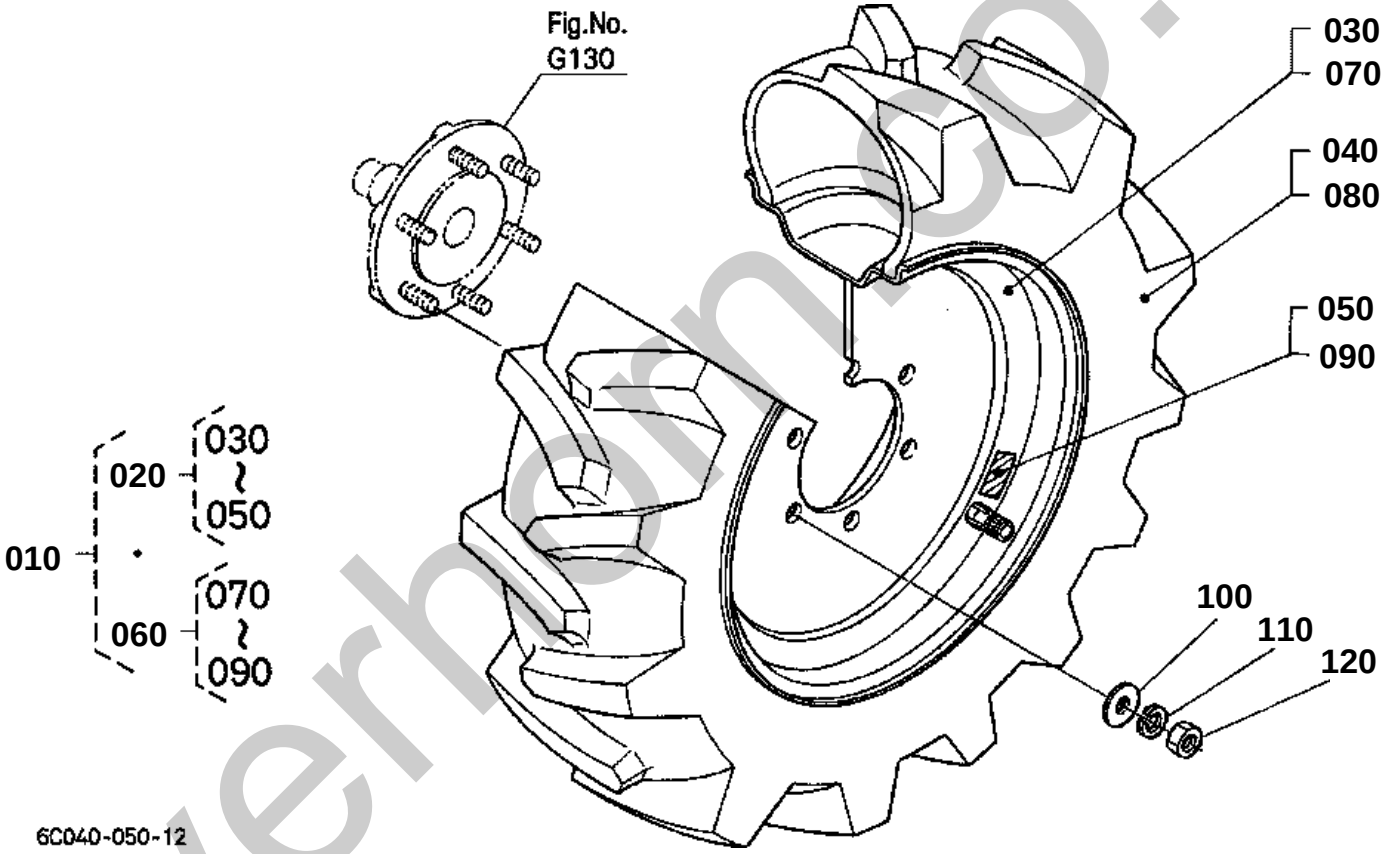

silverhorn.co.uk

↔ Interchangeable; ≠ not interchangeable; ← new for old; → old for new

REF.No	Part No.	Description	Q'ty	S.No.	I/C	REMARKS	Weight (kgf)	Weight (lb)
010	6C040-50310	ASSY TIRE	1				0	0
020	6C040-50320	ASSY TIRE LH	1				0	0
030	6C040-50240	WHEEL	1				0	0
040	6C040-50350	TIRE	1				0	0
050	6C040-50360	LABEL TIRE LH	1			NOT SALE	0	0
060	6C040-50330	ASSY TIRE RH	1				0	0
070	6C040-50240	WHEEL	1				0	0
080	6C040-50350	TIRE	1				0	0
090	6C040-50370	LABEL TIRE RH	1			NOT SALE	0	0
100	04013-60120	WASHER PLAIN	12				0.01	0.022
110	04512-60120	WASHER SPRING	12				0.005	0.011
120	02176-50120	NUT	12				0.01	0.022

silverhorn.co.uk

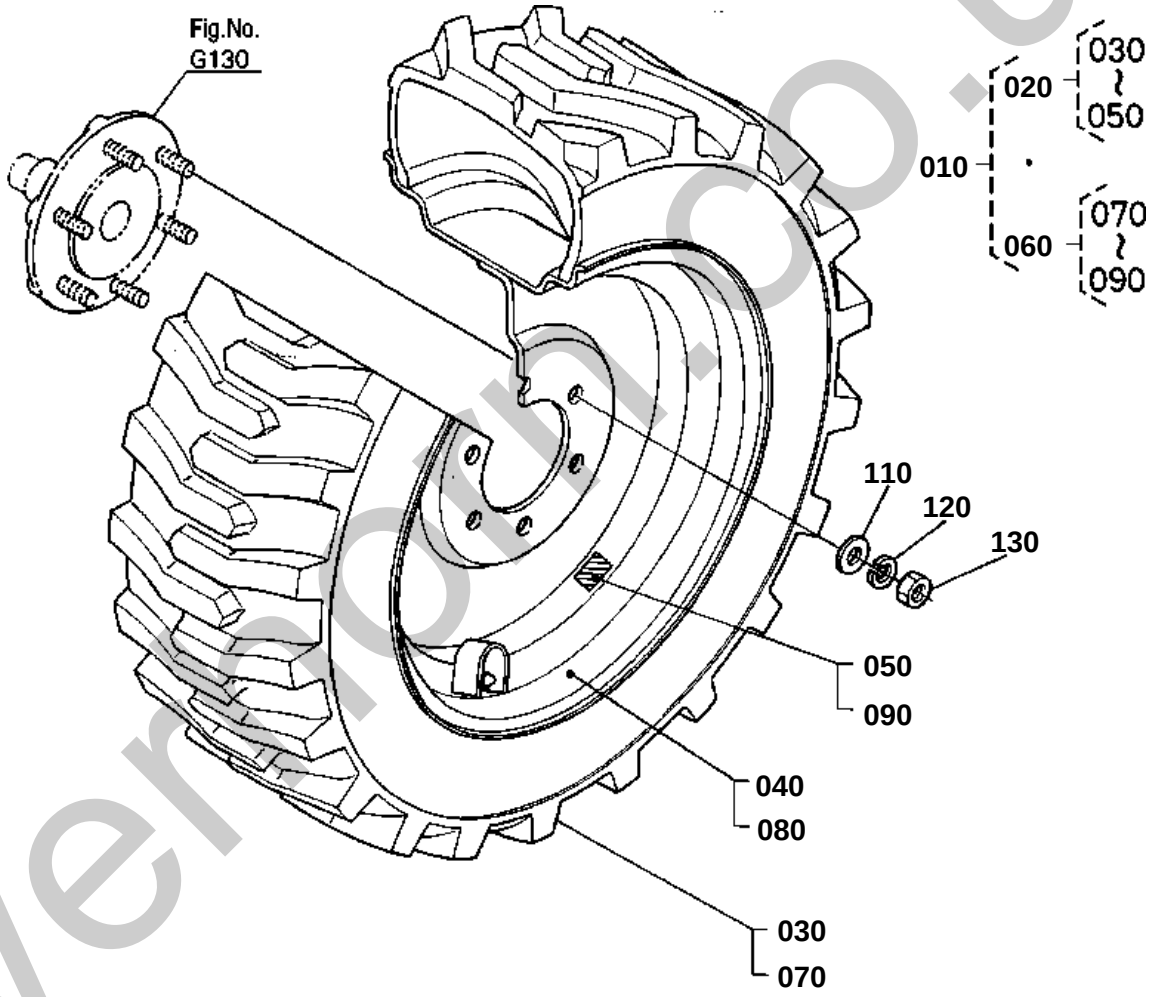

silvermorn.co.uk

FRONT WHEEL(23*8.50-14R4)

↔ Interchangeable; ≠ not interchangeable; ← new for old; → old for new

REF.No	Part No.	Description	Q'ty	S.No.	I/C	REMARKS	Weight (kgf)	Weight (lb)
010	32721-50500	ASSY TIRE	1				0	0
020	32721-50510	ASSY TIRE RH	1				0	0
030	32721-50530	TIRE	1				11	24.2
040	32721-50540	WHEEL	1				11	24.2
050	32721-50550	LABEL RH	1			NOT SALE	0	0
060	32721-50520	ASSY TIRE LH	1				0	0
070	32721-50530	TIRE	1				11	24.2
080	32721-50540	WHEEL	1				11	24.2
090	32721-50560	LABEL LH	1			NOT SALE	0	0
100	99999-99999	BLANK	0				0	0
110	04013-60120	WASHER PLAIN	12				0.01	0.022
120	04512-60120	WASHER SPRING	12				0.005	0.011
130	02176-50120	NUT	12				0.01	0.022

silverhorn.co.uk

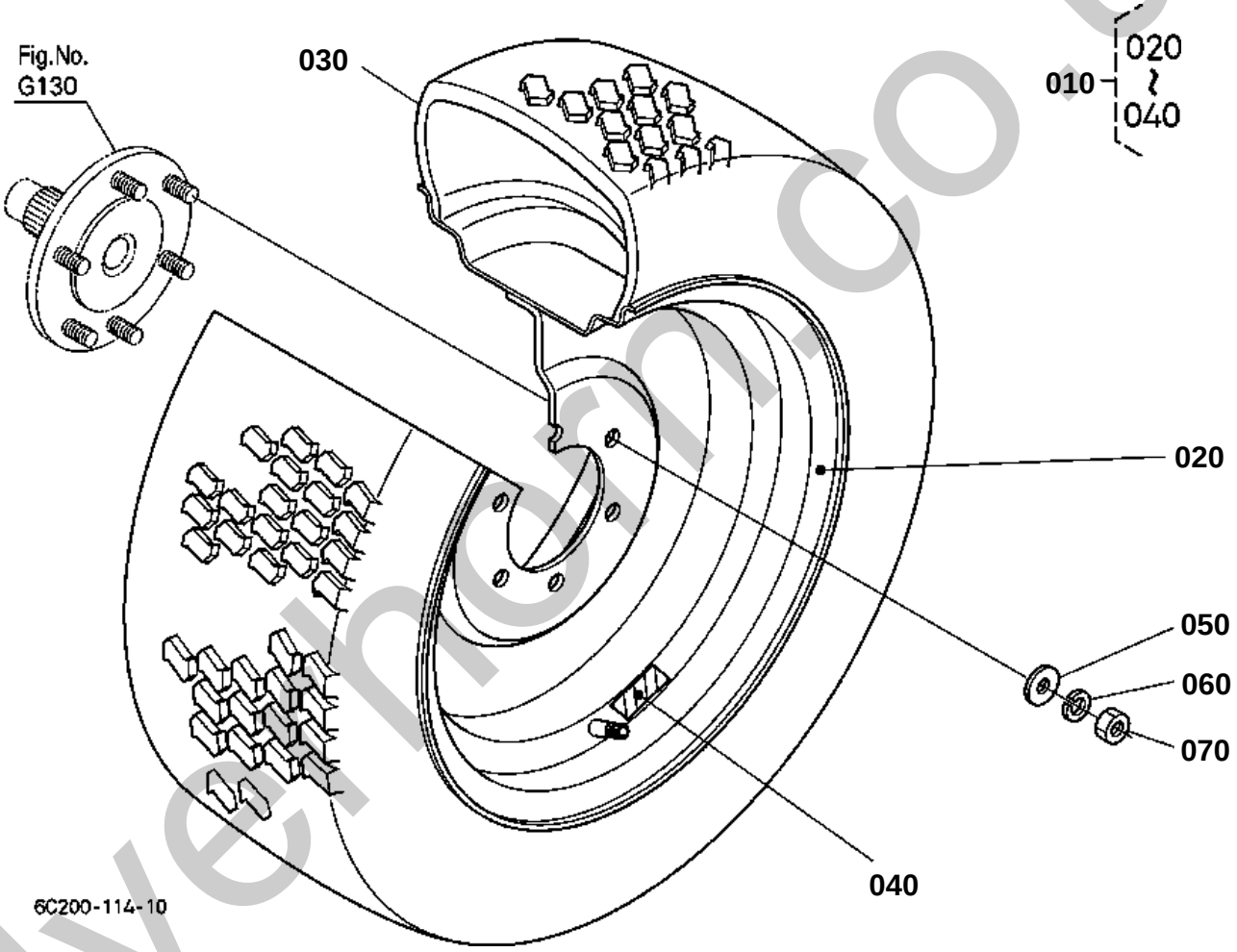

silverhorn.co.uk

FRONT WHEEL(24*8.50-14)

↔ Interchangeable; ≠ not interchangeable; ← new for old; → old for new

REF.No	Part No.	Description	Q'ty	S.No.	I/C	REMARKS	Weight (kgf)	Weight (lb)
010	6C070-50220	TIRE ASSY	2				0	0
020	6C070-50230	WHEEL	2				0	0
030	6C070-50240	TIRE	2				0	0
040	6C070-50250	LABEL TIRE	2			NOT SALE	0	0
050	04013-60120	WASHER PLAIN	12				0.01	0.022
060	04512-60120	WASHER SPRING	12				0.005	0.011
070	02176-50120	NUT	12				0.01	0.022

silverhorn.co.uk

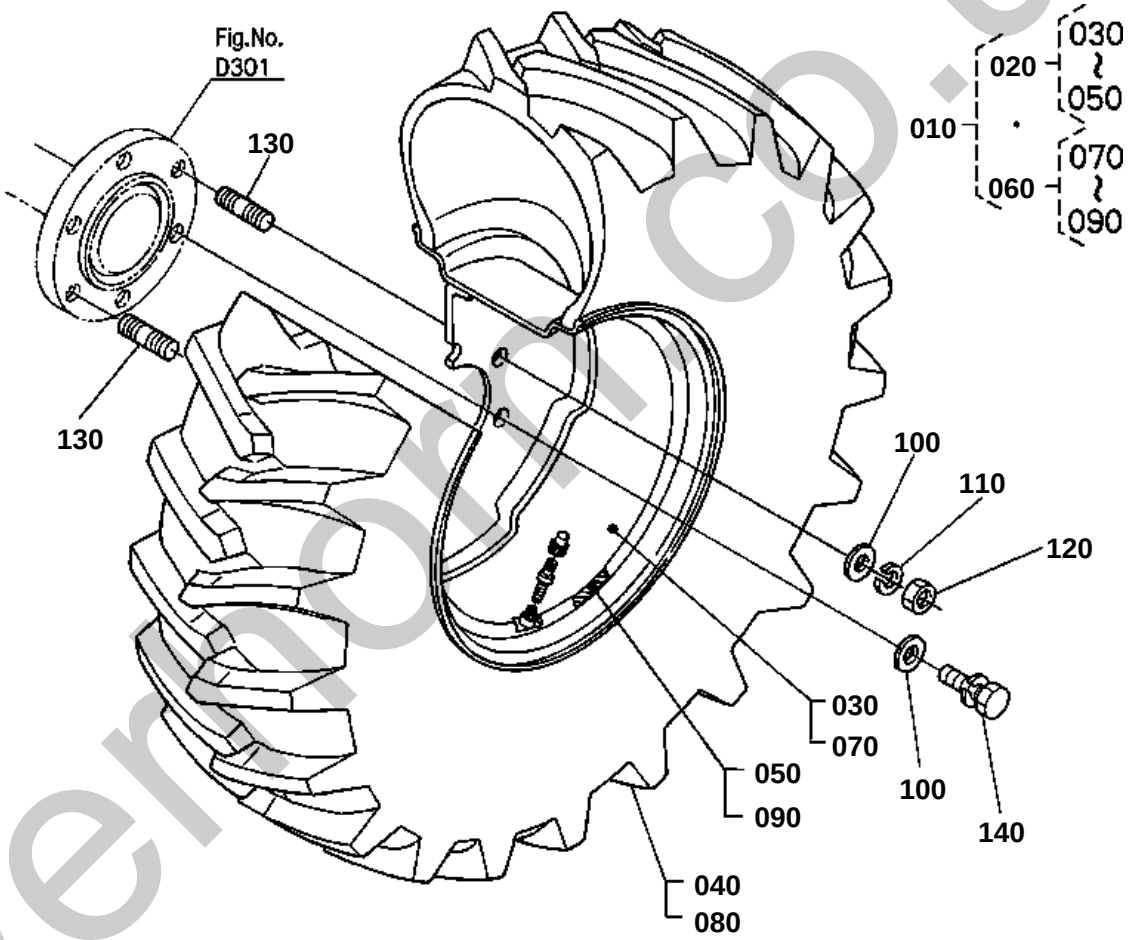

silvermoor.co.uk

↔ Interchangeable; ≠ not interchangeable; ← new for old; → old for new

REF.No	Part No.	Description	Q'ty	S.No.	I/C	REMARKS	Weight (kgf)	Weight (lb)
010	66429-17610	ASSY TIRE	1				0	0
020	66429-17620	ASSY TIRE LH	1				0	0
030	32701-27950	WHEEL	1				0	0
040	66429-17650	TIRE	1				0	0
050	66429-17660	LABEL TIRE LH	1			NOT SALE	0	0
060	66429-17630	ASSY TIRE RH	1				0	0
070	32701-27950	WHEEL	1				0	0
080	66429-17650	TIRE	1				0	0
090	66429-17670	LABEL TIRE RH	1			NOT SALE	0	0
100	04013-60160	WASHER PLAIN	12				0.01	0.022
110	04512-60160	WASHER SPRING	4				0.01	0.022
120	02176-50160	NUT	4				0.021	0.0462
130	01517-51632	STUD	4				0.076	0.1672
140	01133-51635	BOLT	8				0.09	0.198

silverhorn.co.uk

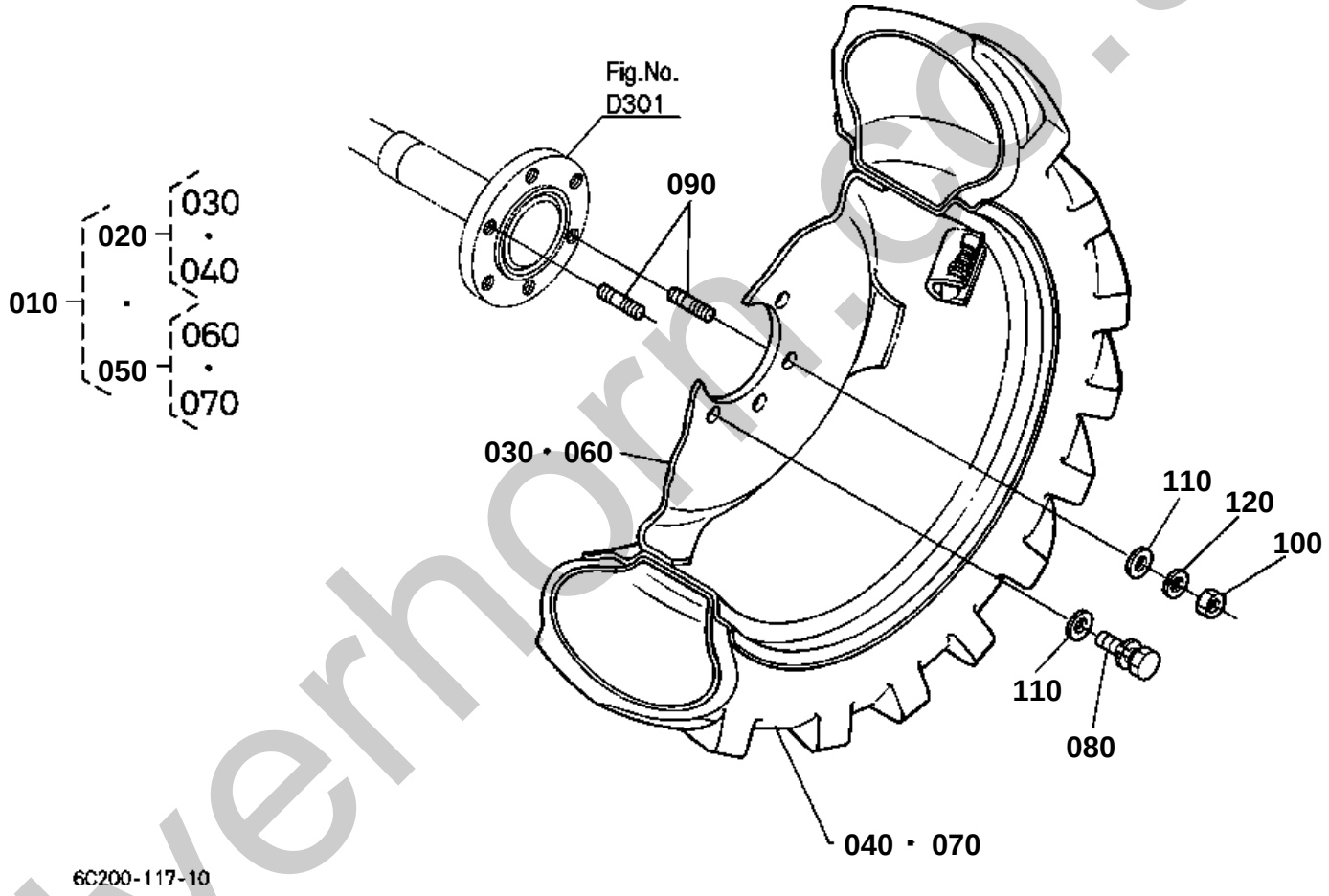

silverhorn.co.uk

↔ Interchangeable; ≠ not interchangeable; ← new for old; → old for new

REF.No	Part No.	Description	Q'ty	S.No.	I/C	REMARKS	Weight (kgf)	Weight (lb)
010	32701-50010	ASSY REAR WHEEL	1				0	0
020	32701-50110	ASSY TIRE LH	1				0	0
030	32701-27950	WHEEL	1				0	0
040	32701-50130	TIRE	1				15	33
050	32701-50210	ASSY TIRE RH	1				0	0
060	32701-27950	WHEEL	1				0	0
070	32701-50130	TIRE	1				15	33
080	01133-51635	BOLT	8				0.09	0.198
090	01517-51632	STUD	4				0.076	0.1672
100	02176-50160	NUT	4				0.021	0.0462
110	04013-60160	WASHER PLAIN	12				0.01	0.022
120	04512-60160	WASHER SPRING	4				0.01	0.022

silverhorn.co.uk

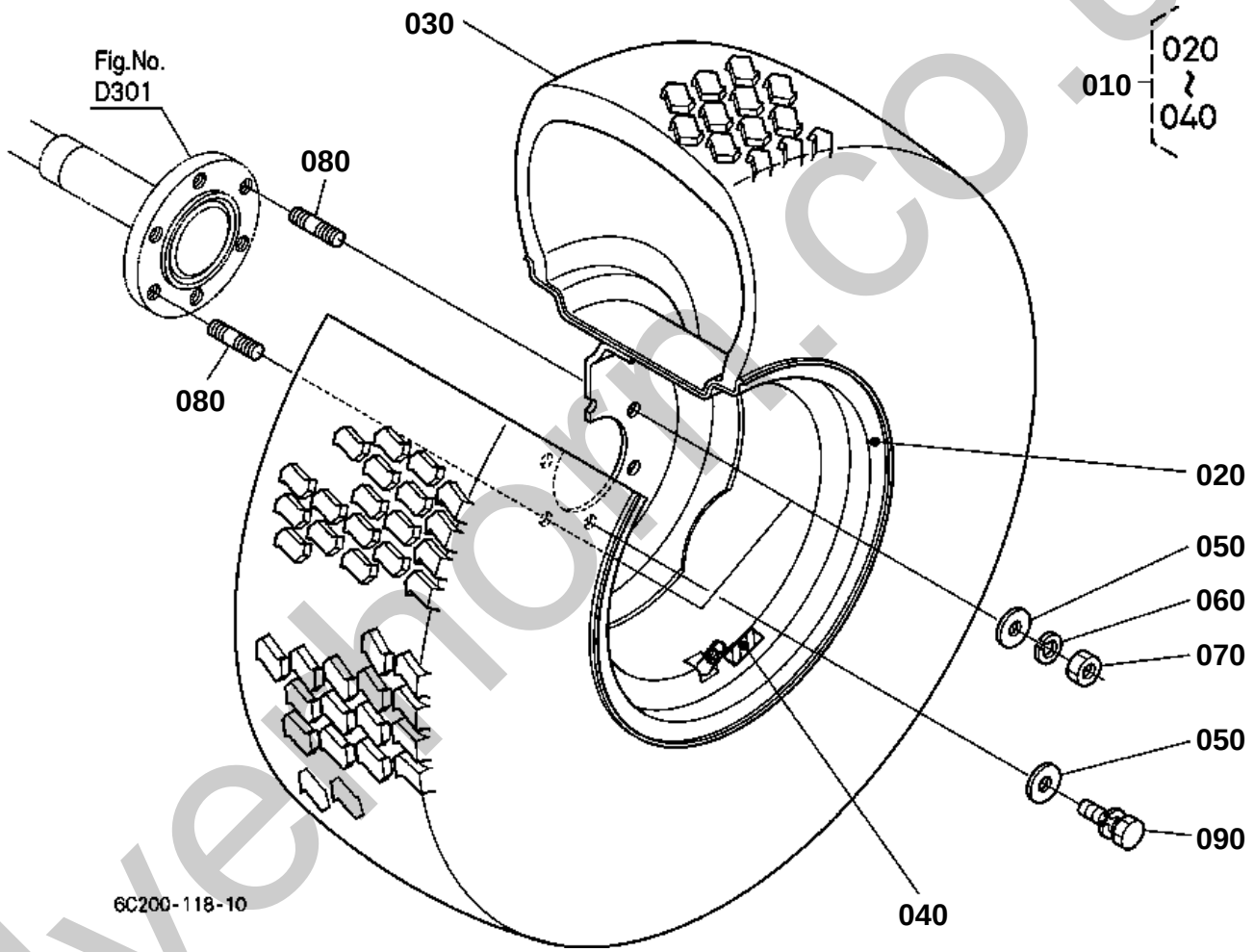

silverthorn.co.uk

↔ Interchangeable; ≠ not interchangeable; ← new for old; → old for new

REF.No	Part No.	Description	Q'ty	S.No.	I/C	REMARKS	Weight (kgf)	Weight (lb)
010	6C070-50320	ASSY TIRE	2				0	0
020	6C070-50330	WHEEL	2				0	0
030	6C070-50340	TIRE	2				0	0
040	6C070-50350	LABEL TIRE	2			NOT SALE	0	0
050	04013-60160	WASHER PLAIN	12				0.01	0.022
060	04512-60160	WASHER SPRING	4				0.01	0.022
070	02176-50160	NUT	4				0.021	0.0462
080	01517-51632	STUD	4				0.076	0.1672
090	01133-51635	BOLT	8				0.09	0.198

silverhorn.co.uk

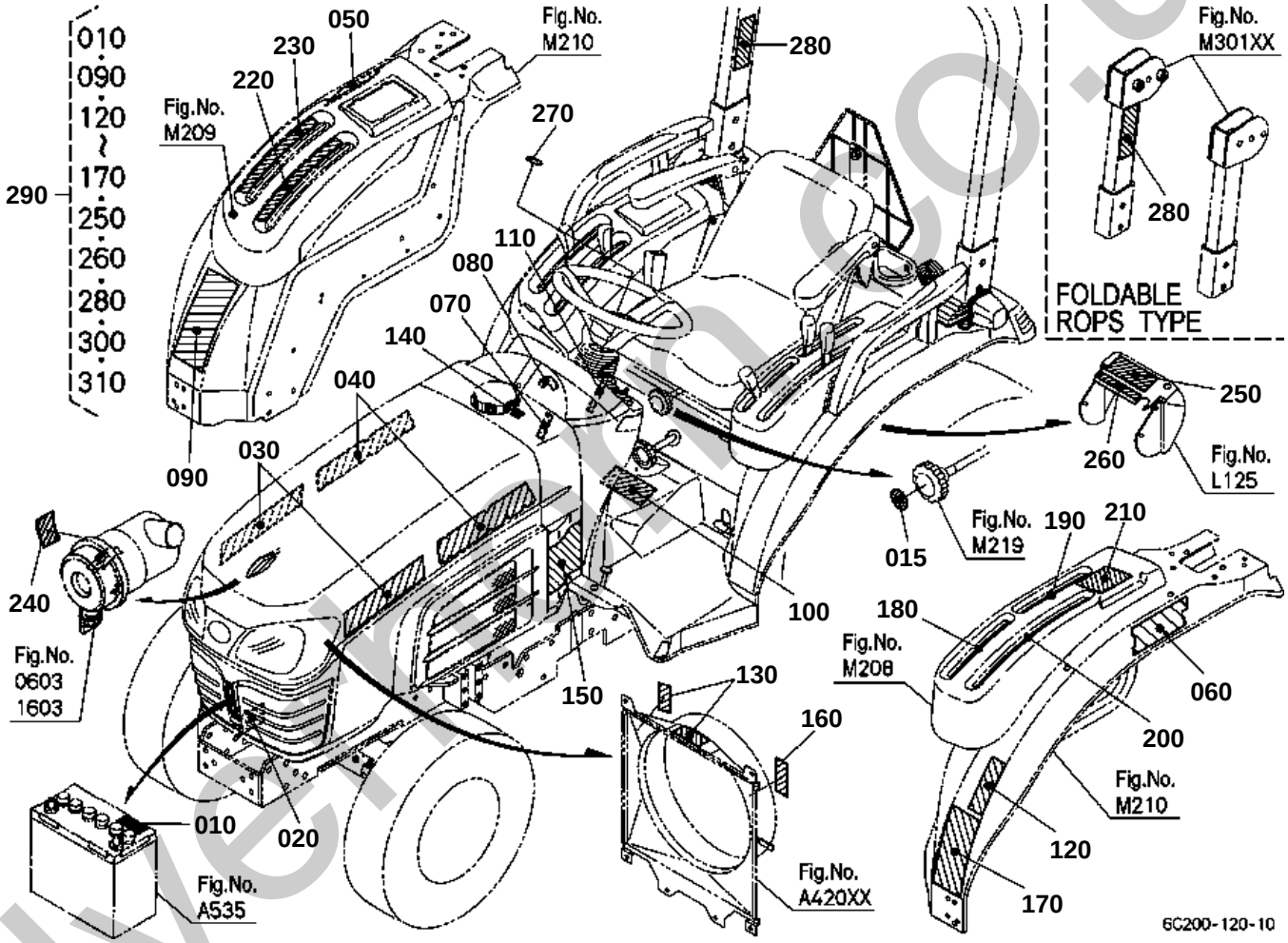

silverhand.co.uk

↔ Interchangeable; ≠ not interchangeable; ← new for old; → old for new

REF.No	Part No.	Description	Q'ty	S.No.	I/C	REMARKS	Weight (kgf)	Weight (lb)
010	6C040-55590	LABEL BATTERY	1				0.001	0.0022
015	6C170-45980	LABEL ADJUSTER	1				0.001	0.0022
020	99999-99999	NAME PLATE	1				0	0
030	6C220-47250	MARK	2				0	0
040	TD060-80930	LABEL KUBOTA	2				0.007	0.0154
050	K2571-65250	LABEL 4WD	1				0.002	0.0044
060	6C200-47550	MARK HST	1				0	0
070	6C040-47512	LABEL PARKING	1				0.001	0.0022
080	6C070-47212	MARK MAIN SWITCH	1				0.001	0.0022
090	TA040-49320	LABEL ROPS WARNING	1			RIGID ROPS TYPE	0.001	0.0022
090	TA240-98480	LABEL ROPS WARNING	1			FOLDABLE ROPS TYPE	0.005	0.011
100	6C200-47480	LABEL PEDAL	1				0	0
110	6C042-47400	LABEL 4WD	1				0.001	0.0022
120	6C070-47422	LABEL SAFETY	1				0.005	0.011
130	32751-49580	LABEL FAN BELT	2				0.001	0.0022
140	6C040-47412	LABEL FILLER CAUTION	1				0.001	0.0022
150	6C090-49650	LABEL START CAUTION	1				0.005	0.011
160	TA040-49580	LABEL MUFFLER	1				0.001	0.0022
170	6C150-47430	LABEL PARKING	1				0.002	0.0044
180	6C200-47470	LABEL	1				0	0
190	6C200-47380	LABEL PTO	1				0	0
200	6C200-47440	LABEL RANGE SHIFT	1				0	0
210	6C200-47330	LABEL	1				0	0
220	6C200-47340	LABEL CRUISE CONTROL	1				0	0
230	6C200-47350	LABEL POSITION	1				0	0
240	32721-58282	LABEL CAUTION	1				0.001	0.0022
250	TA040-49593	LABEL PTO WARNING	1				0.001	0.0022
260	6C140-47440	LABEL DRAWBAR	1				0.001	0.0022
270	6C200-41440	MARK STEERING WHEEL	1				0	0
280	6C140-47460	LABEL ROPS WARNING	1			RIGID ROPS TYPE	0.001	0.0022
280	3A111-95540	LABEL ROPS CAUTION	1			FOLDABLE ROPS TYPE	0.003	0.0066
290	6C200-47400	KIT LABEL SAFETY	1				0	0
300	TA040-49020	LABEL CAB WARNING	1			OUT OF USE	0.002	0.0044
310	6C230-47430	LABEL PARKING	1			OUT OF USE	0	0

silverfarm.co.uk

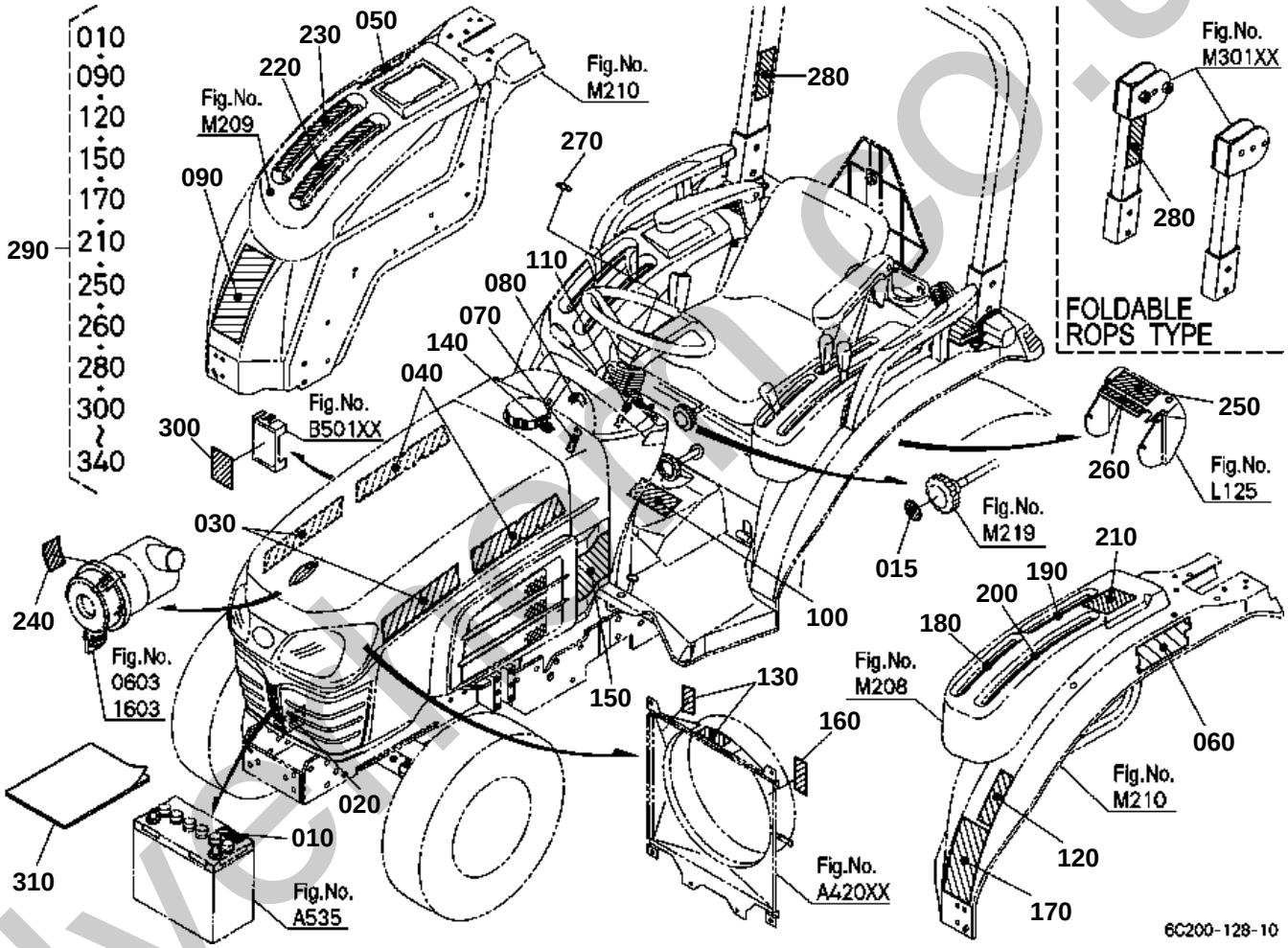

silverhall.co.uk

↔ Interchangeable; ≠ not interchangeable; ← new for old; → old for new

REF.No	Part No.	Description	Q'ty	S.No.	I/C	REMARKS	Weight (kgf)	Weight (lb)
010	6C021-92120	LABEL BATTERY	1				0.001	0.0022
015	6C170-45980	LABEL ADJUSTER	1				0.001	0.0022
020	99999-99999	NAME PLATE	1				0	0
030	6C220-47250	MARK	2				0	0
040	TD060-80930	LABEL KUBOTA	2				0.007	0.0154
050	K2571-65250	LABEL 4WD	1				0.002	0.0044
060	6C200-47550	MARK HST	1				0	0
070	6C040-47512	LABEL PARKING	1				0.001	0.0022
080	6C070-47212	MARK MAIN SWITCH	1				0.001	0.0022
090	TA040-49150	LABEL ROPS WARNING	1			RIGID ROPS TYPE	0.003	0.0066
090	3A112-98480	LABEL ROPS WARNING	1			FOLDABLE ROPS TYPE	0.004	0.0088
100	6C200-47480	LABEL PEDAL	1				0	0
110	6C042-47400	LABEL 4WD	1				0.001	0.0022
120	6C071-47422	LABEL SAFETY	1				0.005	0.011
130	32751-49580	LABEL FAN BELT	2				0.001	0.0022
140	6C040-47412	LABEL FILLER CAUTION	1				0.001	0.0022
150	6C091-49650	LABEL START CAUTION	1				0.01	0.022
160	TA040-49580	LABEL MUFFLER	1				0.001	0.0022
170	6C151-47430	LABEL PARKING WARNIN	1				0.002	0.0044
180	6C200-47470	LABEL	1				0	0
190	6C200-47380	LABEL PTO	1				0	0
200	6C200-47440	LABEL RANGE SHIFT	1				0	0
210	6C201-47330	LABEL	1				0	0
220	6C200-47340	LABEL CRUISE CONTROL	1				0	0
230	6C200-47350	LABEL POSITION	1				0	0
240	32721-58282	LABEL CAUTION	1				0.001	0.0022
250	TA041-49590	LABEL PTO WARNING	1				0.001	0.0022
260	6C141-47440	LABEL DRAWBAR	1				0.001	0.0022
270	6C200-41440	MARK STEERING WHEEL	1				0	0
280	6C141-47460	LABEL ROPS WARNING	1			RIGID ROPS TYPE	0.001	0.0022
280	3A112-95540	LABEL ROPS CAUTION	1			FOLDABLE ROPS TYPE	0.003	0.0066
290	6C201-92100	KIT LABEL	1				0	0
300	6C201-92110	LABEL FUSE	1				0	0
310	6C201-92050	OPERATOR'S MANUAL	1				0	0
320	TA043-49020	LABEL CAB WARNING	1			OUT OF USE	0.005	0.011
330	6C231-92110	LABEL FUSE	1			OUT OF USE	0	0
335	6C231-47430	LABEL PARKING WARNIN	1			OUT OF USE	0	0
340	6C231-92050	OPERATOR'S MANUAL	1			OUT OF USE	0	0

silvermorn.co.uk

ACCESSORIES AND SERVICE PARTS
ACCESSOIRES ET PIECES DE SERVICE
SONTIGES ZUBEHOER UND SERVICE-TEILE

TITLE-001-10

silverhorn.co.uk

↔ Interchangeable; ≠ not interchangeable; ← new for old; → old for new

REF.No	Part No.	Description	Q'ty	S.No.	I/C	REMARKS	Weight (kgf)	Weight (lb)
010	1G511-89814	STATEMENT WARRANTY	1				0.01	0.022
020	6C200-63110	OPERATOR'S MANUAL	1			ENGLISH	0	0
020	6C201-92050	OPERATOR'S MANUAL	1			FRENCH	0	0
030	15241-86612	WRENCH FILTER	1				0.115	0.253
040	1G111-65720	FUSE	1			30A	0.009	0.0198
050	04013-60120	WASHER PLAIN	12			FOR FRONT WHEEL	0.01	0.022
060	04512-60120	WASHER SPRING	12			FOR FRONT WHEEL	0.005	0.011
070	02176-50120	NUT	12			FOR FRONT WHEEL	0.01	0.022
080	04013-60160	WASHER PLAIN	12			FOR REAR WHEEL	0.01	0.022
090	04512-60160	WASHER SPRING	4			FOR REAR WHEEL	0.01	0.022
100	02176-50160	NUT	4			FOR REAR WHEEL	0.021	0.0462
110	01517-51632	STUD	4			FOR REAR WHEEL	0.076	0.1672
120	01133-51635	BOLT	8			FOR REAR WHEEL	0.09	0.198

silverhorn.co.uk

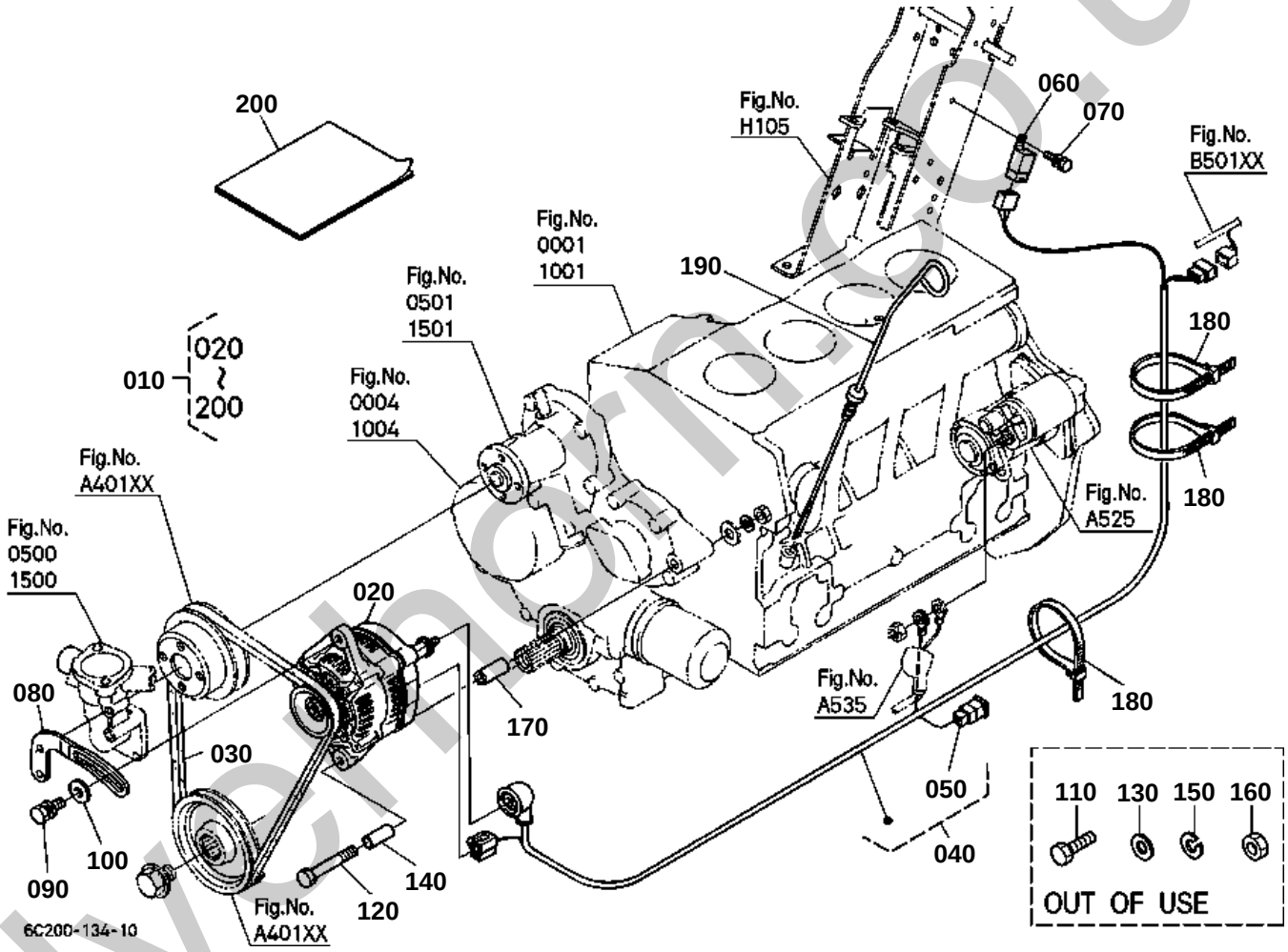

silvermorris.co.uk

ALTERNATOR KIT [OPTION]

↔ Interchangeable; ≠ not interchangeable; ← new for old; → old for new

REF.No	Part No.	Description	Q'ty	S.No.	I/C	REMARKS	Weight (kgf)	Weight (lb)
010	6C070-95302	KIT ALTERNATOR	1			NOT SALE	0	0
020	16241-64012	ASSY ALTERNATOR	1				3	6.6
030	14911-97010	V BELT	1				0.084	0.1848
040	6C070-95310	ASSY WIRE HARNESS	1				0.12	0.264
050	17478-60080	FUSE	1			50A	0.008	0.0176
060	68881-53540	COMP.RELAY	1				0.04	0.088
070	01025-50620	BOLT	1				0.02	0.044
080	16241-64420	STAY DYNAMO	1				0.095	0.209
090	01123-50825	BOLT	1				0.013	0.0286
100	04015-60080	WASHER PLAIN	1				0.01	0.022
110	01173-51085	BOLT	1			OUT OF USE	0.051	0.1122
120	01153-50885	BOLT	1				0.031	0.0682
130	04011-50100	WASHER PLAIN	1			OUT OF USE	0.002	0.0044
140	6C070-95320	COLLAR ALTERNATOR	1				0	0
150	04512-60100	WASHER SPRING	1			OUT OF USE	0.002	0.0044
160	02176-50100	NUT	1			OUT OF USE	0.005	0.011
170	6C040-95330	COLLAR ALTERNATOR	1				0.031	0.0682
180	53581-64150	BAND CORD	3				0.002	0.0044
190	16224-36410	GAUGE OIL	1				0.057	0.1254
200	6C070-95342	MANUAL ALTERNATOR K.	1				0.025	0.055

silverhorn.co.uk

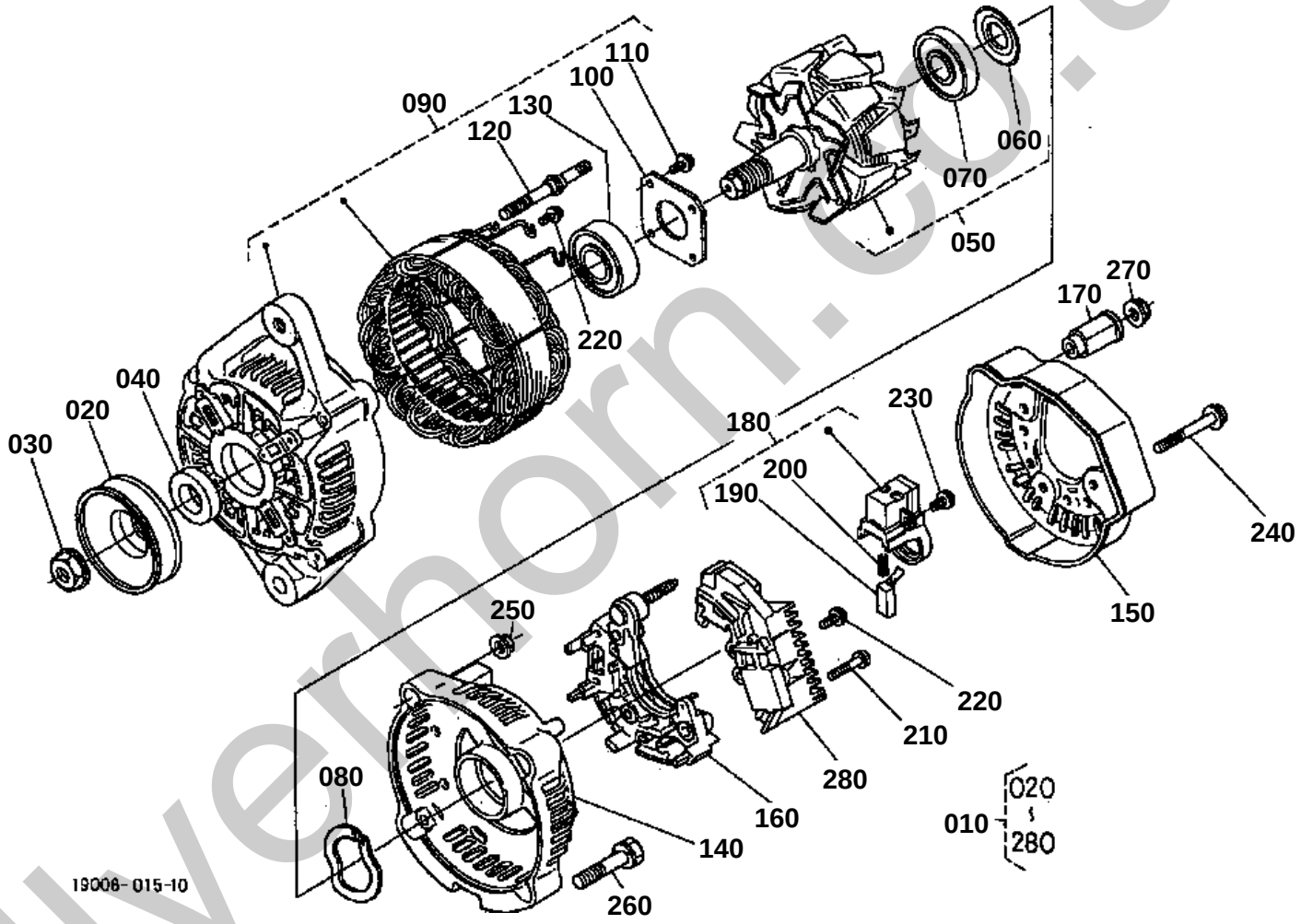

silverhorn.co.uk

ALTERNATOR [COMPONENT PARTS] [OPTION]

↔ Interchangeable; ≠ not interchangeable; ← new for old; → old for new

REF.No	Part No.	Description	Q'ty	S.No.	I/C	REMARKS	Weight (kgf)	Weight (lb)
010	16241-64012	ASSY ALTERNATOR	1				3	6.6
020	15881-64110	PULLEY DYNAMO	1				0.16	0.352
030	15881-92010	NUT	1				0.02	0.044
040	15881-64150	COLLAR	1				0.004	0.0088
050	66436-64040	ROTOR	1				1.2	2.64
060	15881-64800	COVER BEARING	1				0.001	0.0022
070	16652-64770	BEARING BALL	1				0.045	0.099
080	15881-64810	WASHER THRUST	1				0.002	0.0044
090	66436-64020	FRAME DRIVE END	1				1.11	2.442
100	15881-64710	PLATE RETAINER	1				0.01	0.022
110	15881-93010	SCREW ROUND HEAD	4				0.003	0.0066
120	15881-64260	BOLT THROUGH	2				0.01	0.022
130	16652-64780	BEARING BALL	1				0.05	0.11
140	16231-64060	FRAME END	1				0.17	0.374
150	16231-64230	COVER END	1				0.035	0.077
160	16231-64850	ASSY RECTIFIER	1				0.18	0.396
170	16241-64900	BUSH INSULATION	1				0.007	0.0154
180	16652-64310	HOLDER BRUSH	1				0.025	0.055
190	15881-64090	BRUSH	2				0.002	0.0044
200	15881-64330	SPRING BRUSH	2				0.002	0.0044
210	15881-93020	SCREW ROUND HEAD	2				0.005	0.011
220	15881-93030	SCREW ROUND HEAD	6				0.003	0.0066
230	15881-93040	SCREW ROUND HEAD	1				0.003	0.0066
240	15881-91040	BOLT	3				0.005	0.011
250	15881-92020	NUT	2				0.02	0.044
260	15881-91050	BOLT	2				0.01	0.022
270	14182-92030	NUT	1				0.003	0.0066
280	1K531-64602	ASSY REGULATOR	1				0.08	0.176

silverhorn.co.uk

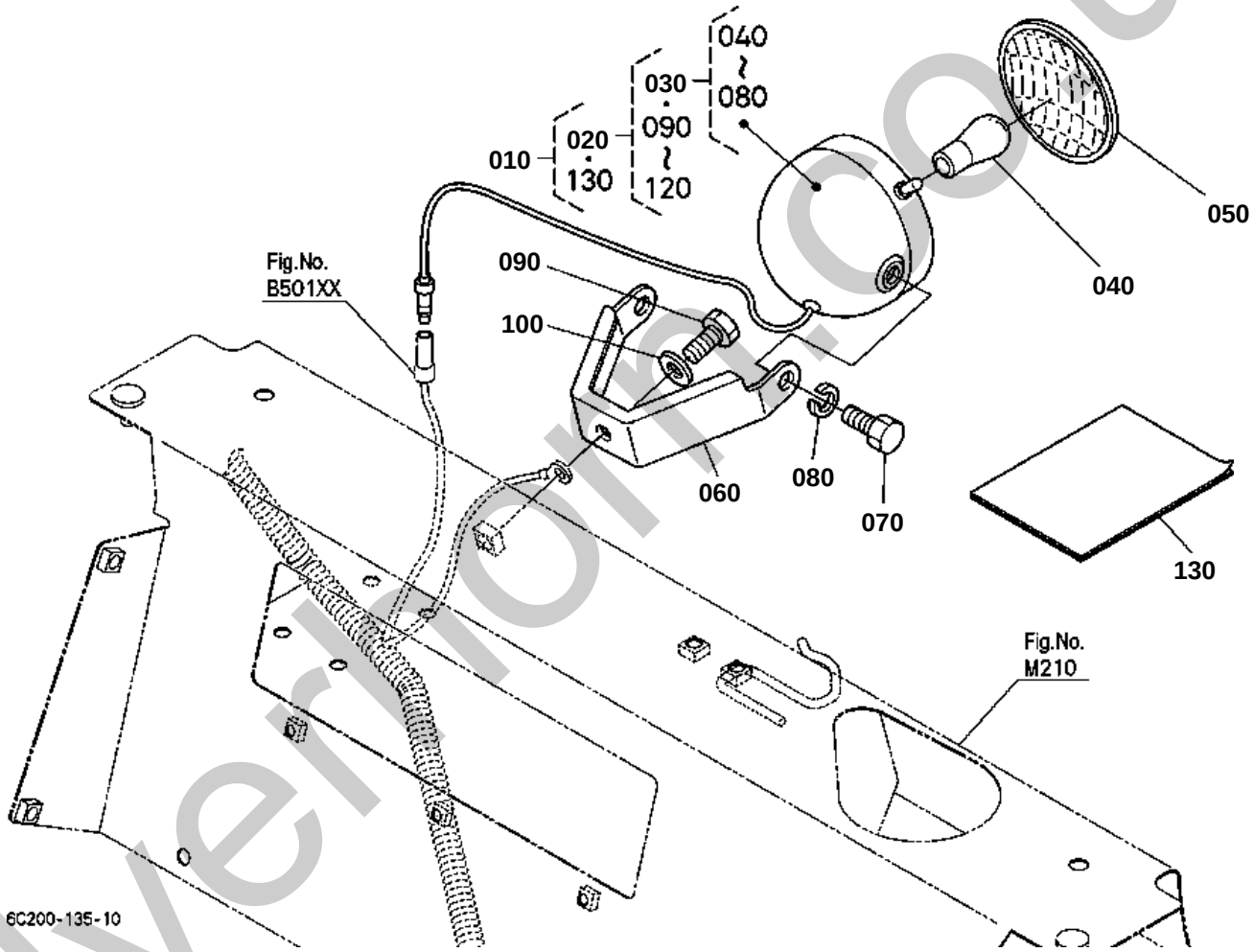

silverhorn.co.uk

WORKING LIGHT KIT [OPTION]

↔ Interchangeable; ≠ not interchangeable; ← new for old; → old for new

REF.No	Part No.	Description	Q'ty	S.No.	I/C	REMARKS	Weight (kgf)	Weight (lb)
010	6C040-95503	KIT LIGHT WORKING	1				0.86	1.892
020	35871-97600	ASSY LIGHT WORKING	1				0.88	1.936
030	35871-75900	ASSY LIGHT WORKING	1				0.85	1.87
040	68331-53360	BULB	1			35W	0.015	0.033
050	68331-53310	LENS	1				0.15	0.33
060	35861-75910	STAY WORKING LAMP 4	1				0.25	0.55
070	01153-50820	BOLT	2				0.012	0.0264
080	04512-60080	WASHER SPRING	2				0.002	0.0044
090	01173-51020	BOLT	1				0.017	0.0374
100	04013-60100	WASHER PLAIN	1				0.003	0.0066
110	04512-60100	WASHER SPRING	1			OUT OF USE	0.002	0.0044
120	02118-50100	NUT	1			OUT OF USE	0.005	0.011
130	99999-99999	MANUAL ASSEMBLY	1				0	0
140	6C040-95530	STAY WORKING LIGHT	1			OUT OF USE	0.44	0.968
150	01123-50820	BOLT	1			OUT OF USE	0.011	0.0242
160	02114-50080	NUT	1			OUT OF USE	0.005	0.011

silverhorn.co.uk

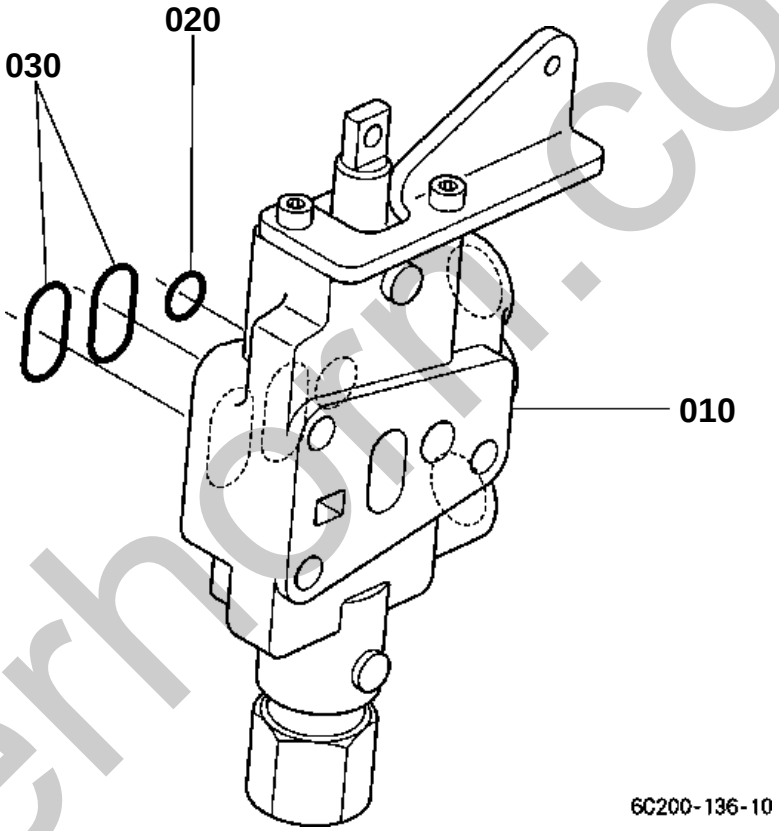

silverhorn.co.uk

AUXILIARY CONTROL VALVE [OPTION]

↔ Interchangeable; ≠ not interchangeable; ← new for old; → old for new

REF.No	Part No.	Description	Q'ty	S.No.	I/C	REMARKS	Weight (kgf)	Weight (lb)
010	6C200-93300	ASSY VALVE AUX.CON.	1				0	0
010	YW313-00100	ASSY VALVE AUX.CON.	1		↔		0	0
020	04817-00100	O RING	1				0.001	0.0022
030	04817-05200	O RING	2				0.001	0.0022

silverhorn.co.uk

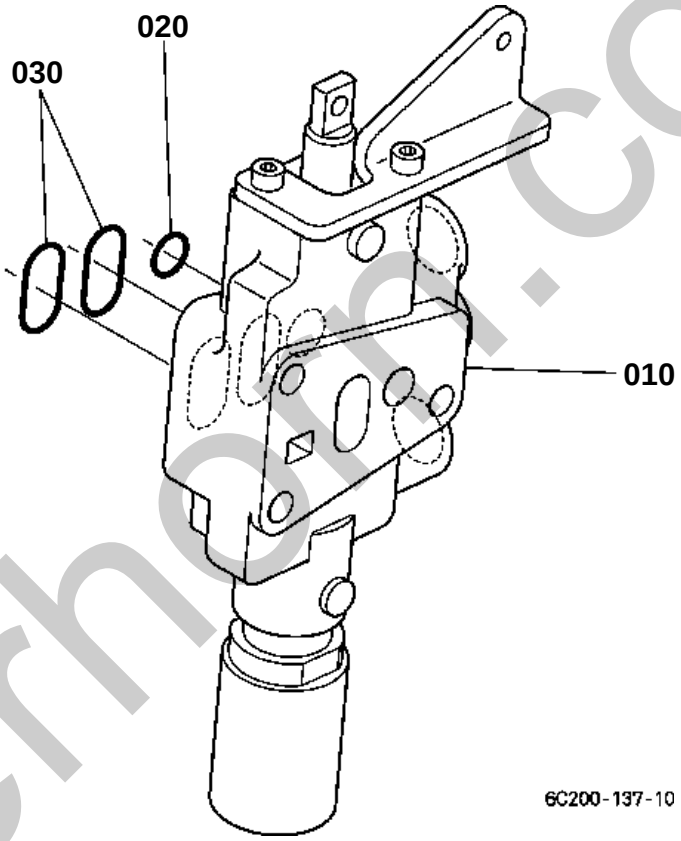

silverhorn.co.uk

AUXILIARY CONTROL VALVE (FLOATING) [OPTION]

↔ Interchangeable; ≠ not interchangeable; ← new for old; → old for new

REF.No	Part No.	Description	Q'ty	S.No.	I/C	REMARKS	Weight (kgf)	Weight (lb)
010	6C200-93400	ASSY VALVE AUX.CON.	1				0	0
010	YW312-00100	ASSY VALVE AUX.CON.	1		↔		0	0
020	04817-00100	O RING	1				0.001	0.0022
030	04817-05200	O RING	2				0.001	0.0022

silverhorn.co.uk

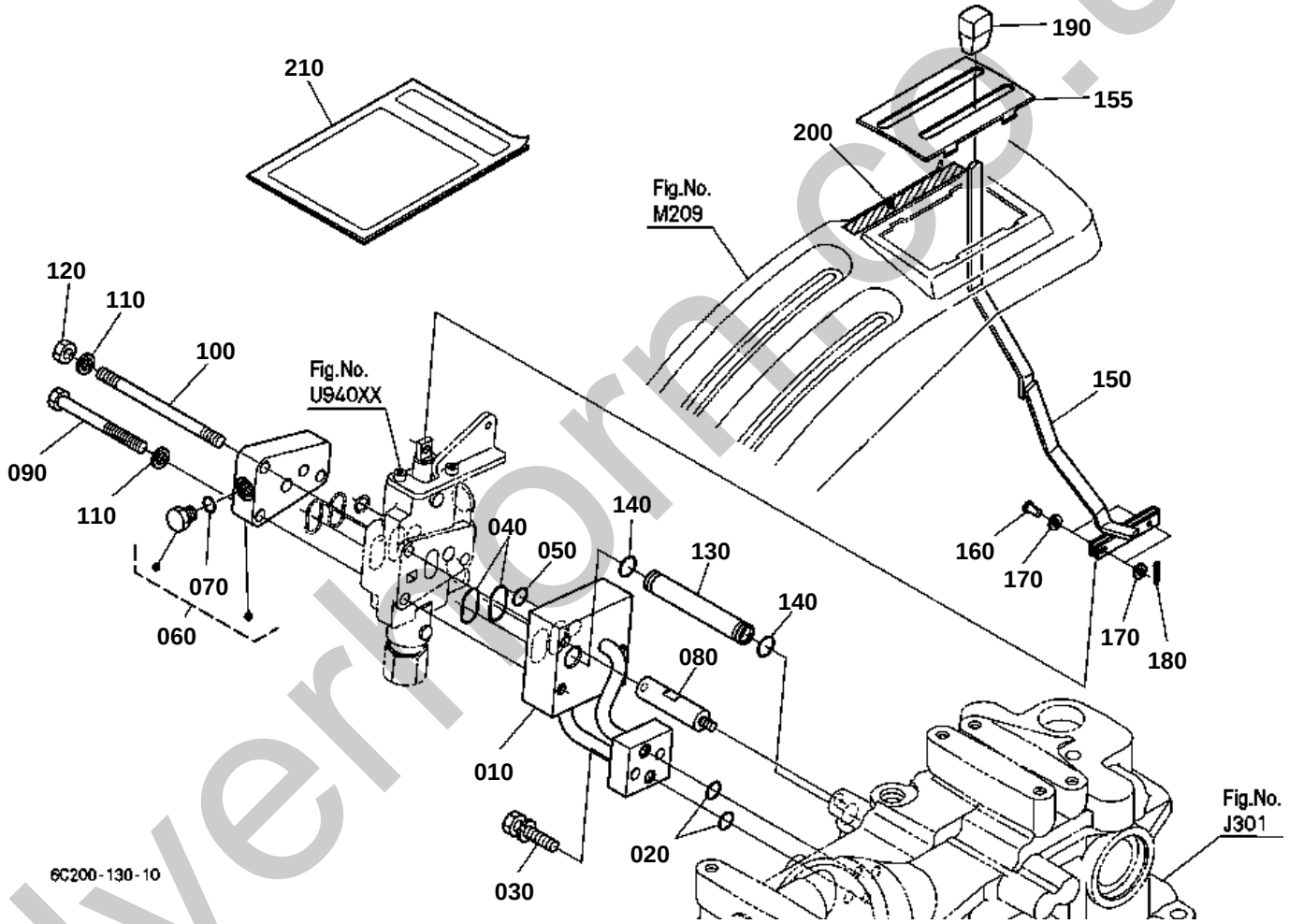

silverthorne.co.uk

AUXILIARY CONTROL VALVE LEVER (1ST) [OPTION]

↔ Interchangeable; ≠ not interchangeable; ← new for old; → old for new

REF.No	Part No.	Description	Q'ty	S.No.	I/C	REMARKS	Weight (kgf)	Weight (lb)
010	6C200-93200	BRACKET AUX.CON.VALV	1	<=50010			0	0
010	6C200-93202	BRACKET AUX.CON.VALV	1	>=50011	←		0	0
020	04817-00070	O RING	2				0.001	0.0022
030	01123-50830	BOLT	2				0.015	0.033
040	04817-05200	O RING	2				0.001	0.0022
050	04817-00100	O RING	1				0.001	0.0022
060	TD060-96122	COVER AUX.CON.VALVE	1				0.42	0.924
070	04817-00080	O RING	1				0.001	0.0022
080	6C200-93110	COLLAR	1	<=50010			0	0
080	6C200-93112	BOLT	1	>=50011	←		0	0
090	01153-50875	BOLT	2				0.028	0.0616
100	6C200-93130	STUD	1	<=50010			0	0
100	6C200-93132	STUD	1	>=50011	←		0	0
110	04512-60080	WASHER SPRING	3				0.002	0.0044
120	02114-50080	NUT	1				0.005	0.011
130	6C200-93120	PIPE RETURN	1				0	0
140	04817-00110	O RING	2				0.001	0.0022
150	6C200-93150	LEVER AUX.CON.VALVE	1	<=50010			0	0
150	6C200-93152	LEVER AUX.CON.VALVE	1	>=50011	←		0	0
155	6C200-93190	GUIDE AUX.CONTROL	1				0	0
160	68021-32790	PIN	2				0.004	0.0088
170	04012-50050	WASHER PLAIN	4				0.001	0.0022
180	05511-51210	PIN SPLIT	2				0.001	0.0022
190	TD060-96260	GRIP AUX.CONTR.LEVER	1				0.013	0.0286
200	TA040-49612	MARK AUX.CONT.VALVE	1				0.001	0.0022
210	99999-99999	MANUAL ASSEMBLY	1				0	0

silverhorn.co.uk

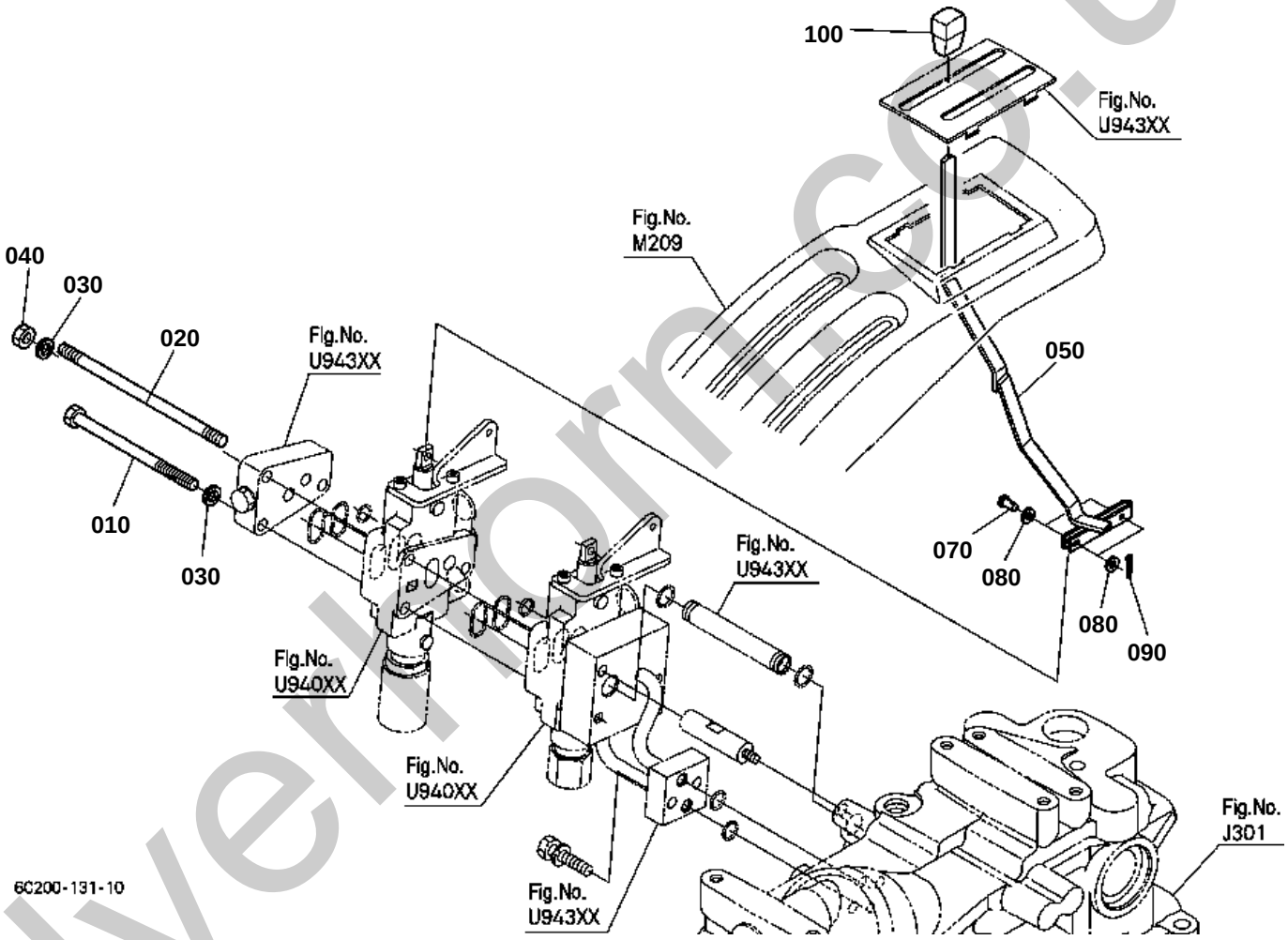

silverthorn.co.uk

AUXILIARY CONTROL VALVE LEVER (2ND) [OPTION]

↔ Interchangeable; ≠ not interchangeable; ← new for old; → old for new

REF.No	Part No.	Description	Q'ty	S.No.	I/C	REMARKS	Weight (kgf)	Weight (lb)
010	01153-50802	BOLT	2				0.04	0.088
020	6C200-93140	STUD	1	<=50010			0	0
020	6C200-93142	STUD	1	>=50011	←		0	0
030	04512-60080	WASHER SPRING	3				0.002	0.0044
040	02114-50080	NUT	1				0.005	0.011
050	6C200-93160	LEVER AUX.CON.VALVE	1	<=50010			0	0
050	6C200-93152	LEVER AUX.CON.VALVE	1	>=50011	←		0	0
060	99999-99999	BLANK	0				0	0
070	68021-32790	PIN	2				0.004	0.0088
080	04012-50050	WASHER PLAIN	4				0.001	0.0022
090	05511-51210	PIN SPLIT	2				0.001	0.0022
100	TD060-96260	GRIP AUX.CONTR.LEVER	1				0.013	0.0286

silverhorn.co.uk

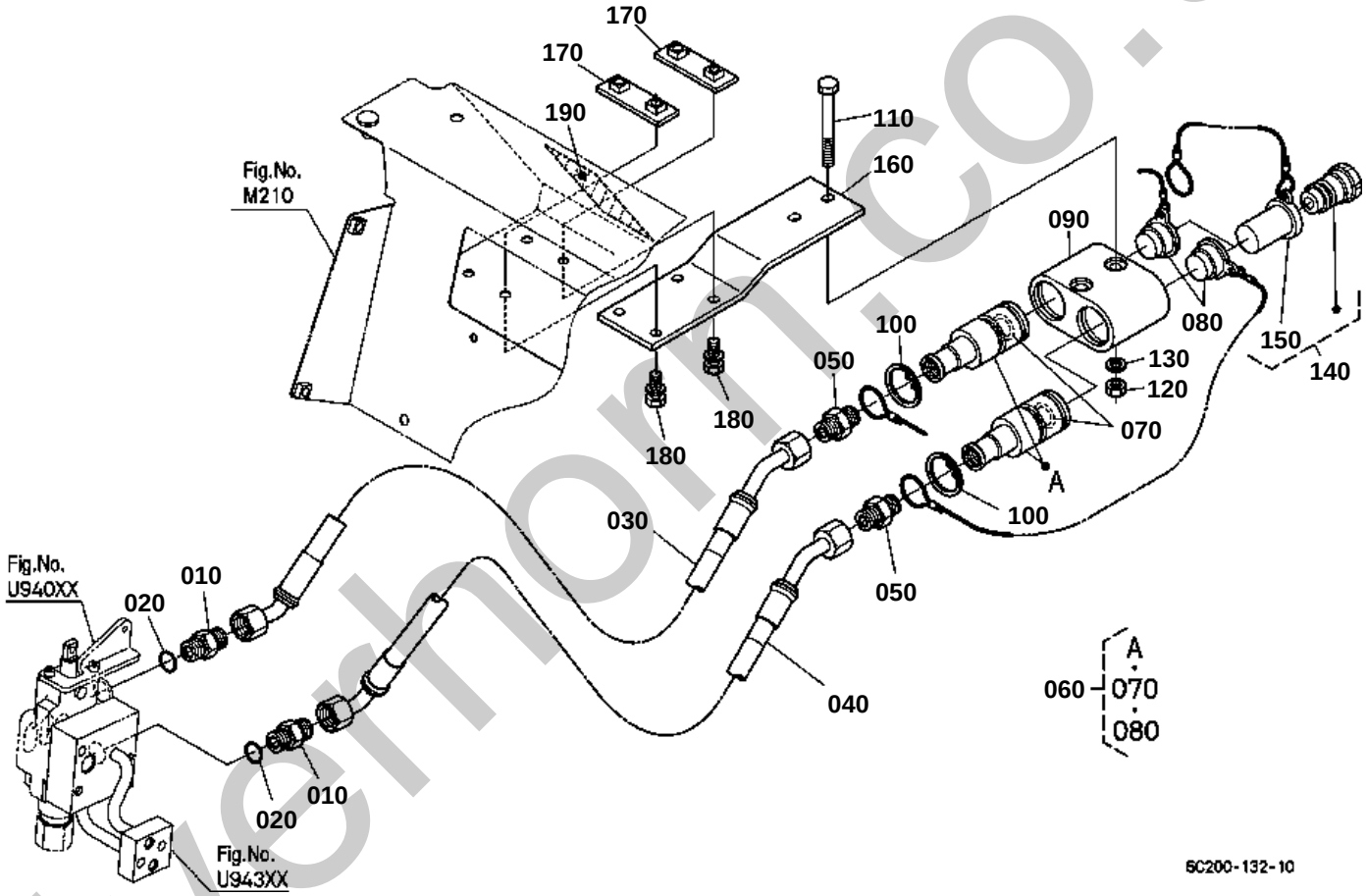

silverhorn.co.uk

AUXILIARY CONTROL VALVE COUPLER (1ST) [OPTION]

↔ Interchangeable; ≠ not interchangeable; ← new for old; → old for new

REF.No	Part No.	Description	Q'ty	S.No.	I/C	REMARKS	Weight (kgf)	Weight (lb)
010	70726-61130	ADAPTER	2				0.055	0.121
020	04817-00140	O RING	2				0.001	0.0022
030	6C200-93250	HOSE AUX.CONT.VALVE	1				0	0
040	6C200-93260	HOSE AUX.CONT.VALVE	1				0	0
050	99063-93410	ADAPTER	2				0.07	0.154
060	35861-82032	ASSY COUPLER FEMALE	2				0.32	0.704
070	35861-94510	O RING	2				0.002	0.0044
080	35861-94520	PLUG COUPLER	2				0.005	0.011
090	35893-82610	SUPPORT COUPLER	1				0.73	1.606
100	04611-00380	CIR CLIP INTERNAL	2				0.004	0.0088
110	01153-50865	BOLT	2				0.025	0.055
120	02156-50080	NUT	2				0.004	0.0088
130	04512-60080	WASHER SPRING	2				0.002	0.0044
140	35861-82190	ASSY COUPLER MALE	2				0.086	0.1892
150	35861-94530	CAP	2				0.007	0.0154
160	6C200-93170	STAY COUPLER	1	<=50010			0	0
160	6C200-93172	STAY COUPLER	1	>=50011	←		0	0
170	TA040-96490	STAY COUPLER	2				0.073	0.1606
180	01123-50820	BOLT	4				0.011	0.0242
190	TA040-49670	MARK COUPLER	1				0.001	0.0022

silverhorn.co.uk

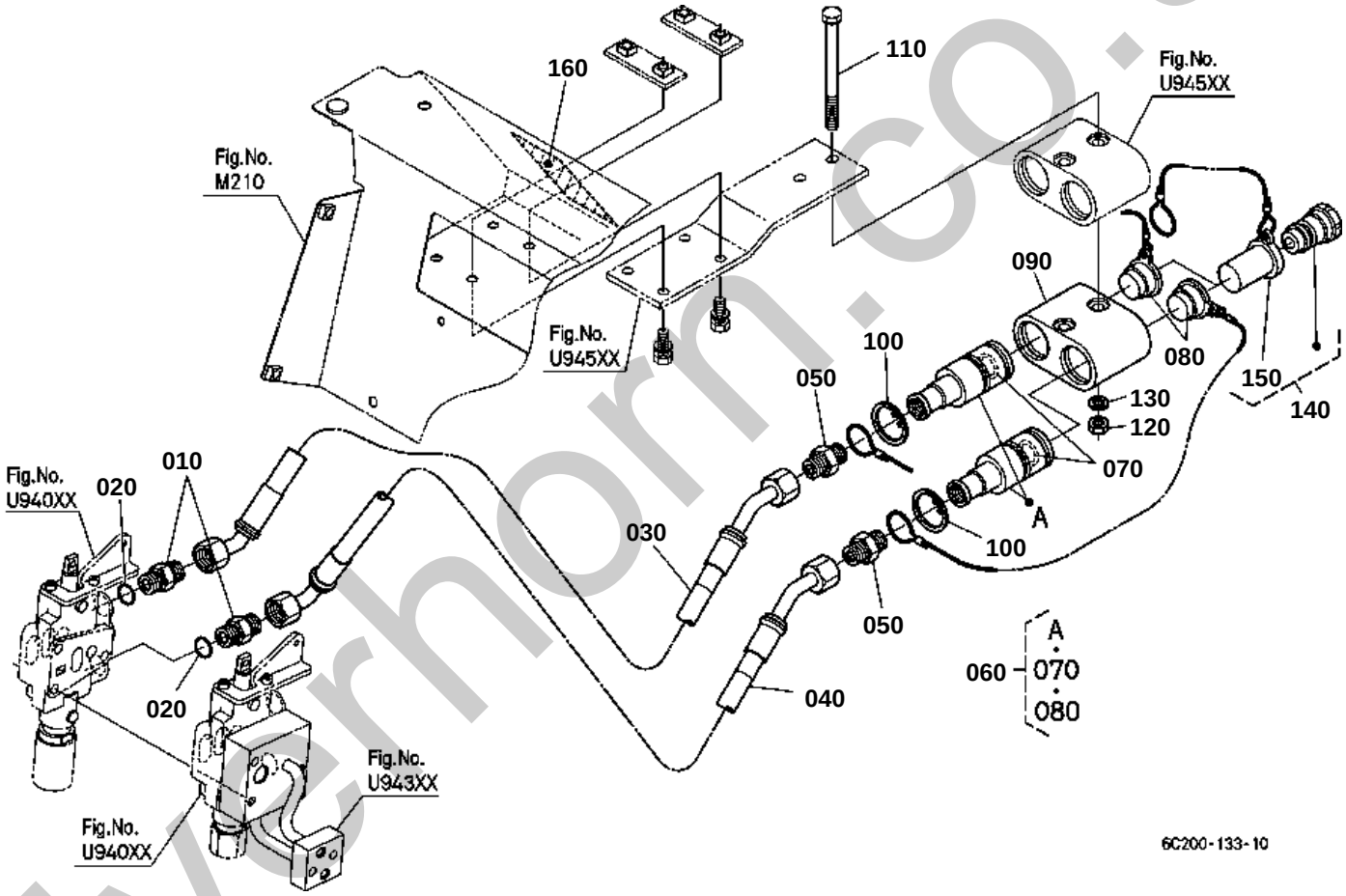

silverhorn.co.uk

AUXILIARY CONTROL VALVE COUPLER (2ND) [OPTION]

↔ Interchangeable; ≠ not interchangeable; ← new for old; → old for new

REF.No	Part No.	Description	Q'ty	S.No.	I/C	REMARKS	Weight (kgf)	Weight (lb)
010	70726-61130	ADAPTER	2				0.055	0.121
020	04817-00140	O RING	2				0.001	0.0022
030	6C200-93270	HOSE AUX.CONT.VALVE	1				0	0
040	6C200-93280	HOSE AUX.CONT.VALVE	1				0	0
050	99063-93410	ADAPTER	2				0.07	0.154
060	35861-82032	ASSY COUPLER FEMALE	2				0.32	0.704
070	35861-94510	O RING	2				0.002	0.0044
080	35861-94520	PLUG COUPLER	2				0.005	0.011
090	35893-82610	SUPPORT COUPLER	1				0.73	1.606
100	04611-00380	CIR CLIP INTERNAL	2				0.004	0.0088
110	01153-50802	BOLT	2				0.04	0.088
120	02156-50080	NUT	2				0.004	0.0088
130	04512-60080	WASHER SPRING	2				0.002	0.0044
140	35861-82190	ASSY COUPLER MALE	2				0.086	0.1892
150	35861-94530	CAP	2				0.007	0.0154
160	TA040-49620	MARK COUPLER	1				0.001	0.0022

silverhorn.co.uk