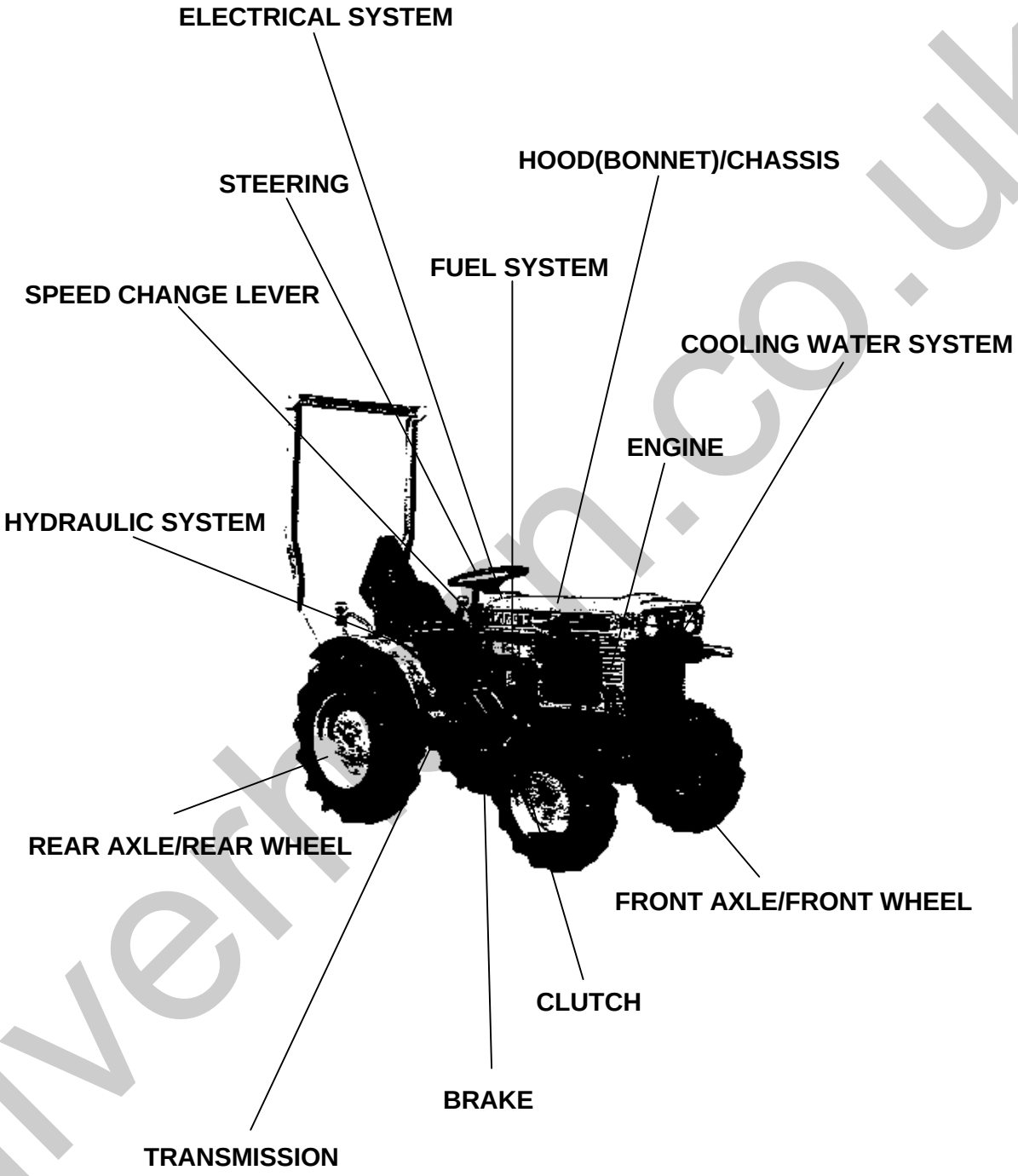

LABELS

ACCESSORIES

silverhill.co.uk

Item	Part No.	Description	Book
ENGINE	01T001	CRANKCASE GROUP	100K0036
	01T002	CYLINDER HEAD GROUP	100K0036
	01T003	GEAR CASE GROUP	100K0036
	01T004	BEARING CASE GROUP	100K0036
	01T005	BREATHER GROUP	100K0036
	01T006	INLET MANIFOLD GROUP	100K0036
	01T007	VALVE ROCKER ARM GROUP	100K0036
	01T008	HEAD COVER GROUP	100K0036
	01T009	CAMSHAFT GROUP	100K0036
	01T010	PISTON CRANK SHAFT GROUP	100K0036
	01T011	FLYWHEEL GROUP	100K0036
	01T012	NOZZLE HOLDER GROUP	100K0036
	01T013	INJECTION PUMP GROUP	100K0036
	01T014	SPEED CONTROL PLATE GROUP	100K0036
	01T015	GOVERNOR GROUP	100K0036
	01T016	DYNAMO GROUP	100K0036
	01T017	CLUTCH GROUP	100K0036
	01T018	NAME PLATE GROUP	100K0036
	01T019	NOZZLE HOLDER GROUP	100K0036
	01T020	INJECTION PUMP GROUP	100K0036
	01T021	DYNAMO GROUP	100K0036
	01T022	STARTER GROUP	100K0036
	01T023	OIL PRESSURE PUMP GROUP	100K0036
TRANSMISSION	01T024	TRANSMISSION CASE GROUP	100K0036
	01T025	CASE COVER GROUP	100K0036
	01T026	AXLE CASE GROUP	100K0036
REAR AXLE/REAR WHEEL	01T02701	REAR WHEEL GROUP	100K0036
CLUTCH	01T028	CLUTCH ROD GROUP	100K0036
REAR AXLE/REAR WHEEL	01T029	1ST SHAFT 4TH SHAFT GROUP	100K0036
	01T030	2ND SHAFT REVERSE SHAFT GROUP	100K0036
	01T031	3RD 5TH PTO SHAFT GROUP	100K0036
	01T032	DIFFERENTIAL GROUP	100K0036
SPEED CHANGE LEVER	01T033	MAIN SPEED CHANGE GROUP	100K0036
	01T034	AUX.SPEED CHANGE GROUP	100K0036
FRONT AXLE/FRONT WHEEL	01T035	FRONT DRIVE GROUP	100K0036
BRAKE	01T036	BRAKE GROUP	100K0036
HYDRAULIC SYSTEM	01T037	OIL PRESSURE PIPE GROUP	100K0036
	01T038	CONTROL VALVE GROUP	100K0036
	01T039	OIL PRESSURE GROUP 1	100K0036
	01T040	OIL PRESSURE GROUP 2	100K0036
STEERING	01T041	STEERING GROUP	100K0036
BRAKE	01T042	BRAKE ROD GROUP	100K0036
ENGINE	01T043	ACCELERATOR PEDAL GROUP	100K0036
HOOD(BONNET)/CHASSIS	01T044	SEAT GROUP	100K0036
LABELS	01T045	NAME PLATE GROUP	100K0036
CLUTCH	01T046	CLUTCH HOUSING GROUP	100K0036
FRONT AXLE/FRONT WHEEL	01T047	FRONT WHEEL SUPPORT GROUP	100K0036
COOLING WATER SYSTEM	01T048	RADIATOR GROUP	100K0036
HOOD(BONNET)/CHASSIS	01T049	FENDER GROUP	100K0036
	01T050	BONNET GROUP	100K0036
ENGINE	01T051	MUFFLER GROUP	100K0036
FUEL SYSTEM	01T052	FUEL TANK GROUP	100K0036
ELECTRICAL SYSTEM	01T053	BATTERY GROUP	100K0036
	01T054	PANEL GROUP	100K0036
FRONT AXLE/FRONT WHEEL	01T055	FRONT AXLE CASE GROUP [B5100D-P]	100K0036
	01T056	FRONT WHEEL GEAR CASE GROUP [B5100D-P]	100K0036
STEERING	01T057	KNUCKLE ARM GROUP [B5100D-P]	100K0036

silverton.co.uk

Item	Part No.	Description	Book
FRONT AXLE/FRONT WHEEL	01T058	FRONT WHEEL GEAR CASE GROUP [B5100D-P]	100K0036
	01T059	FRONT WHEEL GROUP [B5100D-P FOR U.S.A.]	100K0036
	01T060	DRIVE SHAFT GROUP [B5100D-P]	100K0036
ENGINE	01T061	AIR CLEANER GROUP	100K0036
FUEL SYSTEM	01T062	FUEL FILTER GROUP	100K0036
HYDRAULIC SYSTEM	01T065	3-POINT LINKAGE GROUP [B5100D-P B5100E-P B5100E-PT]	100K0036
ACCESSORIES	01T066	ACCESSARY AND SERVICE PARTS GROUP	100K0036

silverhorn.co.uk

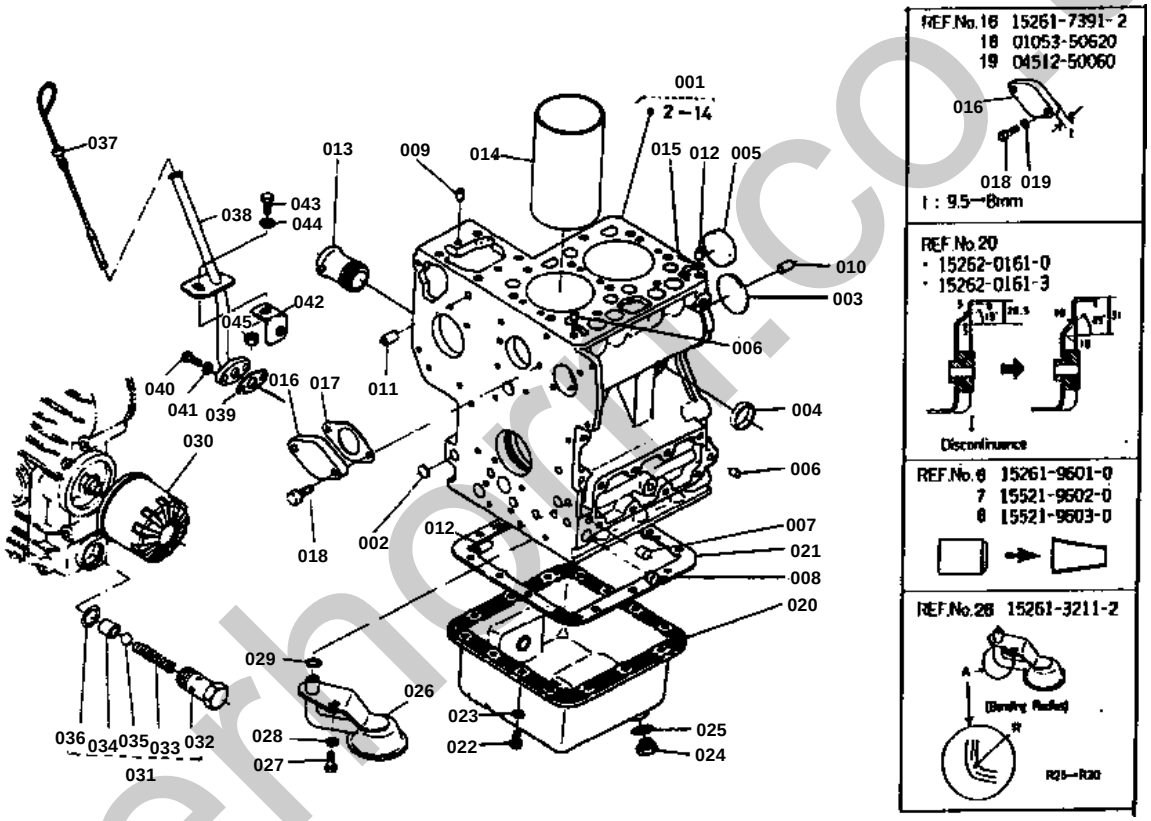

silverhorn.co.uk

Kubota **CRANKCASE GROUP**

↔ Interchangeable; ≠ not interchangeable; ← new for old; → old for new

REF.No	Part No.	Description	Q'ty	S.No.	I/C	REMARKS	Weight (kgf)	Weight (lb)
001	15261-01010	ASSY CRANKCASE	1			REF.No.002 TO 014	0	0
002	06311-75015	PLUG EXPANSION	3				0.002	0.0044
003	06311-75040	PLUG EXPANSION	1				0.02	0.044
004	15321-96260	CAP SEALING	3				0.014	0.0308
005	15221-03490	CAP SEALING	1				0.02	0.044
006	14301-33610	PLUG	5	<=123399			0.001	0.0022
006	15261-96010	PLUG	5	>=123400			0.002	0.0044
007	14301-33630	PLUG	3	<=123399			0.001	0.0022
007	15521-96020	PLUG	3	>=123400			0.003	0.0066
008	15221-33640	PLUG	1	<=123399			0.003	0.0066
008	15521-96030	PLUG	1	>=123400			0.007	0.0154
009	05012-00609	PIN STRAIGHT	2				0.003	0.0066
010	05012-00814	PIN STRAIGHT	2				0.006	0.0132
011	15221-33650	PIN PIPE	1				0.004	0.0088
012	15231-33960	PIN PIPE	2				0.001	0.0022
013	15261-72880	PIPE WATER	1				0.07	0.154
014	15261-02310	LINER CYLINDER	2				0.376	0.8272
015	15221-33700	O RING	1				0.001	0.0022
016	15261-73910	COVER WATER	1	<=2265			0.13	0.286
016	15261-73912	COVER WATER	1	>=1001			0	0
017	15261-73920	GASKET WATER COVER	1				0	0
018	01053-50620	BOLT	2	<=2265			0.006	0.0132
018	01023-50618	BOLT	2	>=10001			0.006	0.0132
019	04512-50060	WASHER SPRING	2				0	0
020	15262-01610	OIL PAN	1	<=1295			1.12	2.464
020	15262-01613	OIL PAN	1	>=1001			0	0
021	15261-01520	GASKET OIL PAN	1				0	0
022	15381-91090	BOLT	14				0	0
023	04512-50060	WASHER SPRING	14				0	0
024	15221-33750	PLUG	1				0.032	0.0704
025	15109-33660	GASKET	1				0.001	0.0022
026	15261-32110	FILTER OIL	1	<=1295			0.14	0.308
026	15261-32112	FILTER OIL	1	>=1001			0	0
027	01153-50816	BOLT	1				0.01	0.022
028	04512-50080	WASHER SPRING	1				0.001	0.0022
029	04810-00140	O RING	1				0.001	0.0022
030	15241-32090	ASSY CARTRIDGE OIL	1				0.35	0.77
031	15261-36070	ASSY VALVE RELIEF	1			REF.No.032 TO 036	0.078	0.1716
032	99999-99999	BLANK	0			ORDER BY REF.No.033	0	0
033	99999-99999	BLANK	0			ORDER BY REF.No.033	0	0
034	99999-99999	BLANK	0			ORDER BY REF.No.033	0	0
035	07715-03213	BALL	1				0.004	0.0088
036	04810-00150	O RING	1				0.001	0.0022
037	15261-36410	GAUGE OIL	1				0.031	0.0682
038	15262-36420	GUIDE OIL GAUGE	1				0.175	0.385
039	15261-36430	GASKET OIL GAUGE	1				0	0
040	01053-50618	BOLT	2				0.006	0.0132
041	04512-50060	WASHER SPRING	2				0	0
042	15262-36440	SUPPORT	1				0.036	0.0792
043	01153-50820	BOLT	1				0.012	0.0264
043	01150-50820	BOLT	1	>=10001			0.011	0.0242
044	04013-50080	WASHER PLAIN	1				0	0
045	02156-50080	NUT	1				0.004	0.0088
045	02114-50080	NUT	1	>=10001			0.005	0.011

silvermorn.co.uk

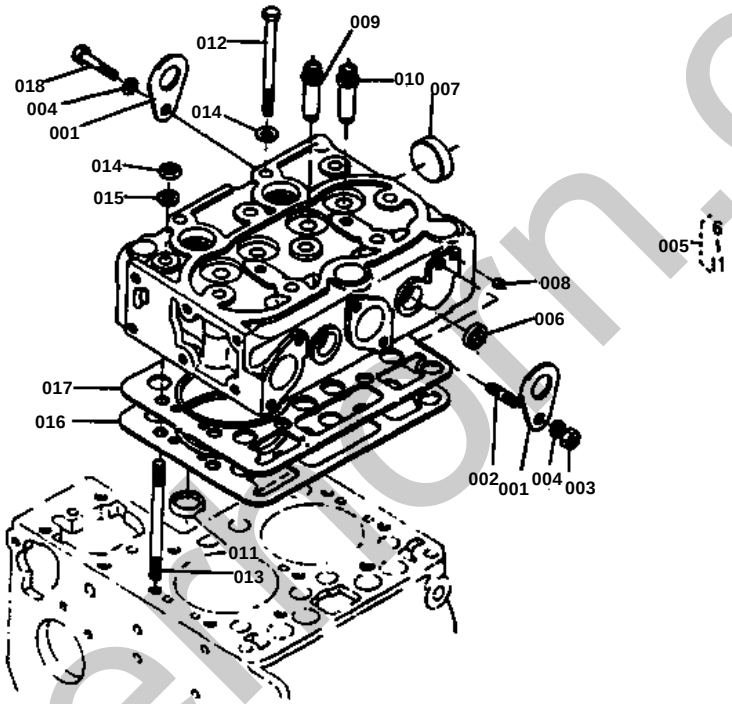

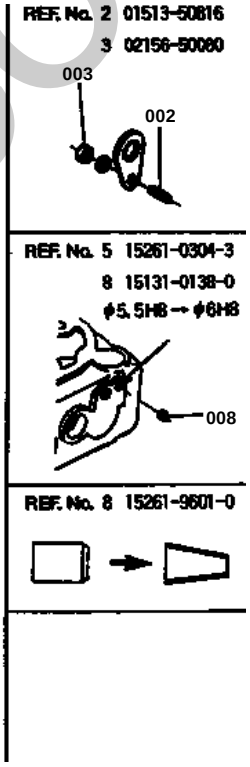

silverborn.co.uk

CYLINDER HEAD GROUP

↔ Interchangeable; ≠ not interchangeable; ← new for old; → old for new

REF.No	Part No.	Description	Q'ty	S.No.	I/C	REMARKS	Weight (kgf)	Weight (lb)
001	15221-01750	HOOK ENGINE	2				0.04	0.088
002	01513-50816	STUD	2	<=43771			0.009	0.0198
002	01513-50816	STUD	1	>=43772			0.009	0.0198
003	02156-50080	NUT	2	<=43771			0.004	0.0088
003	02156-50080	NUT	1	>=43772			0.004	0.0088
004	04512-50080	WASHER SPRING	2				0.001	0.0022
005	15261-03040	ASSY CYLINDER HEAD	1	<=43771		REF.No.006 TO 011	0	0
006	15261-03043	ASSY CYLINDER HEAD	1	>=1001		REF.No.006 TO 011	6.8	14.96
006	15261-03370	CAP SEALING	3				0.005	0.011
007	15321-96260	CAP SEALING	1				0.014	0.0308
008	15261-96860	PLUG BLIND	2	<=43771			0.001	0.0022
008	15131-01380	PLUC PIN	2	>=43772			0.001	0.0022
008	15261-96010	PLUG	2	>=123400			0.002	0.0044
009	15261-13540	GUIDE INLET VALVE	2				0.02	0.044
010	15261-13560	GUIDE EXHAUST VALVE	2				0.02	0.044
011	99999-99999	BLANK	0			ORDER BY REF.No.005	0	0
012	15261-03450	BOLT CYLINDER HEAD	8				0	0
013	15261-03410	STUD CYLINDER HEAD	2				0	0
014	15261-03510	NUT CYLINDER HEAD	2				0.006	0.0132
015	15261-03540	WASHER PLAIN	10				0.002	0.0044
016	15261-03310	GASKET CYLINDER HEAD	1				0	0
017	15261-03320	SHIM CYLINDER H/G	1				0.024	0.0528
018	01153-50816	BOLT	1	>=43772			0.01	0.022

silverhorn.co.uk

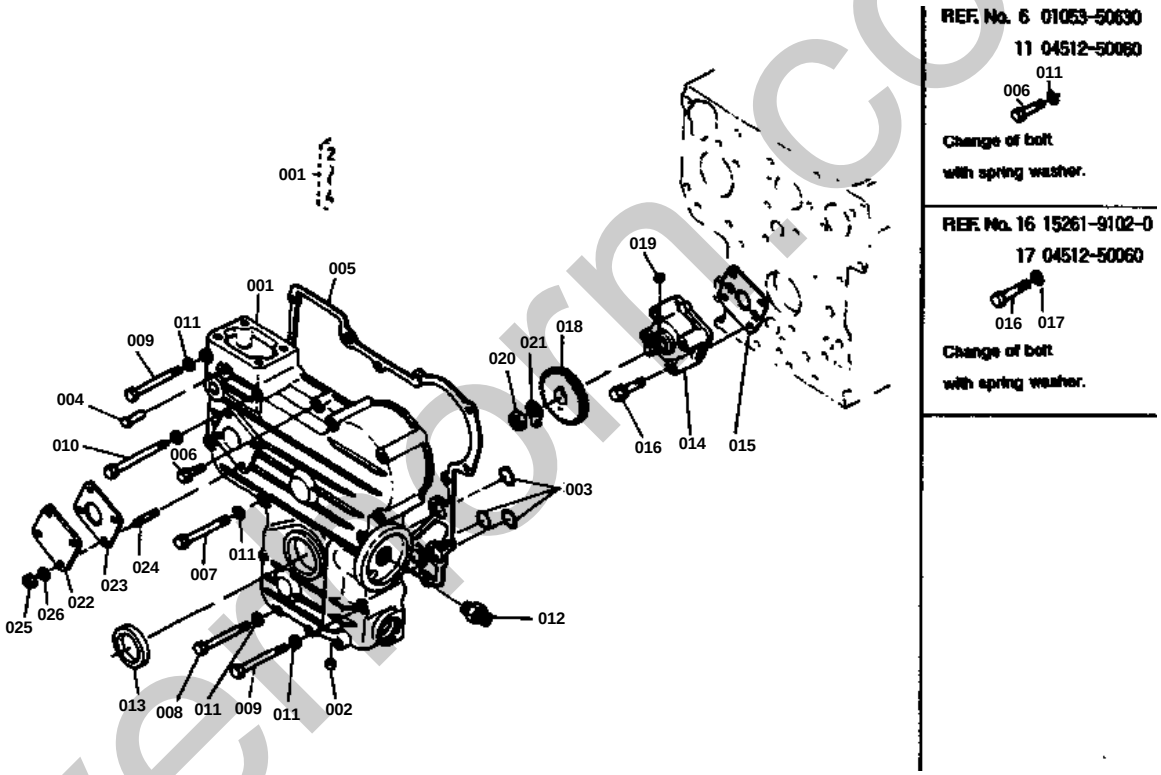

silvermorn.co.uk

GEAR CASE GROUP

↔ Interchangeable; ≠ not interchangeable; ← new for old; → old for new

REF.No	Part No.	Description	Q'ty	S.No.	I/C	REMARKS	Weight (kgf)	Weight (lb)
001	15381-04020	ASSY CASE GEAR	1			REF.No.002 TO 004	0	0
002	15221-33640	PLUG PIN	2				0.003	0.0066
003	04811-06130	O RING	3				0.001	0.0022
004	15221-56280	PIN START SPRING	1				0.006	0.0132
005	15261-04130	GASKET GEAR CASE	1				0	0
006	01053-50630	BOLT	1	<=2265			0.009	0.0198
006	01023-50630	BOLT	1	>=1001			0.008	0.0176
007	01053-50660	BOLT	3				0.014	0.0308
008	01053-50665	BOLT	8				0.015	0.033
009	01053-50670	BOLT	1				0.014	0.0308
010	14611-91060	BOLT	1				0.015	0.033
011	04512-50060	WASHER SPRING	14	<=2265			0	0
011	04512-50060	WASHER SPRING	13	>=2266			0	0
012	15241-32290	PIPE JOINT	1				0.053	0.1166
013	09550-00008	SEAL OIL	1				0.01	0.022
014	15261-35010	ASSY PUMP OIL	1				0.32	0.704
015	15261-35150	GASKET OIL PUMP	1				0	0
016	15261-91020	BOLT	4	<=147903			0	0
016	15261-91022	BOLT	4	>=1001			0.012	0.0264
017	04512-50060	WASHER SPRING	4	<=147903			0	0
018	15261-35660	GEAR OIL PUMP DRIVE	1				0	0
019	05712-00410	KEY FEATHER	1				0.001	0.0022
020	02016-50100	NUT	1				0.009	0.0198
021	04211-50100	WASHER CLAW	1				0.002	0.0044
022	15223-83340	COVER	1				0.152	0.3344
023	15221-88130	GASKET	1				0	0
024	15221-88210	STUD	4				0.005	0.011
025	02056-50060	NUT	4				0.002	0.0044
026	04512-50060	WASHER SPRING	4				0	0

silverhorn.co.uk

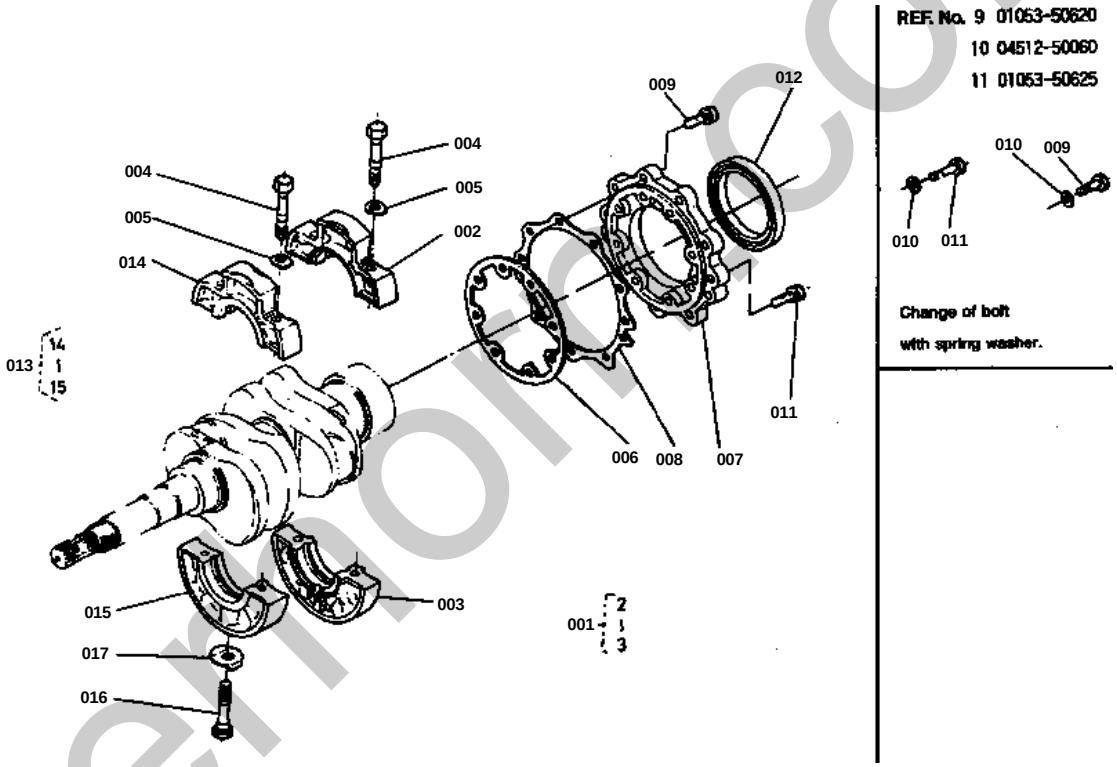

silvermoor.co.uk

BEARING CASE GROUP

↔ Interchangeable; ≠ not interchangeable; ← new for old; → old for new

REF.No	Part No.	Description	Q'ty	S.No.	I/C	REMARKS	Weight (kgf)	Weight (lb)
001	15261-04090	ASSY CASE MAIN BRG.	1			REF.No.002 003	0.8	1.76
002	99999-99999	BLANK	0			ORDER BY REF.No.001	0	0
003	99999-99999	BLANK	0			ORDER BY REF.No.001	0	0
004	15261-04540	BOLT BEARING CASE	4				0.02	0.044
005	15261-04570	WASHER BEARING CASE	4				0.001	0.0022
006	15261-04360	GASKET BEARING GASE	1				0	0
007	15261-04810	COVER BEARING CASE	1				0.204	0.4488
008	15261-04820	GASKET BRG CASE COV.	1				0	0
009	01053-50620	BOLT	9	<=2265			0.006	0.0132
009	01023-50620	BOLT	9	>=1001			0.006	0.0132
010	04512-50060	WASHER SPRING	17	<=2265			0	0
011	01053-50625	BOLT	8	<=2265			0.007	0.0154
011	01023-50626	BOLT	8	>=1001			0	0
012	09560-00007	SEAL OIL	1				0.029	0.0638
013	15261-04040	ASSY CASE MAIN BRG.	1			REF.No.014 015	0.687	1.5114
014	99999-99999	BLANK	0			ORDER BY REF.No.013	0	0
015	99999-99999	BLANK	0			ORDER BY REF.No.013	0	0
016	15261-04560	BOLT BEARING CASE	1				0.02	0.044
017	15261-04590	WASHER BEARING CASE	1				0.004	0.0088

silverhorn.co.uk

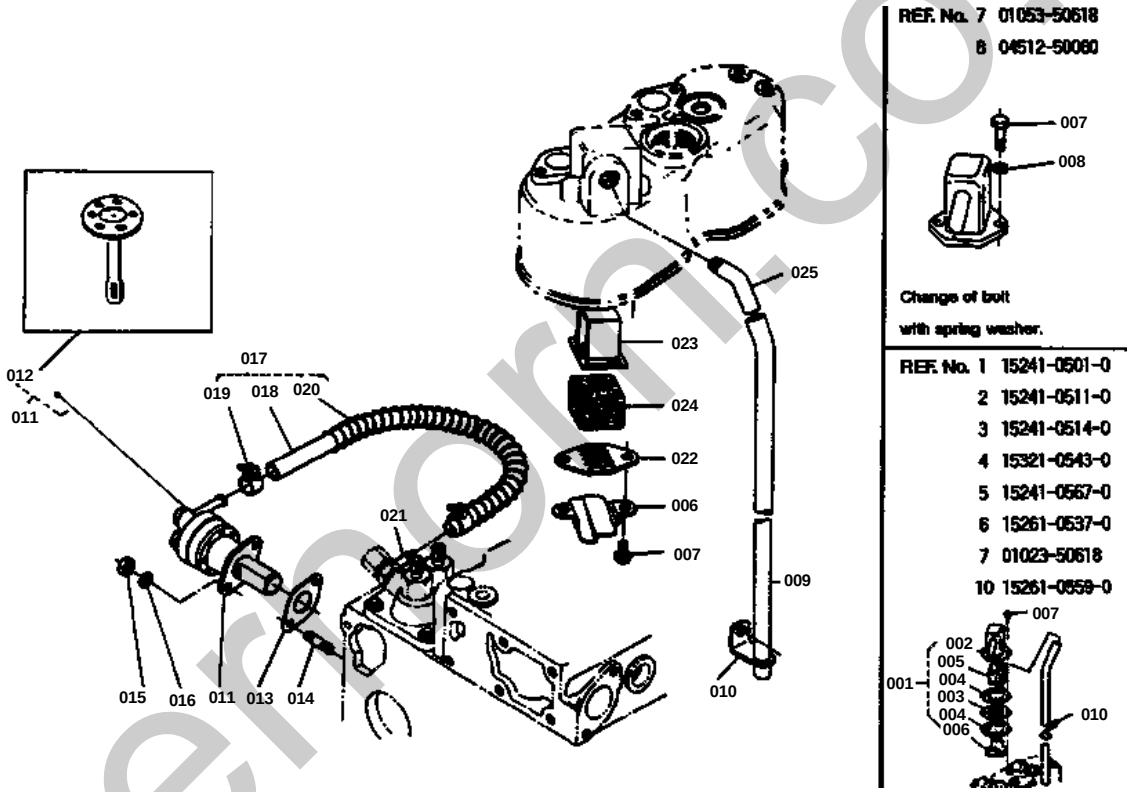

silvermorn.co.uk

BREATHER GROUP

↔ Interchangeable; ≠ not interchangeable; ← new for old; → old for new

REF.No	Part No.	Description	Q'ty	S.No.	I/C	REMARKS	Weight (kgf)	Weight (lb)
001	15241-05010	ASSY BREATHER	1	<=2420		REF.No.002 TO 005	0.15	0.33
001	15241-05110	BREATHER	1	<=2420			0.13	0.286
002	15241-05140	PLATE ELEMENT	1	<=2420			0.009	0.0198
003	15321-05430	GASKET COVER	2	<=2420			0	0
004	15241-05670	ELEMENT BREATHER	1	<=2420			0.008	0.0176
005	15261-05370	OIL SHIELD BREATHER	1	<=2420			0.005	0.011
005	15951-05370	OIL SHIELD BREATHER	1	>=2421			0.005	0.011
006	01053-50618	BOLT	2	<=2265			0.006	0.0132
006	01023-50618	BOLT	2	<=2420			0.006	0.0132
007	03024-50510	SCREW	2	>=2421			0.002	0.0044
008	04512-50060	WASHER SPRING	2				0	0
009	15261-05510	PIPE BREATHER	1				0.069	0.1518
010	15261-05590	CLAMP PIPE	1	<=2420			0.004	0.0088
010	15951-05590	CLAMP PIPE	1	>=2421			0.003	0.0066
011	15381-52030	ASSY PUMP FUEL	1			REF.No.012	0	0
012	15381-52040	COMP DIAPHRAGM	1				0	0
013	15241-52140	GASKET FUEL PUMP	1				0	0
014	01513-50616	STUD	2				0.004	0.0088
015	02056-50060	NUT	2				0.002	0.0044
016	04512-50060	WASHER SPRING	2				0	0
017	15261-42010	ASSY PIPE FUEL	1			REF.No.018 019	0.032	0.0704
017	15263-42010	ASSY PIPE FUEL	1	>=1001		REF.No.018 TO 020	0.04	0.088
018	99999-99999	BLANK	0			ORDER BY REF.No.017	0	0
019	14301-42750	CLIP PIPE	2				0.005	0.011
020	66591-54250	SPRING	1				0.01	0.022
021	14111-42410	JOINT ELEMENT 1	1				0.025	0.055
022	15951-05140	PLATE ELEMENT 1	1	>=2421			0.005	0.011
023	15521-05150	PLATE ELEMENT 2	1	>=2421			0.01	0.022
024	15521-05670	ELEMENT BREATHER	1	>=2421			0.01	0.022
025	15521-05550	JOINT BREATHER PIPE	1	>=2421			0.04	0.088

silverhorn.co.uk

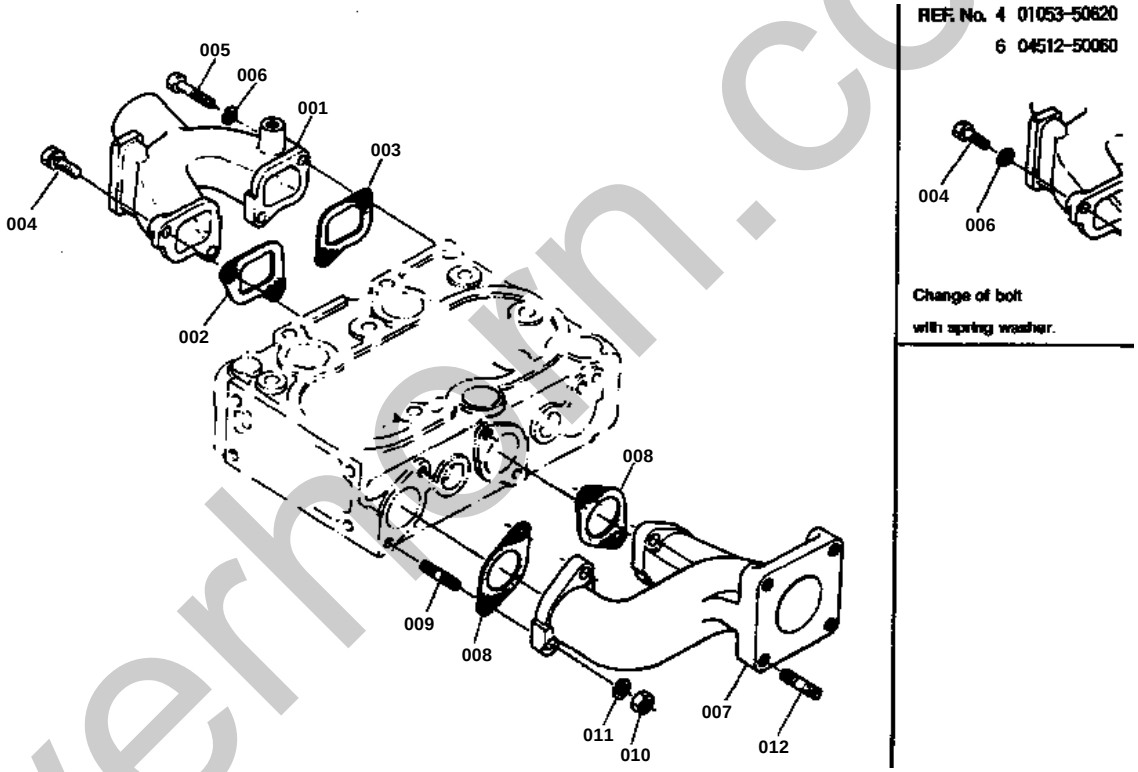

silverhorn.co.uk

INLET MANIFOLD GROUP

↔ Interchangeable; ≠ not interchangeable; ← new for old; → old for new

REF.No	Part No.	Description	Q'ty	S.No.	I/C	REMARKS	Weight (kgf)	Weight (lb)
001	15262-11760	MANIFOLD INLET	1				0.328	0.7216
002	15261-11820	GASKET IN-MANIFOLD	1				0	0
003	15261-11830	GASKET IN-MANIFOLD	1				0	0
004	01053-50620	BOLT	3	<=2265			0.006	0.0132
004	01023-50620	BOLT	3	>=1001			0.006	0.0132
005	01053-50650	BOLT	1				0.011	0.0242
006	04512-50060	WASHER SPRING	4	<=2265			0	0
006	04512-50060	WASHER SPRING	1	>=2266			0	0
007	15262-12310	MANIFOLD EXHAUST	1				1.19	2.618
008	15261-12360	GASKET EX-MANIFOLD	2				0	0
009	15381-91530	STUD	4				0	0
010	02056-50060	NUT	4				0.002	0.0044
011	04512-50060	WASHER SPRING	4				0	0
012	01513-50822	STUD	4				0.01	0.022

silverhorn.co.uk

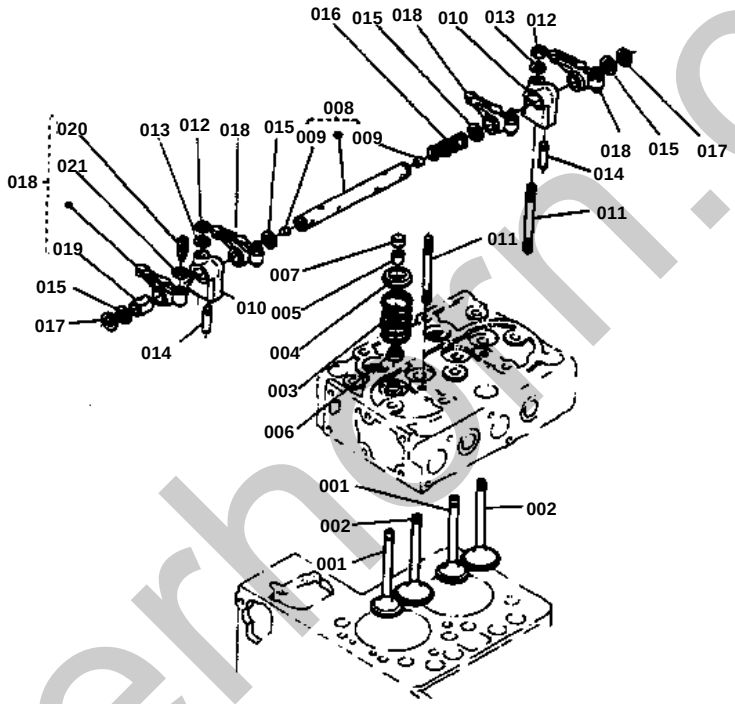

REF.No. 11 15951-1441-0
Change of length.

REF.No. 18 15261-1403-2
20 15261-1423-2

ℓ : 26→25.5mm

silverhorn.co.uk

VALVE ROCKER ARM GROUP

↔ Interchangeable; ≠ not interchangeable; ← new for old; → old for new

REF.No	Part No.	Description	Q'ty	S.No.	I/C	REMARKS	Weight (kgf)	Weight (lb)
001	15261-13110	VALVE INLET	2				0.043	0.0946
002	15261-13120	VALVE EXHAUST	2				0.038	0.0836
003	15261-13240	SPRING VALVE	4				0.02	0.044
004	15261-13330	RETAINER VALVE SP.	4				0	0
005	15261-13360	COLLET VALVE SPRING	8				0.004	0.0088
006	15261-13150	SEAL VALVE STEM	4				0.001	0.0022
007	15261-13280	CAP VALVE	4				0	0
008	15261-14050	ASSY SHAFT ROCKER	1			REF.No.009	0.082	0.1804
009	03410-00606	SCREW SET	2				0	0
010	15261-14310	BRACKET ROCKER ARM	2				0.003	0.0066
011	15261-14410	STUD	2	<=2420			0.02	0.044
011	15951-14410	STUD	2	>=2421			0	0
012	15261-92010	NUT	2				0.005	0.011
013	15261-94010	WASHER PLAIN	2				0.002	0.0044
014	15261-14420	SCREW SET	1				0.002	0.0044
015	15261-14430	WASHER	4				0.001	0.0022
016	15261-14310	SPRING ROCKER ARM	1				0.003	0.0066
017	04612-00110	CIR-CLIP EXTERNAL	2				0.001	0.0022
018	15261-14030	ASSY ROCKER ARM	4	<=2420		REF.No.019 TO 021	0	0
018	15261-14032	ASSY ROCKER ARM	4	>=2421		REF.No.019 TO 021	0	0
019	15261-14180	BUSH ROCKER ARM	4				0	0
020	15261-14230	SCREW ADJUSTING	4	<=2420			0	0
020	15261-14232	SCREW ADJUSTING	4	>=2421			0.006	0.0132
021	15261-14240	NUT	4				0.002	0.0044

silverhorn.co.uk

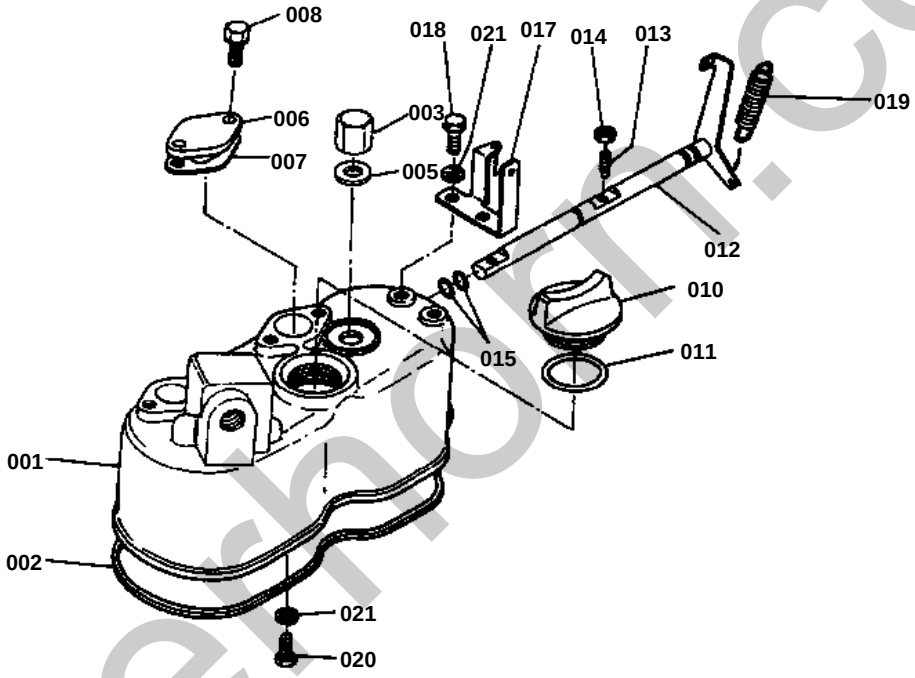

REF.No. 8 01053-50614
9 04512-50060

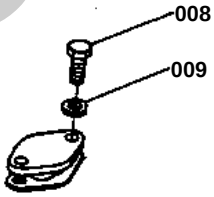

Change of bolt
with spring washer

REF.No. 1 15261-1451-0
3 15261-1462-0
4 15261-1464-0
5 15261-1463-0
16 15261-6655-0

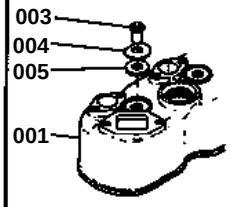

silverhorn.co.uk

HEAD COVER GROUP

↔ Interchangeable; ≠ not interchangeable; ← new for old; → old for new

REF.No	Part No.	Description	Q'ty	S.No.	I/C	REMARKS	Weight (kgf)	Weight (lb)
001	15261-14510	COVER CYLINDER HEAD	1	<=2420			0.51	1.122
001	15951-14510	COVER CYLINDER HEAD	1	>=2421			1.913	4.2086
002	15261-14520	GASKET HEAD COVER	1				0.003	0.0066
003	15261-14620	NUT HEADCOVER	2	<=2420			0.014	0.0308
003	15951-92330	NUT CAP	2	>=2421			0	0
004	15261-14640	WASHER HEAD COVER	2	<=2420			0.006	0.0132
005	15261-14630	GASKET NUT	2	<=2420			0.002	0.0044
005	15951-96660	GASKET NUT	2	>=2421			0.001	0.0022
006	15261-66630	COVER DECOMP HOLE	2				0.023	0.0506
007	15261-66640	GASKET	2				0	0
008	01053-50614	BOLT	4	<=2265			0.005	0.011
008	01023-50614	BOLT	4	>=10001			0.005	0.011
009	04512-50060	WASHER SPRING	4	<=2265			0	0
010	15221-33140	PLUG OIL FILLER	1				0.038	0.0836
011	04811-50300	O RING	1				0.001	0.0022
012	15261-66040	ASSY SHAFT DECOMP	1				0	0
013	15261-66350	BOLT DECOMPRESS	2				0.002	0.0044
014	02056-50050	NUT	2				0.002	0.0044
015	04811-00080	O RING	2				0.001	0.0022
016	15261-66550	STOPPER DECOMP SHAFT	1	<=2420			0.01	0.022
017	15261-66190	HOLDER DECOMP WIRE	1				0.03	0.066
018	01053-50614	BOLT	2				0.005	0.011
019	15221-66280	SPRING DECOMPRESS	1				0.008	0.0176
020	15221-66410	BOLT	1				0.005	0.011
021	04512-50060	WASHER SPRING	3				0	0

silverhorn.co.uk

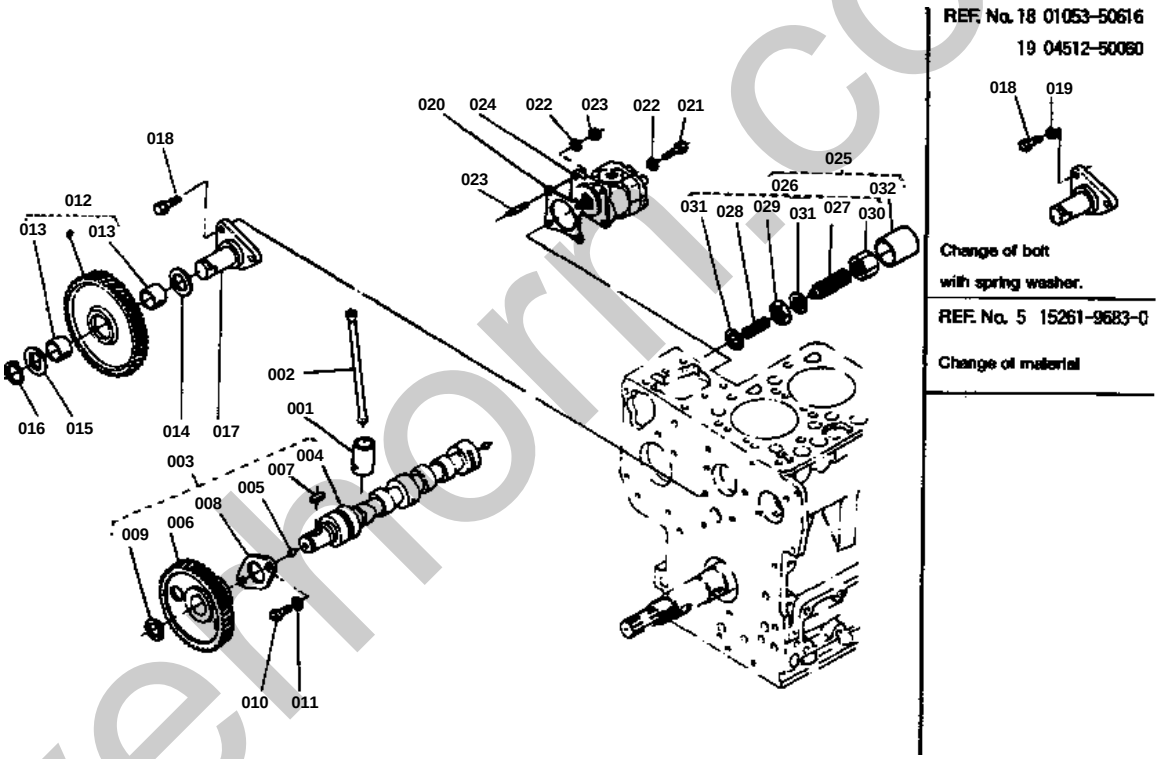

silverhorn.co.uk

CAMSHAFT GROUP

↔ Interchangeable; ≠ not interchangeable; ← new for old; → old for new

REF.No	Part No.	Description	Q'ty	S.No.	I/C	REMARKS	Weight (kgf)	Weight (lb)
001	15261-15550	TAPPET	4				0.03	0.066
002	15261-15110	ROD PUSH	4				0.022	0.0484
003	15261-16010	ASSY CAMSHAFT	1			REF.No.004 TO 009	1.1	2.42
004	15261-16150	CAMSHAFT	1				0.73	1.606
005	15261-96860	PLUG BLIND	2				0.001	0.0022
005	15261-96880	PLUG BLIND	2	>=1001			0.002	0.0044
006	15261-16510	GEAR CAMSHAFT	1				0.354	0.7788
007	05712-00515	KEY FEATHER	1				0.003	0.0066
008	15261-16270	STOPPER CAMSHAFT	1				0.034	0.0748
009	04612-00180	CIR-CLIP EXTERNAL	1				0.001	0.0022
010	01053-50614	BOLT	2				0.005	0.011
011	04512-50060	WASHER SPRING	2				0	0
012	15261-24010	ASSY GEAR IDELE	1			REF.No.013	0.59	1.298
013	15261-24980	BUSH IDLE GEAR	2				0.006	0.0132
014	15261-24360	COLLAR 1 IDLE GEAR	1				0.008	0.0176
015	15261-24370	COLLAR 2 IDLE GEAR	1				0.008	0.0176
016	15261-24320	CIR-CLIP IDLE GEAR	1				0.004	0.0088
017	15261-24250	SHAFT IDLE GEAR	1				0.2	0.44
018	01053-50616	BOLT	3	<=2265			0.005	0.011
018	01023-50616	BOLT	3	>=10001			0.005	0.011
019	04512-50060	WASHER SPRING	3	<=2265			0	0
020	15231-87130	GASKET O/P PUMP	1				0	0
021	01153-50822	BOLT	3				0.011	0.0242
022	04512-50080	WASHER SPRING	4				0.001	0.0022
023	01513-50822	STUD	1				0.01	0.022
024	66621-36100	ASSY PUMP GEAR	1				0	0
024	67211-76100	ASSY PUMP GEAR	1	>=1001			1.45	3.19
025	15261-54090	ASSY IDLING	1			REF.No.026 032	0.027	0.0594
026	15261-54100	ASSY BOLT ADJUSTING	1			REF.No.027 TO 031	0.008	0.0176
027	99999-99999	BLANK	0			ORDER BY REF.No.026	0	0
028	99999-99999	BLANK	0			ORDER BY REF.No.026	0	0
029	15261-92022	NUT	1				0	0
030	15261-92330	NUT	1				0.01	0.022
031	15021-33660	GASKET	2				0.001	0.0022
032	15261-54270	CAP	1				0.002	0.0044
032	02156-50080	NUT	1				0.004	0.0088

silverhorn.co.uk

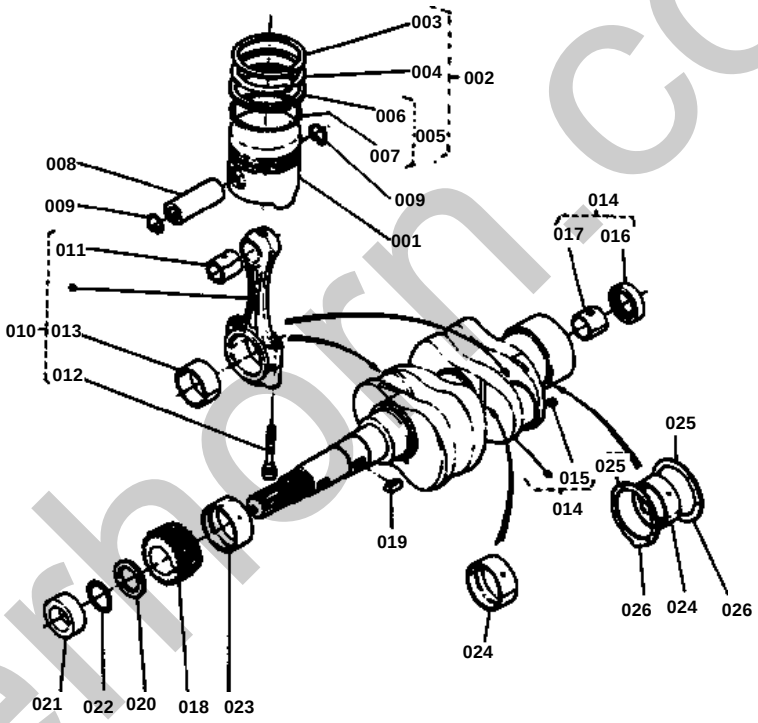

silverhorn.co.uk

PISTON CRANK SHAFT GROUP

↔ Interchangeable; ≠ not interchangeable; ← new for old; → old for new

REF.No	Part No.	Description	Q'ty	S.No.	I/C	REMARKS	Weight (kgf)	Weight (lb)
001	15261-21110	PISTON	2			STD	0.304	0.6688
001	15261-21910	PISTON	2			+0.5MM	0.3	0.66
002	15271-21050	ASSY PISTON RING	2			STD REF.No.002 TO 005	0.026	0.0572
002	15271-21090	ASSY PISTON RING	2			+0.5MM REF.No.002 TO 005	0.04	0.088
003	99999-99999	BLANK	0			ORDER BY REF.No.002	0	0
004	99999-99999	BLANK	0			ORDER BY REF.No.002	0	0
005	99999-99999	BLANK	0			ORDER BY REF.No.002	0	0
006	99999-99999	BLANK	0			ORDER BY REF.No.005	0	0
007	99999-99999	BLANK	0			ORDER BY REF.No.005	0	0
008	15261-21310	PLSION PIN	2				0.102	0.2244
009	15261-21330	CIR-CLIP PISTON PIN	4				0.001	0.0022
010	15261-22010	ASSY CONNECTING ROD	2				0	0
010	15531-22010	ASSY CONNECTING ROD	2	>=1001		REF.No.011 TO 013	0	0
011	15261-21980	BUSH PISTON PIN	2				0.012	0.0264
012	15261-22140	BOLT CONNECTING ROD	4				0	0
013	15261-22310	METAL CRANKPIN	2			SET STD	0	0
013	15531-22310	METAL CRANKPIN	2	>=1001		SET STD	0	0
013	15261-22970	METAL CRANKPIN	2			SET -0.2MM	0	0
013	15261-22980	METAL CRANKPIN	2			SET -0.4MM	0	0
014	15261-23010	ASSY CRANKSHAFT	1			REF.No.015 TO 017	0	0
015	15131-01380	PLUG PIN	2				0.001	0.0022
016	09400-14247	SEAL OIL	1				0.004	0.0088
017	66621-14120	BEARING	1				0.006	0.0132
018	15261-24110	GEAR CRANKSHAFT	1				0.164	0.3608
019	05712-00515	KEY FEATHER	1				0.003	0.0066
020	15261-23310	OIL SLINDER	1				0.008	0.0176
021	15261-23250	COLLAR CRANKSHAFT	1				0	0
022	04811-10220	O RING	1				0.001	0.0022
023	15261-23470	METAL CRANKSHAFT 1	1			STD	0	0
023	15261-23910	METAL CRANKSHAFT 1	1			-0.2MM	0	0
023	15261-23920	METAL CRANKSHAFT 1	1			-0.4MM	0	0
024	15261-23480	METAL CRANKSHAFT 2	2			SET STD	0	0
024	15261-23930	METAL CRANKSHAFT 2	2			SET -0.2MM	0	0
024	15261-23940	METAL CRANKSHAFT 2	2			SET -0.4MM	0	0
025	15261-23530	METAL SIDE 1	2			STD	0.006	0.0132
025	15261-23950	METAL SIDE 1	2			+0.2MM	0.006	0.0132
025	15261-23960	METAL SIDE 1	2			+0.4MM	0.007	0.0154
026	15261-23540	METAL SIDE 2	2			STD	0.007	0.0154
026	15261-23970	METAL SIDE 2	2			+0.2MM	0.006	0.0132
026	15261-23980	METAL SIDE 2	2			+0.4MM	0.007	0.0154

silverthorn.co.uk

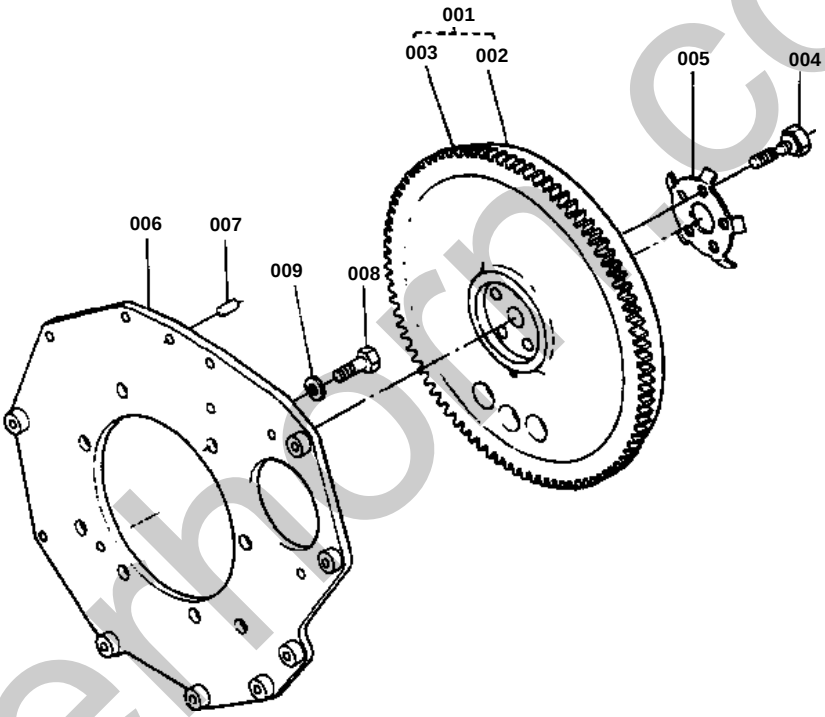

silverthorn.co.uk

FLYWHEEL GROUP

↔ Interchangeable; ≠ not interchangeable; ← new for old; → old for new

REF.No	Part No.	Description	Q'ty	S.No.	I/C	REMARKS	Weight (kgf)	Weight (lb)
001	15261-25010	ASSY FLYWHEEL	1			REF.No.002 003	0	0
002	99999-99999	BLANK	0			ORDER BY REF.No.001	0	0
003	15261-63820	GEAR RING	1				0	0
004	15261-25160	BOLT FLYWHEEL	5				0.03	0.066
005	15261-25170	WASHER FLYWHEEL	1				0.02	0.044
006	15261-04620	PLATE REAR END	1				2.71	5.962
007	05012-00814	PIN STRAIGHT	1				0.006	0.0132
008	01173-51025	BOLT	8				0.021	0.0462
009	04512-50100	WASHER SPRING	8				0	0

silverhorn.co.uk

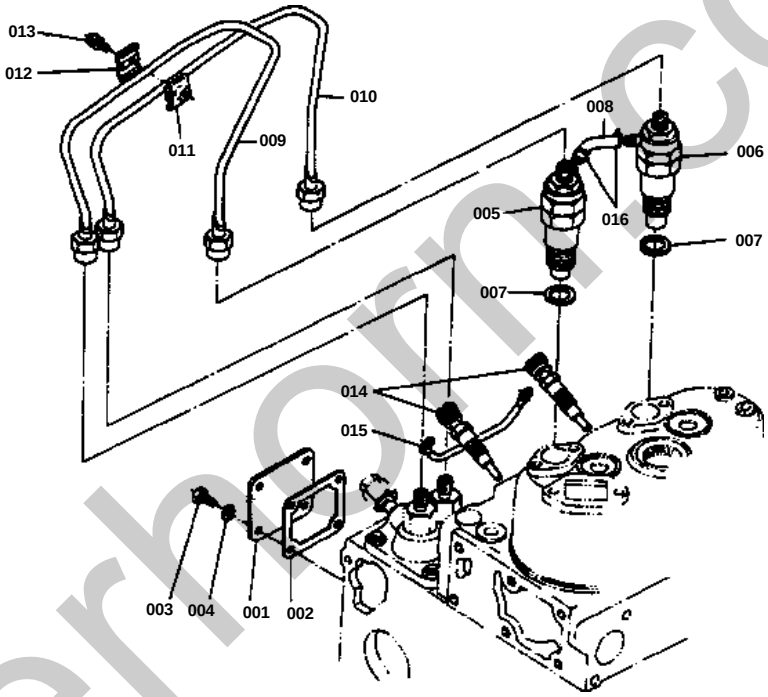

silverhorn.co.uk

NOZZLE HOLDER GROUP

↔ Interchangeable; ≠ not interchangeable; ← new for old; → old for new

REF.No	Part No.	Description	Q'ty	S.No.	I/C	REMARKS	Weight (kgf)	Weight (lb)
001	15241-51650	COVER INJECTION PUMP	1				0.082	0.1804
002	15231-05130	GASKET BREATHER	1				0	0
003	01053-50614	BOLT	4				0.005	0.011
004	04512-50060	WASHER SPRING	4				0	0
005	15271-53000	ASSY HOLDER NOZZLE	1				0.26	0.572
006	15271-53020	ASSY HOLDER NOZZLE	1				0.26	0.572
007	17011-53620	GASKET	2				0.003	0.0066
008	15261-42510	PIPE FUEL OVER FLOW	1				0.004	0.0088
009	15261-53710	PIPE INJECTION	1				0.103	0.2266
010	15261-53720	PIPE INJECTION	1				0.1	0.22
011	15121-53850	CLAMP PIPE	1				0	0
012	15121-53860	CLAMP PIPE	1				0	0
013	03024-50520	SCREW WITH WASHER	1				0.004	0.0088
014	15261-65510	GLOW PLUG	2				0.03	0.066
015	15261-65560	CORD GLOW PLUG	1				0.005	0.011
016	15271-42710	CLIP PIPE	2				0	0
016	14971-42710	CLIP PIPE	2	>=1001			0	0

silverhorn.co.uk

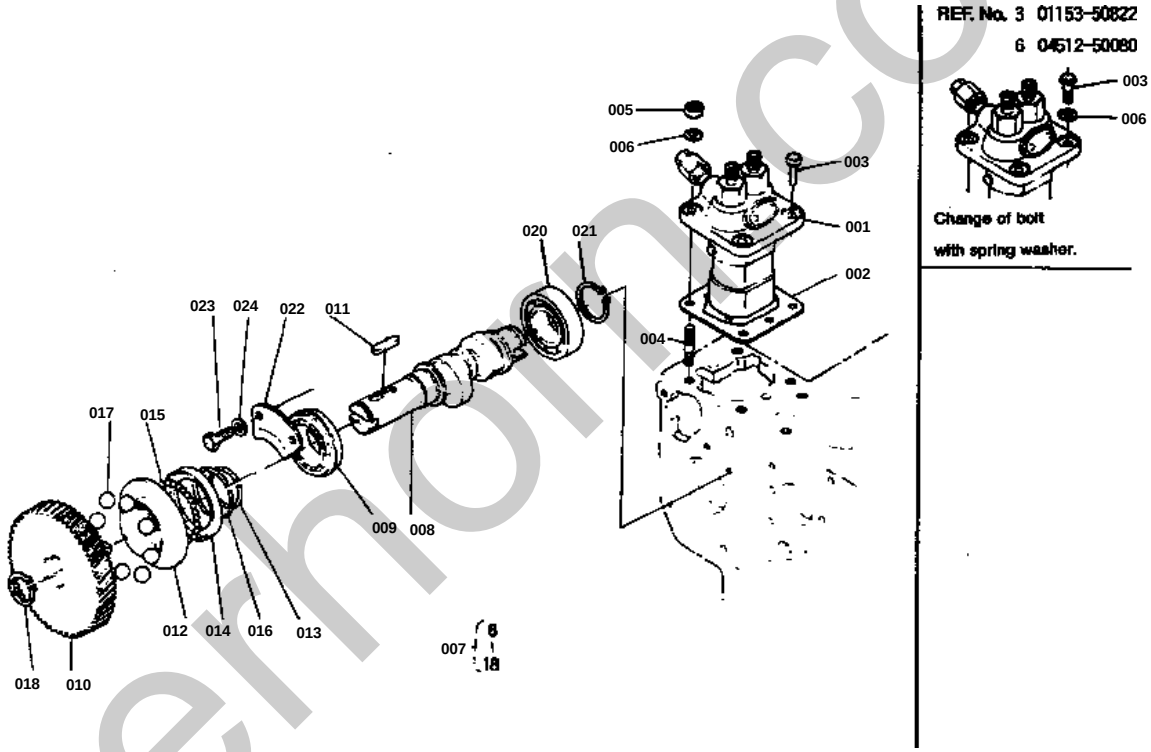

silvermom.co.uk

↔ Interchangeable; ≠ not interchangeable; ← new for old; → old for new

REF.No	Part No.	Description	Q'ty	S.No.	I/C	REMARKS	Weight (kgf)	Weight (lb)
001	15261-51010	ASSY PUMP INJECTION	1				1.45	3.19
002	15221-52110	SHIM INJETION	5				0.002	0.0044
003	01153-50822	BOLT	2	<=2265			0.011	0.0242
003	01123-50822	BOLT	2	>=1001			0.012	0.0264
004	01513-50822	STUD	2	<=2265			0.01	0.022
004	15221-91530	STUD	2	>=1001			0.011	0.0242
005	02156-50080	NUT	2				0.004	0.0088
006	04512-50080	WASHER SPRING	4	<=2265			0.001	0.0022
006	04512-50080	WASHER SPRING	2	>=2266			0.001	0.0022
007	15262-16020	ASSY CAMSHAFT FUEL	1			REF.No.008 TO 018	1.08	2.376
008	15262-16170	CAMSHAFT FUEL	1				0.335	0.737
009	08153-06004	BEARING BALL	1				0.07	0.154
010	15261-51150	GEAR INJECTION PUMP	1				0.463	1.0186
011	05712-00520	KEY FEATHER	1				0.004	0.0088
012	15261-55450	SLEEVE GOVERNOR	1				0.058	0.1276
013	15261-55470	CIR-CLIP SLEEVE	1				0.002	0.0044
014	15261-55690	CASE GOVERNOR BALL	1				0	0
015	07715-03205	BALL	30				0.001	0.0022
016	15261-55740	CIR-CLIP CASE	1				0.002	0.0044
017	07715-03217	BALL	8				0.01	0.022
018	04612-00180	CIR-CLIP EXTENAL	1				0.001	0.0022
019	99999-99999	BLANK	0				0	0
020	08103-06004	BEARING BALL	1				0.066	0.1452
021	04612-00200	CIR-CLIP EXTERNAL	1				0.001	0.0022
022	15261-16320	STOPPER F-CAMSHAFT	1				0.037	0.0814
023	01053-50612	BOLT	2				0.004	0.0088
024	04512-50060	WASHER SPRING	2				0	0

silverhorn.co.uk

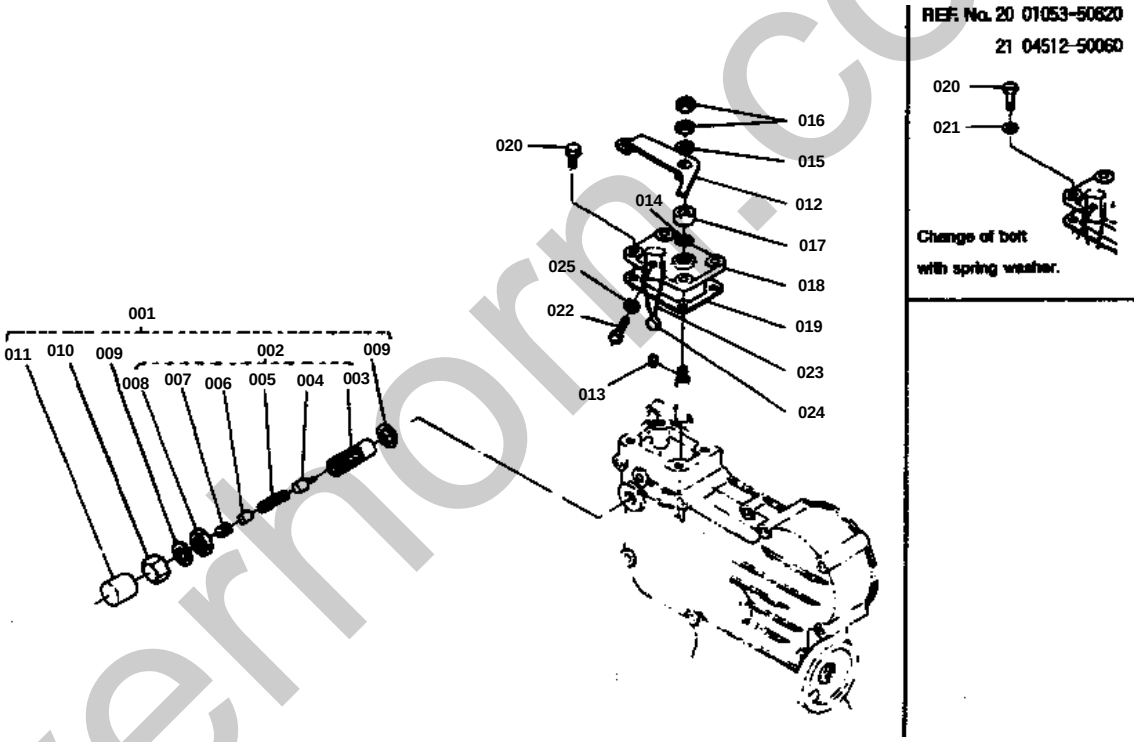

silvermorn.co.uk

SPEED CONTROL PLATE GROUP

↔ Interchangeable; ≠ not interchangeable; ← new for old; → old for new

REF.No	Part No.	Description	Q'ty	S.No.	I/C	REMARKS	Weight (kgf)	Weight (lb)
001	15261-54020	ASSY APPARATUS FUEL	1			REF.No.002 009 TO 011	0.058	0.1276
002	15261-54030	ASSY APPARATUS FUEL	1			REF.No.003 TO 008	0.034	0.0748
003	99999-99999	BLANK	0			ORDER BY REF.No.002	0	0
004	99999-99999	BLANK	0			ORDER BY REF.No.002	0	0
005	15261-54230	SPRING	1				0.001	0.0022
006	15221-54190	SPACER	1				0	0
007	14301-54430	SCREW SET	1				0.001	0.0022
008	15261-54370	NUT LOOK	1				0.007	0.0154
009	15109-33660	GASKET	2				0.001	0.0022
010	15261-54220	NUT CAP	1				0.02	0.044
011	14301-54420	CAP	1				0.005	0.011
012	15371-57150	LEVER SPEED CONTROL	1				0.035	0.077
013	15261-95010	KEY FEATHER	1				0.001	0.0022
014	04811-00070	O RING	1				0.001	0.0022
015	04013-50060	WASHER PLAIN	1				0	0
016	02012-50060	NUT	2				0	0
017	15261-57380	PLATE FRICTION	1				0	0
018	15261-57110	PLATE SPEED CONTROL	1				0.06	0.132
019	15261-57210	GASKET CONTROL PLATE	1				0	0
020	01053-50620	BOLT	4	<=2265			0.006	0.0132
020	01023-50620	BOLT	4	>=1001			0.006	0.0132
021	04512-50060	WASHER SPRING	4	<=2265			0	0

silverhorn.co.uk

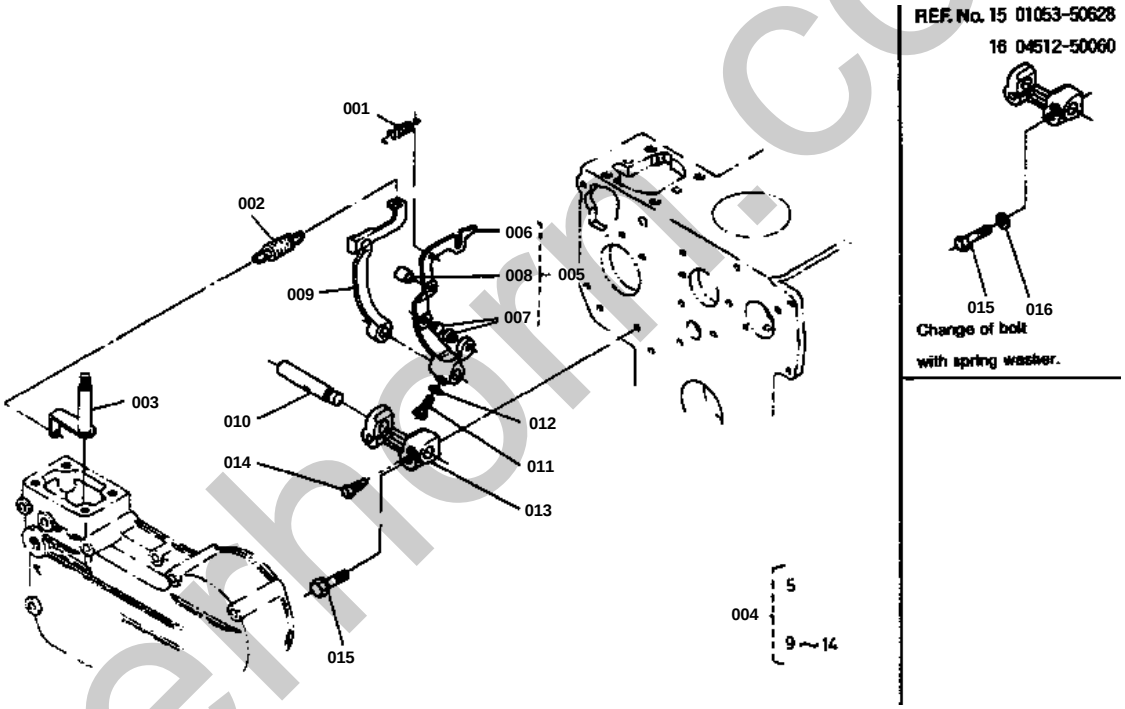

silvermoor.co.uk

↔ Interchangeable; ≠ not interchangeable; ← new for old; → old for new

REF.No	Part No.	Description	Q'ty	S.No.	I/C	REMARKS	Weight (kgf)	Weight (lb)
001	15261-56480	SPRING START	1				0	0
002	15261-56410	SPRING	1				0.007	0.0154
003	15261-55020	ASSY LEVER GOVERNOR	1				0	0
004	15261-56050	ASSY LEVER FORK	1			REF.No.005 009 TO 014	0.256	0.5632
005	15261-56040	ASSY LEVER FORK	1			REF.No.006 TO 008	0.12	0.264
006	99999-99999	BLANK	0			ORDER BY REF.No.005	0	0
007	99999-99999	BLANK	0			ORDER BY REF.No.005	0	0
008	99999-99999	BLANK	0			ORDER BY REF.No.005	0	0
009	15261-56130	LEVER FORK	1				0.063	0.1386
010	15261-56150	SHAFT FORK LEVER	1				0.032	0.0704
011	01053-50516	BOLT	1				0.003	0.0066
012	04512-50050	WASHER SPRING	2				0	0
013	15261-56230	HOLDER FORK LEVER	1				0.038	0.0836
014	15261-66410	BOLT	1				0.003	0.0066
015	01053-50628	BOLT	2	<=2265			0.008	0.0176
015	01023-50628	BOLT	2	>=1001			0.015	0.033
016	04512-50060	WASHER SPRING	2	<=2265			0	0

silverhorn.co.uk

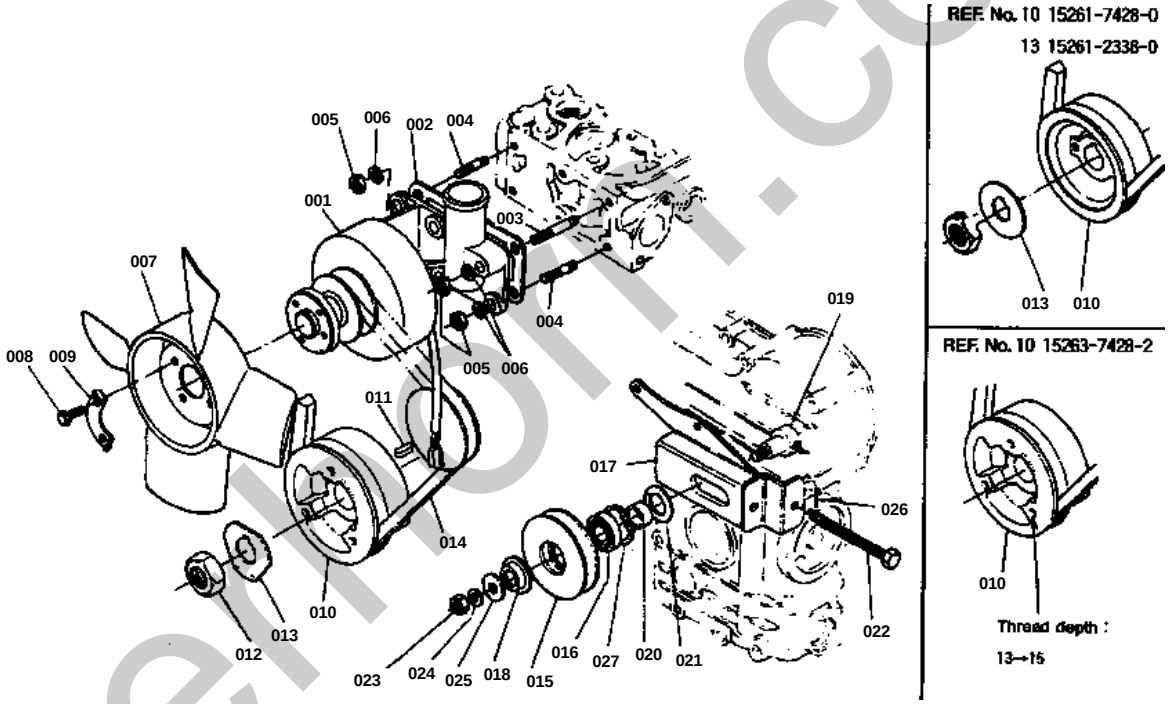

silverhorn.co.uk

DYNAMO GROUP

↔ Interchangeable; ≠ not interchangeable; ← new for old; → old for new

REF.No	Part No.	Description	Q'ty	S.No.	I/C	REMARKS	Weight (kgf)	Weight (lb)
001	15372-64010	ASSY DYNAMO	1				1.7	3.74
002	15261-72920	GASKET WATER FLANGE	1				0	0
003	01513-50645	STUD	1				0.011	0.0242
004	01513-50616	STUD	5				0.004	0.0088
005	02056-50060	NUT	6				0.002	0.0044
006	04512-50060	WASHER SPRING	6				0	0
007	15261-74110	FAN	1				0.28	0.616
008	01053-50610	BOLT	4				0.004	0.0088
009	15131-74230	WASHER FAN	2				0.005	0.011
010	15261-74280	PULLEY FAN DRIVE	1	<=135911			0.747	1.6434
010	15263-74280	PULLEY FAN DRIVE	1	>=1001			0.85	1.87
010	15263-74282	PULLEY FAN DRIVE	1	>=1001			0	0
011	05712-00515	KEY FEATHER	1				0.003	0.0066
012	15261-23360	NUT CRANKSHAFT	1				0.034	0.0748
013	15261-23380	WASHER CRANKSHAFT	1	<=135911			0.009	0.0198
013	15372-23380	WASHER CRANKSHAFT	1	>=1001			0.007	0.0154
014	15231-72530	BELT FAN	1				0.066	0.1452
015	14301-74320	PULLEY TENSION	1				0	0
016	15271-74190	BEARING BALL	1				0.065	0.143
017	15371-74410	SUPPORT TEN-PULLEY	1				0.33	0.726
018	15231-74770	COVER TEN-PULLEY	1				0.004	0.0088
019	15231-74330	SHAFT TEN-PULLEY	1				0.093	0.2046
020	15261-74430	COLLAR	1				0.013	0.0286
021	14301-74780	COVER TEN-PULLEY	1				0.005	0.011
022	15371-74970	BOLT TENSION	1				0.032	0.0704
023	02018-50100	NUT	1				0.011	0.0242
024	04512-50100	WASHER SPRING	1				0	0
025	04013-50100	WASHER PLAIN	1				0	0
026	99999-99999	BLANK	0			WIRE OBTAINED LOCALLY	0	0
027	04611-00400	CIR-CLIP INTERNAL	1				0.005	0.011

silverhorn.co.uk

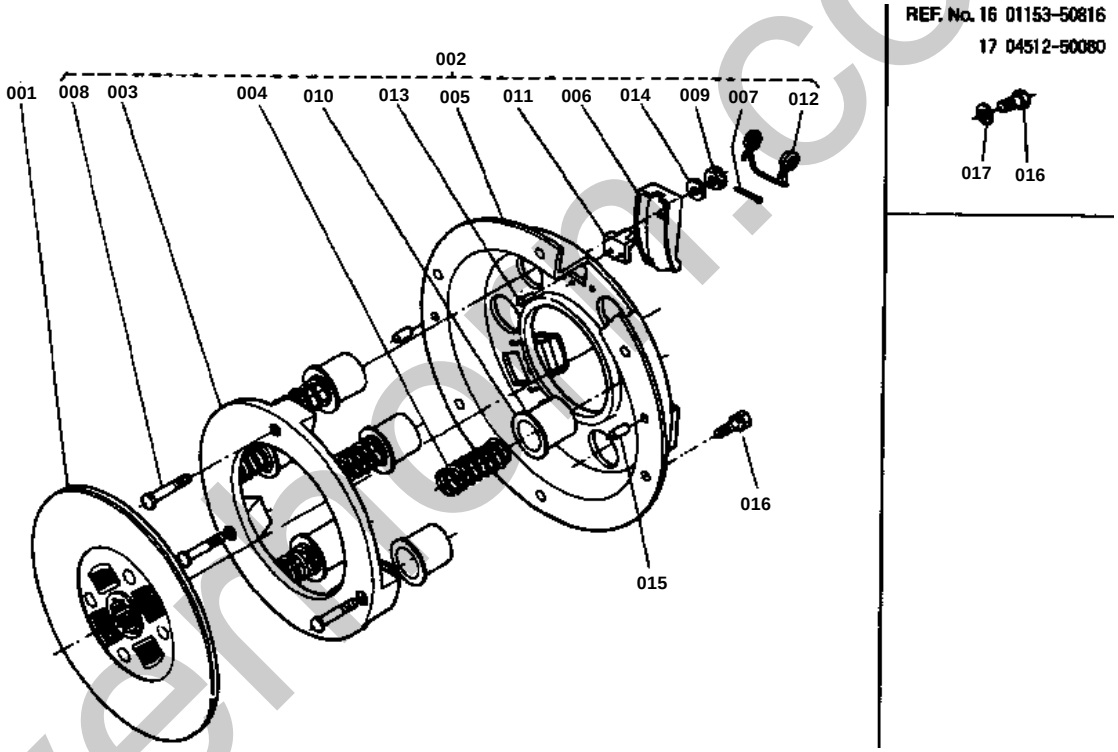

silvermoon.co.uk

CLUTCH GROUP

↔ Interchangeable; ≠ not interchangeable; ← new for old; → old for new

REF.No	Part No.	Description	Q'ty	S.No.	I/C	REMARKS	Weight (kgf)	Weight (lb)
001	66591-13300	ASSY DISK CLUTCH	1				0.9	1.98
002	66591-13400	ASSY PLATE PRESSURE	1			REF.No.003 TO 014	3.1	6.82
003	99999-99999	BLANK	0			ORDER BY REF.No.002	0	0
004	66591-13310	SPRING PRESSURE	6				0.058	0.1276
005	99999-99999	BLANK	0			ORDER BY REF.No.002	0	0
006	32200-14540	LEVER CLUTCH	3				0.05	0.11
007	32200-14500	PIN SPLIT	3				3.1	6.82
008	32200-14570	BOLT	3				0.009	0.0198
009	32130-14580	NUT	3				0.003	0.0066
010	32130-14590	CAP PRESSURE SPRING	6				0.024	0.0528
011	32130-14620	SEAT LEVER	3				0.017	0.0374
012	32130-14630	SPRING RETURN	3				0.006	0.0132
013	32130-14640	RIVET	6				0.001	0.0022
014	32130-14650	WASHER RELEASE YOKE	3				0.002	0.0044
015	05012-00614	PIN STRAIGHT	2				0.004	0.0088
016	01153-50816	BOLT	6				0.01	0.022
016	01123-50816	BOLT	6	>=1001			0.011	0.0242
017	04512-50080	WASHER SPRING	6				0.001	0.0022

silverhorn.co.uk

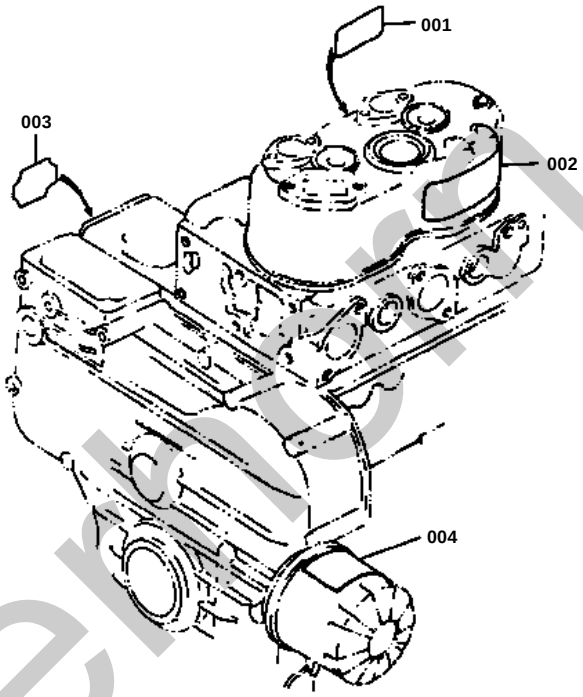

REF. No. 3 15372-8723-0
4 15372-8721-2

English → English and French.

silverhorn.co.uk

NAME PLATE GROUP

↔ Interchangeable; ≠ not interchangeable; ← new for old; → old for new

REF.No	Part No.	Description	Q'ty	S.No.	I/C	REMARKS	Weight (kgf)	Weight (lb)
001	15232-88210	LABEL GLOW PLUG	1				0.001	0.0022
002	15263-87310	LABEL OIL	1				0.26	0.572
003	15222-87210	LABEL INSTRUCTION	1	<=1295			0.001	0.0022
003	15372-87230	LABEL INSTRUCTION	1	>=10001			0.001	0.0022
004	15372-87210	LABEL INSTRUCTION	1	<=1295			0.001	0.0022
004	15372-87212	LABEL INSTRUCTION	1	>=1001			0	0

silverhorn.co.uk

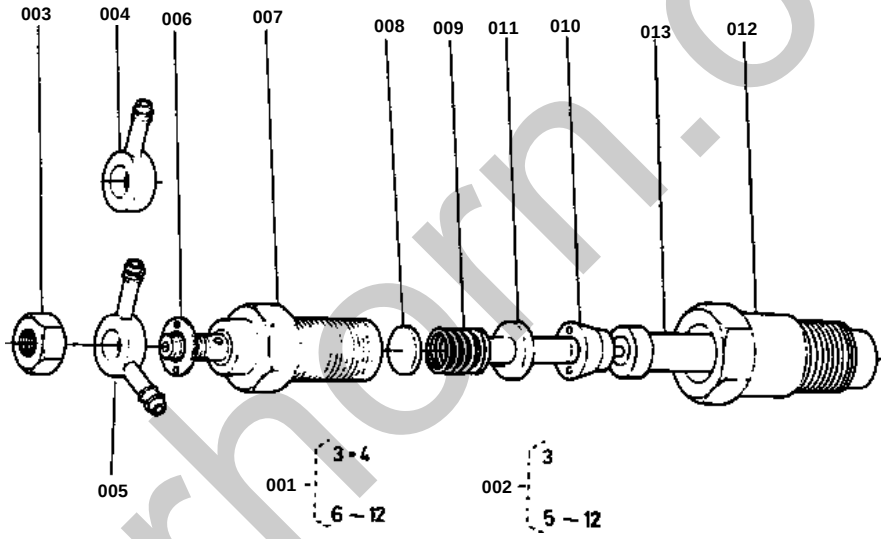

silverhorn.co.uk

NOZZLE HOLDER GROUP

↔ Interchangeable; ≠ not interchangeable; ← new for old; → old for new

REF.No	Part No.	Description	Q'ty	S.No.	I/C	REMARKS	Weight (kgf)	Weight (lb)
001	99999-99999	BLANK	0			ORDER BY REF.No.006 ON L.No.0B08-L0	0	0
002	99999-99999	BLANK	0			ORDER BY REF.No.006 ON L.No.0B08-L0	0	0
003	15221-92020	NUT	2				0.011	0.0242
004	15221-95680	JOINT EYE	1				0.021	0.0462
005	15221-95690	JOINT EYE	1				0.022	0.0484
006	15221-94020	WASHER PLAIN	2				0.002	0.0044
007	99999-99999	BLANK	0			ORDER BY REF.No.005 OR 006 ON L.No.0B08-	0	0
008	15221-53230	WASHER ADJUSTING	2				0.001	0.0022
009	15221-53170	SPRING NOZZLE	2				0.01	0.022
010	15221-53350	PIECE DISTANCE	2				0.016	0.0352
011	15221-53160	ROD PUSH	2				0.003	0.0066
012	15221-53280	NUT NOZZLE	2				0.068	0.1496
013	14111-53610	PIECE NOZZLE	2				0.045	0.099

silverhorn.co.uk

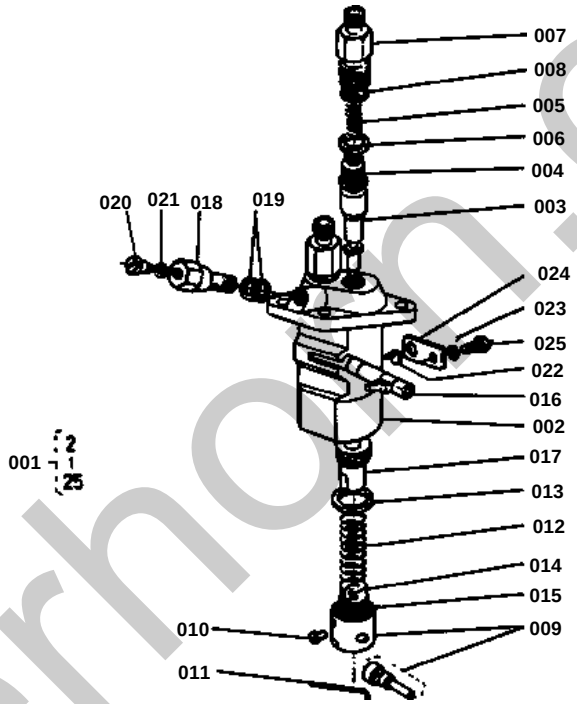

silverhorn.co.uk

↔ Interchangeable; ≠ not interchangeable; ← new for old; → old for new

REF.No	Part No.	Description	Q'ty	S.No.	I/C	REMARKS	Weight (kgf)	Weight (lb)
001	15261-51010	ASSY PUMP INJECTION	1			REF.No.002 TO 025	1.45	3.19
002	99999-99999	BLANK	0			ORDER BY REF.No.001	0	0
003	15261-51050	ELEMENT PUMP	2				0.04	0.088
004	15261-51030	VALVE DELIVERY	2				0.011	0.0242
005	15331-51230	SPRING DELIV. VALVE	2				0.001	0.0022
006	15331-51240	GASKET DELIV. VALVE	2				0.001	0.0022
007	15331-51220	HOLDER DELIV. VALVE	2				0.053	0.1166
008	15331-96760	O RING	2				0.001	0.0022
009	15331-51070	ASSY TAPPET	2				0.036	0.0792
010	15331-51250	PIN TAPPET GUIDE	2				0.001	0.0022
011	15331-51430	PIN CLAMP	1				0.001	0.0022
012	15331-51280	SPRING PLUNGER	2				0	0
013	15331-51270	SEAT SPRING UPPER	2				0.001	0.0022
014	15331-51290	SEAT SPRING UNDER	2				0.001	0.0022
015	99999-99999	BLANK	0			ORDER BY REF.No.001	0	0
016	15241-51060	RACK CONTROL	1				0.03	0.066
017	15331-51380	SLEEVE CONTROL	2				0.012	0.0264
018	15241-51320	SCREW	1				0.034	0.0748
019	15331-96650	GASKET	2				0.001	0.0022
020	15331-51350	SCREW AIR BREEDER	1				0	0
021	15331-96660	GASKET	1				0.001	0.0022
022	15331-51480	COLLAR	1				0.005	0.011
023	04512-50060	WASHER SPRING	1				0	0
024	15241-51390	PLATE ADJUST	1				0.01	0.022
025	15331-91010	BOLT	1				0.034	0.0748

silverhorn.co.uk

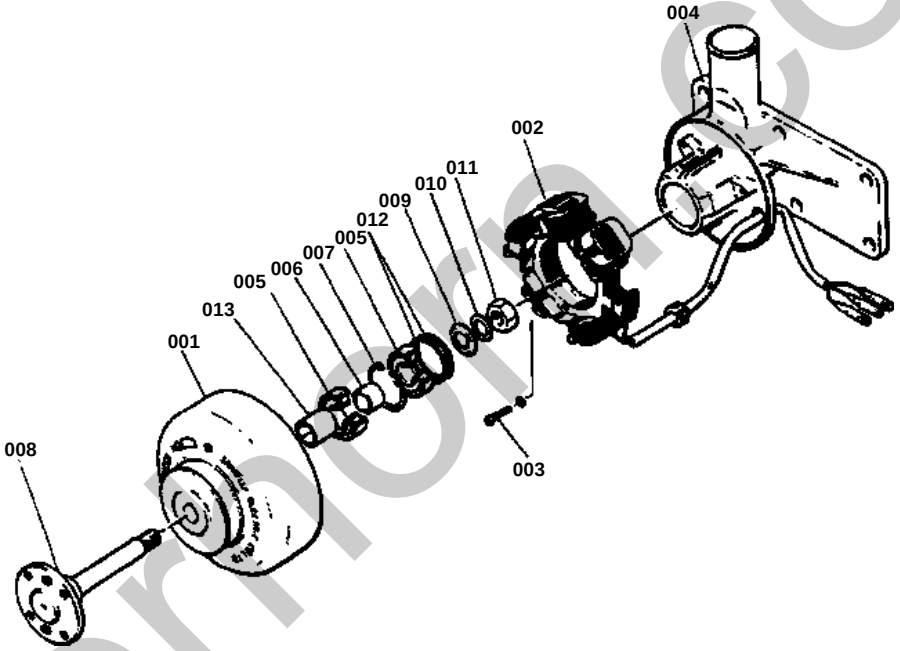

silvermoor.co.uk

↔ Interchangeable; ≠ not interchangeable; ← new for old; → old for new

REF.No	Part No.	Description	Q'ty	S.No.	I/C	REMARKS	Weight (kgf)	Weight (lb)
001	15372-64040	ROTOR	1				0.95	2.09
002	15372-64290	ASSY STATOR	1				0.23	0.506
003	15261-93010	SCREW	3				0.003	0.0066
004	15372-64360	BASE STAR STATOR	1				0	0
005	08123-06201	BEARING BALL	2				0	0
006	15261-64150	COLLAR	1				0.02	0.044
007	15261-95470	CIR-CLIP INTERNAL	1				0.002	0.0044
008	15372-74140	SHAFT FAN	1				0.22	0.484
009	15261-94020	WASHER PLAIN	1				0.007	0.0154
010	15261-94070	WASHER SPRING	1				0.003	0.0066
011	15261-92030	NUT	1				0.01	0.022
012	15241-64370	SHIM	3				0.001	0.0022
013	15261-64140	COLLAR	1				0.025	0.055

silverhorn.co.uk

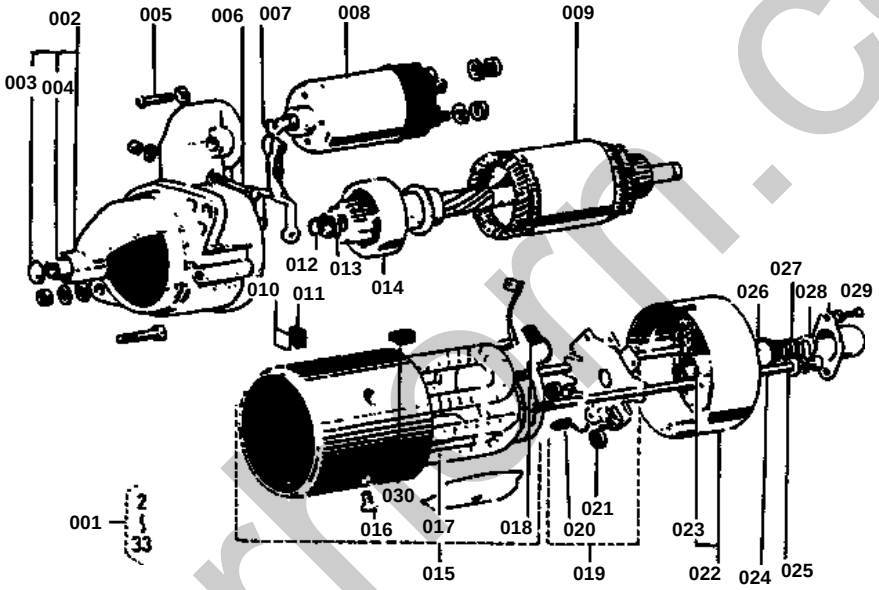

silvermm.co.uk

↔ Interchangeable; ≠ not interchangeable; ← new for old; → old for new

REF.No	Part No.	Description	Q'ty	S.No.	I/C	REMARKS	Weight (kgf)	Weight (lb)
001	15231-63010	ASSY STARTER	1			REF.No.002 TO 033	0	0
002	15231-63030	DRIVE END FRAME	1				0.45	0.99
003	15231-63220	CAP END FRAME	1				0.001	0.0022
004	17016-63250	BUSH	1				0.006	0.0132
005	15221-91370	SCREW	2				0.01	0.022
006	15231-91010	BOLT	1				0	0
007	15231-63050	LEVER DRIVE	1				0	0
008	15231-63020	MAGNET SWITCH	1				0.692	1.5224
009	15231-63072	ARWATURE	1				1.635	3.597
010	15231-63680	PLATE INSULATOR	1				0.007	0.0154
011	15231-63690	WASHER INSULATER	1				0.004	0.0088
012	15221-94820	CIR-CLIP EXTERNAL	1				0.001	0.0022
013	15221-63230	COLLAR	1				0	0
014	15231-63040	CLUTCH	1				0.28	0.616
015	15231-63080	YOKE	1				1.8	3.96
016	15221-91380	SCREW	4				0.008	0.0176
017	15221-63090	COIL FIELD	1				0	0
018	15221-63370	BRUSH	1				0.006	0.0132
019	15221-63380	HOLDER BRUSH	1				0.13	0.286
020	15221-63360	BRUSH	1				0.006	0.0132
021	15221-63390	SPRING BRUSH	2				0.003	0.0066
022	15221-63200	END FRAME	1				0.254	0.5588
023	15221-63250	BUSH	1				0.006	0.0132
024	15221-63320	BOLT THROUGH	2				0.017	0.0374
025	15231-94030	WASHER PLAIN	2				0.002	0.0044
026	15221-63520	PACKING	1				0.005	0.011
027	15221-63490	SPRING RETURN	1				0.004	0.0088
028	15221-94030	HOLDER SPRING	1				0.003	0.0066
029	15221-63510	CAP END FRAME	1				0.01	0.022
030	15231-63740	BUSH INSULATOR	1				0	0
031	15231-94040	WASHER PLAIN	1			NOT SHOWN IN FIG.	0.002	0.0044
032	15231-94060	WASHER PLAIN	1			NOT SHOWN IN FIG.	0	0
033	15231-94040	WASHER PLAIN	1			NOT SHOWN IN FIG.	0.002	0.0044

silverthorn.co.uk

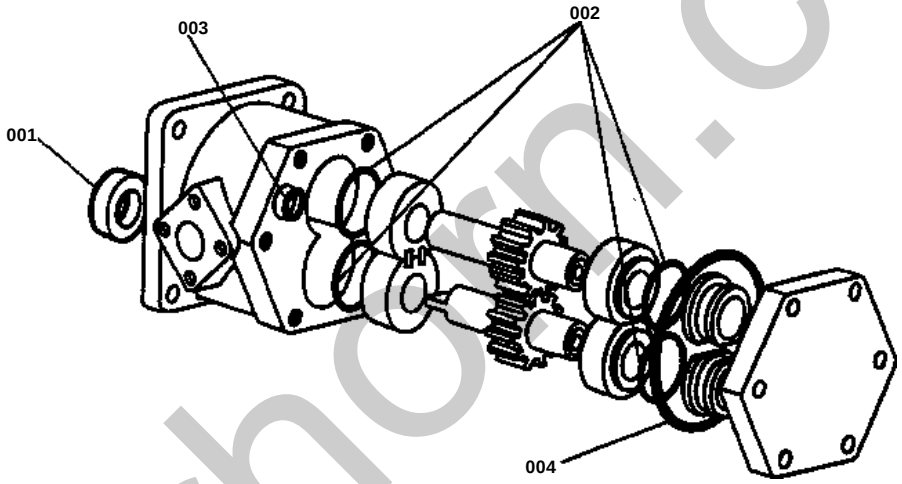

silverhorn.co.uk

↔ Interchangeable; ≠ not interchangeable; ← new for old; → old for new

REF.No	Part No.	Description	Q'ty	S.No.	I/C	REMARKS	Weight (kgf)	Weight (lb)
001	67211-76190	SEAL OIL	1				0	0
002	04810-00220	O RING	4				0.001	0.0022
003	04810-00050	O RING	1				0.001	0.0022
004	04810-50500	O RING	1				0.005	0.011

silverhorn.co.uk

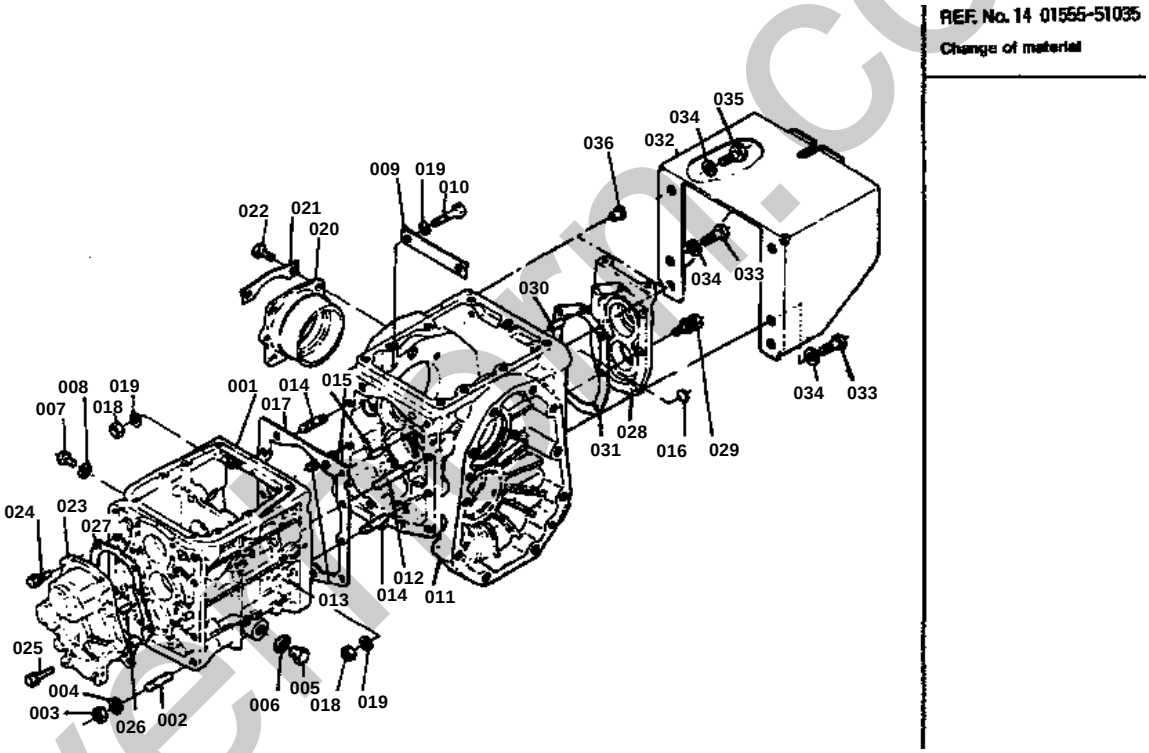

silverson.co.uk

TRANSMISSION CASE GROUP

↔ Interchangeable; ≠ not interchangeable; ← new for old; → old for new

REF.No	Part No.	Description	Q'ty	S.No.	I/C	REMARKS	Weight (kgf)	Weight (lb)
001	66621-11110	CASE TRANSMISSION	1				3	6.6
002	01551-51022	STUD	8				0	0
003	02118-50100	NUT	8				0.005	0.011
004	04512-50100	WASHER SPRING	8				0	0
005	06331-35016	PLUG	1				0.04	0.088
006	04717-01600	WASHER SEAL	1				0.003	0.0066
007	01050-50612	BOLT	1				0.005	0.011
008	04717-00600	WASHER SEAL	1				0.001	0.0022
009	66621-11120	PLATE LOCK	1				0.012	0.0264
010	01153-51055	BOLT	2				0.035	0.077
011	66621-11130	CASE DIFFERENTIAL	1				5	11
012	01552-51075	STUD	1				0.053	0.1166
013	01552-51085	STUD	1				0	0
014	01552-51035	STUD	6				0.029	0.0638
014	01555-51035	STUD	6	>=10001			0.029	0.0638
015	05012-00816	PIN STRAIGHT	2				0.007	0.0154
016	06311-75012	PLUG EXPANSION	2				0.002	0.0044
017	66621-11140	GASKET	1				0	0
018	02118-50100	NUT	8				0.005	0.011
019	04512-50100	WASHER SPRING	10				0	0
020	66621-11250	HOLDER DIFF BEARING	1				0.718	1.5796
021	66621-11260	PLATE LOCK	2				0.006	0.0132
022	01150-50820	BOLT	4				0.011	0.0242
023	66621-12110	COVER 1 SHAFT	1				0.308	0.6776
024	01120-50825	BOLT	4				0	0
025	01120-50832	BOLT	5				0.016	0.0352
026	05012-00816	PIN STRAIGHT	1				0.007	0.0154
027	66621-12120	GASKET	1				0	0
028	66494-12210	COVER REAR	1				1.2	2.64
029	01120-50832	BOLT	6				0.016	0.0352
030	05012-00816	PIN STRAIGHT	1				0.007	0.0154
031	66621-12220	GASKET	1				0	0
032	66494-11210	COVER P.T.O	1				1.6	3.52
033	01153-51235	BOLT	4				0.039	0.0858
034	04512-50120	WASHER SPRING	6				0.003	0.0066
035	01153-51225	BOLT	2				0.032	0.0704
036	66611-17450	PLUG	2				0.001	0.0022

silvernorn.co.uk

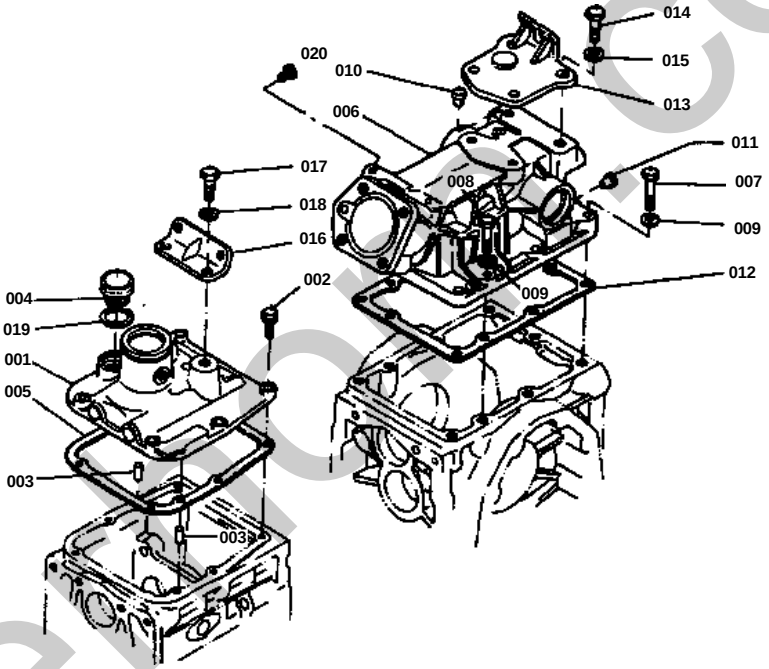

silverfox.co.uk

CASE COVER GROUP

↔ Interchangeable; ≠ not interchangeable; ← new for old; → old for new

REF.No	Part No.	Description	Q'ty	S.No.	I/C	REMARKS	Weight (kgf)	Weight (lb)
001	66621-12312	COVER CASE FRONT	1				0.74	1.628
002	01120-50830	BOLT	6				0	0
003	05012-00816	PIN STRAIGHT	2				0.007	0.0154
004	66591-11460	CAP	1				0.016	0.0352
005	66621-12320	GASKET	1				0	0
006	66611-12510	COVER CASE REAR	1				3.83	8.426
007	01153-51040	BOLT	3				0.03	0.066
008	01153-51035	BOLT	6				0.025	0.055
009	04512-50100	WASHER SPRING	9				0	0
010	66591-11350	BREATHER	1				0.002	0.0044
011	66591-11290	PLUG 2	2				0.001	0.0022
011	67111-11140	PLUG 2	2	>=10001			0	0
012	66611-12520	GASKET	1				0	0
013	66611-11910	BRACKET CHAIN	1				0.607	1.3354
014	01155-51230	BOLT	2				0	0
015	04512-50120	WASHER SPRING	2				0.003	0.0066
016	66621-12550	STAY	1				0.98	2.156
017	01150-51020	BOLT	2				0.018	0.0396
018	04512-50100	WASHER SPRING	2				0	0
019	04711-00400	GASKET	1				0.001	0.0022
019	04713-00400	GASKET	1	>=10001			0.001	0.0022
020	66591-54390	PLUG 3	2				0.001	0.0022

silverhorn.co.uk

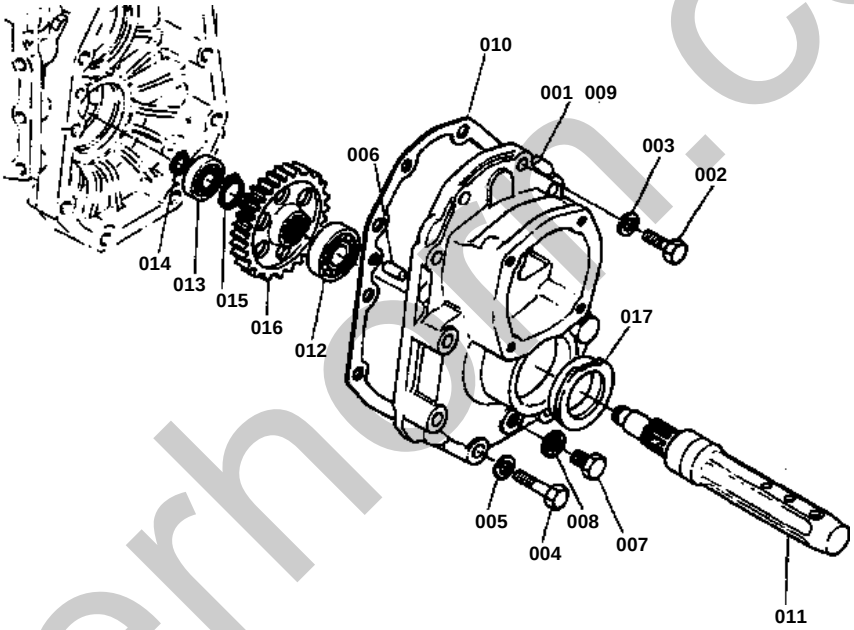

silverhorn.co.uk

AXLE CASE GROUP

↔ Interchangeable; ≠ not interchangeable; ← new for old; → old for new

REF.No	Part No.	Description	Q'ty	S.No.	I/C	REMARKS	Weight (kgf)	Weight (lb)
001	66811-12610	CASE AXLE LH	1				2	4.4
002	01153-51035	BOLT	8				0.025	0.055
003	04512-50100	WASHER SPRING	8				0	0
004	01153-51265	BOLT	12				0.065	0.143
005	04512-50120	WASHER SPRING	12				0.003	0.0066
006	05012-00816	PIN STRAIGHT	4				0.007	0.0154
007	06331-35012	PLUG	2				0.022	0.0484
008	04717-01200	WASHER SEAL	2				0.002	0.0044
009	66811-12620	CASE AXLE RH	1				3.2	7.04
010	66621-12630	GASKET	2				0	0
011	66621-17113	AXLE REAR	2				4.95	10.89
012	08101-06208	BEARING BALL(6208)	2				0.355	0.781
013	08101-06206	BEARING BALL(6206)	2				0.196	0.4312
014	04612-00300	CIR-CLIP EXTERNAL	2				0.003	0.0066
015	04612-00400	CIR-CLIP EXTERNAL	2				0.005	0.011
016	66494-17120	GEAR SPUR 52	2				1.68	3.696
017	66911-17810	SEAL OIL	2				0.058	0.1276

silverhorn.co.uk

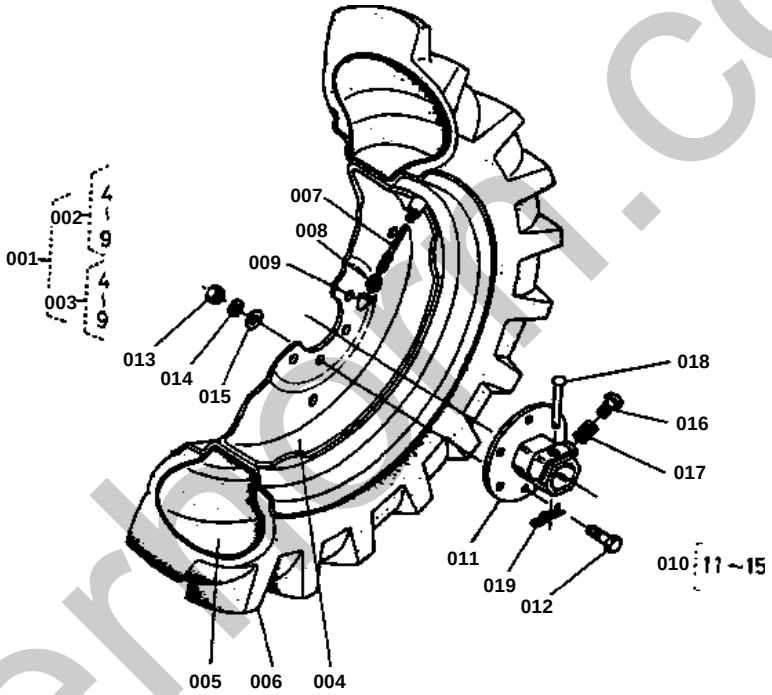

silverhorn.co.uk

↔ Interchangeable; ≠ not interchangeable; ← new for old; → old for new

REF.No	Part No.	Description	Q'ty	S.No.	I/C	REMARKS	Weight (kgf)	Weight (lb)
001	99999-99999	BLANK	0			ASSY REAR WHEEL 7-16 OBTAINED LOCALLY RE	0	0
002	99999-99999	BLANK	0			ASSY REAR WHEEL LH OBTAINED LOCALLY REF.	0	0
003	99999-99999	BLANK	0			ASSY REAR WHEEL RH OBTAINED LOCALLY REF.	0	0
004	99999-99999	BLANK	0			WHEEL OBTAINED LOCALLY	0	0
004	99999-99999	BLANK	0			WHEEL OBTAINED LOCALLY	0	0
005	99999-99999	BLANK	0			TUBE OBTAINED LOCALLY	0	0
006	99999-99999	BLANK	0			TIRE OBTAINED LOCALLY	0	0
007	99999-99999	BLANK	0			ASSY VALVE OBTAINED LOCALLY	0	0
008	99999-99999	BLANK	0			VALVE OBTAINED LOCALLY	0	0
009	99999-99999	BLANK	0			CAP OBTAINED LOCALLY	0	0
010	66704-17100	ASSY HUB WHEEL	1			REF.No.011 TO 015	0	0
011	66704-17150	HUB WHEEL	2				2.6	5.72
012	01073-51430	BOLT	12				0.058	0.1276
013	02076-50140	NUT	12				0.022	0.0484
014	04512-50140	WASHER SPRING	12				0	0
015	04013-50140	WASHER PLAIN	12				0	0
016	63733-17250	BOLT WHEEL HUB SET	2				0.08	0.176
017	63512-17230	SPRING SET BOLT	2				0.014	0.0308
018	66621-17160	PIN AXLE	2				0.05	0.11
019	62131-17290	PIN SNAP	2				0.004	0.0088

silverhorn.co.uk

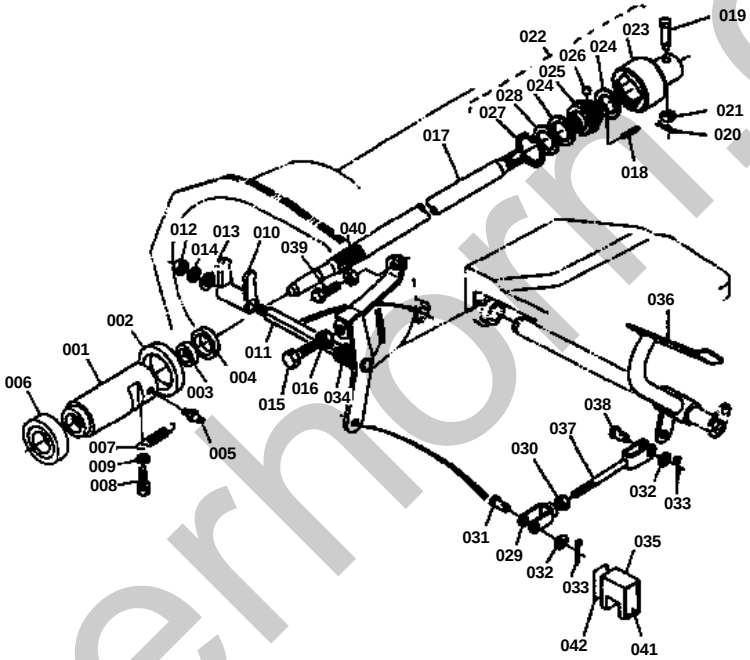

REF. No. 35 66711-4215-0

ℓ : 25→40mm

REF. No. 41 66706-4725-0

English → English and French.

silverhorn.co.uk

CLUTCH ROD GROUP

↔ Interchangeable; ≠ not interchangeable; ← new for old; → old for new

REF.No	Part No.	Description	Q'ty	S.No.	I/C	REMARKS	Weight (kgf)	Weight (lb)
001	66621-13314	HOLDER RELEASE BRG.	1				0.63	1.386
002	66621-51420	SEAL OIL	1				0.011	0.0242
003	09030-20328	SEAL OIL	1				0.009	0.0198
004	09030-20357	SEAL OIL	1				0.009	0.0198
005	06613-10675	NIPPLE GREASE	1				0.003	0.0066
006	32150-14820	BEARING THRUST BALL	1				0.2	0.44
007	66611-13340	SPRING RELEASE	1				0.006	0.0132
008	01202-50610	BOLT	1				0.004	0.0088
009	04013-50060	WASHER PLAIN	1				0	0
010	66621-13350	FORK CLUTCH RELEASE	1				0.095	0.209
011	66494-13410	ROD CLUTCH	1				0.35	0.77
012	02114-50080	NUT	1				0.005	0.011
013	04013-50080	WASHER PLAIN	1				0	0
014	04512-50080	WASHER SPRING	1				0.001	0.0022
015	66711-13320	BOLT CLUTCH ADJUST.	1				0.028	0.0616
016	02116-50100	NUT	1				0.004	0.0088
017	66811-14110	SHAFT PROPELLER	1				1.136	2.4992
018	05411-00532	PIN SPRING	1				0.003	0.0066
019	66611-14120	PIN JOINT	1				0	0
020	66611-14130	PIN SET	1				0.001	0.0022
021	04717-00500	WASHER SEAL	1				0.001	0.0022
022	66611-14100	ASSY BALL JOINT	1			REF.No.023 TO 028	0.307	0.6754
023	66611-14140	COUPLING BALL OUTER	1				0.2	0.44
024	66611-14150	GASKET BALL JOINT	2				0	0
025	66611-14160	COUPLING BALL INNER	1				0.076	0.1672
026	07715-00803	BALL	4				0.004	0.0088
027	04611-00350	CIR-CLIP INTERNAL	1				0.003	0.0066
028	66611-14170	RETAINER GASKET	1				0	0
029	66621-43130	U-JOINT	1				0.06	0.132
030	02112-50080	NUT	1				0.003	0.0066
031	05122-50825	PIN JOINT	1				0.011	0.0242
032	04012-50080	WASHER PLAIN	2				0.001	0.0022
033	05511-50215	PIN SPLIT	2				0.001	0.0022
034	66621-13420	SPRING	1				0.04	0.088
035	66591-43270	SPACER PEDAL	1	<=16140			0.02	0.044
035	66711-42150	SPACER PEDAL	1	>=10001			0.027	0.0594
036	66811-43110	PEDAL CLUTCH	1				0.927	2.0394
037	66811-43120	ROD CLUTCH	1				0.065	0.143
038	05122-50820	PIN JOINT	1				0.009	0.0198
039	66601-54750	BOLT	1				0.016	0.0352
040	02112-50080	NUT	1				0.003	0.0066
041	32130-15930	LABEL	1	<=16140			0.001	0.0022
041	66706-47250	LABEL	1	>=10001			0.001	0.0022
042	32150-15980	LABEL	1				0.001	0.0022

silvermorn.co.uk

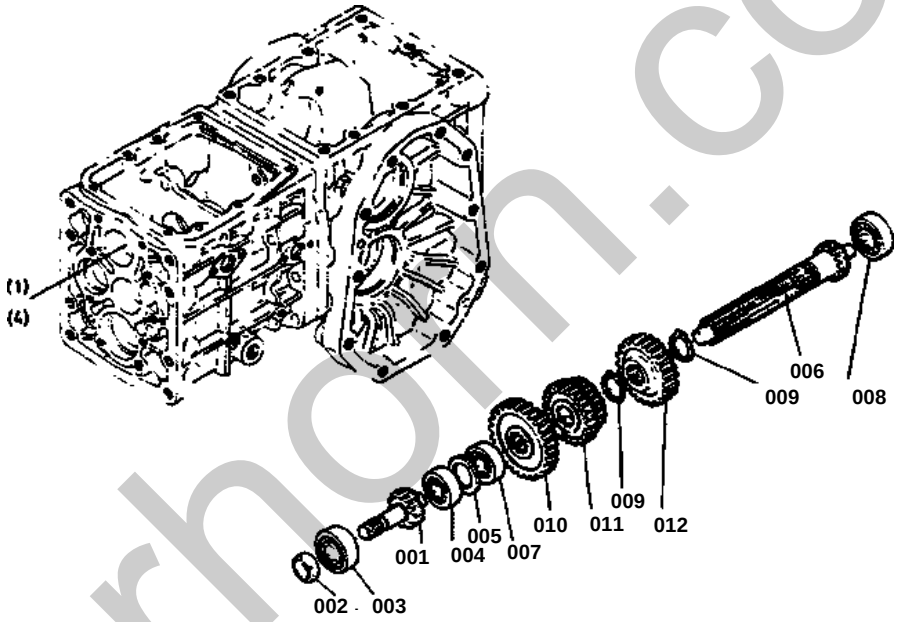

silverhorn.co.uk

1ST SHAFT 4TH SHAFT GROUP

↔ Interchangeable; ≠ not interchangeable; ← new for old; → old for new

REF.No	Part No.	Description	Q'ty	S.No.	I/C	REMARKS	Weight (kgf)	Weight (lb)
001	66494-14210	SHAFT 1	1				0.197	0.4334
002	09500-17308	SEAL OIL	1				0.009	0.0198
003	08101-06303	BEARING BALL(6303)	1				0.112	0.2464
004	08101-06203	BEARING BALL(6203)	1				0.063	0.1386
005	66621-14220	SPACER	1				0.005	0.011
006	66621-14510	SHAFT	1				0.58	1.276
007	08101-06203	BEARING BALL(6203)	1				0.063	0.1386
008	08101-06302	BEARING BALL(6302)	1				0.084	0.1848
009	04612-00220	CIR-CLIP EXTERNAL	2				0.001	0.0022
010	66621-14520	GEAR 29	1				0.322	0.7084
011	66621-14532	GEAR 20-16	1				0.32	0.704
012	66621-14540	GEAR 26	1				0.254	0.5588

silverhorn.co.uk

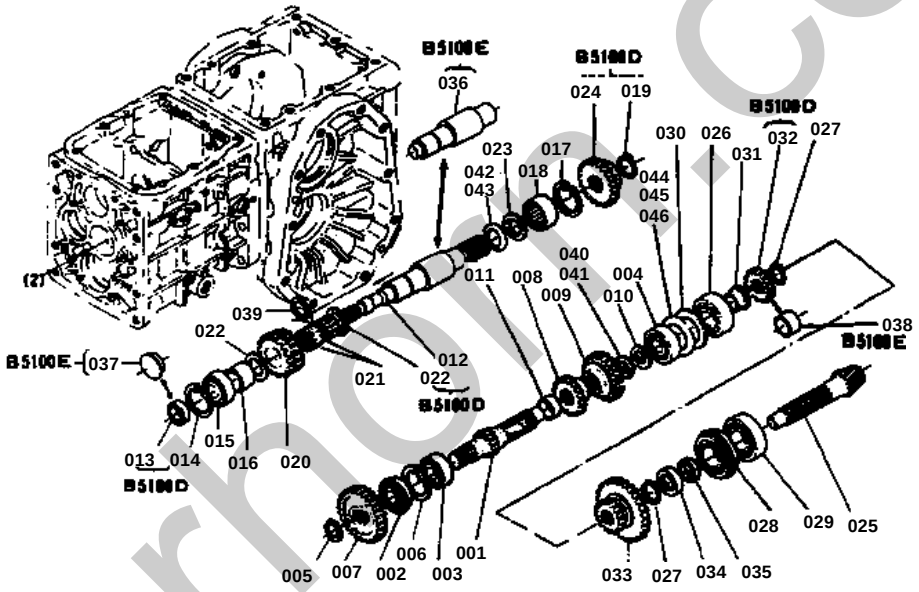

silvermoon.co.uk

2ND SHAFT REVERSE SHAFT GROUP

↔ Interchangeable; ≠ not interchangeable; ← new for old; → old for new

REF.No	Part No.	Description	Q'ty	S.No.	I/C	REMARKS	Weight (kgf)	Weight (lb)
001	66621-14310	SHAFT 2	1				0	0
002	08151-06203	BEARING BALL(6203NR)	1				0.07	0.154
003	08101-06203	BEARING BALL(6203)	1				0.063	0.1386
004	08101-06302	BEARING BALL(6302)	1				0.084	0.1848
005	04612-00160	CIR-CLIP EXTERNAL	1				0.001	0.0022
006	04611-00400	CIR-CLIP INTERNAL	1				0.005	0.011
007	66494-14320	GEAR 34	1				0.276	0.6072
008	66621-14332	GEAR 13	1				0.148	0.3256
009	66621-14342	GEAR 17	1				0.16	0.352
010	66621-14350	SPACER	1				0.002	0.0044
011	66621-14360	COLLAR	1				0.004	0.0088
012	66621-14610	SHAFT REVERSE	1				0.542	1.1924
013	09500-17308	SEAL OIL	1				0.009	0.0198
014	04611-00400	CIR-CLIP INTERNAL	1				0.005	0.011
015	08101-06203	BEARLNG BALL(6203)	1				0.063	0.1386
016	66811-14670	COLLAR	1				0.039	0.0858
017	04611-00300	CIR-CLIP INTERNAL	1				0.004	0.0088
018	08852-03015	BEARING NEEDLE	1				0.037	0.0814
019	04612-00190	CIR-CLIP EXTERNAL	1				0.001	0.0022
020	66621-14622	GEAR 19-16	1				0.222	0.4884
021	08822-02410	BEARING NEEDLE	1				0.015	0.033
022	62231-14770	COLLAR	2				0	0
023	66621-14642	COLLAR	2				0	0
024	66404-14650	GEAR 22	1				0.18	0.396
025	99999-99999	BLANK	1			ORDER BY REF.No.031 ON L.No.0C04-R0	0	0
026	08211-07204	BEARING BALL(7204B)	1				0.105	0.231
027	04612-00190	CIR-CLIP EXTERNAL	2				0.001	0.0022
028	08151-06304	BEARING BALL(6304NR)	1				0.148	0.3256
029	08101-06304	BEARING BALL(6304)	1				0.146	0.3212
030	66591-14720	SPACER	1				0.002	0.0044
031	66591-14730	BUSH	1				0	0
032	66404-14840	GEAR 13	1				0.059	0.1298
033	66621-14850	GEAR 14-29	1				0.354	0.7788
034	66621-14860	COLLAR	1				0.014	0.0308
035	66591-14770	COLLAR	2				0.003	0.0066
039	66621-14660	COLLAR	1				0.004	0.0088
040	66621-14370	SHIM 1	1				0.001	0.0022
041	66621-14380	SHIM 2	1				0.001	0.0022
042	66591-56910	SHIM 1	1				0.001	0.0022
043	66591-56920	SHIM 2	1				0.001	0.0022
044	66611-14670	SHIM 1	1				0.008	0.0176
045	66611-14680	SHIM 2	1				0.01	0.022
046	66611-14690	SHIM 3	1				0.001	0.0022

silvernorn.co.uk

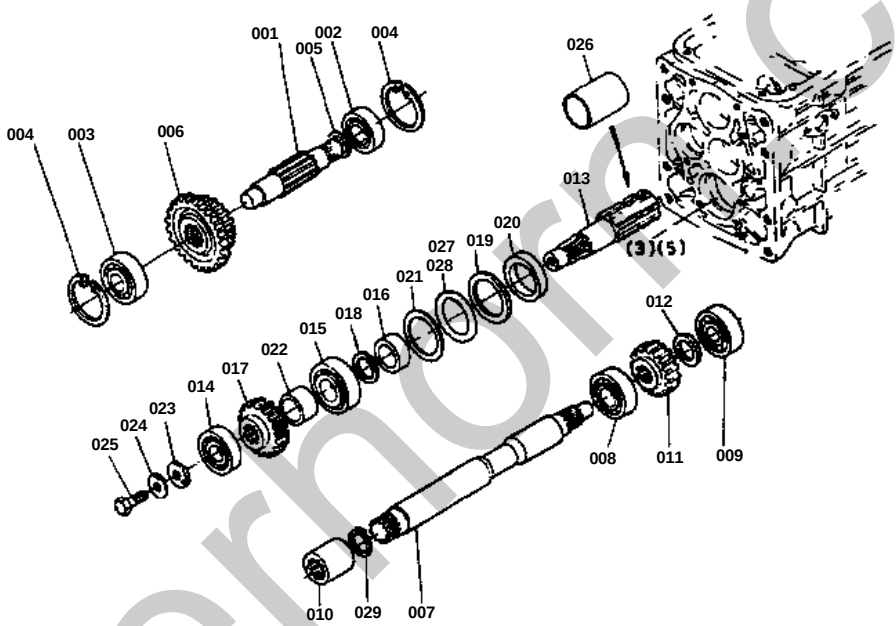

REF. No. 19 66706-1478-2
t : 2 → 1.6mm

REF. No. 26 66706-1481-0
ℓ : 45 → 68mm

REF. No. 17 66494-1492-2
Change width of boss.
20 → 21mm

REF. No. 22 66494-1474-2
Change of length.
17 → 16mm

silvermorr.co.uk

3RD 5TH PTO SHAFT GROUP

↔ Interchangeable; ≠ not interchangeable; ← new for old; → old for new

REF.No	Part No.	Description	Q'ty	S.No.	I/C	REMARKS	Weight (kgf)	Weight (lb)
001	66621-14410	SHAFT 3	1				0.36	0.792
002	08101-06303	BEARING BALL(6303)	1				0.112	0.2464
003	08101-06204	BEARING BALL(6204)	1				0.102	0.2244
004	04611-00470	CIR CLIP INTERNAL	2				0.006	0.0132
005	64135-14290	COLLAR	1				0	0
006	66621-14422	GEAR 18-22	1				0.418	0.9196
007	66621-14710	SHAFT 5	1				0.93	2.046
008	08101-06204	BEARING BALL(6204)	1				0.102	0.2244
009	08101-06303	BEARING BALL(6303)	1				0.112	0.2464
010	66621-14720	BOSS SPLINE	1				0.095	0.209
011	66494-14730	GEAR 17	1				0.17	0.374
012	62081-14260	COLLAR	1				0.005	0.011
013	66706-14710	SHAFT PTO	1				0.61	1.342
014	08711-30204	BEARING(30204)	1				0.116	0.2552
015	08711-30205	BEARING(30205)	1				0.148	0.3256
016	66611-14730	BUSH	1				0.042	0.0924
017	66494-14920	GEAR 25	1	<=16140			0.336	0.7392
017	66494-14922	GEAR 25	1	>=10001			0	0
018	66611-14740	COLLAR	1				0.004	0.0088
019	66706-14780	COLLAR	1	<=16140			0.008	0.0176
019	66706-14782	COLLAR	1	>=10001			0.006	0.0132
020	09180-35488	SEAL OIL	1				0.019	0.0418
021	66611-14750	SHIM	1			0.5MM	0.002	0.0044
022	66494-14740	COLLAR	1	<=16140			0.036	0.0792
022	66494-14742	COLLAR	1	>=10001			0	0
023	66704-14720	WASHER	1				0.009	0.0198
024	63753-32430	WASHER	1				0.001	0.0022
025	66704-14730	BOLT	1				0.012	0.0264
026	66704-14790	COVER	1				0.015	0.033
026	66706-14810	COVER	1	>=10001			0.024	0.0528
027	66611-14760	SHIM 2	1				0.002	0.0044
028	66611-14770	SHIM 3	1				0.001	0.0022
029	04612-00190	CIR-CLIP INTERNAL	1				0.001	0.0022

silverhorn.co.uk

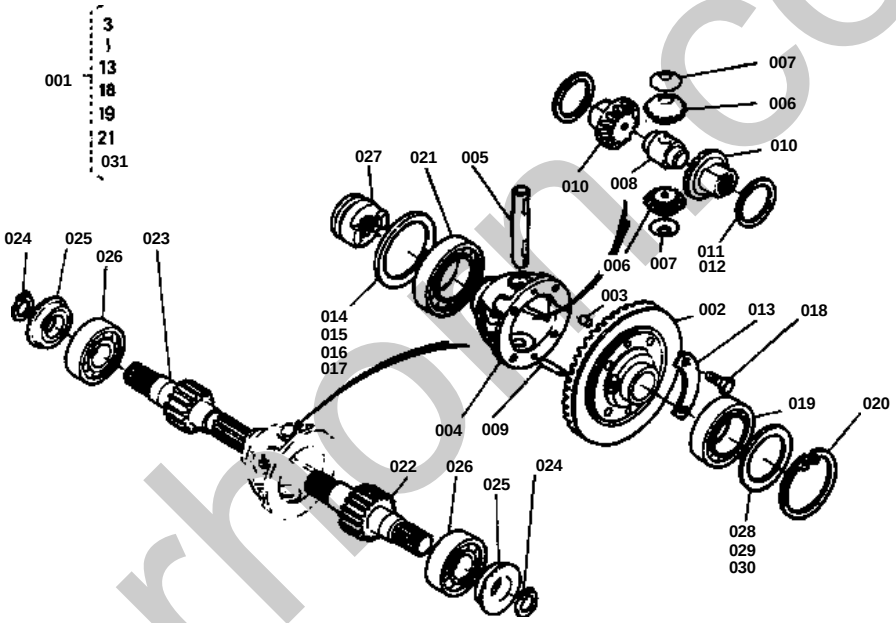

silverhomco.uk

↔ Interchangeable; ≠ not interchangeable; ← new for old; → old for new

REF.No	Part No.	Description	Q'ty	S.No.	I/C	REMARKS	Weight (kgf)	Weight (lb)
001	66494-81100	ASSY DIFF. REAR	1			REF.No.003 TO 013 018 019 021 AND 031	3.55	7.81
002	99999-99999	BLANK	0			ORDER BY REF.No.031	0	0
003	66591-14790	PIN KNOCK	1				0.004	0.0088
004	66591-15110	CASE DIFFERENTIAL	1				0	0
005	66591-14830	SHAFT DIFF PINION	1				0.1	0.22
006	66591-14840	GEAR DIFF PINION	2				0.082	0.1804
007	66591-14850	COLLAR PINION THRUST	2				0.006	0.0132
008	66591-14860	GOLLAR DIFF THRUST	1				0.102	0.2244
009	66591-14783	PIN STRAIGHT	1				0.01	0.022
010	66591-14870	GEAR DIFF SIDE	2				0.18	0.396
011	66591-14880	SHIM	1				0.008	0.0176
012	66591-14890	SHIM	1				0.01	0.022
013	66591-14910	PLATE LOCK	2				0.006	0.0132
014	66591-14920	SHIM DIFF SIDE 1	1				0.006	0.0132
015	66591-14930	SHIM DIFF SIDE 2	1				0.002	0.0044
016	66591-14980	SHIM DIFF SIDE 3	1				0.005	0.011
017	66591-14990	SHIM DIFF SIDE 4	1				0.002	0.0044
018	01156-50820	BOLT	4				0.01	0.022
019	08101-06008	BEARING BALL(6008)	1				0.19	0.418
020	04611-00680	CIR-CLIP INTERNAL	1				0.016	0.0352
021	08101-06009	BEARING BALL(6009)	1				0.22	0.484
022	66494-15210	SHAFT DIFF GEAR LH	1				0.55	1.21
023	66494-15220	SHAFT DITF GEAR RH	1				0.599	1.3178
024	04612-00220	CIR-CLIP EXTERNAL	2				0.001	0.0022
025	66611-14940	SEAL OIL	2				0.02	0.044
026	08101-06305	BEARING BALL(6305)	2				0.23	0.506
027	66591-14962	CLUTCH DIFF LOCK	1				0.148	0.3256
028	66621-15240	SHIM DIFF GEAR 1	1				0.001	0.0022
029	66621-15250	SHIM DIFF GEAR 2	1				0.003	0.0066
030	66621-15260	SHIM DIFF GEAR 3	1				0.006	0.0132
031	66621-82710	ASSY 1 BEVEL GEAR	1			REF.No.002 AND 025 ON L.No.0C02-R0	1.6	3.52

silvermorn.co.uk

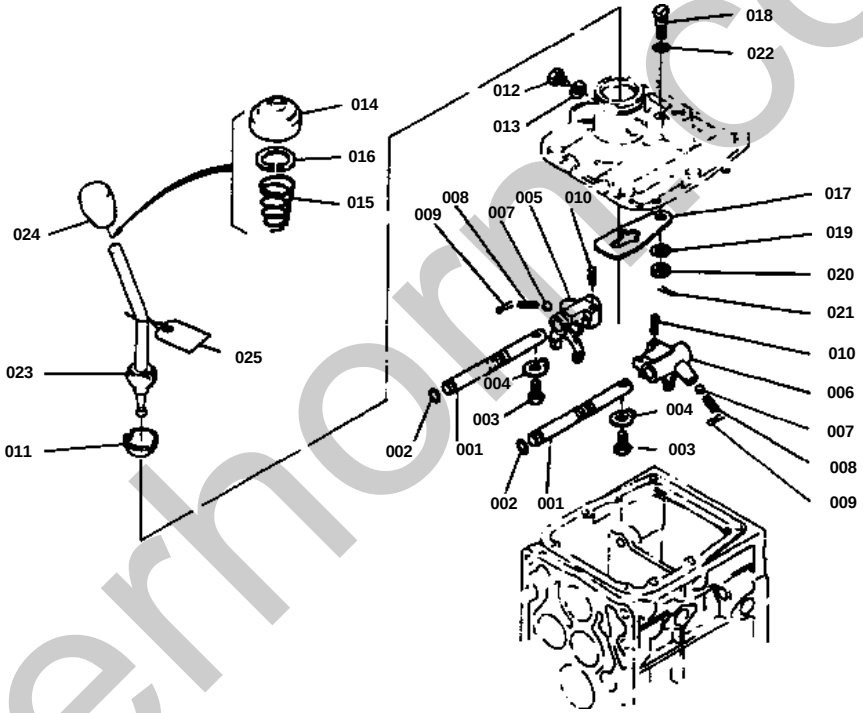

silverhorn.co.uk

MAIN SPEED CHANGE GROUP

↔ Interchangeable; ≠ not interchangeable; ← new for old; → old for new

REF.No	Part No.	Description	Q'ty	S.No.	I/C	REMARKS	Weight (kgf)	Weight (lb)
001	66621-18110	SHAFT FORK	2				0.156	0.3432
002	04811-06100	O RING	2				0.001	0.0022
003	01150-50816	BOLT	2				0.01	0.022
004	04111-50080	WASHER TONGUED	2				0.001	0.0022
005	66621-18130	FORK SHIFT	1				0.193	0.4246
006	66621-18140	FORK SHIFT	1				0.133	0.2926
007	07715-01605	BALL	2				0.003	0.0066
008	62061-18260	SPRING	2				0.002	0.0044
009	05511-50322	PIN SPLIT	2				0.002	0.0044
010	05411-00520	PIN SPRING	2				0.002	0.0044
011	66591-18410	BUSH	1				0.004	0.0088
012	66515-18240	PIN ROD GUIDE	2				0.01	0.022
013	04714-00080	GASKET	2				0.001	0.0022
014	66591-18420	COVER MAIN S-CHANGE	1				0.014	0.0308
015	66591-18430	SPRING LEVER	1				0.024	0.0528
016	04611-00380	CIR-CLIP INTERNAL	1				0.004	0.0088
017	66591-18442	PLATE CHECK	1				0	0
018	66591-18450	BOLT CHECK PLATE	1				0.024	0.0528
019	04011-50100	WASHER PLAIN	1				0.002	0.0044
020	02372-50100	NUT SLOTTED	1				0.005	0.011
021	05511-50218	PIN SPLIT	1				0.001	0.0022
022	04811-10100	O RING	1				0.001	0.0022
023	66711-42320	LEVER MAIN S-CHANGE	1				0.295	0.649
024	66711-42310	GRIP LEVER	1				0.033	0.0726
025	66706-47480	CARD	1				0.001	0.0022

silverhorn.co.uk

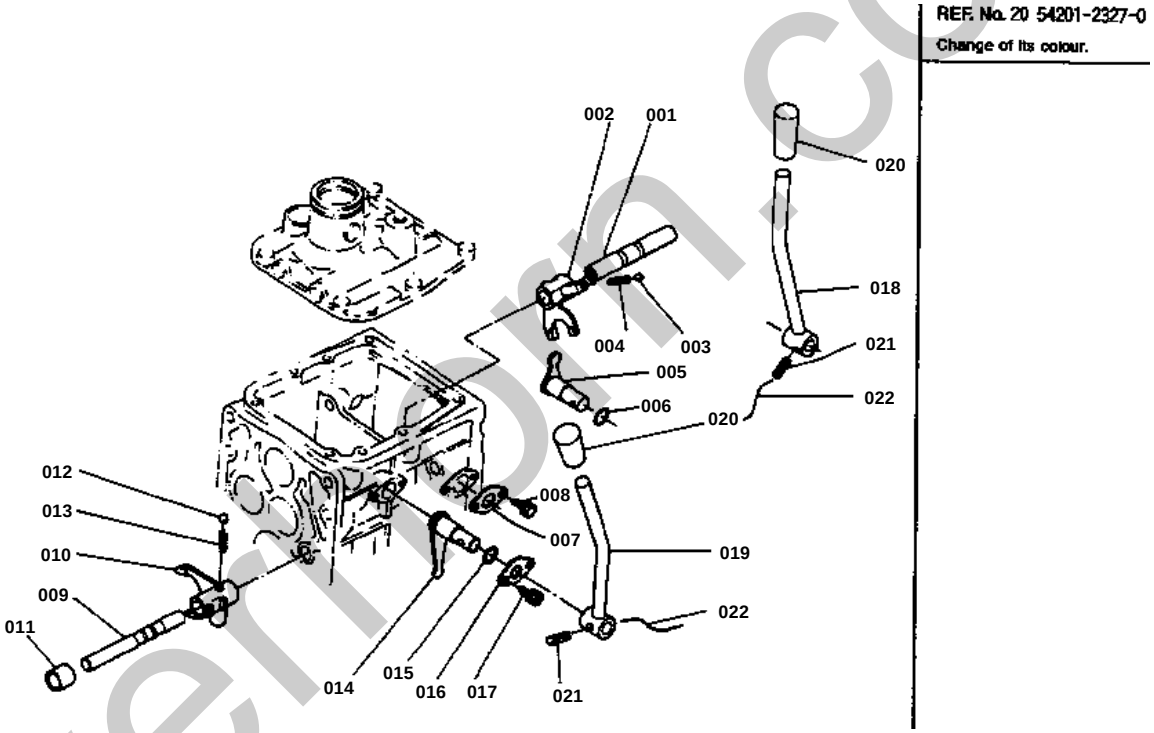

silvermorn.co.uk

↔ Interchangeable; ≠ not interchangeable; ← new for old; → old for new

REF.No	Part No.	Description	Q'ty	S.No.	I/C	REMARKS	Weight (kgf)	Weight (lb)
001	66621-18310	SHAFT FORK	1				0.121	0.2662
002	66621-18320	FORK SHAFT	1				0	0
003	07715-01605	BALL	1				0.003	0.0066
004	62061-18260	SPRING	1				0.002	0.0044
005	66621-18340	ARM AUX S-CHANGE	1				0.093	0.2046
006	04811-00160	O RING	1				0.001	0.0022
007	66591-18180	HOLDER FORK ROD	1				0.012	0.0264
008	01202-50614	BOLT	2				0.006	0.0132
009	66621-18410	SHAFT FORK	1				0.144	0.3168
010	66621-18420	FORK SHAFT	1				0.138	0.3036
011	66621-18430	COLLAR	1				0.02	0.044
012	07715-01605	BALL	1				0.003	0.0066
013	62061-18260	SPRING	1				0.002	0.0044
014	66621-18450	ARM AUX S-CHANGE	1				0.11	0.242
015	04811-00160	O RING	1				0.001	0.0022
016	66591-18180	HOLDER FORK ROD 1	1				0.012	0.0264
017	01202-50614	BOLT	2				0.006	0.0132
018	66621-42130	LEVER AUX S-CHANGE	1				0.228	0.5016
019	66621-42140	LEVER	1				0.207	0.4554
020	66591-42110	GRIP LEVER	2	<=16576			0.02	0.044
020	54201-23270	GRIP LEVER	2	>=10001			0.02	0.044
021	05411-00622	PIN SPRING	2				0.003	0.0066
022	99999-99999	BLANK	0			OBTAINED LOCALLY	0	0

silverhorn.co.uk

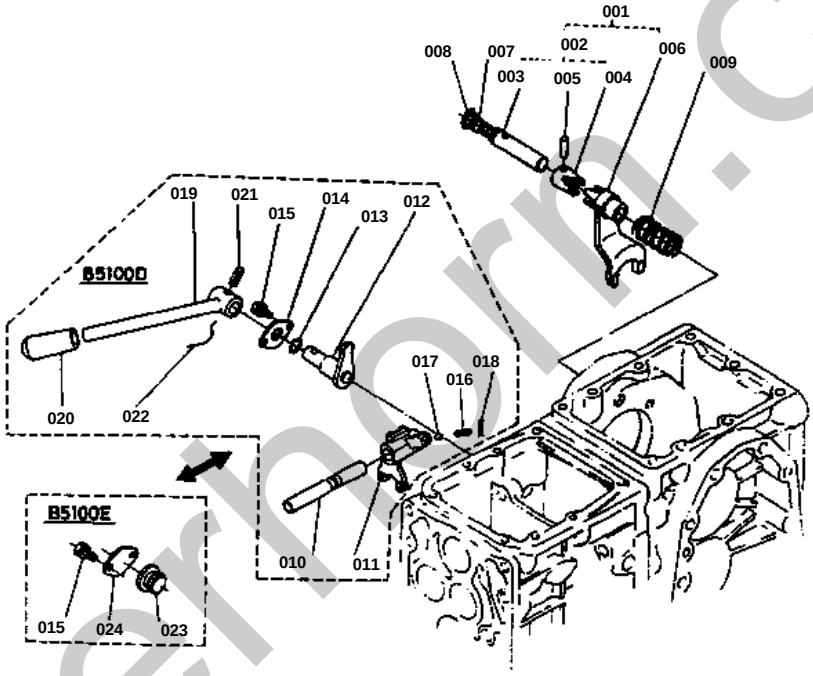

REF. No. 20 54201-2327-0

Change of its colour.

silvernorn.co.uk

↔ Interchangeable; ≠ not interchangeable; ← new for old; → old for new

REF.No	Part No.	Description	Q'ty	S.No.	I/C	REMARKS	Weight (kgf)	Weight (lb)
001	66621-18500	ASSY CAM FORK	1			REF.No.002 006	0.3	0.66
002	66621-18510	ASSY ROD FORK	1			REF.No.003 TO 005	0.126	0.2772
003	66621-18520	ROD FORK	1				0.1	0.22
004	66591-18290	CAM DIFF LOCK	1				0.022	0.0484
005	05012-00425	PIN STRAIGHT	1				0.003	0.0066
006	66621-18540	FORK SHIFT	1				0.16	0.352
007	04811-10120	O RING	1				0.001	0.0022
008	04612-00110	CIR-CLIP EXTERNAL	1				0.001	0.0022
009	66591-18320	SPRING	1				0.02	0.044
010	66621-18610	SHAFT FORK	1				0.12	0.264
011	66621-18620	FORK SHIFT	1				0.127	0.2794
012	66621-18630	ARM FRONT DRIVE	1				0.09	0.198
013	04811-00160	O RING	1				0.001	0.0022
014	66591-18180	HOLDER FORK ROD 1	1				0.012	0.0264
015	01202-50614	BOLT	2				0.006	0.0132
016	62061-18260	SPRING	1				0.002	0.0044
017	07715-01605	BALL	1				0.003	0.0066
018	05511-50320	PIN SPLIT	1				0.002	0.0044
019	66621-42150	LEVER FRONT DRIVE	1				0	0
020	66591-42110	GRIP LEVER	1	<=16576			0.02	0.044
020	54201-23270	GRIP LEVER	1	>=10001			0.02	0.044
021	05412-00622	PIN SPRING	1				0	0
022	99999-99999	BLANK	1			WIRE OBTAINED LOCALLY	0	0

silverhorn.co.uk

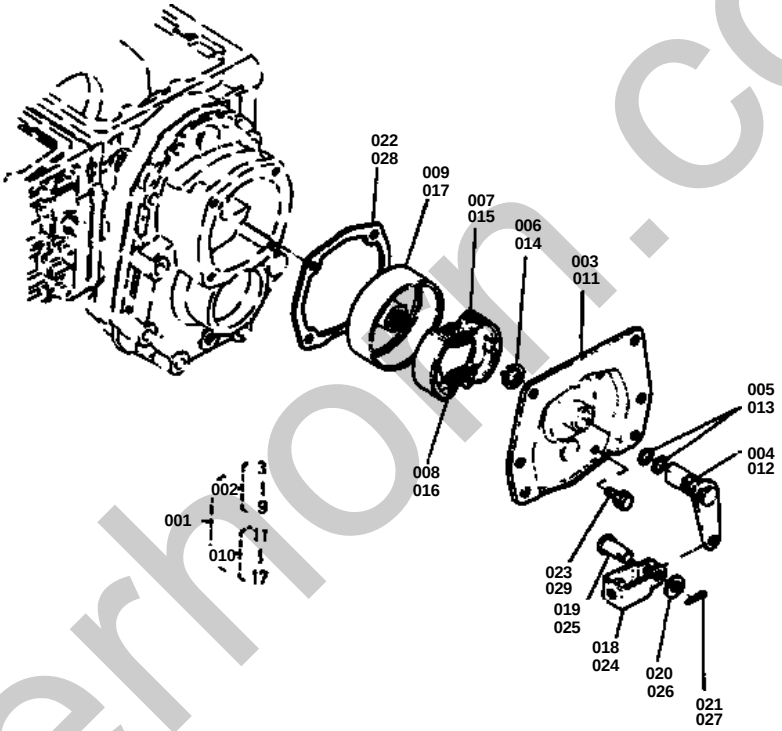

silverhorn.co.uk

↔ Interchangeable; ≠ not interchangeable; ← new for old; → old for new

REF.No	Part No.	Description	Q'ty	S.No.	I/C	REMARKS	Weight (kgf)	Weight (lb)
001	66811-22100	ASSY BRAKE	1			REF.No.002 010	3.6	7.92
002	66811-22200	ASSY BRAKE LH	1			REF.No.003 TO 009	0	0
003	66811-22310	COVER BRAKE LH	1				0.75	1.65
004	66621-22320	CAM BRAKE LH	1				0.205	0.451
005	04811-05170	O RING	2				0.001	0.0022
006	04612-00200	CIR-CLIP EXTERNAL	1				0.001	0.0022
007	66611-22340	SHOE BRAKE	2				0	0
008	66591-22350	SPRING RETURN	2				0.003	0.0066
009	66811-22360	DRUM BRAKE	1				0.9	1.98
010	66811-22400	ASSY BRAKE RH	1			REF.No.011 TO 017	0	0
011	66811-22410	COVER BRAKE RH	1				0.798	1.7556
012	66621-22420	CAM BRAKE RH	1				0.2	0.44
013	04811-05170	O RING	2				0.001	0.0022
014	04612-00200	CIR-CLIP EXTERNAL	1				0.001	0.0022
015	66611-22340	SHOE BRAKE	2				0	0
016	66591-22350	SPRING RETURN	2				0.003	0.0066
017	66811-22360	DRUM BRAKE	1				0.9	1.98
018	63753-42350	METAL MAIN CLUTCH	1				0.038	0.0836
019	05122-50820	PIN JOINT	1				0.009	0.0198
020	04012-50080	WASHER PLAIN	1				0.001	0.0022
021	05511-50215	PIN SPLIT	1				0.001	0.0022
022	66621-22380	GASKET	1				0	0
023	01120-50822	BOLT	4				0	0
024	63753-42350	METAL MAIN CLUTCH	1				0.038	0.0836
025	05122-50820	PIN JOINT	1				0.009	0.0198
026	04012-50080	WASHER PLAIN	1				0.001	0.0022
027	05511-50215	PIN SPLIT	1				0.001	0.0022
028	66621-22380	GASKET	1				0	0
029	01120-50822	BOLT	4				0	0

silverhorn.co.uk

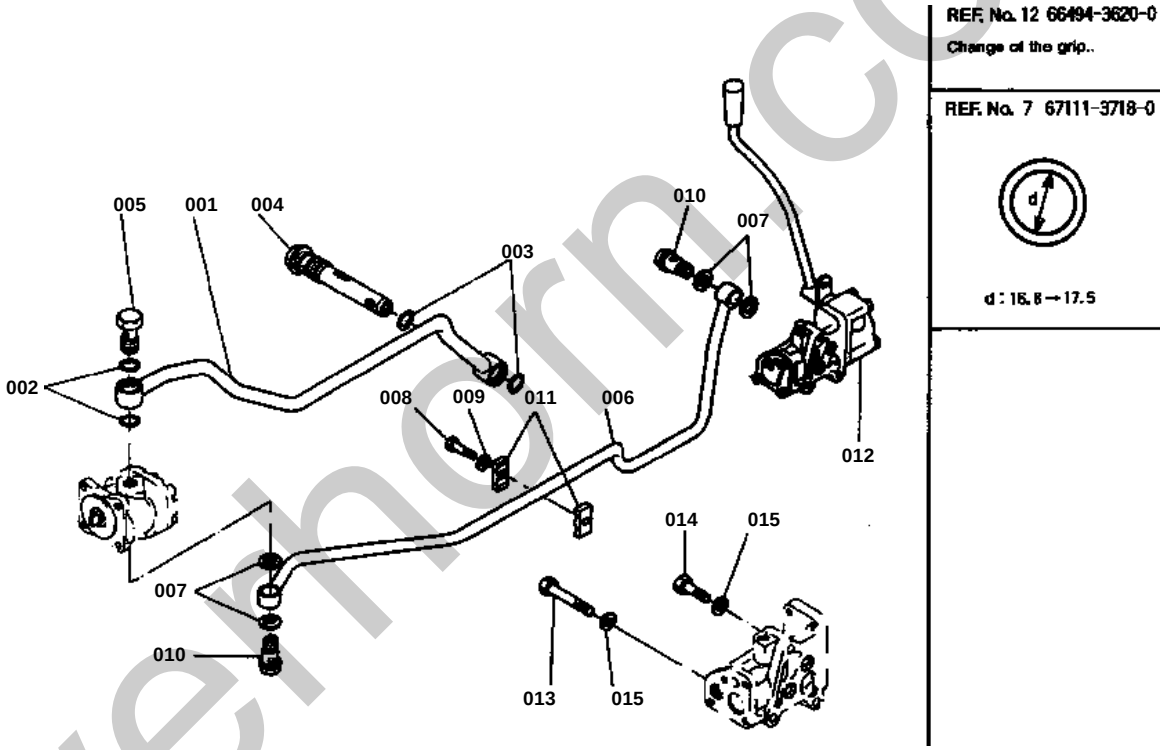

silverhorn.co.uk

OIL PRESSURE PIPE GROUP

↔ Interchangeable; ≠ not interchangeable; ← new for old; → old for new

REF.No	Part No.	Description	Q'ty	S.No.	I/C	REMARKS	Weight (kgf)	Weight (lb)
001	66811-36110	PIPE INLET	1				0.635	1.397
002	04811-00220	O RING	2				0.001	0.0022
003	04811-10300	O RING	2				0.001	0.0022
004	66591-36224	FILTER OIL	1				0.188	0.4136
005	32170-38170	BOLT EYE JOINT	1				0.09	0.198
006	66811-36150	PIPE DELIVERY	1				0.545	1.199
007	04714-00300	GASKET	4				0.002	0.0044
007	67111-37180	GASKET	4	>=10001			0.003	0.0066
008	01050-50645	BOLT	1				0.011	0.0242
009	04015-50060	WASHER PLAIN	1				0	0
010	54203-36150	PIPE JOINT	2				0.079	0.1738
011	66711-36140	CLAMP PIPE	2				0.007	0.0154
012	66811-36200	ASSY VALVE CONTROL	1	<=16576			0	0
012	66494-36200	ASSY VALVE CONTROL	1	>=10001			0	0
013	01150-50875	BOLT	2				0	0
014	01150-50845	BOLT	1				0.019	0.0418
015	04512-50080	WASHER SPRING	3				0.001	0.0022

silverhorn.co.uk

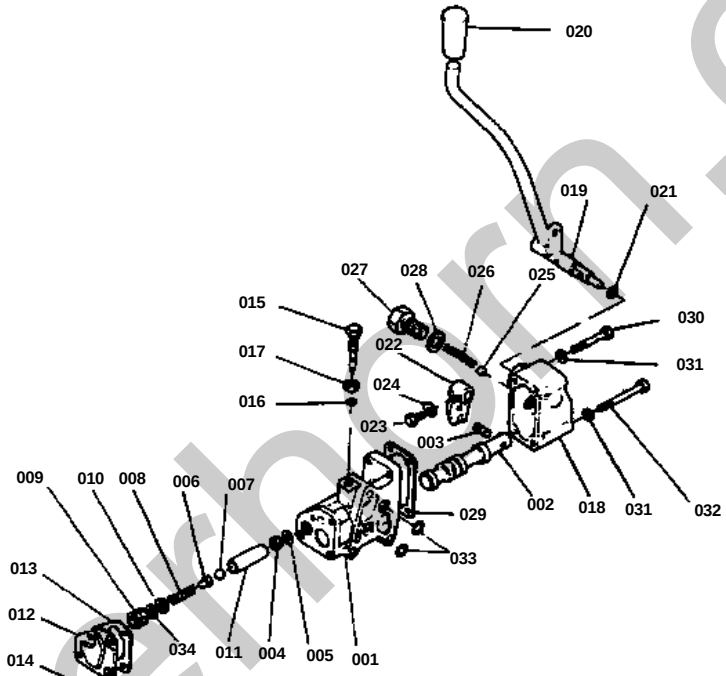

REF.No. 20 54201-2327-0
Change of its colour.

REF.No. 11 66591-3637-2

D : 13→13$^{+0.5}_{0}$ mm

silverthorn.co.uk

↔ Interchangeable; ≠ not interchangeable; ← new for old; → old for new

REF.No	Part No.	Description	Q'ty	S.No.	I/C	REMARKS	Weight (kgf)	Weight (lb)
001	99999-99999	BLANK	0			ORDER BY REF.No.012 ON L.No.0C07-L0	0	0
002	99999-99999	BLANK	0			ORDER BY REF.No.012 ON L.No.0C07-L0	0	0
003	05411-00620	PIN SPRING	1				0.002	0.0044
004	66591-36330	HOLDER	1				0.008	0.0176
005	04811-15120	O RING	1				0.001	0.0022
006	66611-36222	RETAINER SPRING	1				0.008	0.0176
007	07115-03211	BALL	1				0	0
008	66591-36350	SPRING	1				0.01	0.022
009	66591-36360	SCREW	1				0.012	0.0264
010	04012-50060	WASHER PLAIN	1				0.001	0.0022
011	66591-36370	COLLAR	1	<=16918			0.016	0.0352
011	66591-36372	COLLAR	1	>=10001			0	0
012	66591-36380	COVER RELIEF	1				0.067	0.1474
013	66591-36390	GASKET	1				0	0
014	01202-50616	BOLT	4				0.006	0.0132
015	66591-36413	BOLT ADJUSTING	1				0.028	0.0616
016	04811-10040	O RING	1				0.001	0.0022
017	02112-50100	NUT	1				0.004	0.0088
018	66591-36430	COVER VALVE	1				0.18	0.396
019	66711-36250	LEVER CONTROL	1				0.392	0.8624
020	66591-42110	GRIP LEVER	1	<=16576			0.02	0.044
020	54201-23270	GRIP LEVER	1	>=10001			0.02	0.044
021	04811-00100	O RING	1				0.001	0.0022
022	66591-36450	ARM VALVE GUIDE	1				0.05	0.11
023	66591-36480	BOLT	1				0.004	0.0088
024	04111-50060	WASHER TONGUED	1				0.001	0.0022
025	07715-00803	BALL	1				0.004	0.0088
026	62061-18270	SPRING	1				0.003	0.0066
027	66591-36460	BOLT	1				0.054	0.1188
028	04714-00300	GASKET	1				0.002	0.0044
029	66591-36470	GASKET VALVE COVER	1				0	0
030	01050-50650	BOLT	2				0.012	0.0264
031	04512-50060	WASHER SPRING	4				0	0
032	01050-50665	BOLT	2				0.014	0.0308
033	04811-00120	O RING	2				0.001	0.0022
034	66611-36330	SHIM	1				0.001	0.0022

silvermorn.co.uk

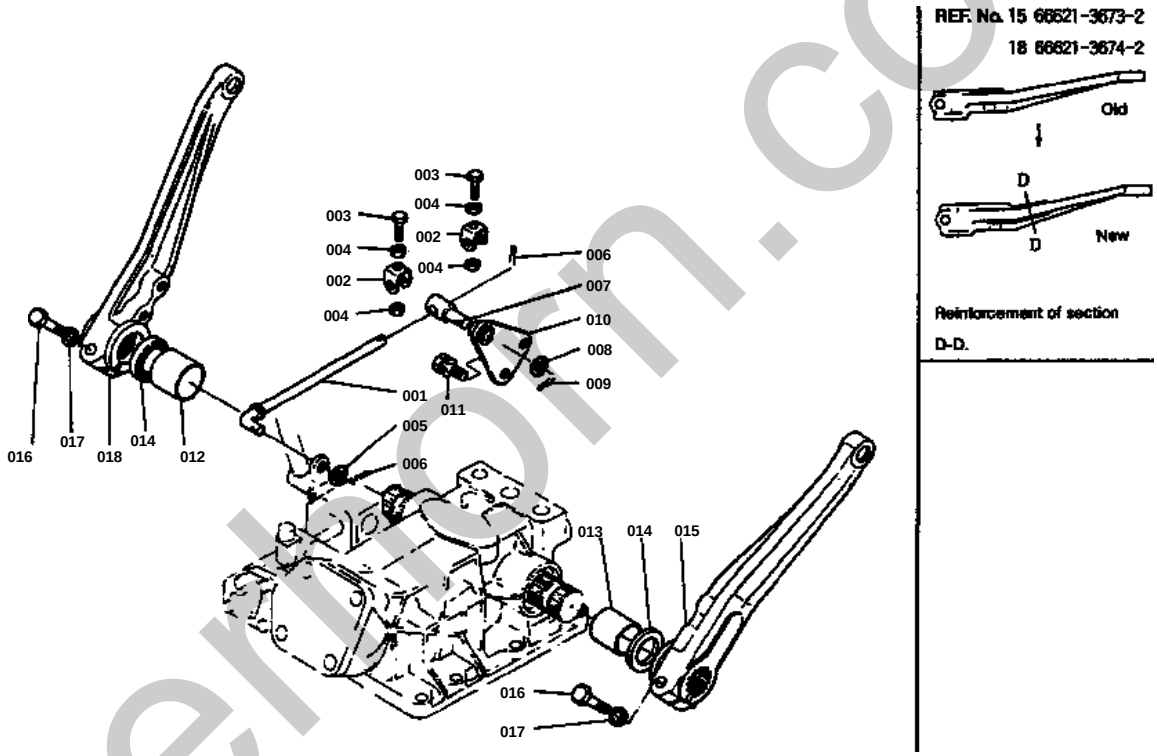

silverthorn.co.uk

↔ Interchangeable; ≠ not interchangeable; ← new for old; → old for new

REF.No	Part No.	Description	Q'ty	S.No.	I/C	REMARKS	Weight (kgf)	Weight (lb)
001	66494-36510	ROD CHECK	1				0.074	0.1628
002	66611-36320	INTERLOCKER	2				0.022	0.0484
003	01153-50822	BOLT	2				0.011	0.0242
004	02112-50080	NUT	4				0.003	0.0066
005	04012-50080	WASHER PLAIN	1				0.001	0.0022
006	05511-50215	PIN SPLIT	2				0.001	0.0022
007	66591-36540	SHAFT	1				0.034	0.0748
008	04011-50100	WASHER PLAIN	1				0.002	0.0044
009	05511-50318	PIN SPLIT	1				0.001	0.0022
010	66591-36550	HOLDER	1				0.072	0.1584
011	01120-50822	BOLT	2				0	0
012	66591-36710	BUSH	1				0.049	0.1078
013	66591-36720	BUSH	1				0.044	0.0968
014	09230-28405	SEAL OIL	2				0.006	0.0132
015	66621-36730	ARM LIFT LH	1	<=10865			1.22	2.684
015	66621-36732	ARM LIFT LH	1	>=10001			0	0
016	01153-51045	BOLT	2				0.031	0.0682
017	04512-50100	WASHER SPRING	2				0	0
018	66621-36740	ARM LIFT RH	1	<=10865			1.15	2.53
018	66621-36742	ARM LIFT RH	1	>=10001			0	0

silverhorn.co.uk

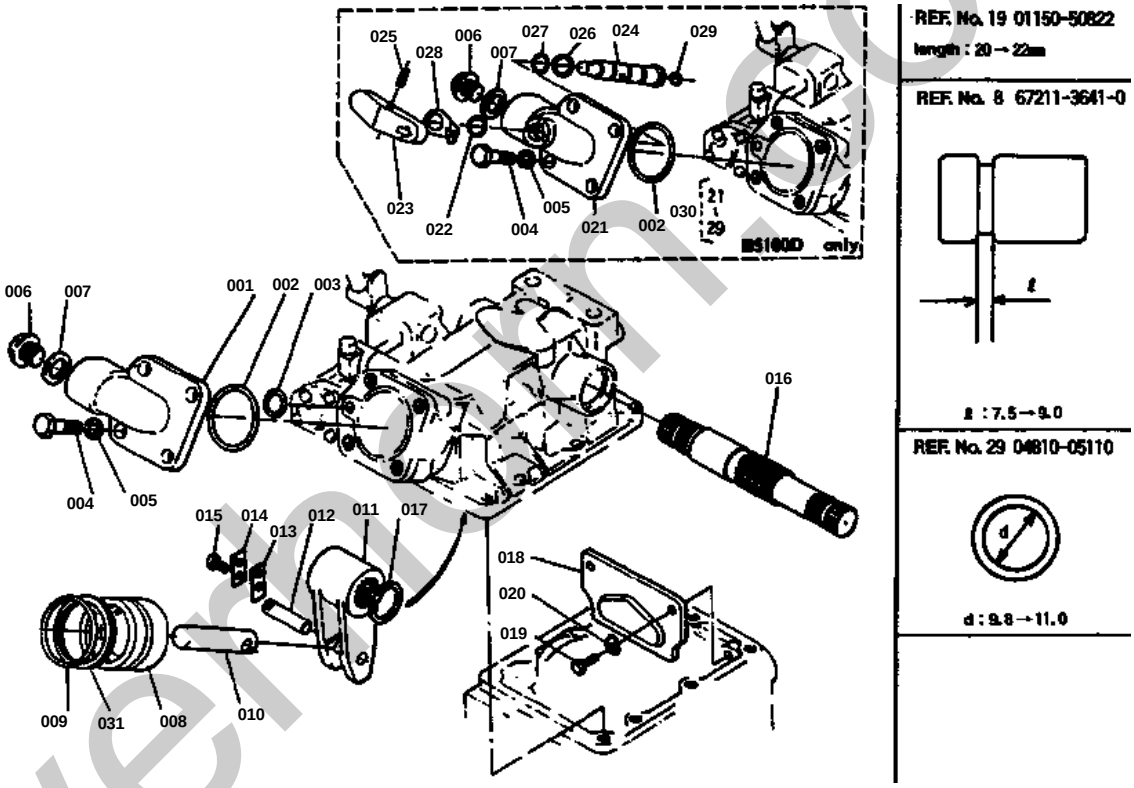

silvermachine.co.uk

↔ Interchangeable; ≠ not interchangeable; ← new for old; → old for new

REF.No	Part No.	Description	Q'ty	S.No.	I/C	REMARKS	Weight (kgf)	Weight (lb)
003	04811-00080	O RING	1				0.001	0.0022
004	66711-36440	BOLT	2				0.045	0.099
005	04512-50120	WASHER SPRING	2				0.003	0.0066
006	06311-25040	PLUG	1				0.09	0.198
007	66611-36420	GASKET	1				0.006	0.0132
008	66591-36630	PISTON OIL PRESSURE	1				0.55	1.21
008	67211-36410	PISTON OIL PRESSURE	1				0.55	1.21
009	04810-08500	O RING	1				0.005	0.011
010	66591-36640	ROD O/P PISTON	1				0.31	0.682
011	66591-36554	ARM OIL PRESSURE	1				0	0
012	66591-36660	PIN ARM	1				0.045	0.099
013	66591-36670	PLATE LOCK	1				0.01	0.022
014	66591-36680	WASHER LOCK	1				0.002	0.0044
015	01050-50612	BOLT	2				0.005	0.011
016	66591-36690	SHAFT O/P ARM	1				0	0
017	04612-00320	CIR-CLIP EXTERNAL	1				0.004	0.0088
018	66621-36750	PLATE O/P ARM	1				0.34	0.748
019	01150-50820	BOLT	2				0.011	0.0242
019	01150-50822	BOLT	2	>=10001			0.012	0.0264
020	04111-50080	WASHER TONGUED	2				0.001	0.0022
021	96319-01410	CAP CYLINDER	1				1.02	2.244
022	04811-00160	O RING	1				0.001	0.0022
023	96319-01450	GRIP	1				0.04	0.088
024	99999-99999	BLANK	0			ORDER BY REF.No.029	0	0
025	05411-00520	PIN SPRING	1				0.002	0.0044
026	96319-01430	WASHER THRUST	1				0.002	0.0044
027	04811-00120	O RING	1				0.001	0.0022
028	96319-01440	SPRING	1				0.002	0.0044
029	04811-00080	O RING	1				0.001	0.0022
029	04811-00100	O RING	1				0.001	0.0022
029	04810-05110	O RING	1				0.001	0.0022
030	66404-36600	ASSY CAP CYLINDER	1			REF.No.021 TO 029	1.17	2.574
031	67211-36420	RING	1				0.003	0.0066

silvermorn.co.uk

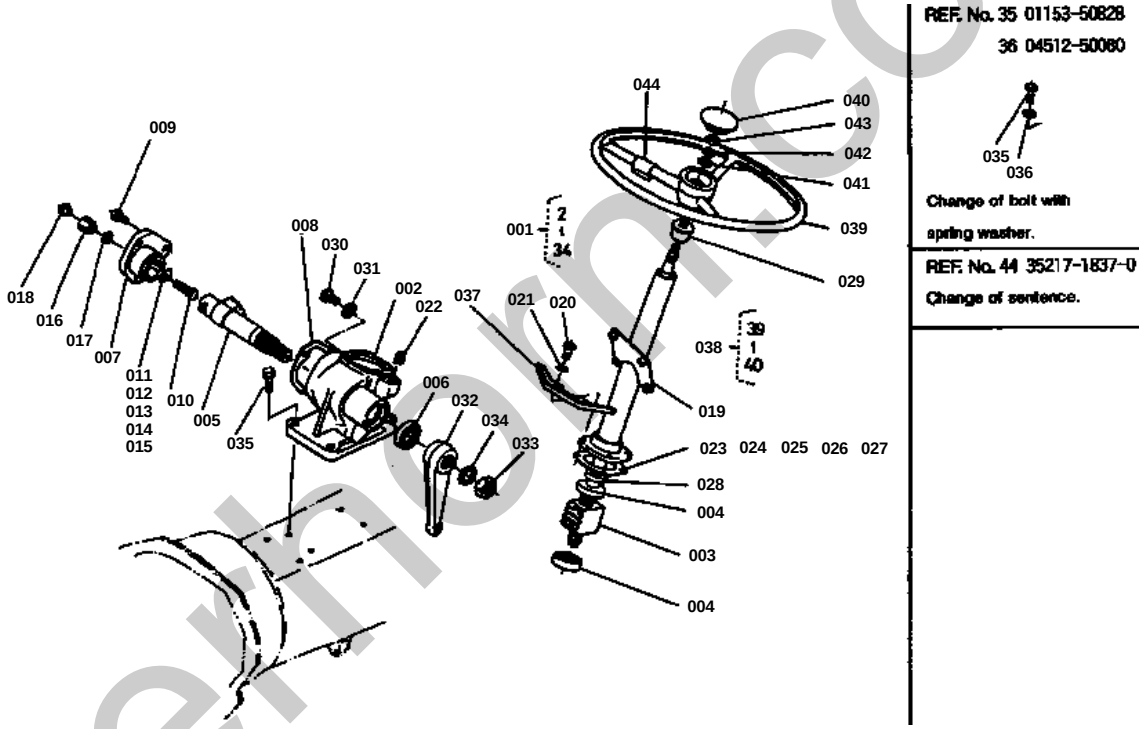

silverhomes.co.uk

↔ Interchangeable; ≠ not interchangeable; ← new for old; → old for new

REF.No	Part No.	Description	Q'ty	S.No.	I/C	REMARKS	Weight (kgf)	Weight (lb)
001	66811-41100	ASSY STEERING	1			REF.No.002 TO 034	6.2	13.64
002	66811-41110	CASE STEERING GEAR	1				0	0
003	66811-41200	ASSY NUT BALL	1				1.11	2.442
004	66811-41140	BEARING THRUST BALL	2				0.045	0.099
005	66811-41150	SHAFT SECTOR	1				0.52	1.144
006	09500-22358	SEAL OIL	1				0.01	0.022
007	66811-41160	COVER SIDE	1				0.3	0.66
008	66811-41170	GASKET	1				0	0
009	01120-50822	BOLT	3				0	0
010	66811-41180	SCREW ADJUSTING	1				0.013	0.0286
011	66811-41190	COLLAR ADJUSTING 1	1				0.002	0.0044
012	66811-41210	COLLAR ADJUSTING 2	1				0.001	0.0022
013	66811-41220	COLLAR ADJUSTING 3	1				0.001	0.0022
014	66811-41230	COLLAR ADJUSTING 4	1				0.001	0.0022
015	66811-41240	COLLAR ADJUSTING 5	1				0.001	0.0022
016	66811-41250	NUT	1				0.027	0.0594
017	04714-00080	GASKET	1				0.001	0.0022
018	61011-18140	PLUG	1				0.002	0.0044
019	66811-41310	POST STEERING	1				1.1	2.42
020	01153-50820	BOLT	4				0.012	0.0264
021	04512-50080	WASHER SPRING	4				0.001	0.0022
022	34150-16640	PLUG	1				0.015	0.033
023	66811-41320	SHIM 1	1				0.001	0.0022
024	66811-41330	SHIM 2	1				0	0
025	66811-41340	SHIM 3	1				0.001	0.0022
026	66811-41350	SHIM 4	1				0.001	0.0022
027	66811-41360	SHIM 5	1				0.003	0.0066
028	09500-16287	SEAL OIL	1				0.01	0.022
029	66591-41250	BUSH POST	1				0.016	0.0352
030	06331-35010	PLUG	1				0.012	0.0264
031	04717-01000	WASHER SEAL	1				0.001	0.0022
032	66811-41410	ARM PITMAN	1				0.38	0.836
033	02172-50160	NUT	1				0.017	0.0374
034	04512-50160	WASHER SPRING	1				0	0
035	01153-50828	BOLT	4				0.014	0.0308
035	01124-50828	BOLT	4	>=10001			0.011	0.0242
036	04512-50080	WASHER SPRING	4				0.001	0.0022
037	66711-41130	HOOK SPRING	1				0.11	0.242
038	66611-41400	ASSY WHEEL STEERING	1			REF.No.039 040	0	0
039	99999-99999	BLANK	0			ORDER BY REF.No.038	0	0
040	66611-41420	CAP STEERING WHEEL	1				0.026	0.0572
041	04013-50120	WASHER PLAIN	1				0	0
042	04512-50120	WASHER SPRING	1				0.003	0.0066
043	02172-50120	NUT	1				0.01	0.022
044	34209-18370	LABEL	1				0.001	0.0022
044	35217-18370	LABEL	1	>=10001			0.001	0.0022

silverthorn.co.uk

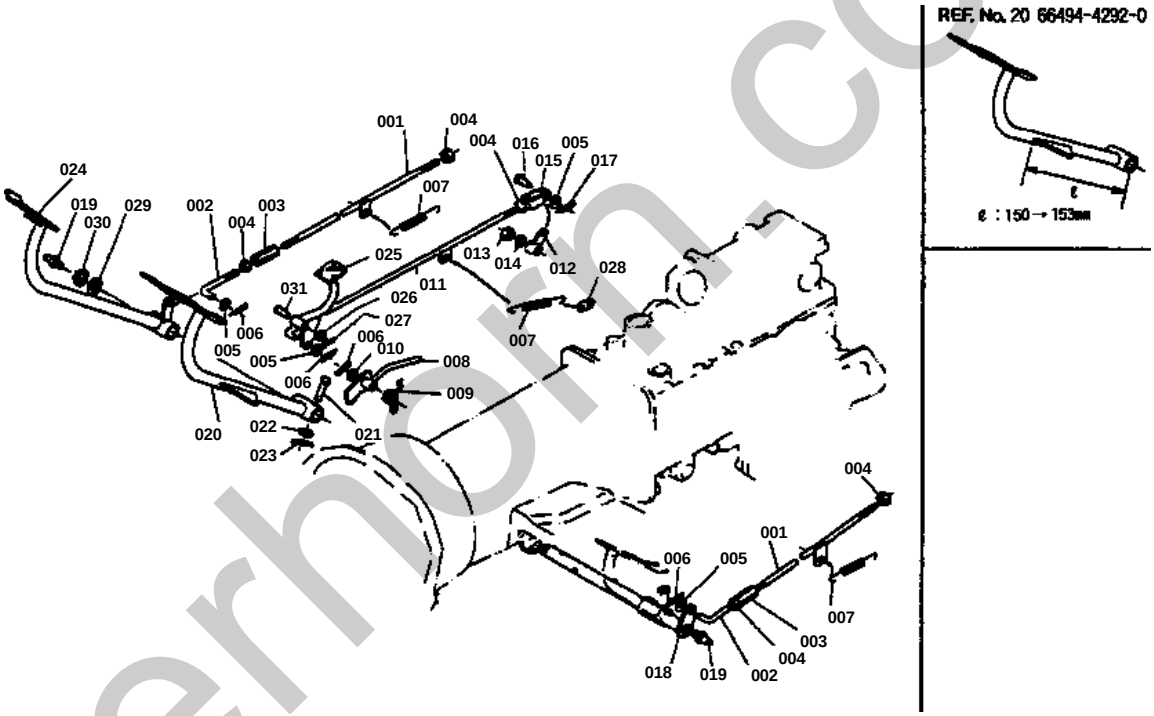

silverhorn.co.uk

BRAKE ROD GROUP

↔ Interchangeable; ≠ not interchangeable; ← new for old; → old for new

REF.No	Part No.	Description	Q'ty	S.No.	I/C	REMARKS	Weight (kgf)	Weight (lb)
001	66621-43260	ROD BRAKE	2				0.208	0.4576
002	66621-43250	ROD BRAKE FRONT	2				0.024	0.0528
003	66591-42410	TURNBUCKLE	2				0.046	0.1012
004	02112-50080	NUT	5				0.003	0.0066
005	04012-50080	WASHER PLAIN	2				0.001	0.0022
006	05511-50318	PIPE SPLIT	4				0.001	0.0022
007	66621-43270	SPRING	3				0.04	0.088
008	66711-42850	LEVER BRAKE LOCK	1				0.116	0.2552
009	66711-42860	SPRING	1				0.005	0.011
010	04011-50100	WASHER PLAIN	1				0.002	0.0044
011	66621-43320	ROD DIFF LOCK	1				0.232	0.5104
012	66621-43340	LEVER DIFF LOCK	1				0	0
013	02118-50100	NUT	1				0.005	0.011
014	04512-50100	WASHER SPRING	1				0	0
015	63753-42350	METAL MAIN CLUTCH	1				0.038	0.0836
016	05122-50820	PIN JOINT	1				0.009	0.0198
017	05511-50215	PIN SPLIT	1				0.001	0.0022
018	66711-42910	SHAFT BRAKE PEDAL	1				1.26	2.772
019	06613-10010	NIPPLE GREASE	2				0.006	0.0132
020	66711-42920	PEDAL BRAKE LH	1	<=16140			0.938	2.0636
020	66494-42920	PEDAL BRAKE LH	1	>=10001			0.926	2.0372
021	05112-50840	PIN JOINT	1				0.017	0.0374
022	04012-50080	WASHER PLAIN	3				0.001	0.0022
023	05511-50215	PIN SPLIT	1				0.001	0.0022
024	66711-42930	PEDAL BRAKE RH	1				0.89	1.958
025	66711-42950	PEDAL DIFF LOCK	1				0.325	0.715
026	04011-50140	WASHER PLAIN	1				0.007	0.0154
027	05511-50425	PIN SPLIT	1				0.003	0.0066
028	66621-43350	HOLDER SPRING	1				0	0
029	66591-43233	COLLAR	1				0.004	0.0088
030	04612-50240	CIR-CLIP EXTERNAL	1				0	0
031	05112-51450	PIN JOINT	1				0.064	0.1408

silvermorn.co.uk

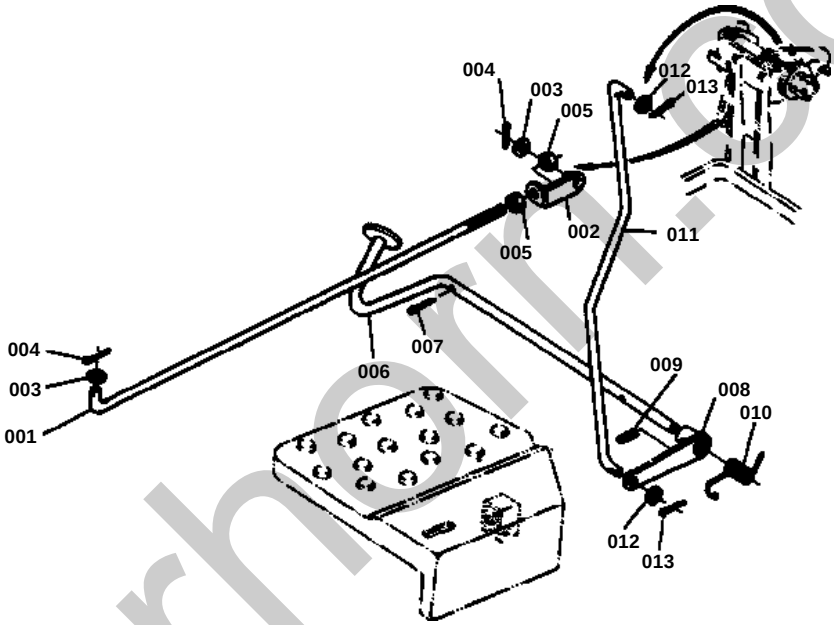

silverhorn.co.uk

ACCELERATOR PEDAL GROUP

↔ Interchangeable; ≠ not interchangeable; ← new for old; → old for new

REF.No	Part No.	Description	Q'ty	S.No.	I/C	REMARKS	Weight (kgf)	Weight (lb)
001	66811-43410	ROD RELEASE	1				0.106	0.2332
002	66711-43220	METAL	1				0.023	0.0506
003	04013-50060	WASHER PLAIT	2				0	0
004	05511-51612	PIN SPLIT	2				0.001	0.0022
005	02014-50060	NUT	2				0.003	0.0066
006	66711-43410	PEDAL ACCELERATOR	1				0.17	0.374
007	05511-50318	PIN SPLIT	1				0.001	0.0022
008	66711-43420	FULCRUM ACCEL. PEDAL	1				0.048	0.1056
009	05411-00314	PIN SPRING	1				0.001	0.0022
010	66711-43430	SPRING ACCELE. PEDAL	1				0.005	0.011
011	66811-43430	ROD ACCELE. PEDAL	1				0.085	0.187
011	66404-43430	ROD ACCELE. PEDAL	1				0.08	0.176
012	04013-50060	WASHER PLAIN	2				0	0
013	05511-51612	PIN SPLIT	2				0.001	0.0022

silverhorn.co.uk

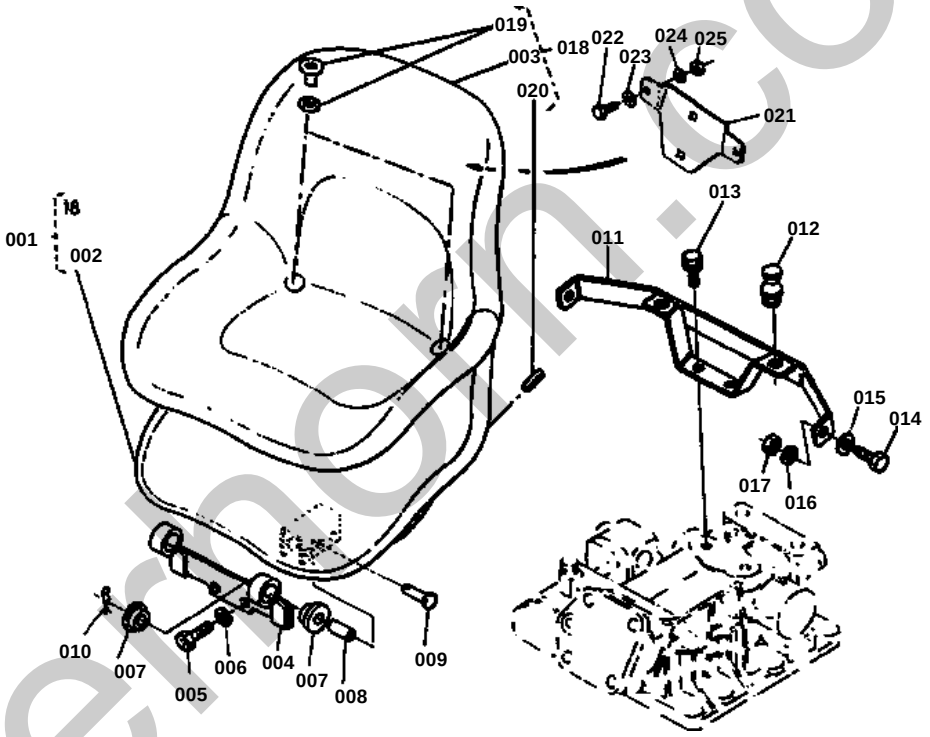

silvermorn.co.uk

SEAT GROUP

↔ Interchangeable; ≠ not interchangeable; ← new for old; → old for new

REF.No	Part No.	Description	Q'ty	S.No.	I/C	REMARKS	Weight (kgf)	Weight (lb)
001	66711-45902	ASSY SEAT	1			REF.No.002 003.	0	0
002	99999-99999	BLANK	0			ORDER BY REF.No.001	0	0
003	99999-99999	BLANK	0			ORDER BY REF.No.018 OR 001	0	0
004	66811-45930	SUPPORT SEAT FRONT	1				0.715	1.573
005	66711-36440	BOLT	2				0.045	0.099
006	04512-50120	WASHER SPRING	2				0.003	0.0066
007	66591-41540	CUSHION	4				0.01	0.022
008	66591-41550	COLLAR	2				0.02	0.044
009	05122-51045	PIN JOINT	2				0	0
010	05516-51000	PIN SNAP	2				0	0
011	66811-45940	SUPPORT SEAT REAR	1				0.597	1.3134
012	32240-18440	CUSHION SEAT	2				0.043	0.0946
013	01120-50820	BOLT	2				0	0
014	01150-50816	BOLT	2				0.01	0.022
015	04013-50080	WASHER PLAIN	2				0	0
016	04512-50080	WASHER SPRING	2				0.001	0.0022
017	02114-50080	NUT	2				0.005	0.011
018	66704-83500	ASSY COVER SEAT	1			REF.No.003 019 AND 020	0.4	0.88
019	35110-85050	EYE-LET	4			TWO PIECES ARE SPARE.	0.005	0.011
020	35110-85060	PROTECTOR	3				0.01	0.022
021	66704-54950	BRACKET SMV	1				0	0
022	01050-50616	BOLT	2				0	0
023	04013-50060	WASHER PLAIN	2				0	0
024	04512-50060	WASHER SPRING	2				0	0
025	02014-50060	NUT	2				0.003	0.0066

silverhorn.co.uk

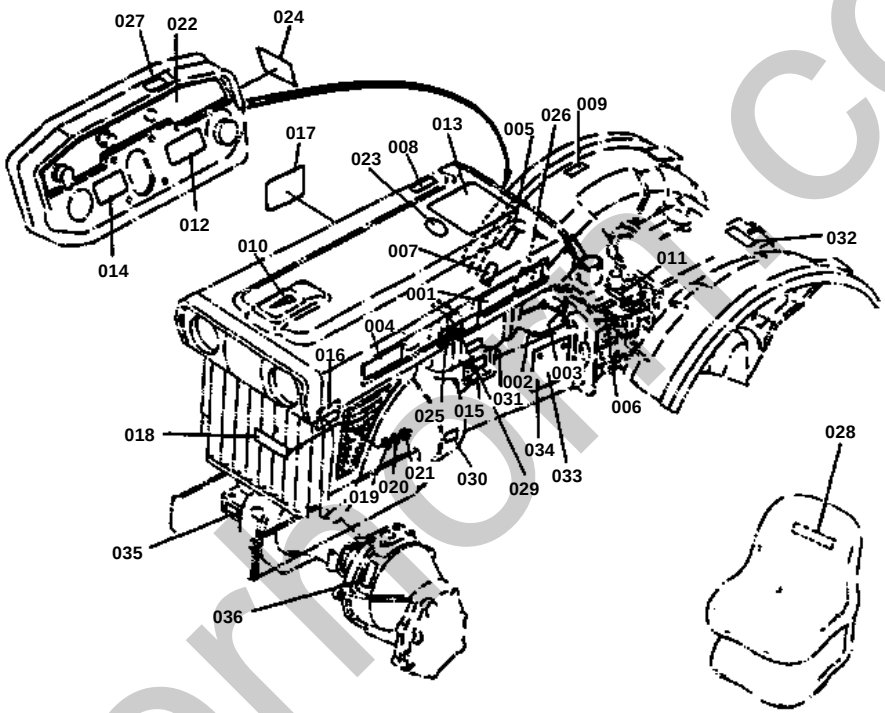

REF. No. 2 66706-4711-0
- English → English and French.
- Change in Shape and Rivet pitch.

REF. No. 6, 11, 14
- English → English and French.

REF. No. 5, 8, 9, 12, 13, 15, 16
- English → English and French.

REF. No. 28 32140-1847-0
Change of Size and Place.

REF. No. 29 35170-1829-0
For combined use between B and L Type.

REF. No. 17, 22, 23, 24, 25, 26, 27, 30
- English → English and French.

silverhorn.co.uk

↔ Interchangeable; ≠ not interchangeable; ← new for old; → old for new

REF.No	Part No.	Description	Q'ty	S.No.	I/C	REMARKS	Weight (kgf)	Weight (lb)
001	66811-47110	LABEL KUBOTA	2				0.003	0.0066
002	66494-47120	MARK S-CHANGE FOR E	1	<=16140			0	0
002	66706-47110	MARK S-CHANGE FOR E	1	>=16141			0.02	0.044
003	54102-24410	RIVET	4				0.001	0.0022
004	66494-47140	LABEL B5100E	2				0.002	0.0044
005	66601-48140	NAME PLATE 4	1	<=16140			0.001	0.0022
005	66706-47120	NAME PLATE 4	1	>=10001			0.001	0.0022
006	66494-47160	LABEL BLADE S-CHANGE	1	<=16140			0	0
006	66496-47160	LABEL BLADE S-CHANGE	1	>=10001			0.001	0.0022
007	66706-47150	NAME PLATE 7	1				0	0
008	66601-47190	LABEL RELEASE	1	<=16140			0.001	0.0022
008	66706-47230	LABEL RELEASE	1	>=10001			0.001	0.0022
009	66601-48160	NAME PLATE 6	1	<=16140			0.001	0.0022
009	66706-47140	NAME PLATE 6	1	>=10001			0	0
010	66591-47190	NAME PLATE 9	1				0.001	0.0022
011	66494-47230	LABEL MISSION OIL	1	<=16140			0	0
011	66496-47230	LABEL MISSION OIL	1	>=10001			0.001	0.0022
011	66496-47330	LABEL MISSION OIL	1	>=18030			0.001	0.0022
012	66704-47260	LABEL GLOW PLUG	1	<=16140			0	0
012	66706-47240	LABEL GLOW PLUG	1	>=10001			0.001	0.0022
013	66704-47210	LABEL	1	<=16140			0	0
013	66706-47292	LABEL	1	>=10001			0	0
013	66706-47293	LABEL	1				0.009	0.0198
014	66704-47280	LABEL DECOMPRESS	1	<=16140			0	0
014	66706-47270	LABEL DECOMPRESS	1	>=10001			0.001	0.0022
015	66601-48270	LABEL TOOLS BOX	1	<=16140			0.001	0.0022
015	66706-47260	LABEL TOOLS BOX	1	>=10001			0.001	0.0022
016	15103-94590	LABEL	1	<=16140			0.001	0.0022
016	66706-58820	LABEL	1	>=10001			0.001	0.0022
017	15232-88230	LABEL	1	<=16140			0.002	0.0044
017	66706-47280	LABEL	1	>=10001			0.003	0.0066
018	66601-47230	LABEL FRONT	1				0.02	0.044
019	04013-50040	WASHER PLAIN	2				0	0
020	04512-50040	WASHER SPRING	2				0	0
021	02054-50040	NUT	2				0.001	0.0022
022	66704-47410	LABEL	1	<=16140			0.019	0.0418
022	66704-47412	LABEL	1	>=10001			0	0
022	66204-47410	LABEL	1				0.02	0.044
023	66704-47410	LABEL	1	<=16140			0.019	0.0418
023	66704-47412	LABEL	1	>=10001			0	0
024	66601-47420	LABEL	1	<=16140			0.001	0.0022
024	66706-47320	LABEL	1	>=10001			0.001	0.0022
025	66711-47440	LABEL	1	<=16140			0	0
025	66706-47340	LABEL	1	>=10001			0.001	0.0022
026	66601-48640	LABEL	1	<=16140			0.001	0.0022
026	66706-47360	LABEL	1	>=10001			0.002	0.0044
027	66601-48720	LABEL	1	<=16140			0.001	0.0022
027	66706-47350	LABEL	1	>=10001			0.001	0.0022
028	66601-47250	LABEL	1	<=16140			0.001	0.0022
028	66706-47370	LABEL	1	>=10001			0.001	0.0022
028	66494-47260	LABEL KUBOTA	1	<=16140			0	0
028	32140-18470	LABEL KUBOTA	1	>=10001			0.002	0.0044
029	66494-47250	LABEL DIESEL ENGIRE	1	<=16140			0	0
029	35170-18290	LABEL DIESEL ENGIRE	1	>=10001			0.003	0.0066
030	66704-47430	LABEL	1	<=16140			0	0

silverhorn.co.uk

NAME PLATE GROUP

↔ Interchangeable; ≠ not interchangeable; ← new for old; → old for new

REF.No	Part No.	Description	Q'ty	S.No.	I/C	REMARKS	Weight (kgf)	Weight (lb)
030	66706-47330	LABEL	1	>=10001			0.001	0.0022
030	66704-47330	LABEL	1				0.001	0.0022
031	66706-47420	LABEL	1				0.001	0.0022
032	66706-47460	LABEL	1				0.002	0.0044
033	66494-47460	NAME PLATE	1	>=10001			0.01	0.022
034	54102-24410	RIVET	4	>=16141			0.001	0.0022
035	66706-47210	LABEL FRONT AXLE OIL	1				0.001	0.0022
036	66706-47220	LABEL GEAR CASE	2				0.001	0.0022

silverhorn.co.uk

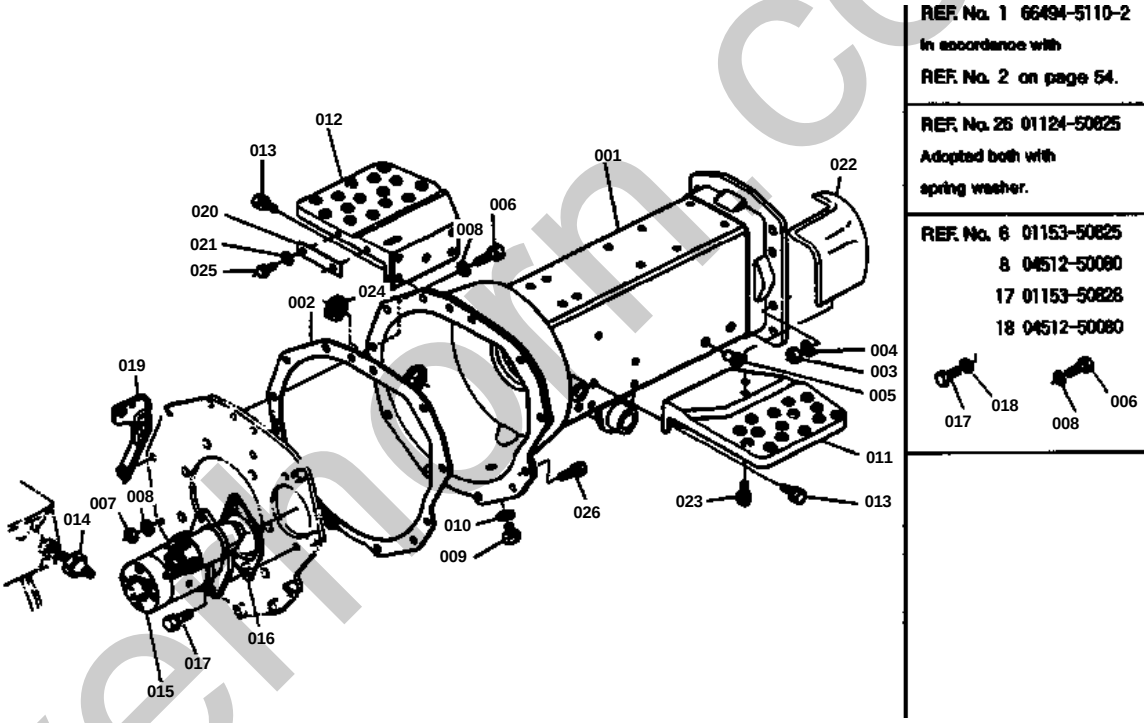

silvermorn.co.uk

CLUTCH HOUSING GROUP

↔ Interchangeable; ≠ not interchangeable; ← new for old; → old for new

REF.No	Part No.	Description	Q'ty	S.No.	I/C	REMARKS	Weight (kgf)	Weight (lb)
001	66494-51100	HOUSING CLUTCH	1	<=16140			13	28.6
001	66494-51102	HOUSING CLUTCH	1	>=16141			0	0
002	66621-51410	GASKET	1				0	0
003	02118-50100	NUT	8				0.005	0.011
004	04512-50100	WASHER SPRING	8				0	0
005	66591-54390	PLUG	8				0.001	0.0022
006	01153-50825	BOLT	11				0.012	0.0264
006	01153-50825	BOLT	1	>=10001			0.012	0.0264
007	02114-50080	NUT	1				0.005	0.011
008	04512-50080	WASHER SPRING	11				0.001	0.0022
008	04512-50080	WASHER SPRING	1				0.001	0.0022
009	06331-35016	PLUG	1				0.04	0.088
010	04717-01600	WASHER SEAL	1				0.003	0.0066
011	66711-51130	STEP LH	1				2.078	4.5716
012	66711-51140	STEP RH	1				1.948	4.2856
013	01120-50818	BOLT	10				0	0
014	15221-39010	SWITCH OIL	1				0	0
015	15231-63010	ASSY STARTER	1				0	0
016	66591-51160	GASKET	1				0	0
017	01153-50828	BOLT	2				0.014	0.0308
017	01124-50828	BOLT	2	>=10001			0.011	0.0242
018	04512-50080	WASHER SPRING	2				0.001	0.0022
019	66811-51450	STAY FILTER	1				0.102	0.2244
020	66711-51180	PLATE	1				0.045	0.099
021	04013-50080	WASHER PLAIN	2				0	0
022	66704-82610	COVER	1				0.205	0.451
023	01120-50814	BOLT	2				0	0
024	66704-51190	CAP	1				0.009	0.0198
025	01120-50818	BOLT	2				0	0
026	01124-50825	BOLT	10				0.015	0.033

silverhorn.co.uk

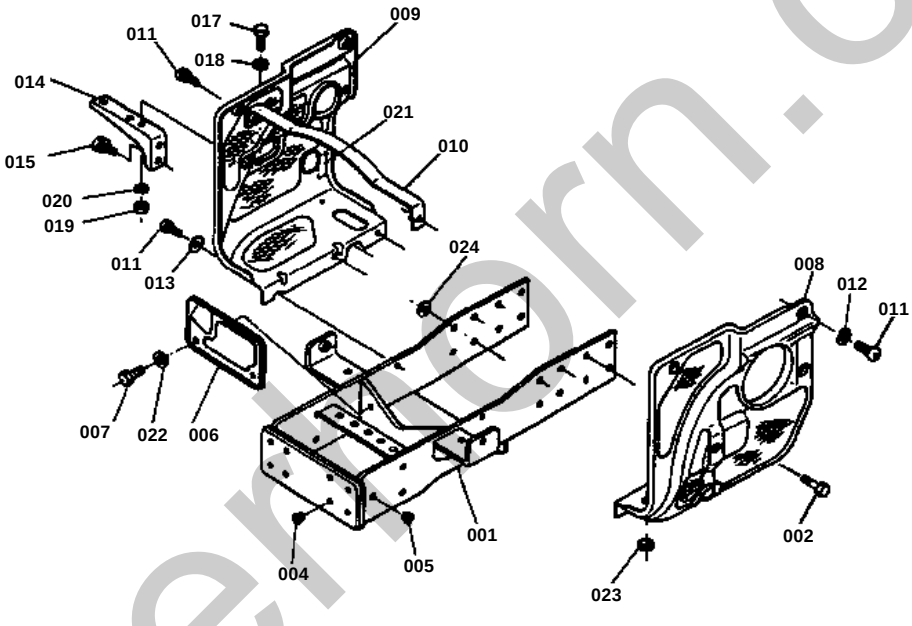

REF. No. 2 01173-51025
3 04512-50100
15 01153-50820
16 04512-50080

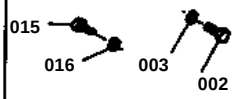

Change of bolt with spring washer.

REF. No. 8 66811-5381-0

REF. No. 21 66706-4733-0
English → English and French.

silverthorn.co.uk

FRONT WHEEL SUPPORT GROUP

↔ Interchangeable; ≠ not interchangeable; ← new for old; → old for new

REF.No	Part No.	Description	Q'ty	S.No.	I/C	REMARKS	Weight (kgf)	Weight (lb)
001	66494-53110	SUPPORT FRONT WHEEL	1				12.5	27.5
002	01173-51025	BOLT	16				0.021	0.0462
002	01134-51025	BOLT	16	>=10001			0	0
003	04512-50100	WASHER SPRING	16				0	0
004	66591-50100	PLUG	8				0	0
005	66591-11290	PLUG 2	6				0.001	0.0022
005	67111-11140	PLUG 2	6	>=10001			0	0
006	66811-53840	COVER FRONT	1				0.09	0.198
007	01150-50816	BOLT	2				0.01	0.022
008	66811-53810	COVER SIDE LH	1	<=16576			0	0
008	66494-53810	COVER SIDE LH	1	>=10001			0.65	1.43
009	66811-53820	COVER SIDE RH	1				0.736	1.6192
010	66811-53830	STAY SIDE COVER	1				0.21	0.462
011	03004-50614	SCREW	8				0.006	0.0132
012	04013-50060	WASHER PLAIN	4				0	0
013	04015-50060	WASHER PLAIN	2				0	0
014	66711-54310	STAY AIR CLEANER	1				0.306	0.6732
015	01153-50820	BOLT	2				0.012	0.0264
015	01124-50820	BOLT	2	>=10001			0	0
016	04512-50080	WASHER SPRING	2				0.001	0.0022
017	01150-50818	BOLT	1				0	0
018	04013-50080	WASHER PLAIN	1				0	0
019	02114-50080	NUT	1				0.005	0.011
020	04512-50080	WASHER SPRING	1				0.001	0.0022
021	66704-47430	LABEL	1				0	0
021	66706-47330	LABEL	1	>=10001			0.001	0.0022
022	04512-50080	WASHER SPRING	2				0.001	0.0022
023	66591-54580	RUBBER	1				0.003	0.0066
024	04013-50100	WASHER PLAIN	1				0	0

silverhorn.co.uk

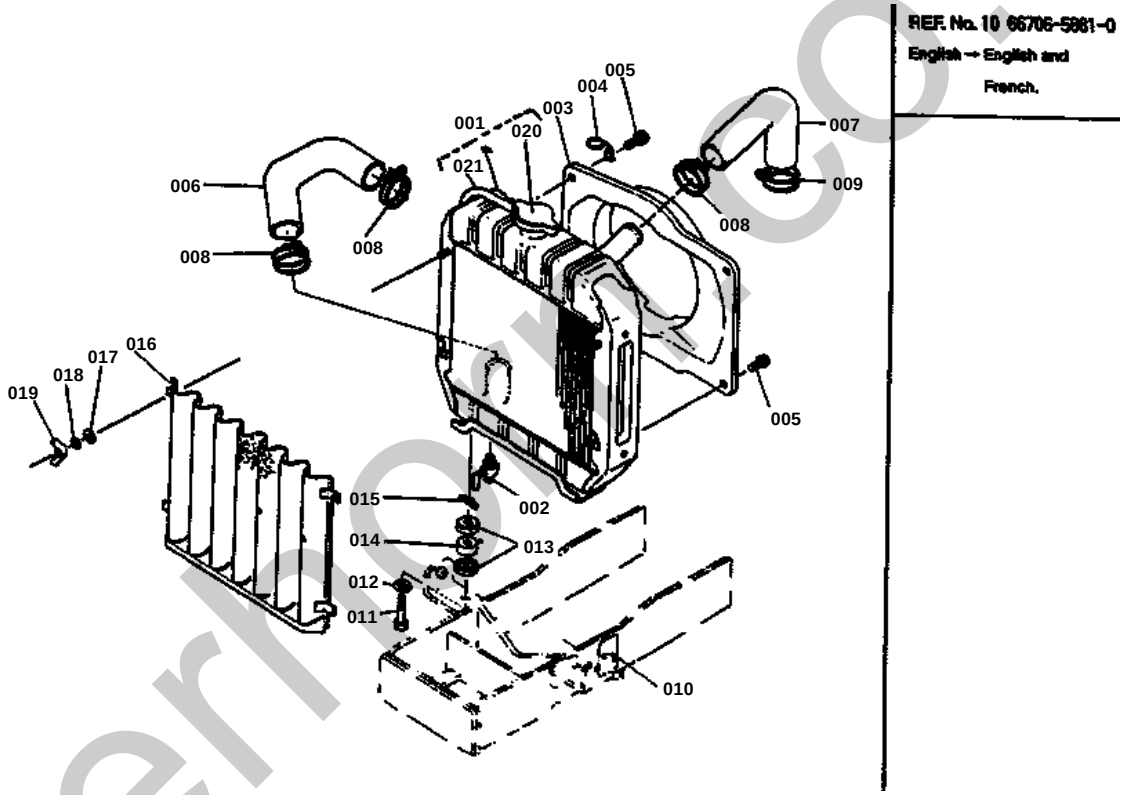

silverhorse.co.uk

↔ Interchangeable; ≠ not interchangeable; ← new for old; → old for new

REF.No	Part No.	Description	Q'ty	S.No.	I/C	REMARKS	Weight (kgf)	Weight (lb)
001	15262-72060	ASSY RADIATOR	1			REF.No.020 021	4.12	9.064
002	14301-73110	COCK DRAIN	1				0.094	0.2068
003	15262-74470	COVER FAN	1				0	0
004	66621-53260	RETAINER	2				0.04	0.088
005	01202-50612	BOLT	4				0.005	0.011
006	15261-72850	PIPE WATER 1	1				0.154	0.3388
007	15261-72940	PIPE WATER 4	1				0.135	0.297
008	15261-72780	BAND	3				0.024	0.0528
009	15108-72870	BAND	1				0.027	0.0594
010	15101-94610	LABEL RADIATOR	1	<=16140			0.002	0.0044
010	66706-58810	LABEL RADIATOR	1	>=10001			0.001	0.0022
011	66711-51340	BOLT RADIATOR STOP.	2				0.032	0.0704
012	04013-50100	WASHER PLAIN	2				0	0
013	15111-72200	WASHER	4				0.013	0.0286
014	15111-72180	CUSHION	2				0.015	0.033
015	05515-51000	PIN SNAP	2				0	0
016	66811-53310	NET RADIATOR	1				0.401	0.8822
017	04013-50060	WASHER PLAIN	2				0	0
018	04512-50060	WASTER SPRING	2				0	0
019	66621-55440	NUT WING	2				0.006	0.0132
020	15101-72030	CAP RADIATOR	1				0.075	0.165
021	15371-72710	PIPE WATER OVERFLOW	1				0.048	0.1056

silverhorn.co.uk

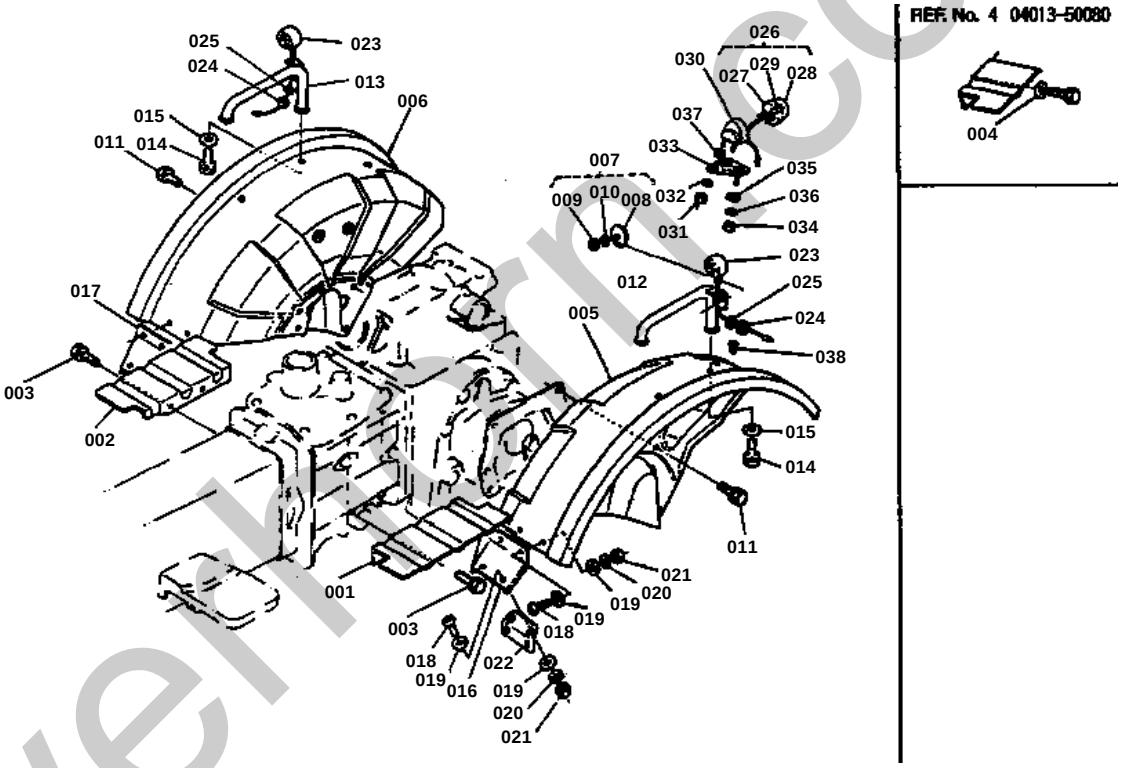

silverhirco.uk

FENDER GROUP

↔ Interchangeable; ≠ not interchangeable; ← new for old; → old for new

REF.No	Part No.	Description	Q'ty	S.No.	I/C	REMARKS	Weight (kgf)	Weight (lb)
001	66621-53410	COVER LH	1				0.53	1.166
002	66621-53420	COVER RH	1				0.46	1.012
003	01120-50816	BOLT	4				0	0
004	04013-50080	WASHER PLAIN	4				0	0
005	66811-53500	ASSY FENDER LH	1				6	13.2
005	66496-53500	ASSY FENDER LH	1	>=10001			5	11
006	66811-53600	ASSY FENDER RH	1				6	13.2
006	66496-53600	ASSY FENDER RH	1	>=10001			4.3	9.46
007	66591-52300	ASSY REFLECTOR	2			REF.No.008 TO 010	0.006	0.0132
008	53143-61240	REFLECTOR	1				0.009	0.0198
009	02054-50050	NUT	1				0.002	0.0044
010	04512-50050	WASHER SPRING	1				0	0
011	01120-50818	BOLT	8				0	0
012	66611-52750	BALUSTRADE LH	1				0.264	0.5808
013	66611-52760	BALUSTRADE RH	1				0.258	0.5676
014	01120-50820	BOLT	4				0	0
015	04013-50080	WASHER PLAIN	4				0	0
016	66811-51150	PLATE SUB LH	1				0.12	0.264
017	66811-51160	PLATE SUB RH	1				0.123	0.2706
018	03014-50614	SCREW	14				0.003	0.0066
019	04013-50060	WASHER PLAIN	28				0	0
020	04512-50060	WASHER SPRING	14				0	0
021	02014-50060	NUT	14				0.003	0.0066
022	66811-51170	STAY	2				0.042	0.0924
023	66611-55230	ASSY LAMP FLASHER	2				0.09	0.198
024	02114-50080	NUT	2				0.005	0.011
025	04512-50080	WASHER SPRING	2				0.001	0.0022
026	66704-55520	ASSY LAMP TAIL	1			REF.No.027 TO 029.	0.11	0.242
027	66704-55540	BODY TAIL LAMP	1				0.06	0.132
028	66704-55550	LENS TAIL LAMP	1				0.045	0.099
029	66704-55560	BULB TAIL LAMP	1				0.007	0.0154
030	34350-34190	BRACKET TAIL LAMP	1				0.107	0.2354
031	02014-50060	NUT	2				0.003	0.0066
032	04512-50060	WASHER SPRING	2				0	0
033	66704-55530	STAY TAIL LAMP	1				0	0
034	02014-50060	NUT	2				0.003	0.0066
035	04015-50060	WASHER PLAIN	2				0	0
036	04512-50060	WASHER SPRING	2				0	0
037	66591-54580	RUBBER	1				0.003	0.0066
038	63763-52580	RUBBER	6				0.001	0.0022

silverfrom.co.uk

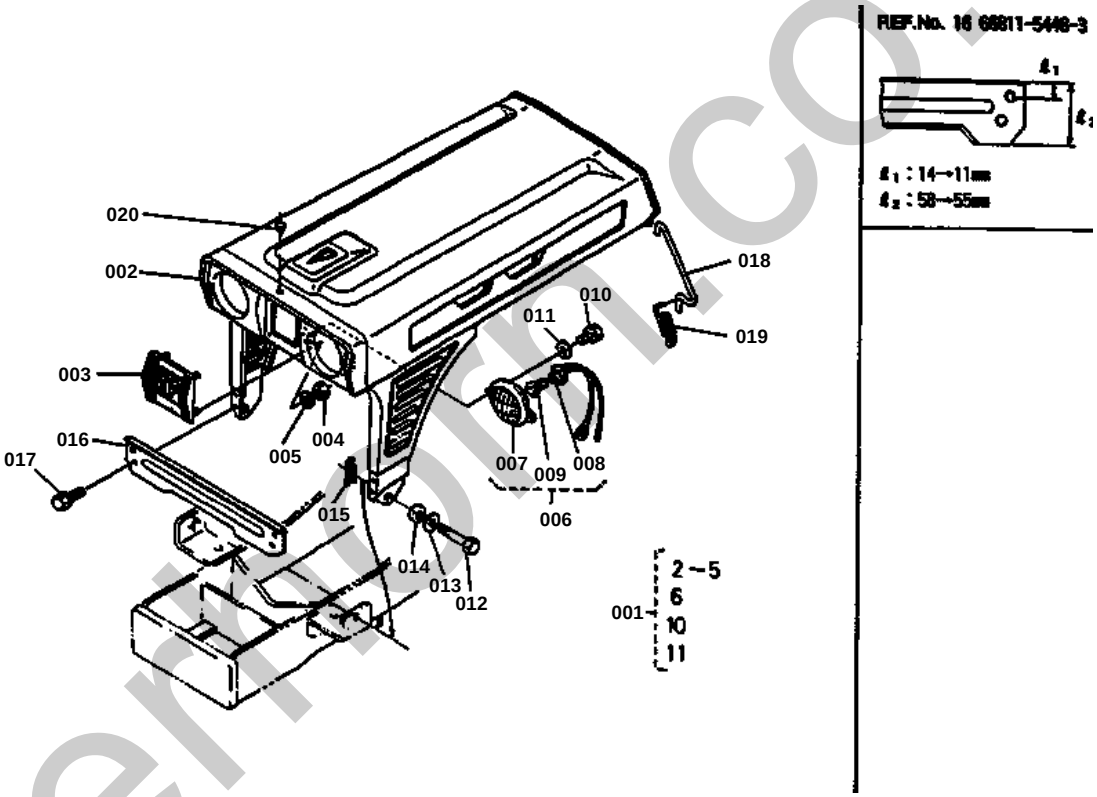

silverhorn.co.uk

BONNET GROUP

↔ Interchangeable; ≠ not interchangeable; ← new for old; → old for new

REF.No	Part No.	Description	Q'ty	S.No.	I/C	REMARKS	Weight (kgf)	Weight (lb)
001	66811-54100	ASSY BONNET	1			REF.No.002 TO 005 006 010 AND 011	10	22
002	66811-54110	BONNET	1				4.8	10.56
003	66711-54140	MASCOT	1				0.09	0.198
004	02014-50060	NUT	4				0.003	0.0066
005	04512-50060	WASHER SPRING	4				0	0
006	66711-54120	ASSY LAMP HEAD	2			REF.No.007 TO 009	0.15	0.33
007	66591-55610	LAMP HEAD	1				0.15	0.33
008	66711-54130	SOCKET	1				0.016	0.0352
009	66591-55630	BULB	4				0.008	0.0176
010	01202-50612	BOLT	4				0.005	0.011
011	04013-50060	WASHER PLAIN	2				0	0
012	66711-54150	BOLT BONNET STOPPER	2				0.026	0.0572
013	04015-50100	WASHER PLAIN	2				0.016	0.0352
014	34150-18180	CUSHION	2				0.003	0.0066
015	05515-51000	PIN SNAP	2				0	0
016	66811-54480	STAY BONNET	1	<=16140			0.244	0.5368
016	66811-54483	STAY BONNET	1	>=10001			0	0
017	01120-50816	BOLT	4				0	0
018	66811-55210	HOOK BONNET	2				0.033	0.0726
019	66711-55220	SPRING	2				0.01	0.022
020	63763-52580	RUBBER	1				0.001	0.0022

silverhorn.co.uk

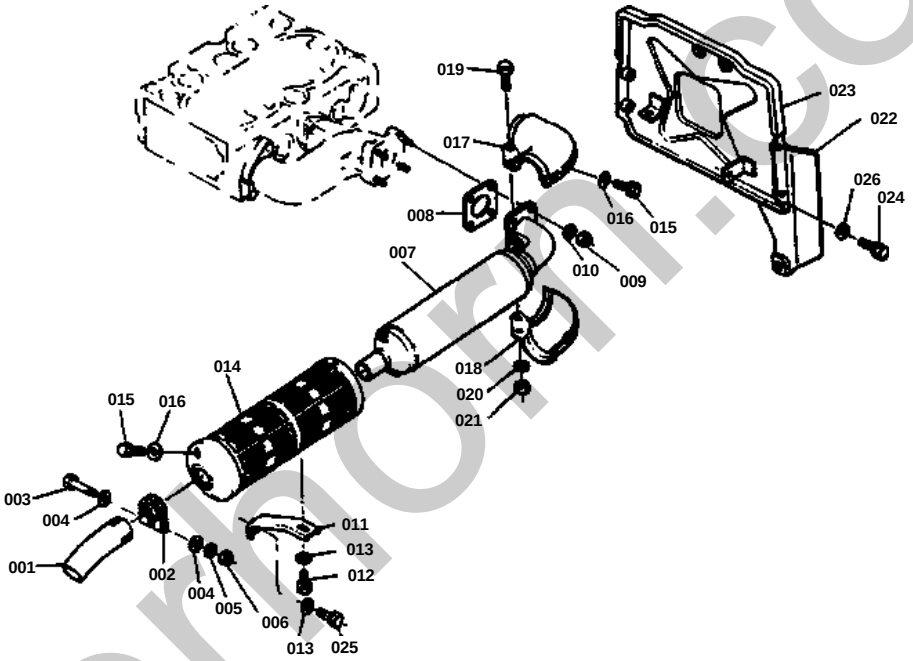

silverhorn.co.uk

MUFFLER GROUP

↔ Interchangeable; ≠ not interchangeable; ← new for old; → old for new

REF.No	Part No.	Description	Q'ty	S.No.	I/C	REMARKS	Weight (kgf)	Weight (lb)
001	66711-54410	PIPE MUFFLER	1				0.137	0.3014
002	66711-54420	BAND MUFFLER	1				0.038	0.0836
003	01150-50865	BOLT	1				0	0
004	04013-50080	WASHER PLAIN	2				0	0
005	04512-50080	WASHER SPRING	1				0.001	0.0022
006	02114-50080	NUT	1				0.005	0.011
007	15262-12110	MUFFLER	1				2.15	4.73
008	15371-12370	GASKET MUFFLLER	1				0	0
009	02114-50080	NUT	4				0.005	0.011
010	04512-50080	WASHER SPRING	4				0.001	0.0022
011	66711-54530	STAY MUFFLER	1				0.096	0.2112
012	01120-50814	BOLT	1				0	0
013	04013-50080	WASHER PLAIN	2				0	0
014	66811-54510	COVER MUFFLER	1				0.666	1.4652
015	01202-50612	BOLT	4				0.005	0.011
016	04013-50060	WASHER PLAIN	4				0	0
017	66711-54550	COVER MUFFLER FL. LH	1				0.137	0.3014
018	66711-54560	COVER MUFFLER FL. RH	1				0.135	0.297
019	01050-50628	BOLT	2				0	0
020	04512-50060	WASHER SPRING	2				0	0
021	02014-50060	NUT	2				0.003	0.0066
022	66811-54560	COVER	1				1.3	2.86
023	66711-54620	TAPE	1				0.005	0.011
024	01120-50816	BOLT	1				0	0
025	01120-50818	BOLT	1				0	0
026	04013-50080	WASHER PLAIN	1				0	0

silverhorn.co.uk

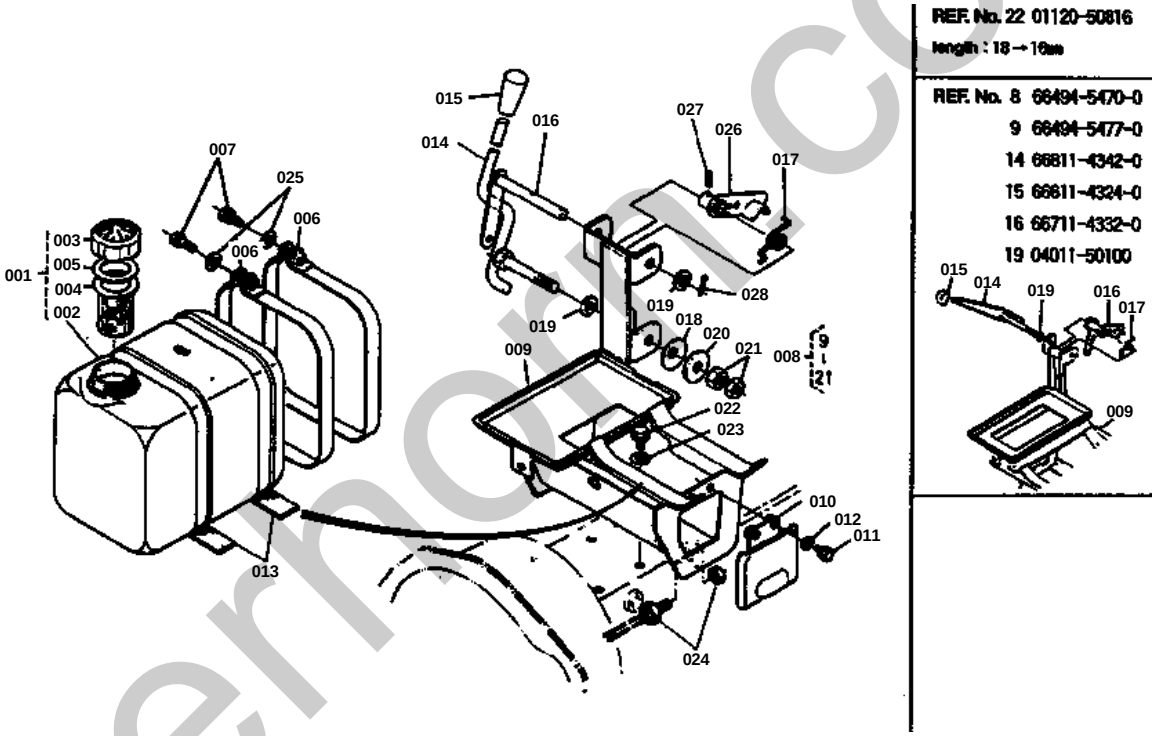

silverhorn.co.uk

FUEL TANK GROUP

↔ Interchangeable; ≠ not interchangeable; ← new for old; → old for new

REF.No	Part No.	Description	Q'ty	S.No.	I/C	REMARKS	Weight (kgf)	Weight (lb)
001	66621-54800	ASSY TANK FUEL	1			REF.No.002 TO 005	0	0
002	99999-99999	BLANK	0			ORDER BY REF.No.001	0	0
003	66621-54820	ASSY CAP FUEL	1				0.028	0.0616
004	13251-41060	FILTER	1				0.01	0.022
005	10211-41340	GASKET	1				0.003	0.0066
006	66621-54760	BAND FUEL TANK	2				0.22	0.484
007	01120-50830	BOLT	2				0	0
008	66494-54700	ASSY BRA. TANK BATT.	1			REF.No.009 TO 021 026 TO 028	4	8.8
008	66404-54700	ASSY BRA. TANK BATT.	1			REF.No.009 TO 021 026 TO 028	0	0
009	66494-54770	BRACKET TANK BATTERY	1				3	6.6
009	66404-54770	BRACKET TANK BATTERY	1				0	0
010	66571-54520	CAP SIDE	1				0.085	0.187
011	01202-50612	BOLT	2				0.005	0.011
012	04013-50060	WASHER PLAIN	2				0	0
013	66641-54740	CUSHION TANK	2				0.065	0.143
014	66811-43420	LEVER RELEASE	1				0.224	0.4928
014	66704-43340	LEVER RELEASE	1				0.2	0.44
015	66611-43240	GRIP LEVER	1				0.018	0.0396
015	06914-00100	GRIP LEVER	1				0.02	0.044
016	66711-43320	ARM RELEASE	1				0.144	0.3168
016	66704-43320	ARM RELEASE	1				0.1	0.22
017	66711-43330	SPRING RELEASE	1				0.01	0.022
018	32210-17190	SPRING	1				0.005	0.011
019	04011-50100	WASHER PLAIN	1				0.002	0.0044
019	04011-50100	WASHER PLAIN	2				0.002	0.0044
020	04015-50100	WASHER PLAIN	1				0.016	0.0352
021	02116-50100	NUT	2				0.004	0.0088
022	01120-50818	BOLT	4	<=16140			0	0
022	01120-50816	BOLT	4	>=10001			0	0
023	04013-50080	WASHER PLAIN	4				0	0
024	37150-32240	SWITCH SAFETY	1				0.12	0.264
025	04013-50080	WASHER PLAIN	2				0	0
026	66704-43350	LEVER ENGINE STOP	1				0.07	0.154
027	05411-00314	PIN SPRING	1				0.001	0.0022
027	66704-43360	PIN SPRING	1				0.005	0.011
028	05511-50320	PIN SPLIT	1				0.002	0.0044

silverhorn.co.uk

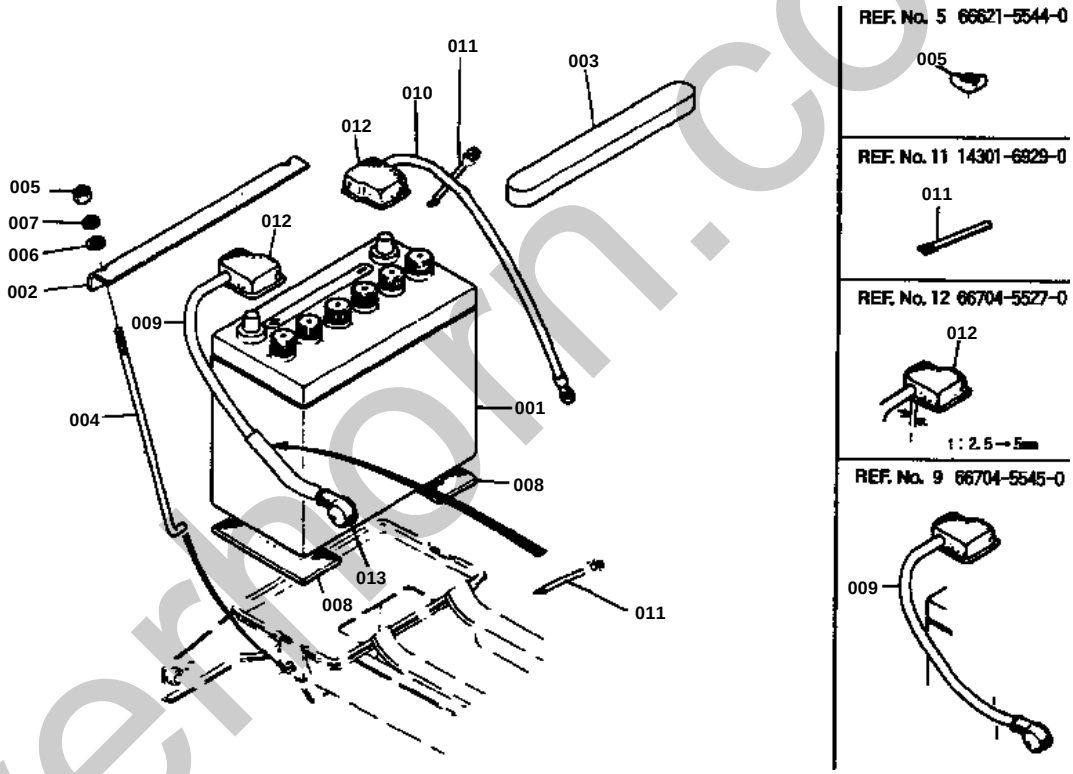

silvermoth.co.uk

↔ Interchangeable; ≠ not interchangeable; ← new for old; → old for new

REF.No	Part No.	Description	Q'ty	S.No.	I/C	REMARKS	Weight (kgf)	Weight (lb)
001	66704-55412	BATTERY	1				7	15.4
002	66811-55420	RETAINER BATTERY	1				0.082	0.1804
003	66621-55430	COVER BATTERY	1				0.059	0.1298
004	66591-54490	BOLT	2				0.048	0.1056
005	66621-55440	NUT WING	2				0.006	0.0132
005	02014-50060	NUT	2	>=10001			0.003	0.0066
006	04013-50060	WASHER PLAIN	2				0	0
007	04512-50060	WASHER SPRING	2				0	0
008	66591-54510	CUSHION BATTERY	2				0.02	0.044
009	66704-55450	CORD BATTERY	1	<=16919			0	0
009	66704-55452	CORD BATTERY	1	>=10001			0	0
010	66494-55130	CORD BATTERY	1				0	0
011	14301-69290	BAND PIPE	2				0.001	0.0022
011	66711-55470	CLAMP CORD	2	>=10001			0.001	0.0022
012	66571-55170	CAP TERMINAL	2				0	0
012	66704-55270	CAP TERMINAL	2				0.015	0.033
013	66591-55190	CAP TERMINAL	1				0.012	0.0264

silverhorn.co.uk

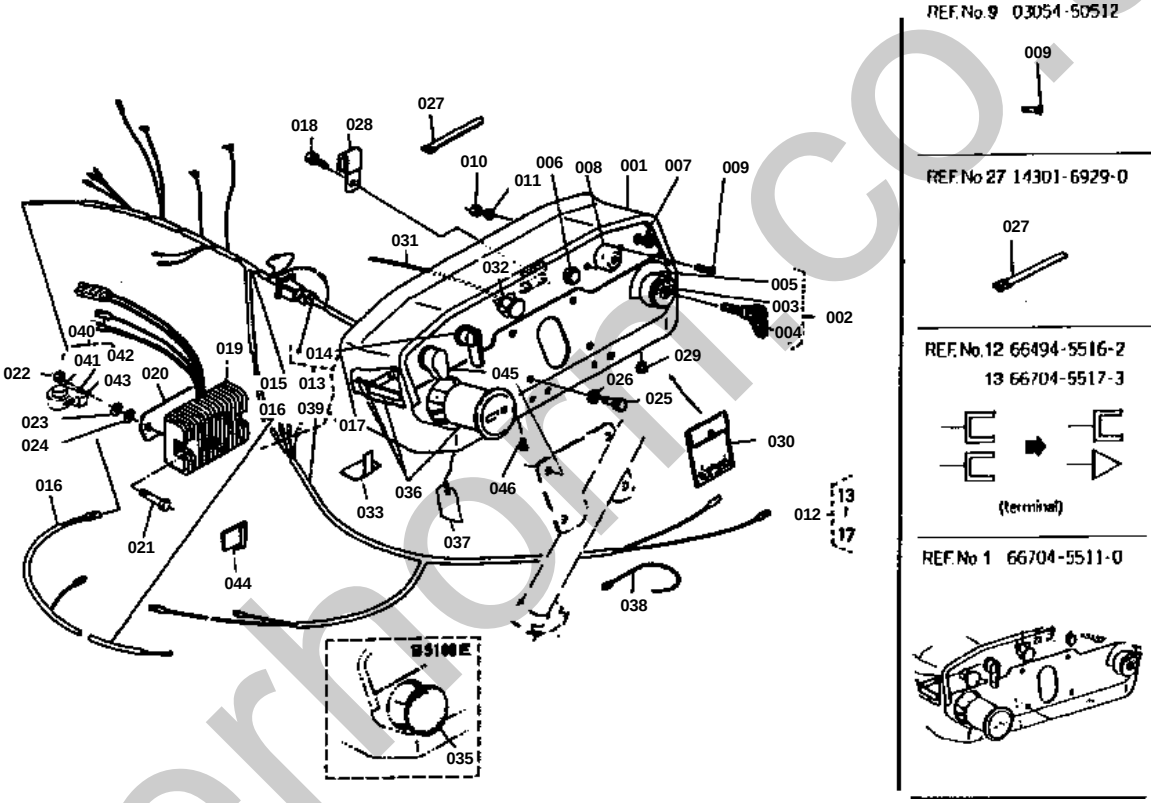

silverhorn.co.uk

↔ Interchangeable; ≠ not interchangeable; ← new for old; → old for new

REF.No	Part No.	Description	Q'ty	S.No.	I/C	REMARKS	Weight (kgf)	Weight (lb)
001	66704-55110	PANEL	1				0	0
001	66704-55112	PANEL	1	>=10001			0	0
002	66704-55120	ASSY SWITCH STARTER	1			REF.No.003 TO 005	0.25	0.55
002	66706-55120	ASSY SWITCH STARTER	1			REF.No.003 TO 005	0.256	0.5632
003	66711-55130	SWITCH STARTER	1				0.241	0.5302
004	66711-55140	KEY	1			SET	0	0
005	66704-55150	LABEL STARTER SWITCH	1	<=16140			0	0
005	66706-55150	LABEL STARTER SWITCH	1	>=10001			0.001	0.0022
006	66711-55290	ASSY LAMP OIL	1				0.016	0.0352
008	15221-65950	LAMP GLOW	1				0.052	0.1144
009	03054-50512	SCREW	2				0.003	0.0066
009	01050-50512	BOLT	2	>=10001			0.003	0.0066
010	02054-50050	NUT	2				0.002	0.0044
011	04512-50050	WASHER SPRING	2				0	0
012	66494-55160	ASSY WIRE HARNESS	1	<=16462		REF.No.013 TO 016 039	0.44	0.968
012	66494-55162	ASSY WIRE HARNESS	1	>=16463		REF.No.013 TO 016 039	0.482	1.0604
012	66494-55260	ASSY WIRE HARNESS	1			REF.No.013 TO 016 039	0.6	1.32
013	66704-55170	WIRE HARNESS 1	1	<=16462			0.266	0.5852
013	66704-55173	WIRE HARNESS 1	1	>=16463			0.266	0.5852
013	66204-55170	WIRE HARNESS 1	1				0.285	0.627
014	66621-55190	SWITCH LIGHTING	1				0.067	0.1474
015	66494-55180	WIRE HARNESS 2	1				0.213	0.4686
015	66494-55280	WIRE HARNESS 2	1	>=10001			0.23	0.506
016	66711-55190	WIRE HARNESS 3	1				0.017	0.0374
019	15372-64600	REGULATOR	1				0.22	0.484
020	66704-55260	CUSHION	1				0.009	0.0198
021	01050-50640	BOLT	2				0	0
022	02014-50060	NUT	2				0.003	0.0066
023	04512-50060	WASHER SPRING	2				0	0
024	04013-50060	WASHER PLAIN	2				0	0
025	01120-50818	BOLT	4				0	0
026	04013-50080	WASHER PLAIN	4				0	0
027	14301-69290	BAND PIPE	2				0.001	0.0022
027	66711-55470	CLAMP CORD	1	>=10001			0.001	0.0022
028	13313-69750	ASSY CLAMP CORD	1				0	0
029	35110-32420	PLUG	1				0.002	0.0044
030	66591-55520	ASSY FUSE	1				0.004	0.0088
031	66711-43510	WIRE DECOMPRESS	1				0.093	0.2046
032	04011-50100	WASHER PLAIN	1				0.002	0.0044
033	66611-55190	CLAMP CORD	6				0.001	0.0022
034	34159-34290	CAP RUBBER	1			NOT SHOWN IN FIG.	0.004	0.0088
036	66711-82910	METER HOUR	1				0.2	0.44
037	66706-47380	CARD CAUTION	1				0.001	0.0022
038	66704-55510	BAND CORD	1				0.002	0.0044
039	66494-55290	WIRE HARNESS 4	1				0.07	0.154
040	66204-55810	UNIT	1			REF.No.041 042	0	0
040	66204-55812	UNIT	1			REF.No.041 042	0.06	0.132
041	66204-55830	BODY	1				0.5	1.1
042	66204-55840	BAND	1				0.006	0.0132
043	66204-55820	STAY	1				0.01	0.022
044	66706-55220	CLAMP	10				0.002	0.0044
045	55311-41120	SWITCH	1				0.05	0.11
046	63763-52580	RUBBER	2				0.001	0.0022

silverthorn.co.uk

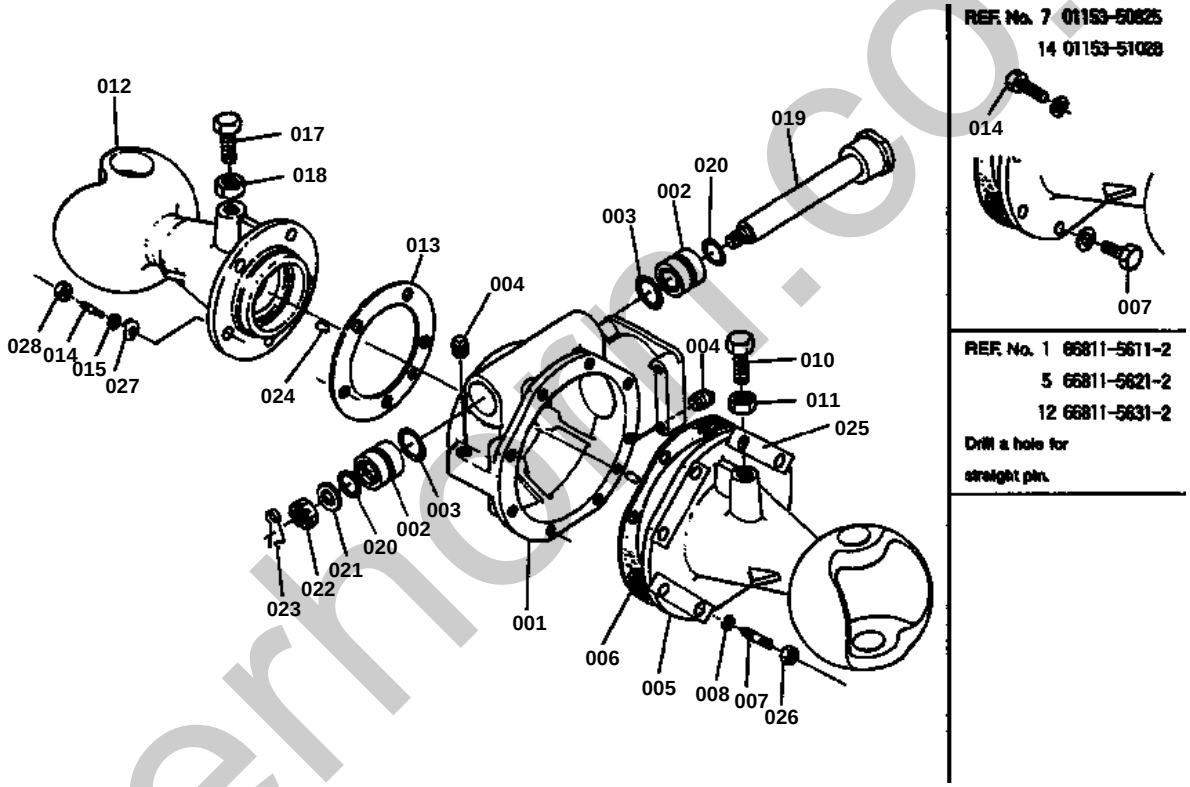

silvermoor.co.uk

FRONT AXLE CASE GROUP [B5100D-P]

↔ Interchangeable; ≠ not interchangeable; ← new for old; → old for new

REF.No	Part No.	Description	Q'ty	S.No.	I/C	REMARKS	Weight (kgf)	Weight (lb)
001	66811-56110	CASE FRONT AXLE	1	<=16140			4	8.8
001	66811-56112	CASE FRONT AXLE	1	>=10001			0	0
002	66591-56120	BUSH	2				0.074	0.1628
003	04811-50250	O RING	2				0.001	0.0022
004	06312-10020	PLUG	2				0.015	0.033
005	66811-56210	CASE FRONT AXLE LH	1	<=16140			5.9	12.98
005	66811-56212	CASE FRONT AXLE LH	1	>=10001			0	0
006	66621-56220	GASKET	1				0	0
007	01153-50825	BOLT	8				0.012	0.0264
007	01518-50820	STUD	8				0.012	0.0264
008	04512-50080	WASHER SPRING	8				0.001	0.0022
009	99999-99999	BLANK	0				0	0
010	66591-56280	BOLT	1				0	0
011	02112-50120	NUT	1				0.007	0.0154
012	66811-56310	CASE FRONT AXLE RH	1	<=16140			5	11
012	66811-56312	CASE FRONT AXLE RH	1	>=10001			0	0
013	66621-56321	GASKET	1				0	0
014	01153-51028	BOLT	5				0.02	0.044
014	01555-51022	STUD	5				0.021	0.0462
015	04512-50100	WASHER SPRING	5				0	0
016	99999-99999	BLANK	0				0	0
017	66591-56280	BOLT	1				0	0
018	02112-50120	NUT	1				0.007	0.0154
019	66621-57152	PIN CENTER	1				0.52	1.144
020	04811-40140	O RING	2				0.001	0.0022
021	04011-50180	WASHER PLAIN	1				0.012	0.0264
022	02372-50180	NUT SLOTTED	1				0.019	0.0418
023	66611-57150	SPRING SET	1				0.02	0.044
024	05012-01018	PIN STRAIGHT	2	>=16141			0.012	0.0264
025	66811-56620	STOPPER	4				0.01	0.022
026	02114-50080	NUT	8				0.005	0.011
027	66611-56610	WASHER TONGUE	5				0.003	0.0066
028	02176-50100	NUT	5				0.005	0.011

silverhorn.co.uk

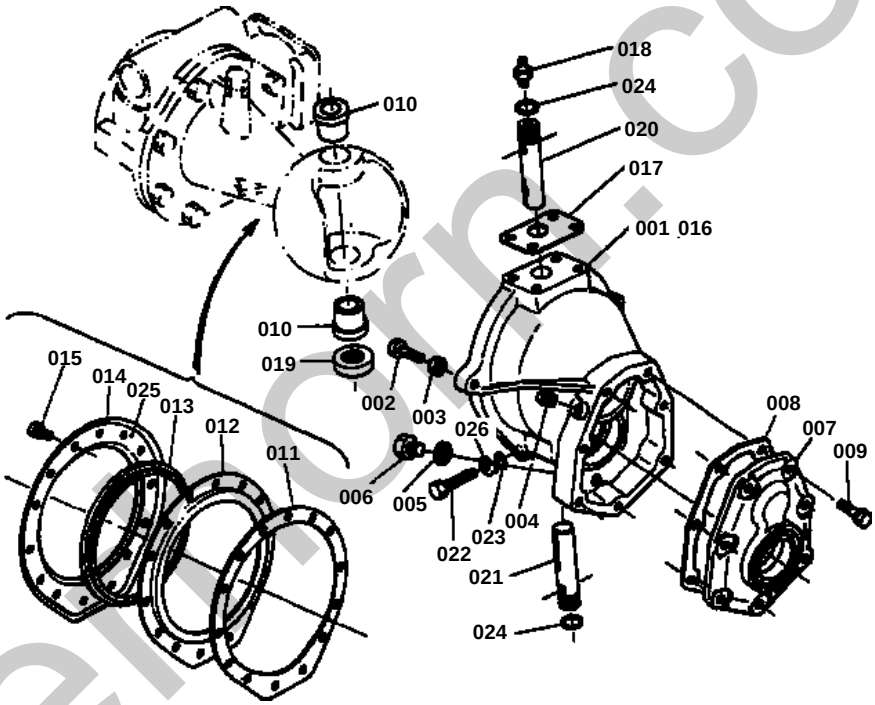

silvermorn.co.uk

FRONT WHEEL GEAR CASE GROUP [B5100D-P]

↔ Interchangeable; ≠ not interchangeable; ← new for old; → old for new

REF.No	Part No.	Description	Q'ty	S.No.	I/C	REMARKS	Weight (kgf)	Weight (lb)
001	66711-56410	CASE GEAR LH	1				4.5	9.9
002	66591-56440	BOLT	2				0.02	0.044
003	02112-50100	NUT	2				0.004	0.0088
004	06312-10020	PLUG	2				0.015	0.033
005	04717-01000	WASHER SEAL	2				0.001	0.0022
006	06331-35010	PLUG	2				0.012	0.0264
007	66711-56430	COVER GEAR CASE	2				1.078	2.3716
008	66711-56440	GASKET	2				0	0
009	01120-50828	BOLT	14				0	0
010	66711-56470	BUSH KING PIN	4				0.064	0.1408
011	66711-56560	GASKET DUST COVER	2				0	0
012	66711-56570	HOLDER DUST SEAL	2				0.096	0.2112
013	66711-56580	SEAL DUST	2				0.016	0.0352
014	66711-56590	COVER DUST	2				0.19	0.418
015	01202-50614	BOLT	28				0.006	0.0132
016	66711-56420	CASE GEAR RH	1				5.2	11.44
017	66711-56480	GASKET KNUCKLE ARM	2				0	0
018	06613-10010	NIPPLE GREASE	2				0.006	0.0132
019	08400-00010	BEARING THRUST BALL	2				0.046	0.1012
020	66711-56450	PIN KING UPPER	2				0.15	0.33
021	66711-56460	PIN KING UNDER	2				0.151	0.3322
022	66711-56630	BOLT	4				0	0
022	01173-51035	BOLT	4	>=10001			0.025	0.055
023	04717-01000	WASHER SEAL	4				0.001	0.0022
024	04811-10180	O RING	4				0.001	0.0022
025	66711-56490	GASKET FELT	2				0.011	0.0242
026	66611-56610	WASHER	4				0.003	0.0066

silverhorn.co.uk

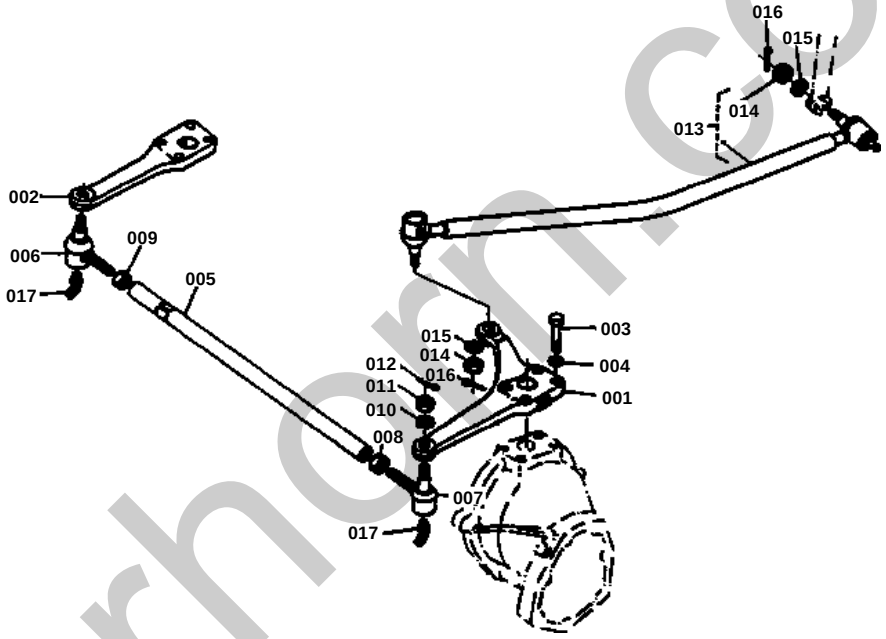

silverhorn.co.uk

KNUCKLE ARM GROUP [B5100D-P]

↔ Interchangeable; ≠ not interchangeable; ← new for old; → old for new

REF.No	Part No.	Description	Q'ty	S.No.	I/C	REMARKS	Weight (kgf)	Weight (lb)
001	66811-56510	ARM KNUCKLE LH	1				1	2.2
002	66811-56520	ARM KNUCKLE RH	1				0.78	1.716
003	01153-51035	BOLT	8				0.025	0.055
004	04512-50100	WASHER SPRING	8				0	0
005	66591-56870	ROD TIE	1				0.487	1.0714
006	66711-56540	ASSY END ROD 2	1				0.13	0.286
007	66711-56550	ASSY END ROD 3	1				0.18	0.396
008	66591-56880	NUT LEFT	1				0.01	0.022
009	02172-50120	NUT	1				0.01	0.022
010	04512-50100	WASHER SPRING	2				0	0
011	66591-56780	NUT SLOTTED	2				0.01	0.022
012	05511-52520	PIN SPLIT	2				0.001	0.0022
013	66631-57100	ASSY LINK DRAG	1			REF.No.014	0	0
014	66591-56780	NUT SLOTTED	2				0.01	0.022
015	04512-50100	WASHER SPRING	2				0	0
016	05511-52528	PIN SPLIT	2				0.001	0.0022
017	66591-56930	NIPPLE GREASE	2				0.003	0.0066

silverhorn.co.uk

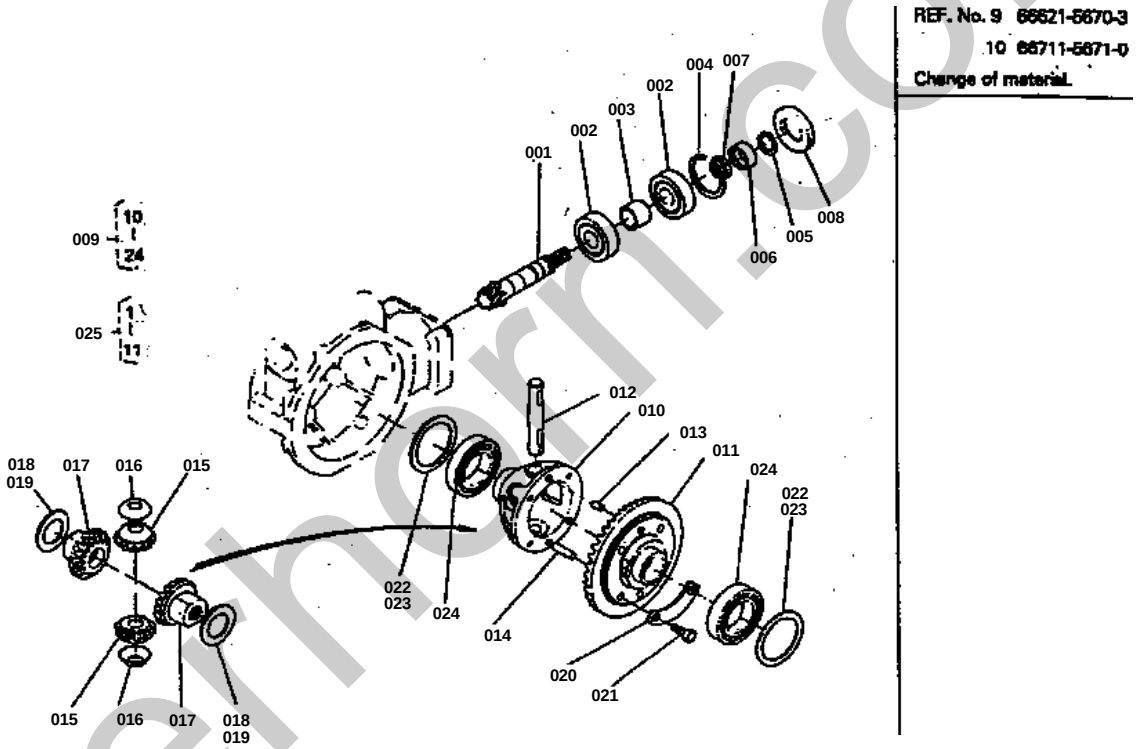

silverhorn.co.uk

↔ Interchangeable; ≠ not interchangeable; ← new for old; → old for new

REF.No	Part No.	Description	Q'ty	S.No.	I/C	REMARKS	Weight (kgf)	Weight (lb)
001	99999-99999	BLANK	0			ORDER BY REF.No.025	0	0
002	08101-06304	BEARING BALL	2				0.146	0.3212
003	66621-56620	COLLAR	1				0.033	0.0726
004	04611-00520	CIR-CLIP INTERNAL	1				0.009	0.0198
005	04612-00200	CIR-CLIP EXTERNAL	1				0.001	0.0022
006	66621-56630	BUSH	1				0.028	0.0616
007	66591-14770	COLLAR	2				0.003	0.0066
008	09500-32528	SEAL OIL	1				0.017	0.0374
009	66621-56700	ASSY DIFF FRONT AXLE	1	<=16140		REF.No.010 TO 024	2.88	6.336
009	66621-56703	ASSY DIFF FRONT AXLE	1	>=10001		REF.No.010 TO 024	0	0
010	66621-56710	CASE DIFFERENTIAL	1	<=16140			0	0
010	66711-56710	CASE DIFFERENTIAL	1	>=10001			0	0
011	99999-99999	BLANK	0			ORDER BY REF.No.025	0	0
012	66591-14830	SHAFT DIFF PINION	1				0.1	0.22
013	66591-14790	PIN KNOCK	1				0.004	0.0088
014	66591-14783	PIN STRAIGHT	1				0.01	0.022
015	66591-14840	GEAR DIFF PINION	2				0.082	0.1804
016	66591-14850	COLLAR THRUST	2				0.006	0.0132
017	66591-14870	GEAR DIFF SIDE	2				0.18	0.396
018	66591-14880	SHIM	2				0.008	0.0176
019	66591-14890	SHIM	1				0.01	0.022
020	66591-14910	PLATE LOCK	2				0.006	0.0132
021	01156-50820	BOLT	4				0.01	0.022
022	66591-14920	SHIM DIFF SIDE 1	1				0.006	0.0132
023	66591-14930	SHIM DITF SIDE 2	1				0.002	0.0044
024	08101-06008	BEARING BALL	2				0.19	0.418
025	66621-82810	ASSY 2 B/GEAR 6-37	1			REF.No.001 011	1.47	3.234

silverhorn.co.uk

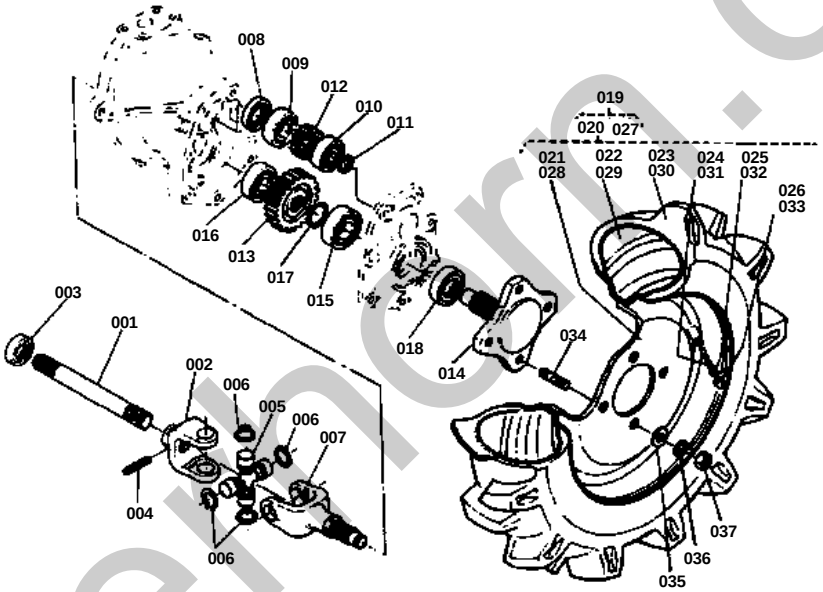

REF. No. 12 66704-5695-0
Coefficient of gear shift
: 0.5 → 0.7

REF. No. 13 66704-5696-0
Coefficient of gear shift
: 0.5 → 0.3

silvermarn.co.uk

↔ Interchangeable; ≠ not interchangeable; ← new for old; → old for new

REF.No	Part No.	Description	Q'ty	S.No.	I/C	REMARKS	Weight (kgf)	Weight (lb)
001	66811-56810	SHAFT	2				0.491	1.0802
002	66711-56920	JOINT FRONT AXLE	2				0.428	0.9416
003	09400-21407	SEAL OIL	2				0	0
004	05411-00635	PIN SPRING	2				0.005	0.011
005	66716-31160	ASSY JOINT UNIVERSAL	2				0.32	0.704
006	66716-31170	CIR-CLIP EXTERNAL	8				0.002	0.0044
007	66711-56930	SHAFT JOINT	2				0.618	1.3596
008	09230-25405	SEAL OIL	2				0.001	0.0022
009	08101-06204	BEARING BALL(6204)	2				0.102	0.2244
010	08101-06303	BEARING BALL(6303)	2				0.112	0.2464
011	04612-00170	CIR-CLIP EXTERNAL	2				0.001	0.0022
012	66711-56950	GEAR SPUR 12	2	<=16918			0.148	0.3256
012	66704-56950	GEAR SPUR 12	2	>=16919			0.162	0.3564
013	66711-56960	GEAR SPUR 25	2	<=16918			0.6	1.32
013	66704-56960	GEAR SPUR 25	2	>=16919			0.58	1.276
014	66591-56555	HUB FRONT WHEEL	2				0.85	1.87
015	08101-06206	BEARING BALL(6206)	2				0.196	0.4312
016	08101-06205	BEARING BALL(6205)	2				0.14	0.308
017	04612-00290	CIR-CLIP EXTERNAL	2				0.003	0.0066
018	63733-17150	SEAL OIL	2				0.04	0.088
019	99999-99999	BLANK	1			ASSY FRONT WHEEL OBTAINED LOCALLY	0	0
020	99999-99999	BLANK	1			ASSY TIRE LH OBTAINED LOCALLY	0	0
021	99999-99999	BLANK	1			WHEEL OBTAINED LOCALLY	0	0
022	99999-99999	BLANK	1			TUBE OBTAINED LOCALLY	0	0
023	99999-99999	BLANK	1			TIRE OBTAINED LOCALLY	0	0
024	99999-99999	BLANK	1			ASSY VALVE OBTAINED LOCALLY	0	0
025	99999-99999	BLANK	1			CORE VALVE OBTAINED LOCALLY	0	0
026	99999-99999	BLANK	1			CAP VALVE OBTAINED LOCALLY	0	0
027	99999-99999	BLANK	1			ASSY TIRE RH OBTAINED LOCALLY	0	0
028	99999-99999	BLANK	1			WHEEL OBTAINED LOCALLY	0	0
029	99999-99999	BLANK	1			TUBE OBTAINED LOCALLY	0	0
030	99999-99999	BLANK	1			TIRE OBTAINED LOCALLY	0	0
031	99999-99999	BLANK	1			ASSY VALVE OBTAINED LOCALLY	0	0
032	99999-99999	BLANK	1			CORE VALVE OBTAINED LOCALLY	0	0
033	99999-99999	BLANK	1			CAP VALVE OBTAINED LOCALLY	0	0

silverhorn.co.uk

↔ Interchangeable; ≠ not interchangeable; ← new for old; → old for new

REF.No	Part No.	Description	Q'ty	S.No.	I/C	REMARKS	Weight (kgf)	Weight (lb)
034	66591-56564	STUD	8				0.028	0.0616
035	04014-50120	WASHER SPRING	8				0.007	0.0154
036	04512-50120	WASHER SPRING	8				0.003	0.0066
037	02174-50120	NUT	8				0.01	0.022

silverhorn.co.uk

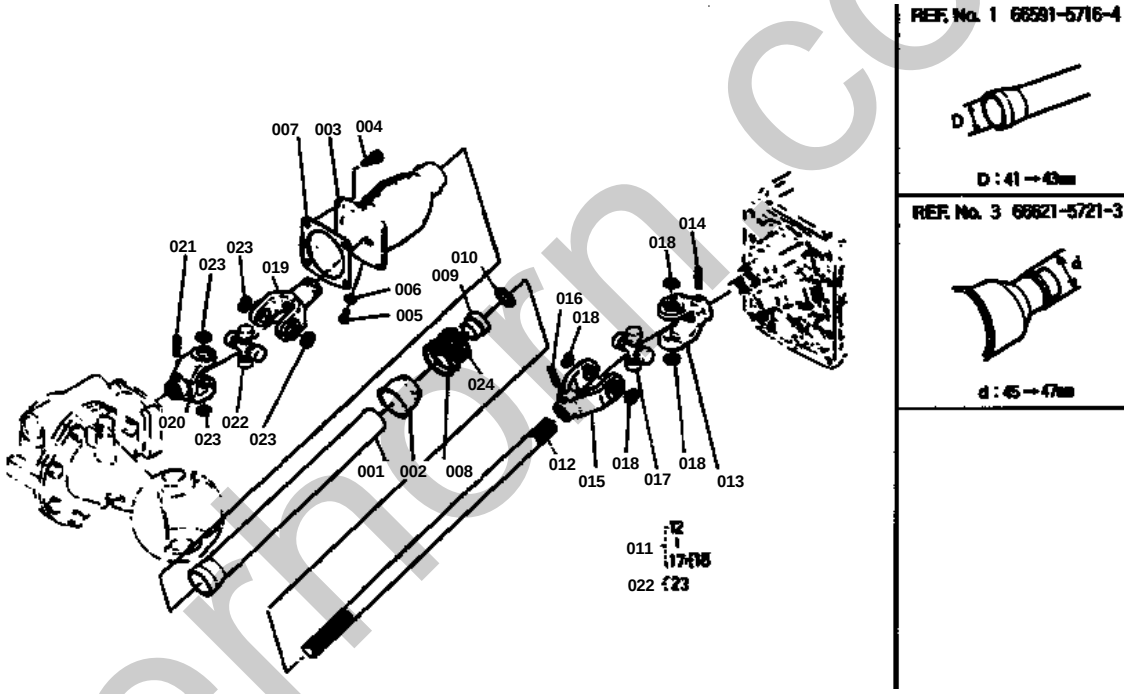

silvermorn.co.uk

↔ Interchangeable; ≠ not interchangeable; ← new for old; → old for new

REF.No	Part No.	Description	Q'ty	S.No.	I/C	REMARKS	Weight (kgf)	Weight (lb)
001	66591-57160	PIPE	1	<=16918			0.429	0.9438
001	66591-57164	PIPE	1	>=16919			0.429	0.9438
002	66591-57170	PIPE	1				0.046	0.1012
003	66621-57210	PIPE	1	<=16918			0.53	1.166
003	66621-57213	CASE JOINT	1	>=16919			0.5	1.1
004	01120-50825	BOLT	4				0	0
005	01050-50610	BOLT	1				0	0
006	04717-00600	WASHER SEAL	1				0.001	0.0022
007	66621-57220	GASKET	1				0	0
008	66591-57190	BAND	1				0.029	0.0638
009	66591-57120	BUSH	1				0.014	0.0308
010	09230-20325	SEAL OIL	1				0.007	0.0154
011	66811-57300	ASSY SHAFT DRIVER	1			REF.No.012 TO 018	1.85	4.07
012	66591-57110	SHAFT DRIVER	1				1.195	2.629
013	66621-57320	JOINT	1				0.275	0.605
014	05411-00430	PIN SPRING	1				0.002	0.0044
015	66591-56410	JOINT	1				0.252	0.5544
016	05411-00628	PIN SPRING	1				0.004	0.0088
017	66591-56320	ASSY JOINT	1			REF.No.018	0.185	0.407
018	04611-00200	CIR-CLIP INTERNAL	4				0.001	0.0022
019	66591-56340	JOINT	1				0.338	0.7436
020	66621-57320	JOINT	1				0.275	0.605
021	05411-00430	PIN SPRING	1				0.002	0.0044
022	66591-56320	ASSY JOINT	1			REF.No.023	0.185	0.407
023	04611-00200	CIR-CLIP INTERNAL	4				0.001	0.0022
024	66591-57150	BAND 1	1				0	0

silverhorn.co.uk

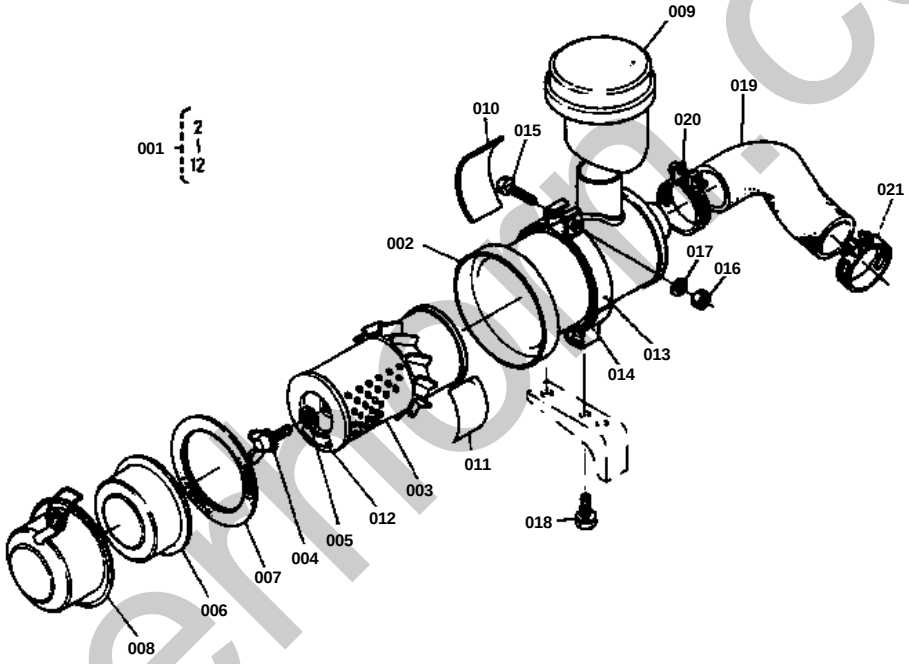

REF. No. 1 15372-1101-4
10 15372-8745-2
Change of sentence.

silvermoon.co.uk

↔ Interchangeable; ≠ not interchangeable; ← new for old; → old for new

REF.No	Part No.	Description	Q'ty	S.No.	I/C	REMARKS	Weight (kgf)	Weight (lb)
001	15372-11010	ASSY AIR CLEANER	1	<=16140		REF.No.002 TO 012	0	0
001	15372-11014	ASSY AIR CLEANER	1	>=10001		REF.No.002 TO 012	0	0
002	15241-11150	BODY AIR CLEANER	1				0.69	1.518
003	15221-11220	ELEMENT AIR CLEANER	1				0	0
004	15221-92620	BOLT WING	1				0.04	0.088
005	15221-94430	WASHER SEAL	1				0.004	0.0088
006	15221-11410	COVER BAFFLE	1				0.104	0.2288
007	15221-11170	GASKET COVER	1				0.01	0.022
008	15241-11160	COVER AIR CLEANER	1				0.255	0.561
009	15241-11350	CAP AIR CLEANER	1				0.48	1.056
010	15372-87450	LABEL AIR CLEANER	1	<=16140			0	0
010	15372-87452	LABEL AIR CLEANER	1	>=10001			0.001	0.0022
011	15227-87480	LAVEL A/C ELEMENT	1				0.004	0.0088
012	15221-87770	MARK	1				0	0
013	15371-11250	BAND AIR CLEANER	1				0	0
014	15371-11870	CUSHION	1				0.025	0.055
015	01222-50830	BOLT	1				0.013	0.0286
016	02114-50080	NUT	1				0.005	0.011
017	04512-50080	WASHER SPRING	1				0.001	0.0022
018	01120-50816	BOLT	2				0	0
019	15262-11620	PIPE INLET	1				0.2	0.44
020	15221-11720	BAND PIPE	1				0.03	0.066
021	15261-11720	BAND PIPE	1				0.03	0.066

silverhorn.co.uk

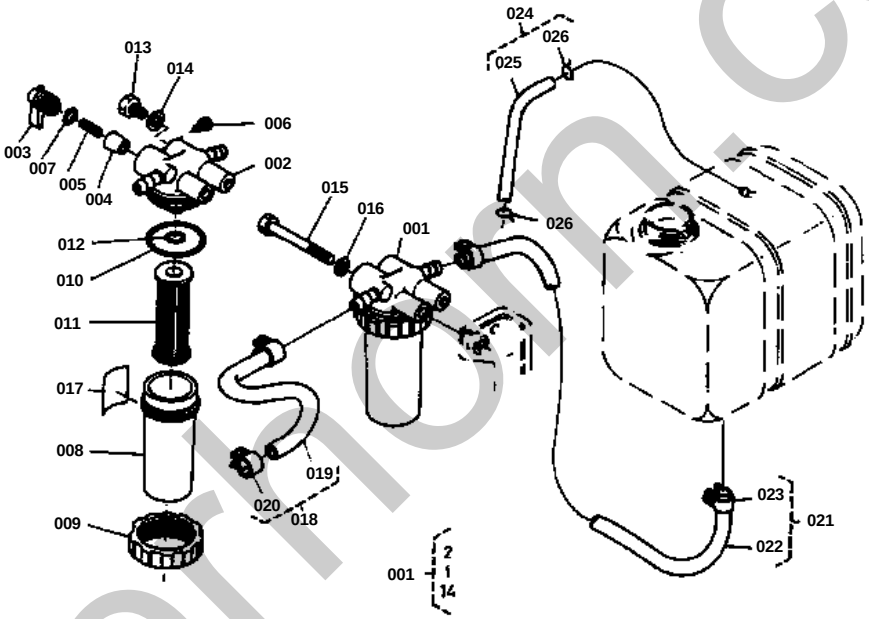

REF. No. 17 66706-5831-0
English → English and French.

REF. No. 18 15371-4203-0
19 15371-4218-0
length : 360 → 365mm

silverhorn.co.uk

FUEL FILTER GROUP

↔ Interchangeable; ≠ not interchangeable; ← new for old; → old for new

REF.No	Part No.	Description	Q'ty	S.No.	I/C	REMARKS	Weight (kgf)	Weight (lb)
001	15261-43010	ASSY FILTER FUEL	1			REF.No.002 TO 014.	0	0
002	99999-99999	BLANK	0			ORDER BY REF.No.001	0	0
003	15231-43520	LEVER COCK	1				0	0
004	15231-43810	VALVE TAPER	1				0.002	0.0044
005	14301-43820	SPRING LEVER	1				0.001	0.0022
006	14301-43830	SCREW LEVER	1				0.001	0.0022
007	14301-43840	O RING LEVER	1				0.001	0.0022
008	15231-43580	CUP FILTER	1				0	0
009	14301-43590	RETERING RING	1				0.054	0.1188
010	14301-43650	O RING FILTER	1				0.001	0.0022
011	15231-43560	ASSY ELEMENT	1				0.03	0.066
012	04811-00100	O RING FILTER	1				0.001	0.0022
013	15231-43283	PLUG BREATHER	2				0.003	0.0066
014	04810-00060	O RING	2				0.001	0.0022
015	01150-50865	BOLT	1				0	0
016	04512-50080	WASHER SPRING	1				0.001	0.0022
017	15232-88460	LABEL	1	<=16140			0.001	0.0022
017	66706-58310	LABEL	1	>=10001			0.001	0.0022
018	66621-35610	ASSY PIPE FUEL	1				0.058	0.1276
018	15371-42030	ASSY PIPE FUEL	1	>=10001			0	0
019	99999-99999	BLANK	0			ORDER BY REF.No.018	0	0
019	99999-99999	BLANK	0			ORDER BY REF.No.018	0	0
020	14301-42750	CLIP PIPE	2				0.005	0.011
021	66811-35630	ASSY PIPE FUEL 1	1			REF.No.022 023	0.028	0.0616
022	99999-99999	BLANK	0			ORDER BY REF.No.021	0	0
023	14301-42750	CLIP PIPE	2				0.005	0.011
024	66621-35660	ASSY PIPE OVER FLOW	1			REF.No.025 026	0.025	0.055
025	99999-99999	BLANK	0			ORDER BY REF.No.024	0	0
026	10244-42320	CLIP PIPE	2				0.001	0.0022

silverhorn.co.uk

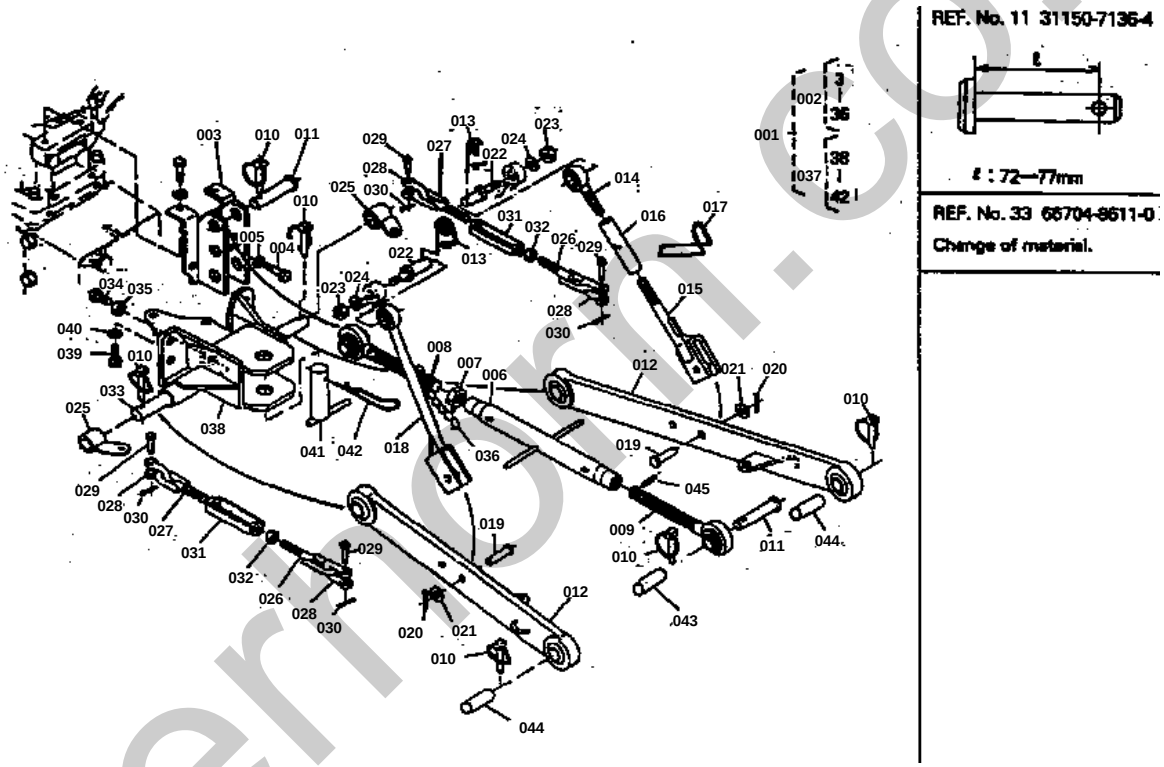

silvermoor.co.uk

↔ Interchangeable; ≠ not interchangeable; ← new for old; → old for new

REF.No	Part No.	Description	Q'ty	S.No.	I/C	REMARKS	Weight (kgf)	Weight (lb)
001	66494-65101	ASSY 3-POINT LINKAGE	1			REF.No.002 037	0	0
003	96316-06110	BRACKET	1				1.22	2.684
004	01150-51230	BOLT	2				0.036	0.0792
005	04512-50120	WASHER SPRING	2				0.003	0.0066
006	66706-65330	LINK TOP	1				0	0
007	66706-65340	NUT TOP LINK	1				0.05	0.11
008	66706-65350	JOINT TOP LINK LH	1				0	0
009	66706-65360	JOINT TOP LINK RH	1				0	0
010	34150-37640	PIN SET	6				0.06	0.132
011	96316-05560	PIN JOINT	2	<=16620			0	0
011	31150-71360	PIN JOINT	2	>=10001			0.166	0.3652
012	66494-65210	LINK LOWER	2				5	11
013	66713-34340	PIN SNAP	2				0.013	0.0286
014	66494-65230	ROD LIFT RH	1				0.237	0.5214
015	66494-65240	ROD LIFT RH	1				0.559	1.2298
016	66706-65250	NUT	1				0	0
017	66706-65260	SPRING	1				0.041	0.0902
018	66494-65270	ROD LIFT LH	1				0.86	1.892
019	05122-51240	PIN JOINT	2				0.039	0.0858
020	05511-50425	PIN SPLIT	2				0.003	0.0066
021	04013-50120	WASHER PLAIN	2				0	0
022	66706-65280	PIN LIFT	2				0.082	0.1804
023	02174-50120	NUT	2				0.01	0.022
024	04512-50120	WASHER SPRING	2				0.003	0.0066
025	66494-65290	BRACKET	2				0.167	0.3674
026	66706-65310	TURN BACKLE BOLT RH	2				0.153	0.3366
027	66706-65320	TURN BACKLE BOLT LH	2				0.153	0.3366
028	66706-65370	JOINT CHAIN	4				0.07	0.154
029	66706-65380	PIN	4				0.021	0.0462
030	05511-50320	PIN SPLIT	4				0.002	0.0044
031	96316-05580	TURN BACKLE	2				0.14	0.308
032	02112-50120	NUT	2				0.007	0.0154
033	66704-65110	PIN LOWER LINK	1				0	0
033	66704-86110	PIN LOWER LINK	1				1.19	2.618
034	66704-65120	BOLT SET	1				0.023	0.0506
035	02118-50100	NUT	1				0.005	0.011
036	66616-34550	CHAIN	1				0.66	1.452
037	66494-00550	ASSY HITCH	1			REF.No.038 TO 042	5.4	11.88
038	66494-01550	HITCH	1				5.38	11.836
039	01153-51232	BOLT	3				0.04	0.088
040	04512-50120	WASHER SPRING	3				0.003	0.0066
041	96316-06320	PIN HITCH	1				0.46	1.012
042	31150-29730	PIN SNAP	1				0.044	0.0968
043	66494-65310	BUSH 1	1				0.02	0.044
044	66494-65320	BUSH 2	2				0.05	0.11
045	04511-00422	PIN SPRING	2				0	0

silverthorn.co.uk

IMAGE NOT AVAILABLE

silverhorn.co.uk

↔ Interchangeable; ≠ not interchangeable; ← new for old; → old for new

REF.No	Part No.	Description	Q'ty	S.No.	I/C	REMARKS	Weight (kgf)	Weight (lb)
001	66704-61200	ASSY TOOLS	1				1.8	3.96
002	15241-86610	WRENCH FILTER	1				0.133	0.2926
003	66494-62910	MANUAL INSTRUCTION	1	<=10295			0	0
003	66704-62915	MANUAL INSTRUCTION	1	>=10296			0	0
003	66701-62910	MANUAL INSTRUCTION	1				0.122	0.2684
004	66494-62920	PARTS LIST	1				0.23	0.506
005	54711-41830	SWITCH HORN	1			OPTIONAL PARTS FOR E-P	0.014	0.0308
006	66591-55300	ASSY HORN	1			OPTIONAL PARTS FOR E-P	0.15	0.33
007	01202-50612	BOLT	1			OPTIONAL PARTS FOR E-P	0.005	0.011
008	66494-81200	KIT HORN	1			REF.No.013 TO 019 KIT FOR E-PT CANADA	0.2	0.44
009	66591-55300	ASSY HORN	1			KIT FOR E-PT CANADA	0.15	0.33
010	32150-32240	SWITCH HORN	1			KIT FOR E-PT CANADA	0.013	0.0286
011	01202-50612	BOLT	2			KIT FOR E-PT CANADA	0.005	0.011
012	66494-81210	SERVICE MANUAL	1			KIT FOR E-PT CANADA	0.03	0.066
013	66704-82200	ASSY L/W WIRE HARN.	1				0.28	0.616
015	66704-82100	ASSY LEAD WIRE H/M	1				0.25	0.55
016	66704-86110	PIN LOWER LINK	1				1.19	2.618
017	66704-86200	ASSY GEAR	1			REF.No.018 019	0.74	1.628
018	66704-56950	GEAR SPUR 12	1				0.162	0.3564
019	66704-56960	GEAR SPUR 25	1				0.58	1.276
020	66704-83600	ASSY SPRING AND COL.	1			REF.No.021 022	0.025	0.055
021	66591-36350	SPRING	1				0.01	0.022
022	66591-36370	COLLAR	1				0.016	0.0352
023	66494-88500	KIT PTO FRONT	1			REF.No.024 TO 034	2.3	5.06
024	15263-74280	PULLEY FAN DRIVE	1				0.85	1.87
025	66704-88520	WASHER CRANKSHAFT	1				0.008	0.0176
026	66704-88530	FRANGE	1				0.4	0.88
027	01123-50825	BOLT	3				0.013	0.0286
028	04013-50080	WASHER PLAIN	3				0	0
029	66494-88540	SHAFT FRONT PTO	1				0.92	2.024
030	02118-50100	NUT	1				0.005	0.011
031	04512-50100	WASHER SPRING	1				0	0
032	66494-88550	SHIM 1	2				0.012	0.0264
033	66494-88560	SHIM 2	6				0.006	0.0132
034	66494-88570	MANUAL FIXING	1				0.005	0.011
035	66704-62930	INSTRUCTION MIS.OIL	1				0.001	0.0022
036	66704-85600	HOLDER FUSE	1				0.005	0.011

silvermorn.co.uk