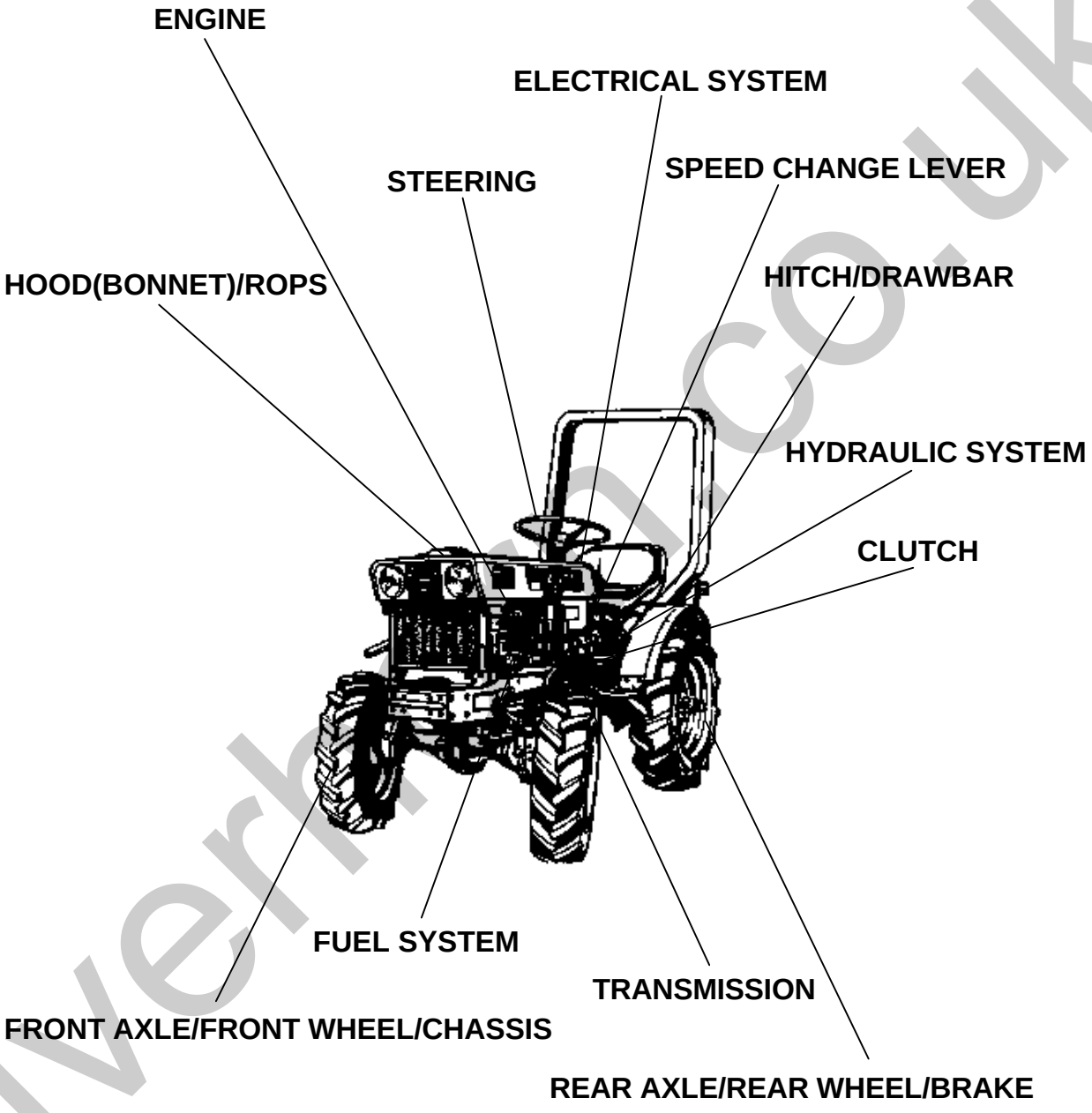

silverhill.co.uk

Item	Part No.	Description	Book
ENGINE	0101	CRANKCASE GROUP	100K0134
	0102	GEAR CASE GROUP	100K0134
	0103	HEAD COVER GROUP	100K0134
	0104	CAM SHAFT GROUP	100K0134
	0105	FUEL CAMSHAFT GROUP	100K0134
	0106	CRANKSHAFT GROUP	100K0134
	0107	BREATHER AND INJECTION PUMP GROUP	100K0134
	0108	COOLING FAN AND RADIATOR GROUP	100K0134
	0109	AIR CLEANER AND MUFFLER GROUP	100K0134
TRANSMISSION	0110	MISSION AND DIFFERENTIAL GEAR CASE GROUP	100K0134
	0111	MISSION GEAR GROUP	100K0134
	0112	DIFFRENTIAL GROUP	100K0134
SPEED CHANGE LEVER	0113	SPEED CHANGE GROUP	100K0134
REAR AXLE/REAR WHEEL/BRAKE	0114	REAR WHEEL AND BRAKE GROUP	100K0134
CLUTCH	0115	CLUTCH AND PEDAL GROUP	100K0134
HYDRAULIC SYSTEM	0116	OIL PRESSURE GROUP 1	100K0134
	0117	OIL PRESSURE GROUP 2	100K0134
	0118	CONTOL VALVE GROUP	100K0134
STEERING	011901	STEERING GROUP	100K0134
	011902	STEERING GROUP	100K0134
HOOD(BONNET)/ROPS	0120	SEAT AND FENDER GROUP	100K0134
	0121	BONNET AND RADIATOR SUPPORT GROUP	100K0134
ELECTRICAL SYSTEM	0122	PANEL GROUP	100K0134
	0123	FUEL TANK AND BATTERY GROUP	100K0134
FUEL SYSTEM	0124	FUEL FILTER GROUP	100K0134
FRONT AXLE/FRONT WHEEL/CHASSIS	0125	FRONT AXLE CASE GROUP [B6000]	100K0134
	0126	FRONT AXLE DRIVE GROUP [B6000]	100K0134
	0127	FRONT WHEEL AND STEERING GROUP [B6000]	100K0134
	0129	ACCELERTOR PEDAL GROUP	100K0134
	0130	BALUSTRADE GROUP	100K0134
HITCH/DRAWBAR	0131	3 POINT LINKAGE HITCH GROUP [P]	100K0134

silverhorn.co.uk

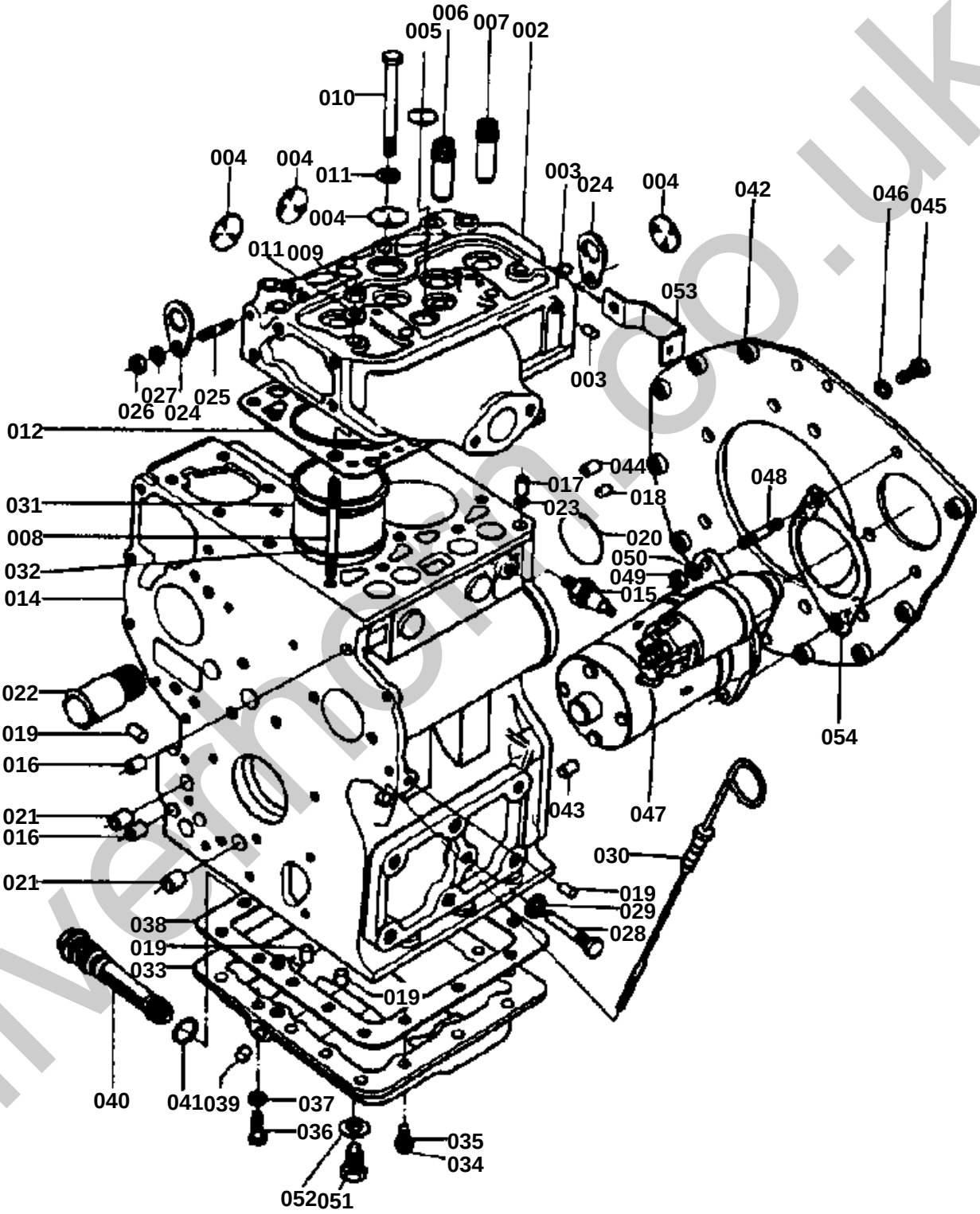

silverthorn.co.uk

CRANKCASE GROUP

↔ Interchangeable; ≠ not interchangeable; ← new for old; → old for new

REF.No	Part No.	Description	Q'ty	S.No.	I/C	REMARKS	Weight (kgf)	Weight (lb)
001	15231-03200	COMP HEAD CYLINDER	1			002 TO 007	9	19.8
002	15231-03116	HEAD CYLINDER	1				0	0
003	14301-33622	PLUG PIN	2				0	0
004	06311-75028	PLUG BELCH	4				0.01	0.022
005	06311-75020	PLUG BELCH	1				0.004	0.0088
006	15231-13543	GUIDE INLET VALVE	2				0	0
007	15231-13563	GUIDE EXHAUST VALVE	2				0	0
008	15221-03412	STUD CYLINDER HEAD	2				0	0
009	15221-03510	NUT CYLINDER HEAD	2				0.008	0.0176
010	15231-03450	BOLT CYLINDER HEAD	9				0.058	0.1276
011	15221-03540	WASHER PLAIN	11				0.003	0.0066
012	15231-03312	GASKET CYLINDER HEAD	1				0	0
013	15231-01012	COMP CRANKCASE	1			014 TO 022	0	0
014	15231-01122	CRANKCASE	1				0	0
015	15231-39013	SWITCH OIL	1				0	0
016	15231-33960	PIN PIPE	2				0.001	0.0022
017	15221-33650	PIN PIPE	1				0.004	0.0088
018	15221-33620	PLUG PIN	1				0.002	0.0044
019	14301-33622	PLUG PIN	6				0	0
020	06311-75045	PLUG BELCH	1				0.026	0.0572
021	15231-33952	PIN PIPE	2				0	0
022	15231-72840	PIPE WATER 3	1				0.082	0.1804
023	15221-33700	O RING	1				0.001	0.0022
024	15221-01750	HOOK ENGINE	2				0.04	0.088
025	01513-00818	STUD	2				0	0
026	02114-00080	NUT	2				0	0
027	04512-00080	WASHER SPRING	2				0	0
028	15231-04552	BOLT KNOCK	1				0	0
029	15021-33660	PACKING	1				0.001	0.0022
030	15231-36412	GAUGE OIL	1				0	0
031	15231-02315	LINER CYLINDER	2				0	0
032	15231-02350	PACKING CYLINDER LIN	4				0.002	0.0044
033	15231-01614	COVER OIL	1				0	0
034	01053-50616	BOLT	14				0.005	0.011
035	04512-50060	WASHER SPRING	14				0	0
036	01053-50635	BOLT	1				0.009	0.0198
037	04512-50060	WASHER SPRING	1				0	0
038	15231-01660	PACKING OIL COVER	1				0	0
039	14301-33630	PLUG PIN	1				0.001	0.0022
040	15231-32012	ASSY FILTER OIL	1				0	0
041	14301-32580	O RING	1				0	0
042	15231-04623	PLATE	1				0	0
043	05012-00814	PIN STRAIGHT	1				0.006	0.0132
044	05012-00820	PIN STRAIGHT	1				0.008	0.0176
045	01173-51025	BOLT	8				0.021	0.0462
046	04512-50100	WASHER SPRING	8				0	0
047	15231-63012	ASSY STARTER	1				0	0
048	01511-50832	STUD	2				0.015	0.033
049	02113-50080	NUT	2				0	0
050	04512-50080	WASHER SRPING	2				0	0
051	15231-33710	PLUG	1				0.032	0.0704
052	04714-00200	PACKING	1				0.002	0.0044
053	15231-12492	STAY	1				0	0
054	66591-51160	PACKING	1				0	0

silverhorn.co.uk

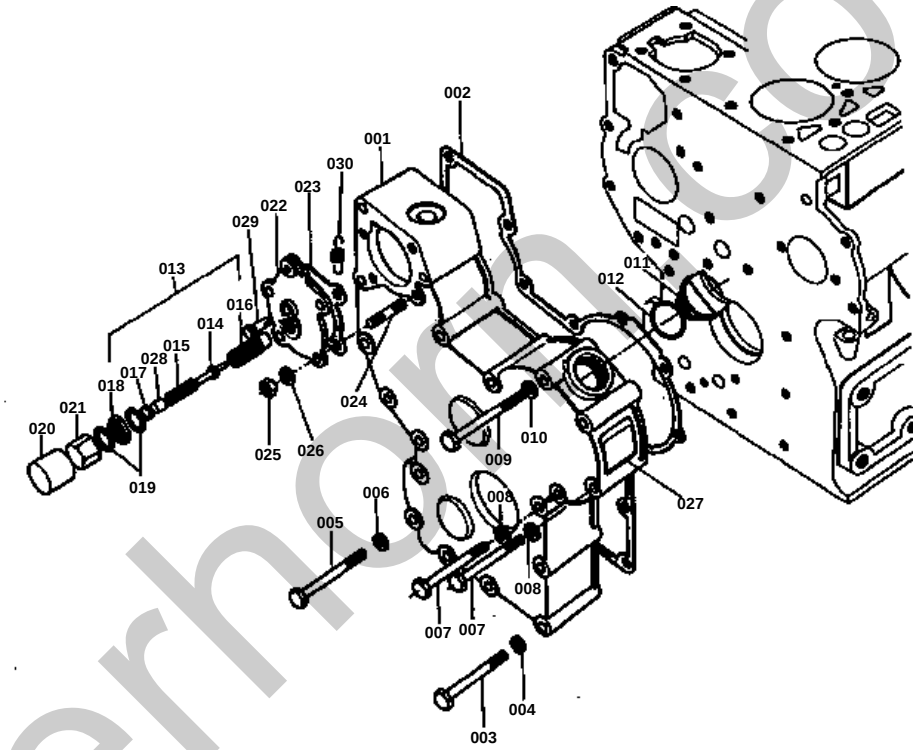

silverhorn.co.uk

GEAR CASE GROUP

↔ Interchangeable; ≠ not interchangeable; ← new for old; → old for new

REF.No	Part No.	Description	Q'ty	S.No.	I/C	REMARKS	Weight (kgf)	Weight (lb)
001	15231-04114	CASE GEAR	1				0	0
002	15231-04130	PACKING GEAR CASE	1				0	0
003	01053-50665	BOLT	15				0.015	0.033
004	04512-50060	WASHER SPRING	15				0	0
005	01053-50675	BOLT	1				0.015	0.033
006	04512-50060	WASHER SPRING	1				0	0
007	01053-50670	BOLT	2				0.014	0.0308
008	04512-50060	WASHER SPRING	2				0	0
009	01053-50680	BOLT	1				0.02	0.044
010	04512-50060	WASHER SPRING	1				0	0
011	15221-33140	PLUG OIL FILLER	1				0.038	0.0836
012	04811-50300	O RING	1				0.001	0.0022
013	15231-54103	APPARATUS FUEL LIMIT	1			014 TO 018	0	0
014	15231-54170	PIN	1				0	0
015	15231-54230	SPIRNG	1				0.002	0.0044
016	15221-54130	BODY	1				0	0
017	14301-54430	SCREW	1				0.001	0.0022
018	15231-54250	NUT LOCK	1				0	0
019	14301-54150	PACKING	2				0.001	0.0022
020	14301-54420	CAP	1				0.005	0.011
021	14301-54222	NUT CAP	1				0	0
022	15231-54142	BRACKET	1				0.058	0.1276
023	15231-54160	PACKING	1				0	0
024	01202-50616	BOLT	4				0.006	0.0132
025	02014-50060	NUT	4				0.003	0.0066
026	04512-50060	WASHER SPIRNG	4				0	0
027	15232-88222	LABEL	1				0	0
028	15221-54190	SPACER	1				0	0
029	15221-56280	PIN START SPRING	1				0.006	0.0132
030	15231-56482	SPRING START	1				0	0

silverhorn.co.uk

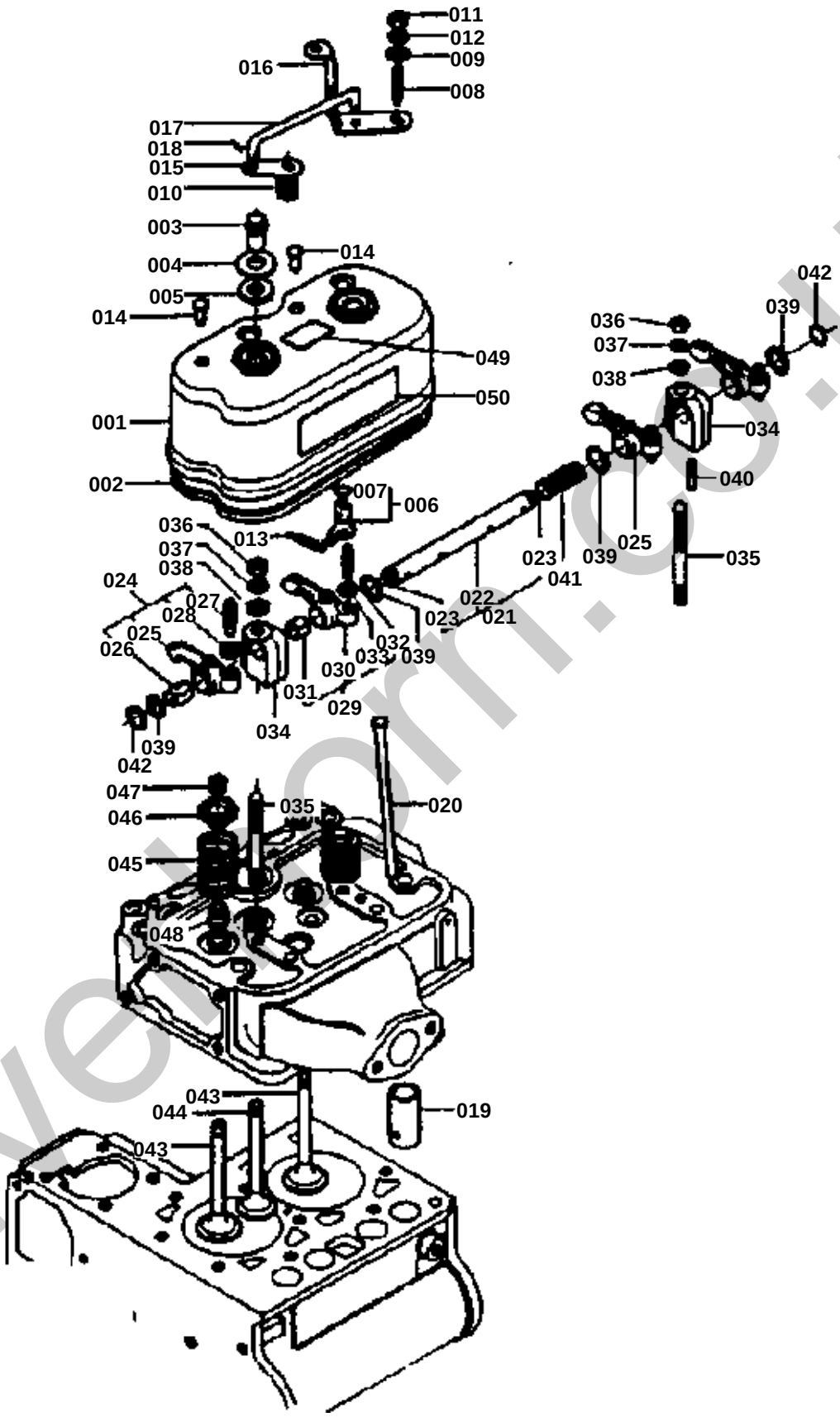

silverborn.co.uk

HEAD COVER GROUP

↔ Interchangeable; ≠ not interchangeable; ← new for old; → old for new

REF.No	Part No.	Description	Q'ty	S.No.	I/C	REMARKS	Weight (kgf)	Weight (lb)
001	15231-14510	COVER HEAD	1				0	0
002	15231-14520	PACKING HEAD COVER	1				0.005	0.011
003	15221-14620	NUT HEAD COVER	2				0.02	0.044
004	15221-14640	WASHER HEAD COVER	2				0.017	0.0374
005	15221-14630	PACKING HEAD COVER N	2				0.003	0.0066
006	15231-66040	ASSY SHAFT DECOMPRES	2			PART 007 INCLUDED	0.017	0.0374
007	04811-10100	O RING	2				0.001	0.0022
008	10211-66353	BOLT DECOMPRESS	2				0	0
009	10211-66373	WASHER DECOMPRESS HA	2				0	0
010	10211-66212	SPRING DECOMPRESS OU	2				0	0
011	02012-50060	NUT	2				0	0
012	04412-50060	WASHER LOCK TOOTHED	2				0.001	0.0022
013	14301-66210	SPRING DECOMPRESS IN	2				0.003	0.0066
014	14107-66292	PIN	2				0	0
015	15231-66310	LEVER DECOMPRESS OUT	1				0.01	0.022
016	15231-66192	LEVER DECOMPRESS OUT	1				0	0
017	14231-66410	JOINT DECOMPRESS	1				0	0
018	05511-50315	PIN SPLIT	2				0.002	0.0044
019	15221-15550	TAPPET	4				0	0
020	15231-15112	PUSH ROD	4				0	0
021	15231-14050	COMP SHAFT ROCKER AR	1			22 023	0.092	0.2024
022	15231-14262	SHAFT ROCKER ARM	1				0	0
023	03410-00808	PLUG	2				0.002	0.0044
024	15231-14030	COMP ROCKER ARM INLE	2			025 TO 028	0.07	0.154
025	15231-14142	ROCKER ARM INLET	2				0	0
026	15231-14180	BUSH	2				0.005	0.011
027	15231-14230	SCREW ADJUSTING	2				0.009	0.0198
028	15021-14240	NUT ADJUSTING	2				0.003	0.0066
029	15231-14040	COMP ROCKER ARM EXHA	2			030 TO 033	0.07	0.154
030	15231-14162	ROCKER ARM EXHAUST	2				0	0
031	15231-14180	BUSH	2				0.005	0.011
032	15231-14230	SCREW ADJUSTING	2				0.009	0.0198
033	15021-14240	NUT ADJUSTING	2				0.003	0.0066
034	15231-14350	BRACKET ROCKER ARM	2				0.041	0.0902
035	15231-14410	STUD	2				0.028	0.0616
036	02156-50080	NUT	2				0.004	0.0088
037	04512-50080	WASHER SPRING	2				0	0
038	04012-50080	WASHER PLAIN	2				0.001	0.0022
039	15231-14430	WASHER ROCKER ARM SH	4				0.004	0.0088
040	15231-14420	SCREW ROCKER ARM SHA	1				0.007	0.0154
041	15231-14310	SPRING ROCKER ARM	1				0.006	0.0132
042	04612-00120	CIR-CLIP EXTERNAL	2				0.001	0.0022
043	15231-13112	VALVE INLET	2				0	0
044	15231-13122	VALVE EXHAUST	2				0	0
045	15231-13240	SPRING VALVE	4				0.025	0.055
046	15231-13332	RETAINER VALVE SPRIN	4				0	0
047	15221-13360	COLLET VALVE SPRING	8				0	0
048	15231-13150	STEM-SEAL VALVE	4				0.002	0.0044
049	15232-88212	LABEL	1				0	0
050	15232-88312	LABEL OIL	1				0	0

sitemorn.co.uk

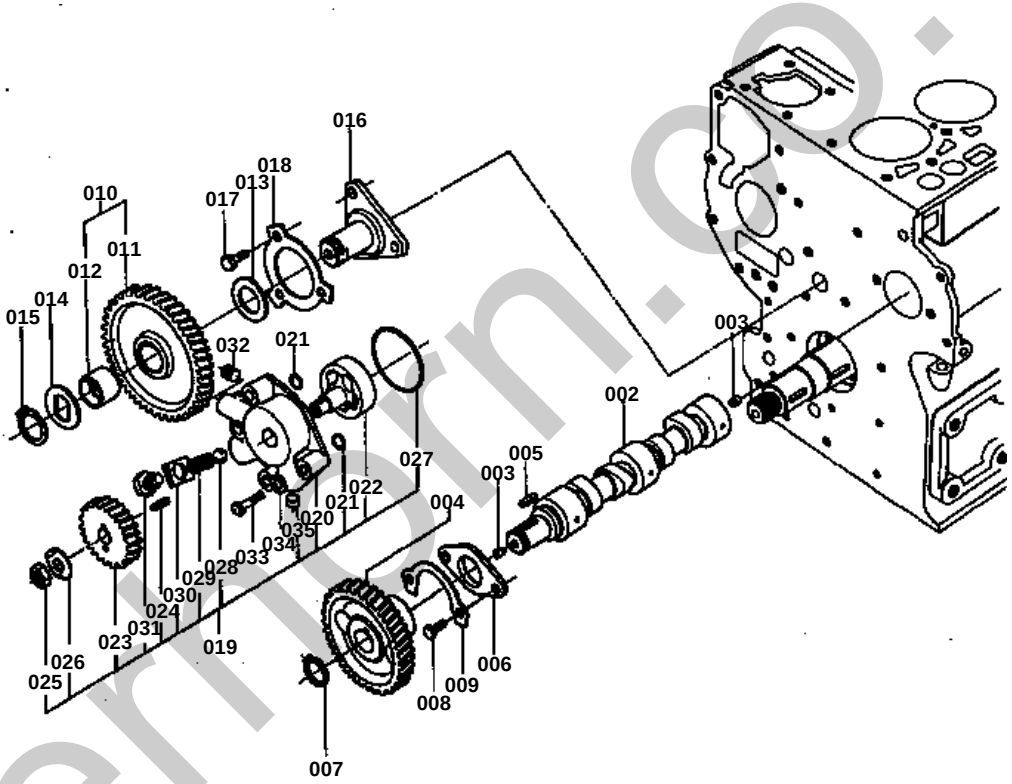

silverburn.co.uk

↔ Interchangeable; ≠ not interchangeable; ← new for old; → old for new

REF.No	Part No.	Description	Q'ty	S.No.	I/C	REMARKS	Weight (kgf)	Weight (lb)
001	15231-16010	COMP CAMSHAFT	1			002 TO 007	1.2	2.64
002	15231-16155	CAMSHAFT	1				0	0
003	15221-33630	PLUG PIN	2				0.001	0.0022
004	15231-16512	GEAR CAM	1				0	0
005	05712-00720	KEY	1				0.008	0.0176
006	15231-16220	STOPPER CAMSHAFT	1				0.055	0.121
007	04612-00220	CIR-CLIP EXTERNAL	1				0.001	0.0022
008	01153-50816	BOLT	2				0.01	0.022
009	15231-16250	WASHER	1				0.005	0.011
010	15231-24010	COMP GEAR IDLE	1			11 012	0.652	1.4344
011	15231-24212	GEAR IDLE	1				0	0
012	15231-24280	BUSH IDLE GEAR	1				0.03	0.066
013	15231-24360	COLLAR IDLE GEAR 1	1				0.01	0.022
014	15231-24370	COLLAR IDLE GEAR 2	1				0.014	0.0308
015	15231-24322	CIR-CLIP IDLE GEAR	1				0	0
016	15231-24254	SHAFT IDLE GEAR	1				0	0
017	01153-50818	BOLT	3				0.01	0.022
018	15231-24310	WASHER IDLE GEAR SHA	1				0.014	0.0308
019	15231-35010	ASSY PUMP OIL	1			020 TO 032	1.2	2.64
020	15231-35114	CASE OIL PUMP	1				0	0
021	04811-10100	O RING	2				0.001	0.0022
022	15231-35400	ASSY ROTER PUMP	1				0.14	0.308
023	15231-35660	GEAR	1				0.212	0.4664
024	05712-00410	KEY	1				0.001	0.0022
025	02116-50100	NUT	1				0.004	0.0088
026	04211-50100	WASHER CLAW	1				0.002	0.0044
027	04811-10440	O RING	1				0.001	0.0022
028	15231-36360	BALL OIL PRESSURE AD	1				0.003	0.0066
029	15231-36340	SPRING OIL PRESSURE	1				0.002	0.0044
030	15231-36330	WASHER OIL PRESSURE	1				0.004	0.0088
031	15231-36310	BOLT OIL PRESSURE AD	1				0.015	0.033
032	03410-50808	SCREW SET	1				0	0
033	01053-50640	BOLT	4				0.011	0.0242
034	04512-50060	WASHER SPRING	4				0	0
035	15231-33620	PLUG PIN	1				0	0

silverhorn.co.uk

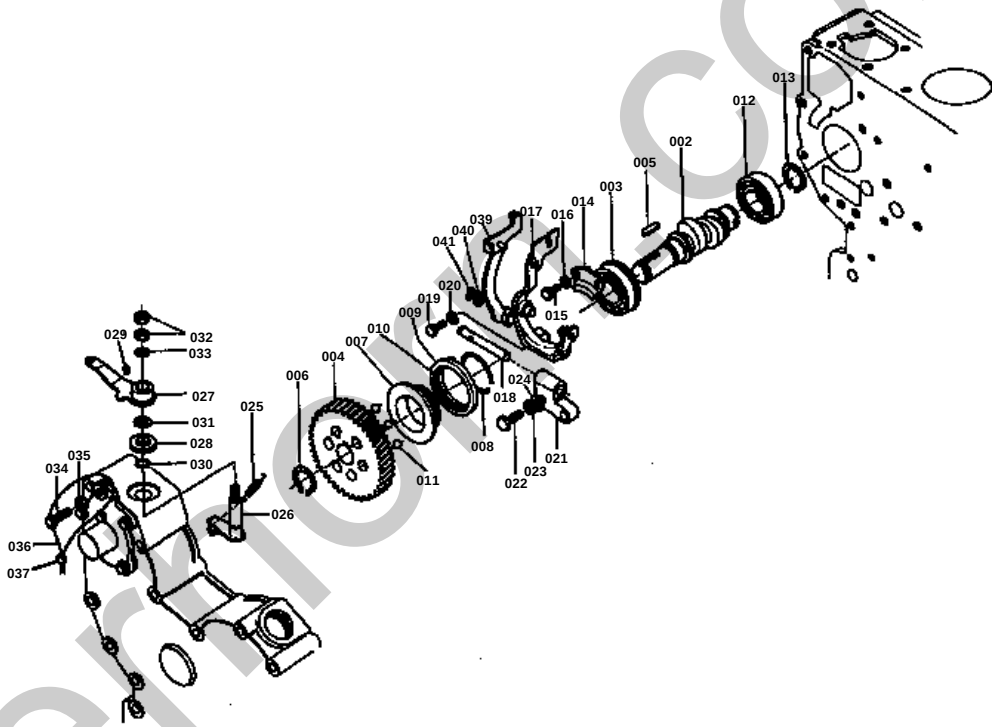

silverfox.co.uk

↔ Interchangeable; ≠ not interchangeable; ← new for old; → old for new

REF.No	Part No.	Description	Q'ty	S.No.	I/C	REMARKS	Weight (kgf)	Weight (lb)
001	15231-16022	COMP CAMSHAFT FUEL	1			002 TO 013	0	0
002	15231-16162	CAMSHAFT FUEL	1				0	0
003	08150-00002	BEARING BALL	1				0	0
004	15231-51153	GEAR FUEL CAMSHAFT	1				0	0
005	05712-00720	KEY	1				0.008	0.0176
006	04612-00220	CIR-CLIP EXTERNAL	1				0.001	0.0022
007	15231-55453	SLEEVE GOVERNOR	1				0	0
008	15231-55490	CIR-CLIP GOVERNOR SL	1				0.003	0.0066
009	15231-55694	CASE GOVERNOR BALL	1				0.033	0.0726
010	07715-03205	BALL	35				0.001	0.0022
011	07715-00805	BALL	6				0.016	0.0352
012	08100-00020	BEARING BALL	1				0.129	0.2838
013	04612-00250	CIR-CLIP EXTERNAL	1				0.002	0.0044
014	15231-16680	STOPPER FUEL CAMSHAF	1				0.02	0.044
015	01153-50814	BOLT	2				0.009	0.0198
016	04512-50080	WASHER SPRING	2				0	0
017	15231-56043	COMP LEVER FORK	1				0.19	0.418
018	15231-56153	SHAFT FORK LEVER	1				0	0
019	15021-56243	BOLT FORK LEVER SHAF	1				0	0
020	04512-50060	WASHER SPRING	1				0	0
021	15231-56233	HOLDER FORK LEVER	1				0	0
022	01153-50825	BOLT	2				0.012	0.0264
023	04512-50080	WASHER SPRING	2				0	0
024	04013-50080	WASHER PLAIN	2				0	0
025	15231-56414	SPRING GOVERNOR	1				0	0
026	15231-56070	COMP LEVER GOVERNOR	1				0.042	0.0924
027	15231-57150	LEVER SPEED CONTROL	1				0.062	0.1364
028	15231-57380	PLATE FRICTION	1				0.003	0.0066
029	05712-00408	KEY	1				0.001	0.0022
030	04811-10080	O RING	1				0.001	0.0022
031	15231-94010	WASHER PLAIN	1				0.005	0.011
032	02112-50080	NUT	2				0.003	0.0066
033	04013-50080	WASHER PLAIN	1				0	0
034	15108-57282	BOLT	1				0	0
035	02012-50060	NUT	1				0	0
036	07811-11210	WIRE	1				0.001	0.0022
037	07918-00001	LEAD SEALING	1				0.001	0.0022
038	15231-56052	ASSY LEVER FORK	1			017 TO 024 039 TO 041	0	0
039	15231-56202	COMP LEVER	1				0	0
040	13316-94010	WASHER PLAIN	1				0	0
041	04612-00100	CIR-CLIP EXTERNAL	1				0.001	0.0022

silverhorn.co.uk

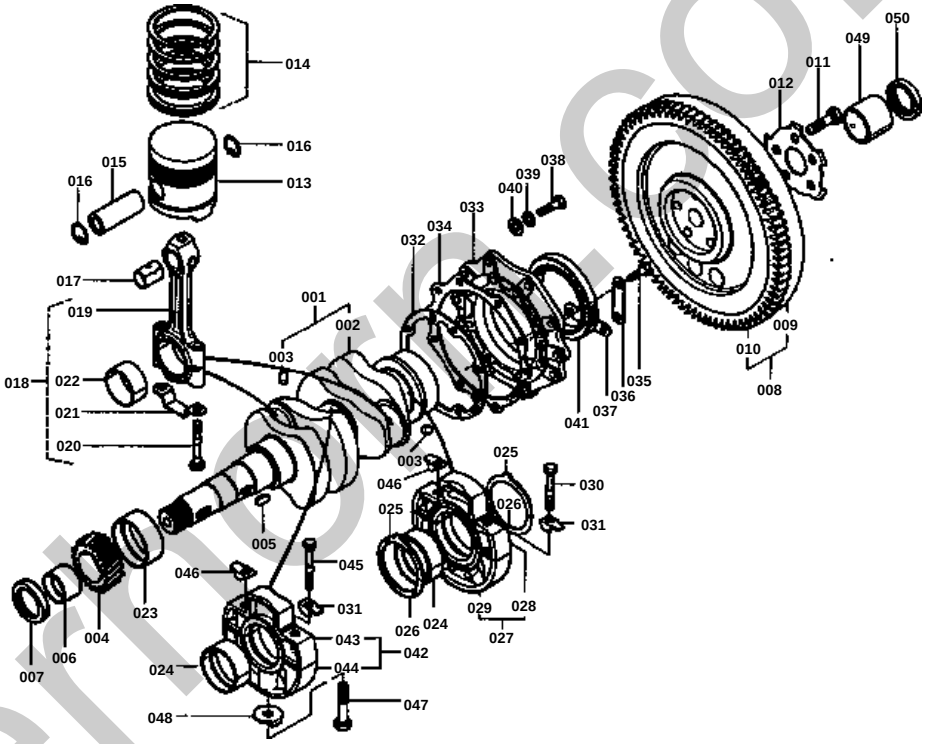

silverfox.co.uk

Kubota CRANKSHAFT GROUP

↔ Interchangeable; ≠ not interchangeable; ← new for old; → old for new

REF.No	Part No.	Description	Q'ty	S.No.	I/C	REMARKS	Weight (kgf)	Weight (lb)
001	15231-23012	COMP CRANKSHAFT	1			2 003 049 050	0	0
002	15231-23112	CRANK SHAFT	1			PARTS 049 AND 050 REPLACED AT ONCE	0	0
003	15131-01380	PLUG PIN	2				0.001	0.0022
004	15231-24113	GEAR CRANK	1				0	0
005	05712-00720	KEY	1				0.008	0.0176
006	15231-23250	COLLAR CRANK SHAFT	1				0.044	0.0968
007	09550-00007	SEAL OIL	1				0.014	0.0308
008	15231-25010	COMP FLYWHEEL	1			9 010	14	30.8
009	15231-25115	FLYWHEEL	1				0	0
010	15231-63820	GEAR RING	1				0	0
011	15231-25162	BOLT FLYWHEEL	5				0	0
012	15231-25172	WASHER FLYWHEEL	1				0	0
013	15231-21110	PISTON	2				0.354	0.7788
014	15231-21050	ASSY RING PISTON	2				0.07	0.154
015	15231-21310	PIN PISTON	2				0.13	0.286
016	15231-21330	CIR-CLIP PISTON PIN	4				0.002	0.0044
017	15231-21350	BUSH PISTON PIN	2				0.026	0.0572
018	15231-22012	COMP CONNECTING ROD	2			019 TO 022	0	0
019	15231-22112	CONNECTING ROD	2				0	0
020	15231-22140	BOLT CONNECTING ROD	4				0.026	0.0572
021	15231-22172	WASHER ROD BOLT	2				0	0
022	15231-22310	METAL CRANK PIN	4				0.036	0.0792
023	15231-28472	METAL CRANK PIN 1	1				0	0
024	15231-23460	METAL CRANK PIN 2	4				0.064	0.1408
025	15231-23470	METAL SIDE 1	2				0.012	0.0264
026	15231-23480	METAL SIDE 2	2				0.012	0.0264
027	15231-04063	ASSY CASE MAIN BEARI	1			28 029	0	0
028	15231-04913	CASE MAIN BEARING 1	1				0	0
029	15231-04922	CASE MAIN BEARING 2	1				0	0
030	15231-04540	BOLT 1	2				0.026	0.0572
031	15231-04573	WASHER LOCK 1	2				0.004	0.0088
032	15231-04360	PACKING LOCK	1				0	0
033	15231-04812	COVER BEARING	1				0	0
034	15231-04820	PACKING BEARING COVE	1				0	0
035	01153-50830	BOLT	8				0	0
036	15231-06350	WASHER LOCK 1	3				0.004	0.0088
037	15231-06360	WASHER LOCK 2	1				0.007	0.0154
038	01153-50822	BOLT	8				0.011	0.0242
039	04512-50080	WASHER SPRING	8				0	0
040	04012-50080	WASHER PLAIN	8				0.001	0.0022
041	09560-00006	SEAL OIL	1				0	0
042	15231-04072	ASSY CASE MAIN BEARI	1			43 044	0	0
043	15231-04932	CASE MAIN BEARIANG 1	1				0	0
044	15231-04942	CASE MAIN BEARIANG 2	1				0	0
045	15231-04540	BOLT 1	2				0.026	0.0572
046	15231-04580	WASHER LOCK 2	2				0.002	0.0044
047	15231-04560	BOLT 2	1				0.042	0.0924
048	15221-04590	WASHER LOCK 3	1				0.005	0.011
049	32160-15160	BEARING	1				0.005	0.011
050	09400-16267	SEAL OIL	1				0.005	0.011

silverhorn.co.uk

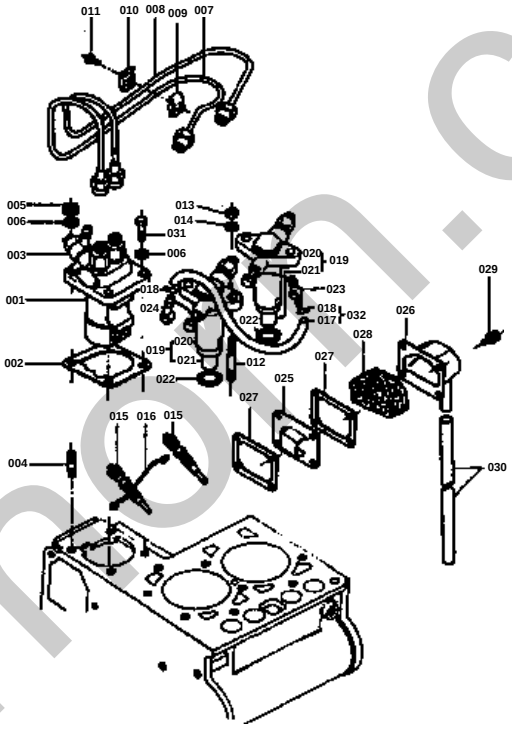

silverhorn.co.uk

↔ Interchangeable; ≠ not interchangeable; ← new for old; → old for new

REF.No	Part No.	Description	Q'ty	S.No.	I/C	REMARKS	Weight (kgf)	Weight (lb)
001	15231-51012	ASSY PUMP INJECTION	1				0	0
002	15001-52113	SHIM INJECTION PUMP	5				0	0
003	14111-42412	JOINT FUEL PIPE	1				0	0
004	01513-50822	STUD	1				0.01	0.022
005	02156-50080	NUT	1				0.004	0.0088
006	04512-50080	WASHER SPRING	4				0	0
007	15231-53710	PIPE INJECTION 1	1				0.112	0.2464
008	15231-53720	PIPE INJECTION 2	1				0.12	0.264
009	15231-53850	CLAMP PIPE 1	1				0.008	0.0176
010	15121-53860	CLAMP 2	1				0	0
011	03024-50520	BOLT	1				0.004	0.0088
012	01511-00855	STUD	4				0	0
013	02114-50080	NUT	4				0.005	0.011
014	04512-50080	WASHER SPRING	4				0	0
015	15231-65512	PLUG GLOW	2				0.035	0.077
016	15231-65560	CORD GLOW PLUG	1				0.003	0.0066
017	15231-42520	PIPE	1				0	0
018	10244-42320	CLIP	2				0.001	0.0022
019	15231-53002	COMP HOLDER NOZZLE	2			20 021	0	0
020	15231-53012	ASSY HOLDER NOZZLE	2				0	0
021	15231-53610	PIECE NOZZLE	2				0.038	0.0836
022	17011-53620	PACKING	2				0.003	0.0066
023	15103-42570	JOINT FUEL 1	1				0.008	0.0176
024	14117-42560	JOINT FUEL 2	1				0.007	0.0154
025	15231-05110	BREATHER	1				0.04	0.088
026	15231-05410	COVER BREATHER	1				0.056	0.1232
027	15231-05130	PACKING BREATHER	2				0	0
028	15231-05672	ELEMENT BREATHER	1				0	0
029	01202-50612	BOLT	4				0.005	0.011
030	15231-05510	PIPE BREATHER	1				0.03	0.066
031	01153-50822	BOLT	3				0.011	0.0242
032	15231-42300	ASSY PIPE	1			17 018	0	0

silverhorn.co.uk

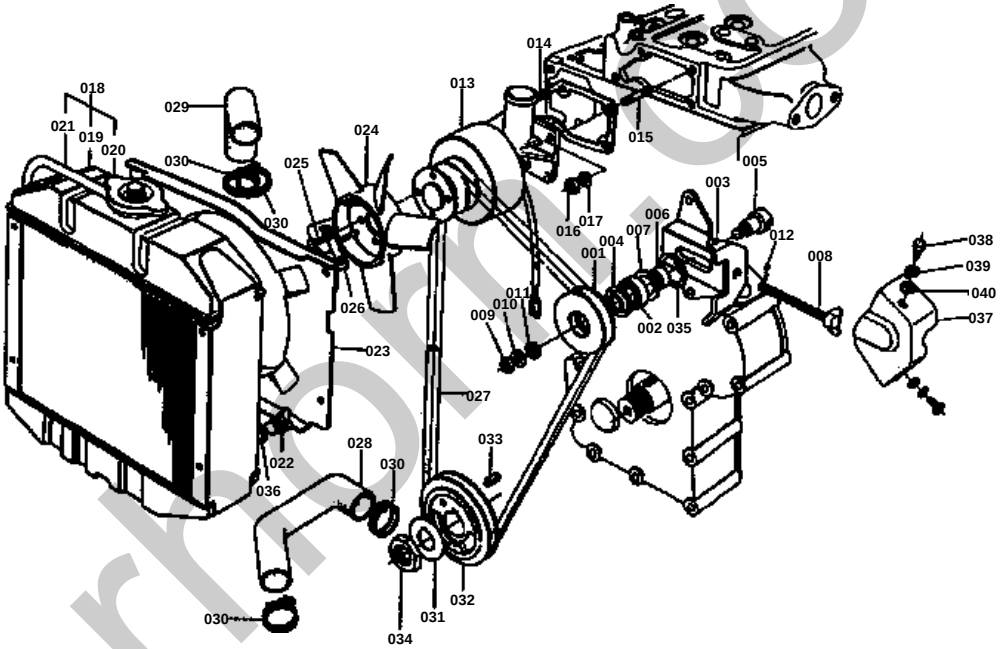

silverhorse.co.uk

↔ Interchangeable; ≠ not interchangeable; ← new for old; → old for new

REF.No	Part No.	Description	Q'ty	S.No.	I/C	REMARKS	Weight (kgf)	Weight (lb)
001	14301-74323	PULLEY TENSION	1				0	0
002	14301-74192	BEARING TENSION PULL	1				0	0
003	15231-74412	BRACKET TENSION PULL	1				0	0
004	15231-74770	COVER TENSION PULLEY	1				0.004	0.0088
005	15231-74330	SHAFT TENSION PULLEY	1				0.093	0.2046
006	14301-74432	COLLAR TENSION PULLE	1				0	0
007	14301-74782	COVER TENSION PULLEY	1				0	0
008	14311-74970	BOLT TENSION	1				0.052	0.1144
009	02018-50100	NUT	1				0.011	0.0242
010	04512-50100	WASHER SPRING	1				0	0
011	04013-50100	WASHER PLAIN	1				0	0
012	14311-74980	WIRE	1				0.001	0.0022
013	15231-64012	ASSY DYNAMO	1				0	0
014	15231-72920	PACKING DYNAMO	1				0	0
015	01513-50820	STUD	4				0	0
016	02113-50080	NUT	4				0	0
017	04512-50080	WASHER SPRING	4				0	0
018	15231-72060	ASSY RADIATOR	1			019 TO 022	5	11
019	15231-72110	RADIATOR	1			020 TO 022	0	0
020	15231-72632	CAP RADIATOR	1				0	0
021	15231-72710	PIPE WATER OVER FLOW	1				0	0
022	15231-73110	COCK DRAIN	1				0.006	0.0132
023	15231-72014	COVER FAN	1				0	0
024	15231-72420	FAN	1				0.155	0.341
025	01053-50612	BOLT	4				0.004	0.0088
026	15231-74190	WASHER FAN	2				0.004	0.0088
027	15231-72530	BELT FAN	1				0.066	0.1452
028	15231-72850	PIPE WATER 1	1				0.2	0.44
029	15231-72940	PIPE WATER 2	1				0.104	0.2288
030	15231-72780	BAND	4				0.022	0.0484
031	15231-23370	WASHER CRANK SHAFT	1				0.018	0.0396
032	15231-74284	PULLEY FAN DRIVE	1				0	0
033	05712-00720	KEY	1				0.008	0.0176
034	15231-73350	NUT CRANK SHAFT	1				0	0
035	04611-00400	CIR-CLIP INTERNAL	1				0.005	0.011
036	15231-96690	PACKING	1				0.001	0.0022
037	15231-74342	COVER TENSION PULLEY	1				0	0
038	01053-50610	BOLT	2				0.004	0.0088
039	04512-50060	WASHER SPRING	2				0	0
040	04012-50060	WASHER PLAIN	2				0.001	0.0022

silverhorn.co.uk

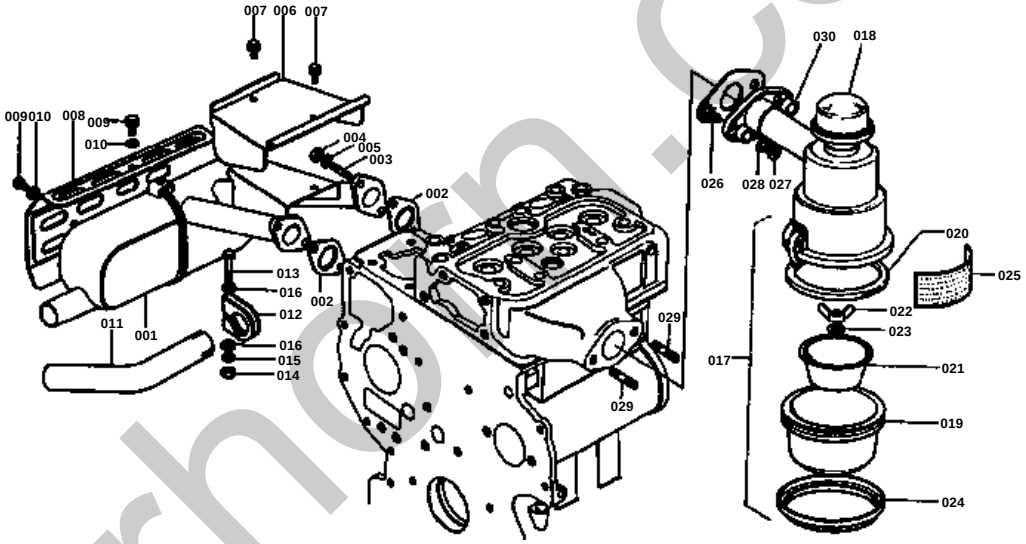

silverhorn.co.uk

↔ Interchangeable; ≠ not interchangeable; ← new for old; → old for new

REF.No	Part No.	Description	Q'ty	S.No.	I/C	REMARKS	Weight (kgf)	Weight (lb)
001	15231-12114	MUFFLER	1				0	0
002	15231-12230	PACKING MUFFLER	2				0	0
003	15231-91490	STUD	4				0.008	0.0176
004	02114-50080	NUT	4				0.005	0.011
005	04512-50080	WASHER SPRING	4				0	0
006	15231-12450	COVER MUFFLER 1	1				0.172	0.3784
007	01202-50612	BOLT	2				0.005	0.011
008	66591-56420	COVER MUFFLER 2	1				0.021	0.0462
009	01202-20612	BOLT	3				0	0
010	04014-20060	WASHER PLAIN	3				0	0
011	66591-54633	PIPE EXHAUST	1				0	0
012	66591-54643	BAND	1				0	0
013	01150-50855	BOLT	1				0.022	0.0484
014	02113-50080	NUT	1				0	0
015	04512-50080	WASHER SPRING	1				0	0
016	04014-50080	WASHER PLAIN	2				0.003	0.0066
017	15231-11012	ASSY CLEANER AIR	1			018 TO 025 030	0	0
018	15231-11200	COMP CASE AIR CLEANE	1				0.9	1.98
019	10283-11240	OIL PAN AIR CLEANER	1				0.096	0.2112
020	10283-11210	PACKING AIR CLEANER	1				0.048	0.1056
021	10283-11440	DAMPER AIR CLEANER	1				0.06	0.132
022	10283-11330	NUT WING	1				0.003	0.0066
023	10283-11120	WASHER SPRING	1				0	0
024	10283-11260	RING OIL PAN	1				0.038	0.0836
025	10283-93540	LEBEL INSTRUCTION	1				0.001	0.0022
026	10283-11510	PACKING AIR CLEANER	2				0.001	0.0022
027	02114-50080	NUT	2				0.005	0.011
028	04512-00080	WASHER SPRING	2				0	0
029	01513-50820	STUD	2				0	0
030	15231-11390	WASHER	2				0.008	0.0176

silverhorn.co.uk

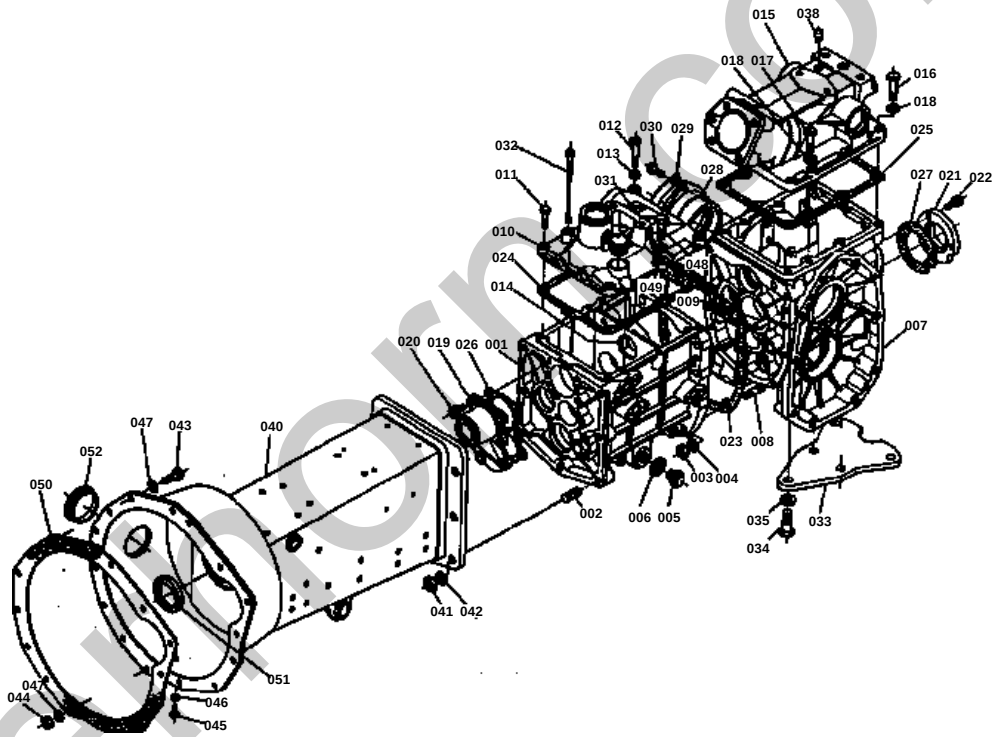

silverthorn.co.uk

↔ Interchangeable; ≠ not interchangeable; ← new for old; → old for new

REF.No	Part No.	Description	Q'ty	S.No.	I/C	REMARKS	Weight (kgf)	Weight (lb)
001	66591-11117	CASE TRANSMISSION	1				0	0
002	01552-51220	STUD	7				0.033	0.0726
003	02117-00100	NUT	9				0	0
004	04512-00100	WASHER SPRING	9				0	0
005	06311-20030	PLUG	1				0	0
006	04717-01700	WASHER SEAL	1				0.003	0.0066
007	66591-11127	CASE DIFF GEAR	1				0	0
008	01552-01035	STUD	9				0	0
009	66611-11160	PIN	2				0.01	0.022
010	66591-11137	COVER CASE FRONT	1				0.948	2.0856
011	01120-00830	BOLT	3				0	0
012	01150-50845	BOLT	1				0.019	0.0418
013	04512-50080	WASHER SPRING	1				0	0
014	05012-00816	PIN	2				0.007	0.0154
015	66591-11146	COVER CASE REAR	1				0	0
016	01153-51040	BOLT	3				0.03	0.066
017	01153-51035	BOLT	6				0.025	0.055
018	04512-50100	WASHER SPRING	9				0	0
019	66591-11172	COVER 1ST SHAFT	1				0	0
020	01120-50822	BOLT	6				0	0
021	66591-11180	COVER 5TH SHAFT	1				0.31	0.682
022	01120-00825	BOLT	3				0	0
023	66591-11212	PACKING	1				0	0
024	66591-11222	PACKING	1				0	0
025	66591-11230	PACKING	1				0	0
026	66905-11250	PACKING	1				0.003	0.0066
027	66591-11260	PACKING	1				0.003	0.0066
028	66591-11313	HOLDER DIFF BEARING	1				0.68	1.496
029	66591-11320	PLATE LOCK	2				0.02	0.044
030	01150-00820	BOLT	4				0	0
031	66591-11450	CAP	1				0.012	0.0264
032	66591-11380	GAUGE OIL	1				0.01	0.022
033	66591-11332	SUPPORT LOWER LINK B	1				0	0
034	01155-51235	BOLT	3				0.039	0.0858
035	04512-50120	WASHER SPRING	3				0	0
036	99999-99999	BLANK	0				0	0
037	99999-99999	BLANK	0				0	0
038	66591-11350	BREATHER	1				0.002	0.0044
039	99999-99999	BLANK	0				0	0
040	66601-51110	HOUSING CLUTCH	1				14	30.8
041	02173-50120	NUT	7				0	0
042	04512-50120	WASHER SPRING	7				0	0
043	01153-50825	BOLT	12				0.012	0.0264
044	02113-50080	NUT	1				0	0
045	06311-25010	PLUG	1				0.014	0.0308
046	04717-01000	WASHER SEAL	1				0.001	0.0022
047	04512-50080	WASHER SPRING	14				0	0
048	01150-01035	BOLT	2				0	0
049	04512-00100	WASHER SPRING	2				0	0
050	66591-51143	PACKING	1				0	0
051	66611-51150	RING FELT 2	1				0.004	0.0088
052	66592-35170	CAP	1				0.029	0.0638

silthorn.co.uk

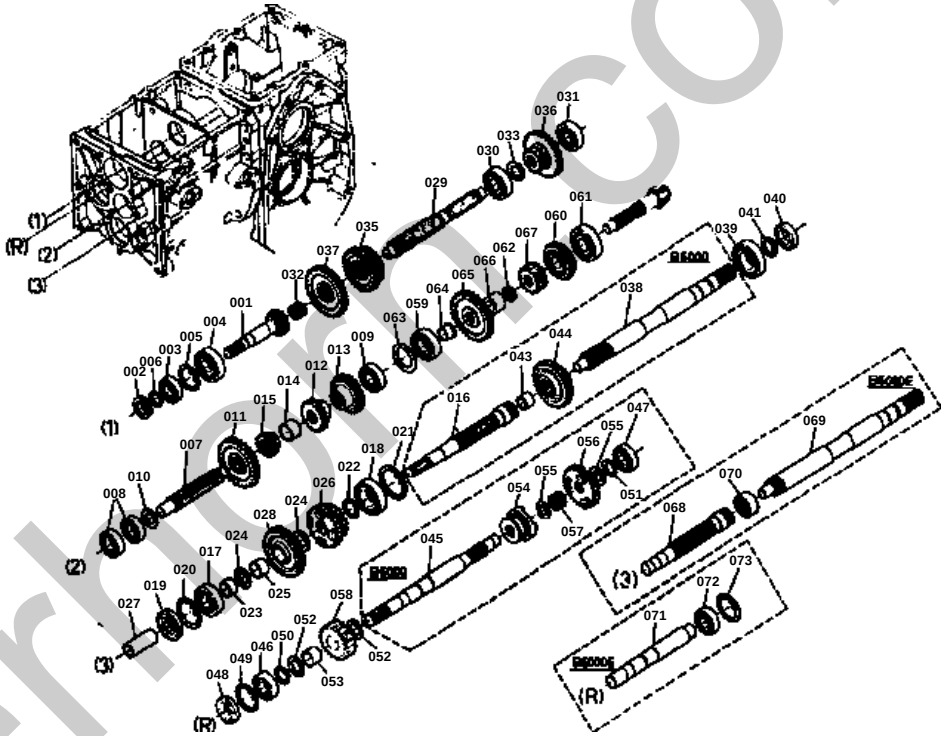

silverhorn.co.uk

↔ Interchangeable; ≠ not interchangeable; ← new for old; → old for new

REF.No	Part No.	Description	Q'ty	S.No.	I/C	REMARKS	Weight (kgf)	Weight (lb)
001	66591-14116	SHAFT 1ST	1				0	0
002	09180-17328	SEAL OIL	1				0	0
003	08101-06203	BEARING BALL	1				0.063	0.1386
004	08101-06304	BEARING BALL	1				0.146	0.3212
005	04611-00400	CIR-CLIP INTERNAL	1				0.005	0.011
006	04612-00170	CIR-CLIP EXTERNAL	1				0.001	0.0022
007	66591-14210	SHAFT 2ND	1				0.36	0.792
008	08101-06203	BEARING BALL	2				0.063	0.1386
009	08101-06302	BEARING BALL	1				0.084	0.1848
010	66591-14220	COLLAR	1				0.008	0.0176
011	66611-14230	GEAR 30	1				0.295	0.649
012	66611-14252	GEAR 15	1				0.2	0.44
013	66611-14260	GEAR 19	1				0.25	0.55
014	66591-14270	COLLAR	1				0.032	0.0704
015	66611-14280	GEAR 13	1				0.092	0.2024
016	66591-14315	SHAFT 3RD	1				0	0
017	08101-06303	BEARING BALL	1				0.112	0.2464
018	08101-06205	BEARING BALL	1				0.14	0.308
019	09500-17478	SEAL OIL	1				0.018	0.0396
020	04611-00470	CIR-CLIP INTERNAL	1				0.006	0.0132
021	04611-00520	CIR-CLIP INTERNAL	1				0.009	0.0198
022	04612-00250	CIR-CLIP EXTERNAL	1				0.002	0.0044
023	66591-14320	COLLAR	1				0.018	0.0396
024	62231-14770	COLLAR THRUST 2	2				0	0
025	66611-14340	BUSH	1				0.01	0.022
026	66611-14350	GEAR 17-21	1				0.42	0.924
027	66591-14370	CAP	1				0.005	0.011
028	66611-14360	GEAR 29	1				0.38	0.836
029	66591-14413	SHAFT 4TH	1				0.49	1.078
030	08101-06204	BEARING BALL	1				0.102	0.2244
031	08101-06302	BEARING BALL	1				0.084	0.1848
032	08821-62013	BEARING NEEDLE	1				0.008	0.0176
033	04612-00200	CIR-CLIP EXTERNAL	1				0.001	0.0022
034	99999-99999	BLANK	0				0	0
035	66611-14442	GEAR 17-21	1				0.37	0.814
036	66591-14450	GEAR 13-28	1				0.31	0.682
037	66611-14460	GEAR 29	1				0.316	0.6952
038	66601-14512	SHAFT 5TH	1				0	0
039	08101-06205	BEARING BALL	1				0.14	0.308
040	09500-25387	SEAL OIL	1				0.008	0.0176
041	04612-00250	CIR-CLIP EXTERNAL	1				0.002	0.0044
042	99999-99999	BLANK	0				0	0
043	66591-14520	BUSH	1				0.006	0.0132
044	66591-14530	GEAR 28	1				0.34	0.748
045	66601-14612	SHAFT REVERSE	1				0	0
046	08101-06004	BEARING BALL	1				0.065	0.143
047	08101-06203	BEARING BALL	1				0.063	0.1386
048	09500-20428	SEAL OIL	1				0.012	0.0264
049	04611-00420	CIR-CLIP INTERNAL	1				0.006	0.0132
050	04612-00220	CIR-CLIP EXTERNAL	1				0.001	0.0022
051	04612-00170	CIR-CLIP EXTERNAL	1				0.001	0.0022
052	62231-14520	COLLAR 1ST SHAFT A	2				0.005	0.011
053	66611-14860	BUSH	1				0.025	0.055
054	66591-14642	CLUTCH FRONT WHEEL D	1				0	0
055	62091-14160	COLLAR 1ST SHAFT A	2				0.002	0.0044
056	66591-14652	GEAR 25	1				0	0
057	08821-72113	BEARING NEEDLE	1				0.008	0.0176
058	66611-14852	GEAR 18-22	1				0.25	0.55
059	08221-07204	BEARING BALL	1				0	0

silbernorn.co.uk

↔ Interchangeable; ≠ not interchangeable; ← new for old; → old for new

REF.No	Part No.	Description	Q'ty	S.No.	I/C	REMARKS	Weight (kgf)	Weight (lb)
060	08151-06304	BEARING BALL	1				0.148	0.3256
061	08101-06304	BEARING BALL	1				0.146	0.3212
062	66591-14770	COLLAR	2				0.003	0.0066
063	66591-14720	COLLAR	1				0.002	0.0044
064	66591-14732	BUSH	1				0	0
065	66591-14740	GEAR 30	1				0.305	0.671
066	66591-14752	COLLAR	1				0.078	0.1716
067	66591-14760	GEAR 15	1				0.15	0.33

silverhorn.co.uk

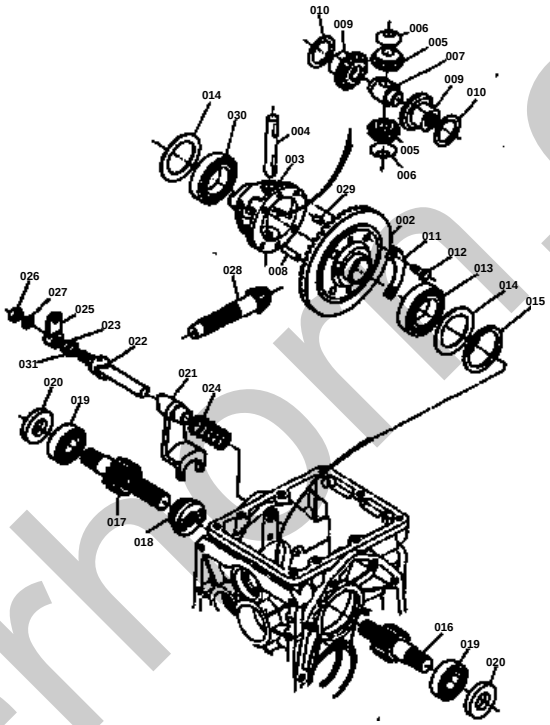

silverhorn.co.uk

↔ Interchangeable; ≠ not interchangeable; ← new for old; → old for new

REF.No	Part No.	Description	Q'ty	S.No.	I/C	REMARKS	Weight (kgf)	Weight (lb)
001	66591-14806	ASSY DIFFERENTIAL	1			002 TO 013 029 030	3.5	7.7
002	66591-14816	GEAR SPIRAL BEVEL 37	1			PART 029 REPLACED AT ONCE	0	0
003	66591-15112	CASE DIFF	1				0	0
004	66591-14833	SHAFT DIFF PINION	1				0.1	0.22
005	66591-14840	GEAR DIFF PINION	2				0.082	0.1804
006	66591-14852	COLLAR THRUST	2				0	0
007	66591-14863	COLLAR THRUST	1				0	0
008	66591-14783	PIN	1				0.01	0.022
009	66591-14873	GEAR DIFF SIDE	2				0	0
010	66591-14882	SHIM 2(T1.0)	1			AS REQUIRED ONE EACH EMPLOYED AT BOTH AI	0	0
010	66591-14892	SHIM 2(T1.2)	1			AS REQUIRED ONE EACH EMPLOYED AT BOTH AI	0	0
011	66591-14910	PLATE LOCK	2				0.006	0.0132
012	01156-00820	BOLT	4				0	0
013	08101-06008	BEARING BALL	1				0.19	0.418
014	66591-14982	SHIM DIFF SIDE 1(T0.	1			AS REQUIRED ONE STANDARD-TYPE PIECE EMPL	0	0
014	66591-14992	SHIM DIFF SIDE 2(T0.	1			AS REQUIRED	0	0
015	04611-00680	CIR-CLIP INTERNAL	1				0.016	0.0352
016	66591-14945	SHAFT DIFF GEAR LH	1				0	0
017	66591-14955	SHAFT DIFF GEAR RH	1				0	0
018	66591-14963	CLUTCH DIFF LOCK	1				0	0
019	08101-06205	BEARING BALL	2				0.14	0.308
020	09500-25478	SEAL OIL	2				0.014	0.0308
021	66591-18273	FORK DIFF LOCK SHIFT	1				0	0
022	66591-18284	COMP FORK-ROD DIFF L	1				0	0
023	04811-10120	O RING	1				0.001	0.0022
024	66591-18320	SPRING	1				0.02	0.044
025	66591-43170	LEVER DIFF LOCK	1				0.041	0.0902
026	02118-50100	NUT	1				0.005	0.011
027	04512-50100	WASHER SPRING	1				0	0
028	66591-14714	PINION SPIRAL BEVEL	1			PART 002 REPLACED AT ONCE	0	0
029	66591-14793	PIN	1				0	0
030	08101-06009	BEARING BALL	1				0.22	0.484
031	66591-18340	SHIM(T0.3)	2				0.001	0.0022

silverhorn.co.uk

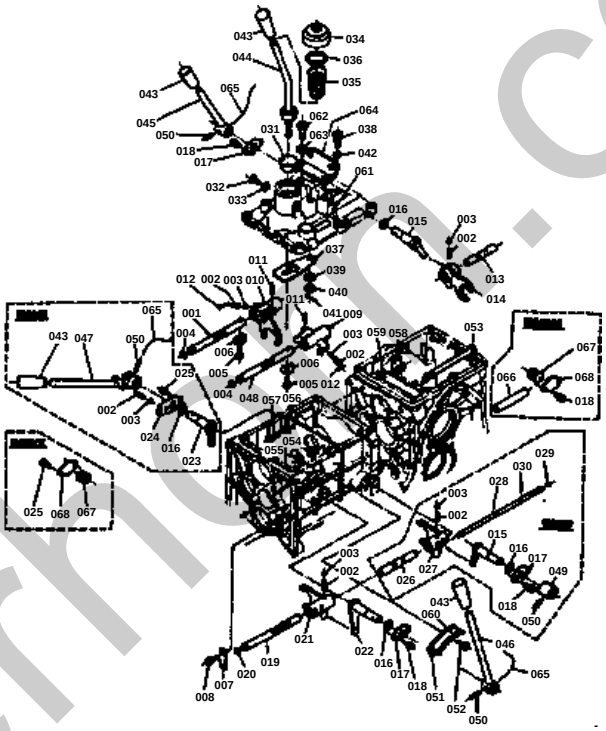

silverhill.co.uk

↔ Interchangeable; ≠ not interchangeable; ← new for old; → old for new

REF.No	Part No.	Description	Q'ty	S.No.	I/C	REMARKS	Weight (kgf)	Weight (lb)
001	66591-18112	SHAFT FORK	1				0	0
002	62061-18260	SPRING	6				0.002	0.0044
003	07715-01605	BALL	6				0.003	0.0066
004	04811-06100	O RING	2				0.001	0.0022
005	01150-00816	BOLT	2				0	0
006	04111-00080	WASHER TONGUED	2				0	0
007	66591-18120	STOPPER	1				0.018	0.0396
008	01020-00616	BOLT	2				0	0
009	66591-18134	FORK SHIFT	1				0	0
010	66591-18145	FORK SHIFT	1				0	0
011	05412-00520	PIN SPRING	2				0	0
012	05511-00322	PIN SPLIT	2				0	0
013	66591-18154	SHAFT FORK	1				0	0
014	66591-18163	FORK SHIFT	1				0	0
015	66591-18172	ARM AUX S-CHANG	2				0	0
016	04811-00160	O RING	4				0.001	0.0022
017	66591-18180	HOLDER FORK ROD 1	3				0.012	0.0264
018	01020-00616	BOLT	6				0	0
019	66611-18610	SHAFT FORK	1				0.16	0.352
020	04811-06100	O RING	1				0.001	0.0022
021	66591-18214	FORK SHIFT	1				0	0
022	66591-18222	ARM ROT.S-CHANGE	1				0	0
023	66591-18233	ARM FRONT DRIVE	1				0	0
024	66591-18240	HOLDER FORK ROD 2	1				0.02	0.044
025	01020-00616	BOLT	2				0	0
026	66591-18252	SHAFT FORK	1				0	0
027	66591-18263	FORK SHIFT	1				0	0
028	66591-18330	ROD CHECK	1				0.09	0.198
029	04811-00050	O RING	1				0.001	0.0022
030	05511-00218	PIN SPLIT	1				0	0
031	66591-18410	BUSH	1				0.004	0.0088
032	66515-18240	PIN ROD GUIDE	2				0.01	0.022
033	04714-00080	PACKING	2				0.001	0.0022
034	66591-18420	COVER	1				0.014	0.0308
035	66591-18430	SPRING	1				0.024	0.0528
036	04611-10380	CIR-CLIP INTERNAL	1				0	0
037	66591-18442	PLATE CHECK	1				0	0
038	66591-18450	BOLT CHECK PLATE	1				0.024	0.0528
039	04014-00100	WASHER PLAIN	1				0	0
040	02372-00100	NUT SLOTTED	1				0	0
041	05511-50218	PIN SPLIT	1				0.001	0.0022
042	04811-10100	O RING	1				0.001	0.0022
043	66591-42111	GRIP LEVER	4				0	0
044	66621-42120	LEVER MAIN S-CHANGE	1				0.29	0.638
045	66591-42132	LEVER AUX S-CHANGE	1				0	0
046	66611-42712	LEVER ROT.S-CHANGE	1				0	0
047	66591-42155	LEVER FRONT DRIVE	1				0	0
048	66611-18110	SHAFT FORK	1				0.15	0.33
049	66591-42160	COLLAR	1				0.04	0.088
050	05412-10622	PIN SPRING	4				0	0
051	66591-42174	GUIDE CHANGE LEVER	1				0	0
052	01120-00816	BOLT	2				0	0
053	01170-01004	BOLT	1				0	0
054	04111-00100	WASHER	1				0	0
055	02117-00100	NUT	1				0	0
056	04111-00800	WASHER	1				0	0
057	01153-00825	BOLT	1				0	0
058	01153-00830	BOLT	1				0	0
059	66591-11440	PLATE	1				0.014	0.0308

silverhorn.co.uk

↔ Interchangeable; ≠ not interchangeable; ← new for old; → old for new

REF.No	Part No.	Description	Q'ty	S.No.	I/C	REMARKS	Weight (kgf)	Weight (lb)
060	66601-48150	LABEL 5	1				0.001	0.0022
061	66601-48222	LABEL 11	1				0	0
062	01150-51025	BOLT	2				0	0
063	04512-00100	WASHER SPRING	2				0	0
064	66591-11433	STAY 3	1				0.107	0.2354
065	99999-99999	WIRE	3				0	0

silverhorn.co.uk

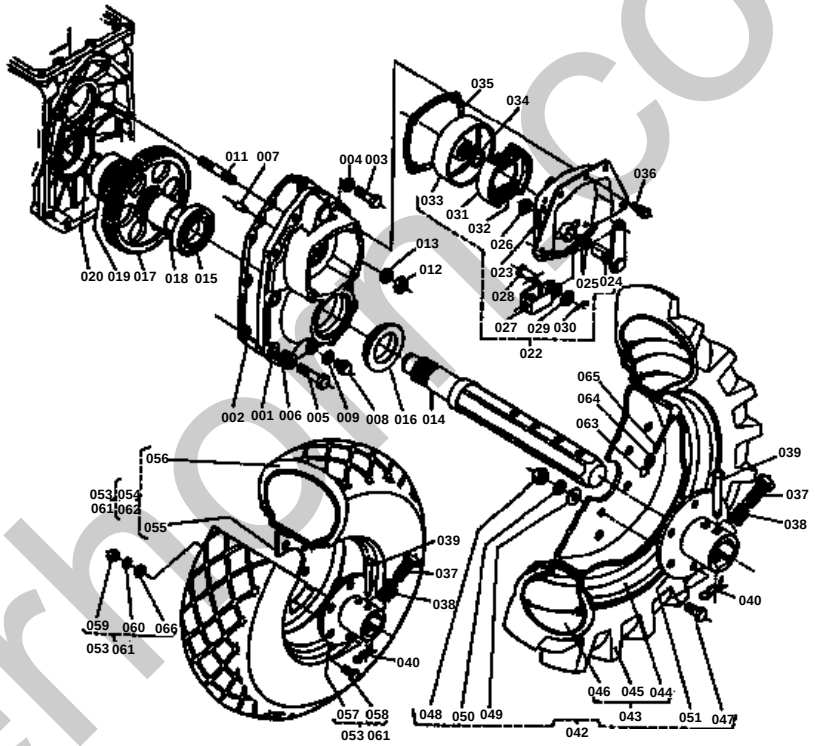

silverhorn.co.uk

↔ Interchangeable; ≠ not interchangeable; ← new for old; → old for new

REF.No	Part No.	Description	Q'ty	S.No.	I/C	REMARKS	Weight (kgf)	Weight (lb)
001	66591-11155	CASE AXLE LH	1				0	0
001	66591-11166	CASE AXLE RH	1				0	0
002	66591-11242	PACKING	2				0	0
003	01153-51035	BOLT	8				0.025	0.055
004	04512-50100	WASHER SPRING	8				0	0
005	01153-51250	BOLT	6				0.05	0.11
006	04512-50120	WASHER SPRING	6				0	0
007	05012-00816	PIN STRAIGHT	4				0.007	0.0154
008	06311-20020	PLUG	2				0	0
009	04717-01320	WASHER SEAL	2				0.002	0.0044
010	99999-99999	BLANK	0				0	0
011	01555-01248	STUD	6				0	0
012	02173-00120	NUT	6				0	0
013	04512-00120	WASHER SPRING	6				0	0
014	66591-17115	AXLE REAR	2				4.47	9.834
015	08101-06208	BEARING BALL	2				0.355	0.781
016	09500-00014	SEAL OIL	2				0.06	0.132
017	66591-17130	GEAR 55	2				1.75	3.85
018	66591-17140	COLLAR	2				0.158	0.3476
019	08101-06306	BEARING BALL	2				0.335	0.737
020	04612-00300	CIR-CLIP EXTERNAL	2				0.003	0.0066
021	66591-22102	ASSY BRAKE	1			038 TO 049	0	0
022	66591-22202	ASSY BRAKE LH	1			039 TO 049	0	0
022	66591-22302	ASSY BRAKE RH	1			039 TO 049	0	0
023	66591-22310	COVER BRAKE LH	1				0.947	2.0834
023	66591-22320	COVER BRAKE RH	1				0.947	2.0834
024	66591-22330	CAM BRAKE LH	1				0.204	0.4488
024	66591-22370	CAM BRAKE RH	1				0.204	0.4488
025	04811-10180	O RING	4				0.001	0.0022
026	04612-00200	CIR-CLIP	2				0.001	0.0022
027	63753-42350	U-JOINT	2				0.038	0.0836
028	05112-50820	PIN JOINT	2				0.009	0.0198
029	04014-50080	WASHER PLAIN	2				0.003	0.0066
030	05511-50215	PIN SPLIT	2				0.001	0.0022
031	66591-22340	SHOE BRAKE	4				0.168	0.3696
032	66591-22350	SPRING	4				0.003	0.0066
033	66591-22360	DRUM BRAKE	2				0.685	1.507
034	04612-10210	CIR-CLIP EXTERNAL	2				0	0
035	66591-22410	PACKING BRAKE	2				0	0
036	01120-50822	BOLT	8				0	0
037	63733-17255	BOLT	2				0	0
038	63512-17234	SPRING	2				0	0
039	66621-17160	PIN AXLE	2				0.05	0.11
040	63733-17280	PIN SNAP	2				0	0
041	96017-23010	ASSY REAR WHEEL 7-16	1			042 TO 051	48	105.6
042	96017-23100	ASSY REAR WHEEL LH	1				7	15.4
042	96017-23200	ASSY REAR WHEEL RH	1				0	0
043	96017-23110	ASSY REAR WHEEL LH	1				0	0
043	96017-23210	ASSY REAR WHEEL RH	1				0	0
044	33500-49030	WHEEL	2				11	24.2
045	96017-23130	TIRE	2				0	0
046	96017-23140	TUBE	2				1.4	3.08
047	01073-51435	BOLT	12				0.063	0.1386
048	02076-50140	NUT	12				0.022	0.0484
049	04014-50140	WASHER PLAIN	12				0.012	0.0264
050	04512-50140	WASHER SPRING	12				0	0
051	66601-17512	HUB WHEEL	2				0	0
052	96016-50122	ASSY REAR WHEEL	1			053 TO 060	45.6	100.32
053	96016-51302	ASSY REAR WHEEL(LH)	1			054 TO 060	0	0

silcrhorn.co.uk

↔ Interchangeable; ≠ not interchangeable; ← new for old; → old for new

REF.No	Part No.	Description	Q'ty	S.No.	I/C	REMARKS	Weight (kgf)	Weight (lb)
054	96016-51310	ASSY REAR WHEEL(LH)	1			55 056	21	46.2
055	96016-51110	WHEEL	2				11	24.2
056	96016-51130	TIRE	2				7.7	16.94
057	66621-17150	HUB WHEEL	2				2.03	4.466
058	01073-51230	BOLT	12				0.041	0.0902
059	02076-50120	NUT	12				0.015	0.033
060	04512-50120	WASHER SPRING	12				0	0
061	96016-51402	ASSY REAR WHEEL(RH)	1			055 TO 060 062	0	0
062	96016-51410	ASSY REAR WHEEL(RH)	1			55 056	21	46.2
063	32270-11690	CAP	2				0	0
064	32270-11650	CORE VALVE	2				0.002	0.0044
065	32150-27700	ASSY VALVE	2				0.001	0.0022
066	04013-50120	WASHER PLAIN	12				0	0

silverhorn.co.uk

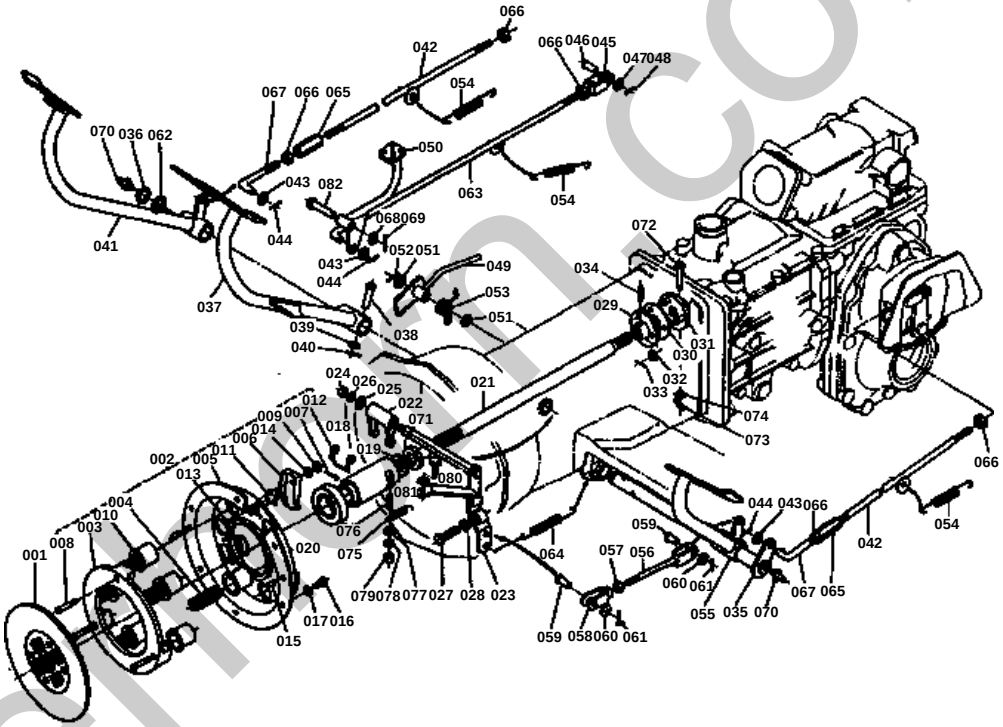

silverhorn.co.uk

↔ Interchangeable; ≠ not interchangeable; ← new for old; → old for new

REF.No	Part No.	Description	Q'ty	S.No.	I/C	REMARKS	Weight (kgf)	Weight (lb)
001	66591-13302	ASSY DISK CLUTCH	1				0	0
002	66591-13402	ASSY PLATE PRESSURE	1			003 TO 014	0	0
003	32130-14510	PLATE PRESSURE	1				0	0
004	66591-13310	SPRING PRESSURE	6				0.058	0.1276
005	32130-14530	COVER CLUTCH	1				0	0
006	32130-14542	LEVER CLUTCH	3				0	0
007	32130-14560	PIN SPLIT	3				0.001	0.0022
008	32130-14570	BOLT	3				0	0
009	32130-14580	NUT	3				0.003	0.0066
010	32130-14590	CAP PRESSURE SPRING	6				0.024	0.0528
011	32130-14620	SEAT LEVER	3				0.017	0.0374
012	32130-14630	SPRING RETURN	3				0.006	0.0132
013	32130-14640	RIVET	6				0.001	0.0022
014	32130-14650	WASHER RELEASE YOKE	3				0.002	0.0044
015	05012-00614	PIN STRAIGHT	2				0.004	0.0088
016	01153-50816	BOLT	6				0.01	0.022
017	04512-50080	WASHER SPRING	6				0	0
018	66621-13313	HOLDER RELEASE BEARI	1				0.61	1.342
019	09030-20328	SEAL OIL	1				0.009	0.0198
020	32150-14820	BEARING THRUST BALL	1				0.2	0.44
021	66591-13244	SHAFT PROPELLER	1				0	0
022	66591-13250	FORK CLUTCH RELEASE	1				0.098	0.2156
023	66601-13310	ROD CLUTCH	1				0.442	0.9724
024	02113-50080	NUT	1				0	0
025	04014-50080	WASHER PLAIN	1				0.003	0.0066
026	04512-50080	WASHER SPRING	1				0	0
027	66711-13320	BOLT	1				0.028	0.0616
028	02116-50100	NUT	1				0.004	0.0088
029	66591-13270	FLANGE	1				0	0
030	66591-13280	RUBBER	1				0.006	0.0132
031	66591-13295	FLANGE PIN	1				0	0
032	02312-50080	NUT SLOTTED	3				0.004	0.0088
033	05511-50218	PIN SPLIT	3				0.001	0.0022
034	05411-00525	PIN SPRING	1				0.002	0.0044
035	66711-42910	SHAFT DRAKE PEDAL	1				1.26	2.772
036	04612-50240	CIR-CLIP EXTERNAL	1				0	0
037	66601-42920	PEDAL BRAKE LH	1				0.92	2.024
038	05112-50840	PIN JOINT	1				0.017	0.0374
039	04012-50080	WASHER PLAIN	1				0.001	0.0022
040	05511-50215	PIN SPLIT	1				0.001	0.0022
041	66711-42930	PEDAL BRAKE RH	1				0.89	1.958
042	66601-42810	ROD BRAKE	2				0.182	0.4004
043	04012-50080	WASHER PLAIN	3				0.001	0.0022
044	05511-50318	PIN SPLIT	3				0.001	0.0022
045	63753-42350	U-JOINT	1				0.038	0.0836
046	05122-50820	PIN JOINT	1				0.009	0.0198
047	04014-50080	WASHER PLAIN	1				0.003	0.0066
048	05511-50215	PIN SPLIT	1				0.001	0.0022
049	66711-42850	LEVER BRAKE LOCK	1				0.116	0.2552
050	66601-42950	PEDAL DIFF LOCK	1				0.318	0.6996
051	04011-50100	WASHER PLAIN	1				0.002	0.0044
052	05511-50320	PIN SPLIT	1				0.002	0.0044
053	66711-42860	SPRING	1				0.005	0.011
054	66591-43190	SPRING	3				0.044	0.0968
055	66711-42120	PEDAL CLUTCH	1				0.926	2.0372
056	66811-43120	ROD	1				0.065	0.143
057	02112-50080	NUT	1				0.003	0.0066
058	66621-43130	U-JOINT	1				0.06	0.132
059	05112-50825	PIN JOINT	2				0.011	0.0242

silverhorn.co.uk

↔ Interchangeable; ≠ not interchangeable; ← new for old; → old for new

REF.No	Part No.	Description	Q'ty	S.No.	I/C	REMARKS	Weight (kgf)	Weight (lb)
060	04012-50080	WASHER PLAIN	2				0.001	0.0022
061	05511-50215	PIN SPLIT	2				0.001	0.0022
062	66591-43232	COLLAR	1				0	0
063	66591-43244	ROD DILL LOCK	1				0.23	0.506
064	66601-42150	SPRING	1				0.02	0.044
065	66591-42413	TURN BUCKLE	2				0	0
066	02112-50080	NUT	5				0.003	0.0066
067	66621-43250	ROD BRAKE FRONT	2				0.024	0.0528
068	04011-50140	WASHER PLAIN	1				0.007	0.0154
069	05511-50325	PIN SPLIT	1				0.002	0.0044
070	06613-10010	NIPPLE GREASE	2				0.006	0.0132
071	09030-20357	SEAL OIL	1				0.009	0.0198
072	66611-14120	PIN JOINT	1				0	0
073	66611-14130	PIN SET	1				0.001	0.0022
074	04717-00500	WASHER	1				0.001	0.0022
075	66611-13342	SPRING	1				0	0
076	01513-50614	STUD	1				0.004	0.0088
077	04013-50060	WASHER PLAIN	1				0	0
078	04512-50060	WASHER SPRING	1				0	0
079	02014-50060	NUT	1				0.003	0.0066
080	01050-50830	BOLT	1				0.016	0.0352
081	02112-50080	NUT	1				0.003	0.0066
082	05122-51445	PIN JOINT	1				0.058	0.1276

silverhorn.co.uk

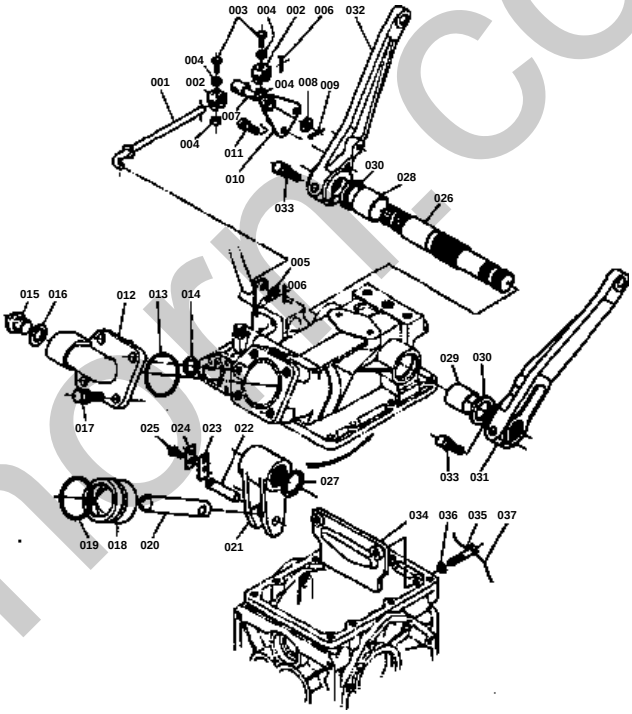

silverhorn.co.uk

OIL PRESSURE GROUP 1

↔ Interchangeable; ≠ not interchangeable; ← new for old; → old for new

REF.No	Part No.	Description	Q'ty	S.No.	I/C	REMARKS	Weight (kgf)	Weight (lb)
001	66591-36513	ROD	1				0	0
002	66611-36322	INTERROCKER	2				0	0
003	01153-50822	BOLT	2				0.011	0.0242
004	02114-50080	NUT	4				0.005	0.011
005	04012-50080	WASHER PLAIN	1				0.001	0.0022
006	05511-50220	PIN SPLIT	2				0.001	0.0022
007	66591-36544	SHAFT	1				0	0
008	04013-50100	WASHER PLAIN	1				0	0
009	05511-50325	PIN SPLIT	1				0.002	0.0044
010	66591-36554	HOLDER	1				0	0
011	01120-50825	BOLT	2				0	0
012	66591-36612	CAP CYLINDER	1				0	0
013	04811-50550	O RING	1				0.002	0.0044
014	04811-00080	O RING	1				0.001	0.0022
015	06311-25040	PLUG	1				0.09	0.198
016	04714-00400	PACKING	1				0.003	0.0066
017	01153-51240	BOLT	2				0.042	0.0924
018	66591-36632	PISTON OIL PRESSURE	1				0	0
019	04810-08500	O RING	1				0.005	0.011
020	66591-36642	ROD OIL PRESSURE PIS	1				0	0
021	66591-36655	ARM OIL PRESSURE	1				0	0
022	66591-36660	PIN ARM	1				0.045	0.099
023	66591-36670	PLATE LOCK	1				0.01	0.022
024	66591-36680	WASHER LOCK	1				0.002	0.0044
025	01050-00612	BOLT	2				0	0
026	66591-36693	SHAFT OIL PRESSURE A	1				0	0
027	04612-00320	CIR-CLIP EXTERNAL	1				0.004	0.0088
028	66591-36710	BUSH	1				0.049	0.1078
029	66591-36720	BUSH	1				0.044	0.0968
030	09230-28405	SEAL OIL	2				0.006	0.0132
031	66591-36733	ARM	1				0	0
032	66591-36743	ARM	1				1.05	2.31
033	01123-01045	BOLT	2				0	0
034	66591-36750	PLATE	1				0.458	1.0076
035	63743-11412	BOLT	2				0	0
036	04714-00080	PACKING	2				0.001	0.0022
037	99999-99999	WIRE	1				0	0

silverhorn.co.uk

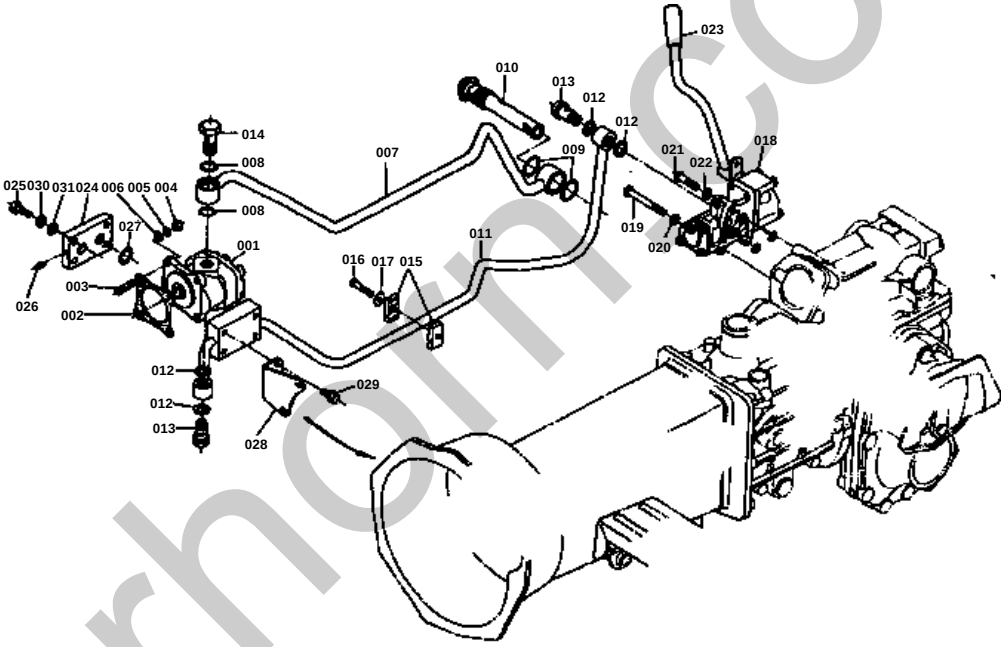

silverhorn.co.uk

OIL PRESSURE GROUP 2

↔ Interchangeable; ≠ not interchangeable; ← new for old; → old for new

REF.No	Part No.	Description	Q'ty	S.No.	I/C	REMARKS	Weight (kgf)	Weight (lb)
001	66591-36100	ASSY PUMP OIL PRESSU	1				0	0
002	15231-87132	PACKING OIL PRESSURE	1				0	0
003	01513-50822	STUD	4				0.01	0.022
004	02156-50080	NUT	4				0.004	0.0088
005	04512-50080	WASHER SPRING	4				0	0
006	04012-50080	WASHER PLAIN	4				0.001	0.0022
007	66591-36215	PIPE	1				0	0
008	04811-00220	O RING	2				0.001	0.0022
009	04811-10300	O RING	2				0.001	0.0022
010	66591-36226	FILTER OIL	1				0	0
011	66601-36130	PIPE	1				1.2	2.64
012	04714-00300	PACKING	4				0.002	0.0044
013	66591-36253	JOINT EYE	2				0	0
014	32170-38172	JOINT EYE	1				0	0
015	66591-36242	HOLDER PIPE	2				0	0
016	01050-50640	BOLT	1				0	0
017	04015-250060	WASHER PLAIN	1				0	0
018	66571-36303	ASSY VALVE CONTROL	1				0	0
019	01150-00875	BOLT	2				0	0
020	04512-00080	WASHER SPRING	2				0	0
021	01150-50845	BOLT	1				0.019	0.0418
022	04512-50080	WASHER SPRING	1				0	0
023	66591-42110	GRIP LEVER	1				0.02	0.044
024	66604-36160	COVER	1				0.23	0.506
025	01150-50838	BOLT	4				0.017	0.0374
026	06312-10020	PLUG	1				0.015	0.033
027	04811-00200	O RING	2				0.001	0.0022
028	66601-36150	HOLDER	1				0.118	0.2596
029	01120-50814	BOLT	2				0	0
030	04512-50080	WASHER SPRING	4				0	0
031	04013-50080	WASHER PLAIN	4				0	0

silverhorn.co.uk

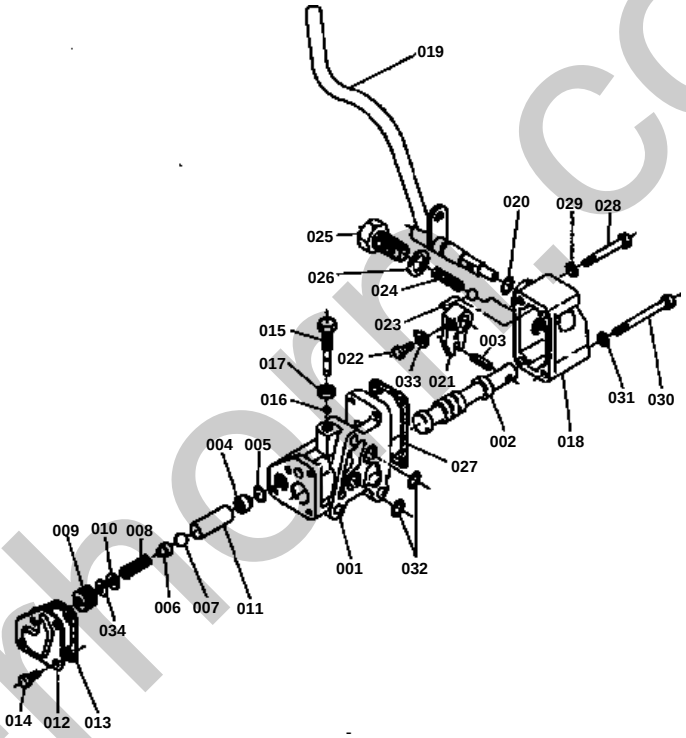

silverhorse.co.uk

↔ Interchangeable; ≠ not interchangeable; ← new for old; → old for new

REF.No	Part No.	Description	Q'ty	S.No.	I/C	REMARKS	Weight (kgf)	Weight (lb)
001	66591-36317	BODY VALVE	1				0	0
002	66591-36320	SPOOL	1				0	0
003	05412-00620	PIN SPRING	1				0	0
004	66591-36333	HOLDER	1				0	0
005	04811-15120	O RING	1				0.001	0.0022
006	66611-36222	HOLDER SPRING	1				0.008	0.0176
007	07715-03211	BALL	1				0.003	0.0066
008	66591-36350	SPRING	1				0.01	0.022
009	66591-36363	SCREW ADJUSTING	1				0	0
010	04012-00060	WASHER PLAIN	1			AS REQUIRED	0	0
011	66591-36370	COLLAR	1				0.016	0.0352
012	66591-36380	CAP	1				0.067	0.1474
013	66591-36390	PACKING	1				0	0
014	01020-00616	BOLT	4				0	0
015	66591-36415	BOLT ADJUSTING	1				0	0
016	04811-10040	O RING	1				0.001	0.0022
017	02012-50100	NUT	1				0.009	0.0198
018	66591-36433	COVER VALVE	1				0	0
019	66571-36442	LEVER CONTROL	1				0	0
020	04811-00100	O RING	1				0.001	0.0022
021	66591-36452	ARM VALVE GUIDE	1				0	0
022	66591-36480	BOLT	1				0.004	0.0088
023	07715-00803	BALL	1				0.004	0.0088
024	62061-18277	SPRING	1				0	0
025	66591-36462	BOLT	1				0	0
026	04714-00300	PACKING	1				0.002	0.0044
027	66591-36470	PACKING VALVE COVER	1				0	0
028	01050-50650	BOLT	2				0.012	0.0264
029	04512-50060	WASHER SPRING	2				0	0
030	01050-00665	BOLT	2				0	0
031	04512-00060	WASHER SPRING	2				0	0
032	04811-06120	O RING	2				0.001	0.0022
033	04111-00080	WASHER	1				0	0
034	66611-36330	SHIM	1				0.001	0.0022

silverhorn.co.uk

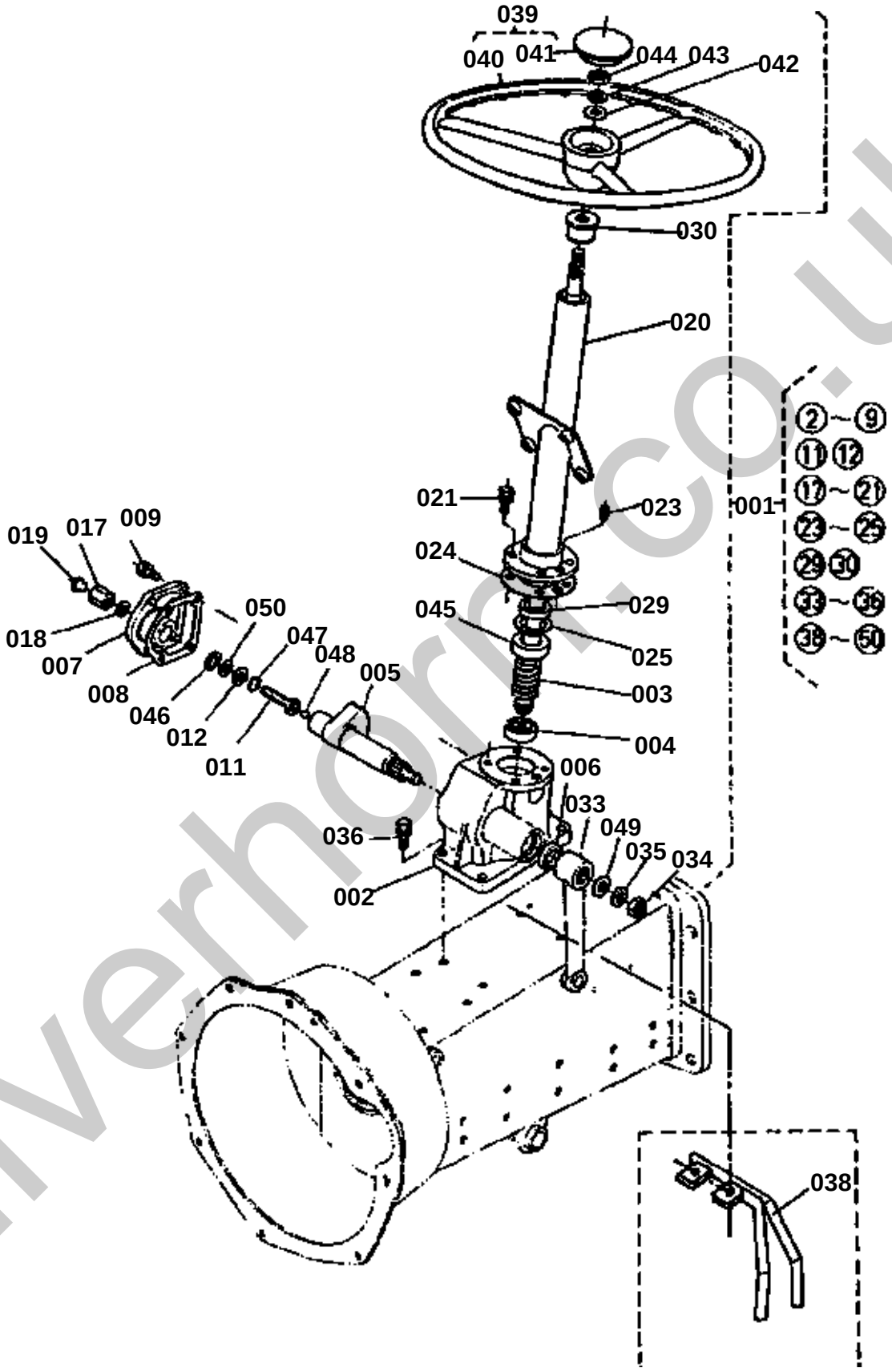

silverhorn.co.uk

↔ Interchangeable; ≠ not interchangeable; ← new for old; → old for new

REF.No	Part No.	Description	Q'ty	S.No.	I/C	REMARKS	Weight (kgf)	Weight (lb)
001	66591-41102	ASSY STEERING	1				0	0
002	66591-411134	CASE STEERING GEAR	1				0	0
003	66591-41126	SHAFT STEERING	1				0	0
004	66591-41130	BEARING BALL 1	1				0.046	0.1012
005	66591-41157	SHAFT SECTOR	1				0.65	1.43
006	09500-24358	SEAL OIL	1				0.006	0.0132
007	66591-41210	COVER SIDE	1				0.38	0.836
008	66591-41220	GASKET	1				0.002	0.0044
009	01120-50820	BOLT	4				0	0
011	66591-41160	SCREW ADJUSTING	1				0.028	0.0616
012	66591-41180	COLLAR ADJUSTING 1	1				0.003	0.0066
017	66591-41172	NUT ADJUSTING SCREW	1				0	0
018	04714-00100	GASKET	1				0.002	0.0044
019	61011-18142	PLUG	1				0	0
020	66591-41234	POST STEERING	1				0	0
021	01120-50818	BOLT	2				0	0
023	06312-10010	PLUG	1				0.007	0.0154
024	66591-41240	GASKET	1				0.004	0.0088
025	66591-41260	SHIM 2	1				0.001	0.0022
029	09500-17328	SEAL OIL	1				0.008	0.0176
030	66591-41253	BUSH POST	1				0	0
033	66591-41273	ARM PITMAN	1				0	0
034	02174-50120	NUT	1				0.01	0.022
035	04512-50120	WASHER SPRING	1				0	0
036	01120-50825	BOLT	4	<=63002			0	0
036	01120-50825	BOLT	2	>=63003		REAR	0	0
036	01120-50830	BOLT	2	>=63003		FRONT	0	0
038	66601-52160	GUARD FRONT	1	>=63003			0.5	1.1
039	66591-41300	ASSY WHEEL STEERING	1				0	0
040	99999-99999	WHEEL STEERING	1			ORDER BY REF.No.039	0	0
041	32150-16822	CAP STEERING WHEEL	1				0	0
042	04014-50120	WASHER PLAIN	1				0.007	0.0154
043	04512-50120	WASHER SPRING	1				0	0
044	02172-50120	NUT	1				0.01	0.022
045	66591-41140	BEARING BALL 2	1				0.06	0.132
046	04611-00190	CIR-CLIP INTERNAL	1				0.001	0.0022
047	07715-03203	BALL	20				0.001	0.0022
048	07715-01605	BALL	1				0.003	0.0066
049	04014-50120	WASHER PLAIN	1				0.007	0.0154
050	66591-41190	SHIM 1	1				0.001	0.0022

silvermorn.co.uk

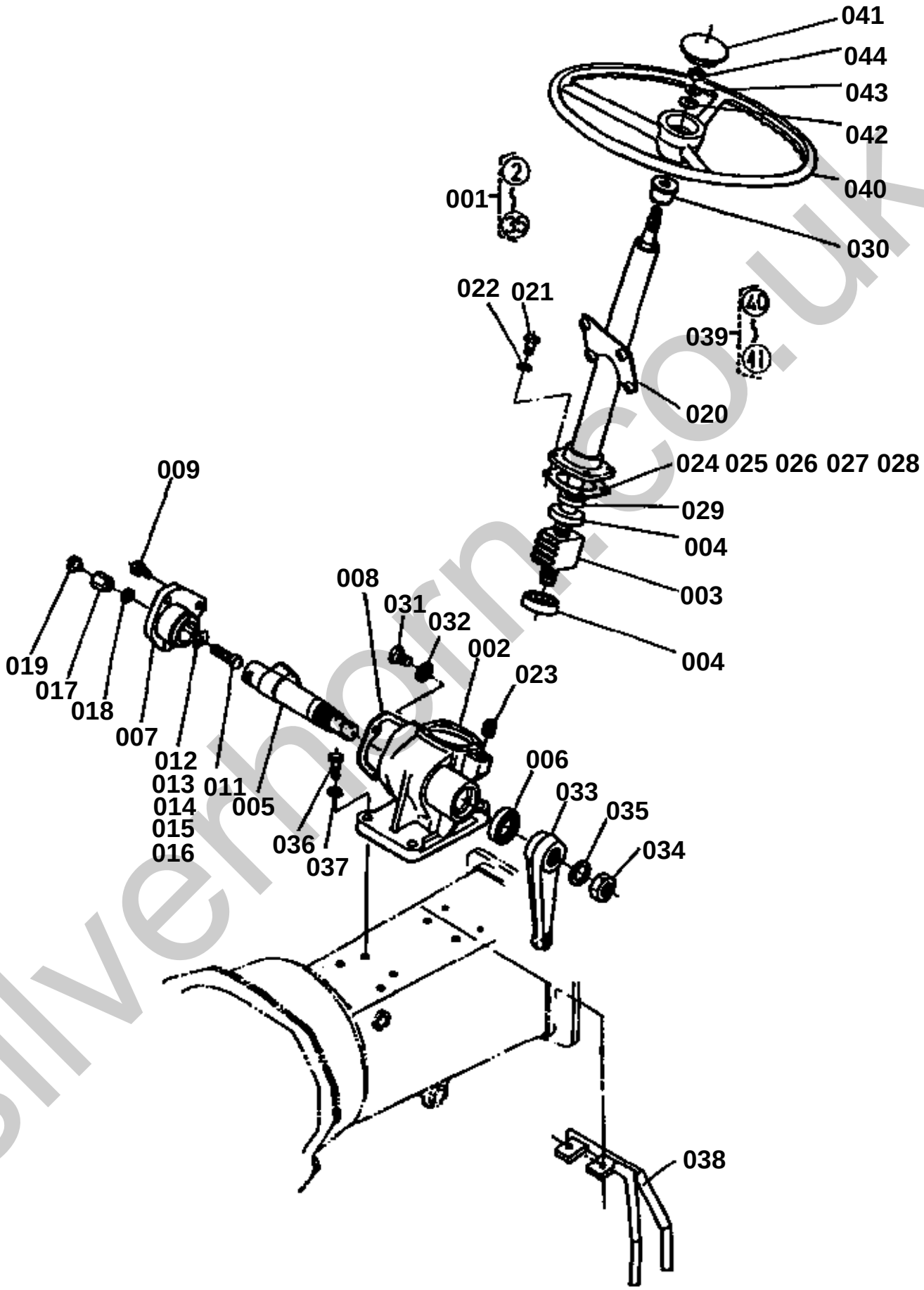

silverhorn.co.uk

↔ Interchangeable; ≠ not interchangeable; ← new for old; → old for new

REF.No	Part No.	Description	Q'ty	S.No.	I/C	REMARKS	Weight (kgf)	Weight (lb)
001	66601-41010	ASSY STEERING	1			002 TO 035	7	15.4
002	66811-41112	CASE STEERING GEAR	1				0	0
003	66811-41200	ASSY NUT BALL	1				1.11	2.442
004	66811-41140	BEARING THRUST BALL	2				0.045	0.099
005	66811-41150	SHAFT SECTOR	1				0.52	1.144
006	09500-22358	SEAL OIL	1				0.01	0.022
007	66811-41160	COVER SIDE	1				0.3	0.66
008	66811-41170	GASKET	1				0	0
009	01120-50822	BOLT	3				0	0
010	99999-99999	BLANK	0				0	0
011	66811-41180	SCREW ADJUSTING	1				0.013	0.0286
012	66811-41190	COLLAR ADJUSTING 1	1				0.002	0.0044
013	66811-41210	COLLAR ADJUSTING 2	1				0.001	0.0022
014	66811-41220	COLLAR ADJUSTING 3	1				0.001	0.0022
015	66811-41230	COLLAR ADJUSTING 4	1				0.001	0.0022
016	66811-41240	COLLAR ADJUSTING 5	1				0.001	0.0022
017	66811-41250	NUT	1				0.027	0.0594
018	04714-00080	GASKET	1				0.001	0.0022
019	61011-18142	PLUG	1				0	0
020	66601-41120	POST STEERING	1				1.135	2.497
021	01153-50820	BOLT	4				0.012	0.0264
022	04512-50080	WASHER SPRING	4				0	0
023	34150-16640	PLUG	1				0.015	0.033
024	66811-41320	SHIM 1	1				0.001	0.0022
025	66811-41330	SHIM 2	1				0	0
026	66811-41340	SHIM 3	1				0.001	0.0022
027	66811-41350	SHIM 4	1				0.001	0.0022
028	66811-41360	SHIM 5	1				0.003	0.0066
029	09500-16287	SEAL OIL	1				0.01	0.022
030	66591-41253	BUSH POST	1				0	0
031	06331-35010	PLUG	1				0.012	0.0264
032	04717-01000	WASHER SEAL	1				0.001	0.0022
033	66811-41410	ARM PITMAN	1				0.38	0.836
034	02172-50160	NUT	1				0.017	0.0374
035	04512-50160	WASHER SPRING	1				0	0
036	01153-50828	BOLT	2			REAR	0.014	0.0308
036	01153-50830	BOLT	2			FRONT	0	0
037	04512-50080	WASHER SPRING	4				0	0
038	66601-52160	GUARD FRONT	1				0.5	1.1
039	66611-41400	ASSY WHEEL STEERING	1				0	0
040	99999-99999	WHEEL STEERING	1			ORDER BY REF.No.039	0	0
041	66611-41420	CAP STEERING WHEEL	1				0.026	0.0572
042	04013-50120	WASHER PLAIN	1				0	0
043	04512-50120	WASHER SPRING	1				0	0
044	02172-50120	NUT	1				0.01	0.022

silverhorn.co.uk

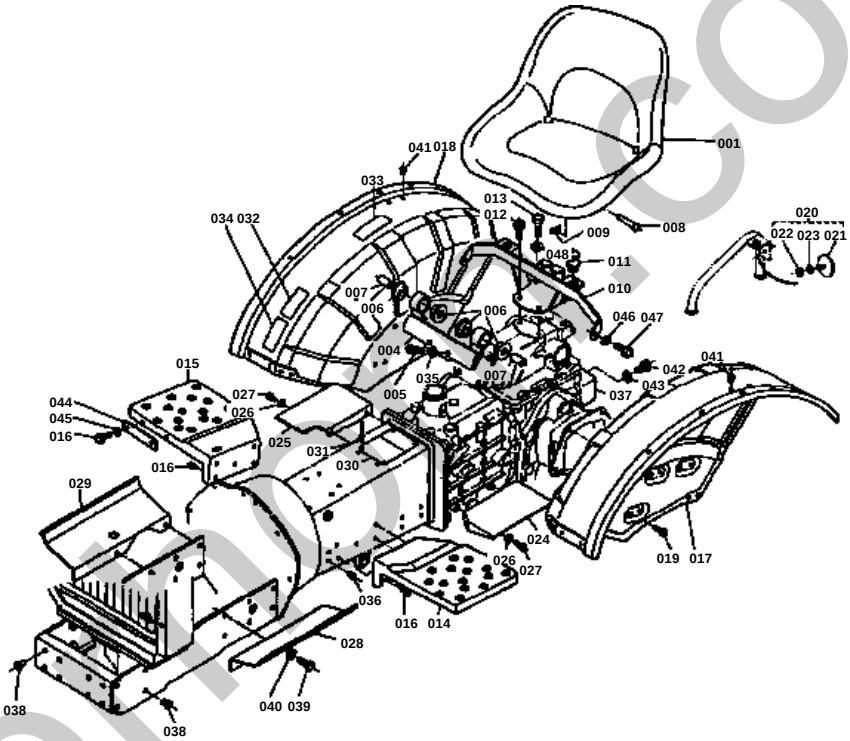

silvermo.co.uk

↔ Interchangeable; ≠ not interchangeable; ← new for old; → old for new

REF.No	Part No.	Description	Q'ty	S.No.	I/C	REMARKS	Weight (kgf)	Weight (lb)
001	66711-45902	ASSY SEAT	1				0	0
002	99999-99999	BLANK	0				0	0
003	99999-99999	BLANK	0				0	0
004	66601-45930	SUPPORT SEAT FRONT	1				0.628	1.3816
005	66711-36440	BOLT	2				0.045	0.099
006	66591-41540	CUSHION	4				0.01	0.022
007	66591-41552	COLLAR	2				0	0
008	05112-51045	PIN	2				0.029	0.0638
009	05516-51000	PIN SNAP	2				0	0
010	66601-45942	SUPPORT SEAT REAR	1				0	0
011	32240-18442	CUSHION	2				0	0
012	01120-50820	BOLT	2				0	0
013	01155-51235	BOLT	2				0.039	0.0858
014	66711-51130	STEP LH	1				2.078	4.5716
015	66711-51140	STEP RH	1				1.948	4.2856
016	01120-50818	BOLT	8				0	0
017	66711-52710	FENDER LH	1				6.3	13.86
018	66711-52720	FENDER RH	1				6.2	13.64
019	01120-50816	BOLT	8				0	0
020	66591-52300	ASSY LAMP	2			021 TO 023	0.006	0.0132
021	53143-61240	COMP LAMP	2				0.009	0.0198
022	02013-50050	NUT	2				0.001	0.0022
023	04512-50050	WASHER SPRING	2				0	0
024	66591-52230	COVER LH	1				0.21	0.462
025	66591-52242	COVER RH	1				0	0
026	04014-50080	WASHER PLAIN	4				0.003	0.0066
027	01120-50816	BOLT	4				0	0
028	66591-52254	COVER LH	1				0	0
029	66591-52264	COVER RH	1				0	0
030	66601-48522	LABEL 2	1				0	0
031	54102-24410	RIVET	4				0.001	0.0022
032	66601-48140	LABEL 4	1				0.001	0.0022
033	66601-48160	LABEL 6	1				0.001	0.0022
034	66601-48170	LABEL 7	1				0.001	0.0022
035	04512-50120	WASHER SPRING	2				0	0
036	66591-51132	PLUG 1	16				0	0
037	66601-14540	COVER P.T.O	2				0.75	1.65
038	66591-54390	PLUG 3	16				0.001	0.0022
039	66591-54232	BOLT REAMER	4				0	0
040	04512-50120	WASHER SPRING	4				0	0
041	63763-52581	PLUG	4				0	0
042	01150-51225	BOLT	2				0.033	0.0726
043	04512-50120	WASHER SPRING	2				0	0
044	66711-51180	PLATE	1				0.045	0.099
045	04013-50080	WASHER PLAIN	2				0	0
046	04013-50080	WASHER PLAIN	2				0	0
047	01150-50816	BOLT	2				0.01	0.022
048	04512-50120	WASHER SPRING	2				0	0

silverhorn.co.uk

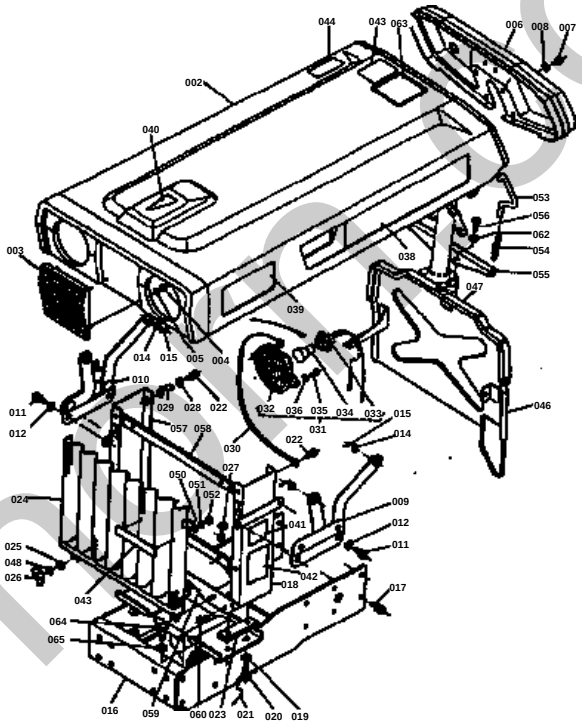

silverhallo.uk

↔ Interchangeable; ≠ not interchangeable; ← new for old; → old for new

REF.No	Part No.	Description	Q'ty	S.No.	I/C	REMARKS	Weight (kgf)	Weight (lb)
001	66591-54102	ASSY BONNET	1			002 TO 005 009 TO 015 031	0	0
002	66571-54117	BONNET	1				0	0
003	66571-54120	MASCOT	1				0	0
004	02014-50060	NUT	4				0.003	0.0066
005	04512-50060	WASHER SPRING	4				0	0
006	66571-54130	PANEL	1				0.88	1.936
007	01120-50818	BOLT	4				0	0
008	04014-50080	WASHER PLAIN	4				0.003	0.0066
009	66591-54704	COMP FULCRUM BONNET	1				0	0
010	66591-54804	COMP FULCRUM BONNET	1				0	0
011	01120-50818	BOLT	4				0	0
012	04014-50080	WASHER PLAIN	4				0.003	0.0066
013	99999-99999	BLANK	0				0	0
014	04014-50080	WASHER PLAIN	4				0.003	0.0066
015	05511-50215	PIN SPLIT	4				0.001	0.0022
016	66641-51260	SUPPORT FRONT WHEEL	1				9.1	20.02
017	01130-51022	BOLT	8				0	0
018	66641-51225	SUPPORT RADIATOR	1				0	0
019	04014-50080	WASHER PLAIN	4				0.003	0.0066
020	66611-51270	BOLT	4				0.012	0.0264
021	99999-99999	WIRE	2				0	0
022	01120-50816	BOLT	8				0	0
023	66591-54330	CUSHION 1	2				0.032	0.0704
024	66641-51283	NET RADIATOR	1				0	0
025	04014-50060	WASHER PLAIN	2				0.001	0.0022
026	61041-63150	NUT	2				0.004	0.0088
027	66591-54353	REATINER PIPE	1				0	0
028	04014-50100	WASHER PLAIN	1				0.004	0.0088
029	15221-05590	RETAINER PIPE	2				0.01	0.022
030	66591-55640	CORD LAMP EARTH	1				0.015	0.033
031	66591-55604	ASSY LAMP HEAD	2			032 TO 034	0	0
032	66591-55613	LAMP HEAD	2				0	0
033	66591-55622	SOCKET	2				0	0
034	66591-55630	BULB LAMP	2				0.008	0.0176
035	01202-50612	BOLT	4				0.005	0.011
036	04014-50060	WASHER PLAIN	4				0.001	0.0022
037	99999-99999	BLANK	0				0	0
038	66591-47110	LABEL 1	2				0.005	0.011
039	66601-48180	LABEL 8	2				0.002	0.0044
040	66591-47190	LABEL 9	1				0.001	0.0022
041	15101-94612	LABEL RADIATOR	1				0	0
042	15103-94590	LABEL	1				0.001	0.0022
043	66601-48260	LABEL	1				0.001	0.0022
044	66601-48582	LABEL 2	1				0	0
045	13313-69750	ASSY CRAMP CORD	1			NOT SHOWN IN FIG.	0	0
046	66571-54682	COVER	1				0	0
047	66591-54692	TAPE	1				0	0
048	04512-50060	WASHER SPRING	1				0	0
049	66601-47230	LABEL	1				0.02	0.044
050	04013-50040	WASHER	2				0	0
051	04512-50040	WASHER SPRING	2				0	0
052	02054-50040	NUT	2				0.001	0.0022
053	66601-55210	HOOK BONNET	2				0.024	0.0528
054	66711-55220	SPRING	2				0.01	0.022
055	66711-41132	HOLDER	1				0	0
056	01153-50825	BOLT	4				0.012	0.0264
057	66641-51234	SUPPORT RADIATOR RH	1				0	0
058	66641-51240	STAY SUPPORT	2				0.144	0.3168
059	66641-51250	PLATE SUPPORT	1				0.16	0.352

silverhorn.co.uk

↔ Interchangeable; ≠ not interchangeable; ← new for old; → old for new

REF.No	Part No.	Description	Q'ty	S.No.	I/C	REMARKS	Weight (kgf)	Weight (lb)
060	01202-50612	BOLT	4				0.005	0.011
061	99999-99999	BLANK	0				0	0
062	04512-50080	WASHER SPRING	4				0	0
063	66601-48620	LABEL	1				0.002	0.0044
064	01173-51020	BOLT	1				0.017	0.0374
065	04512-50100	WASHER SPRING	1				0	0

silverhorn.co.uk

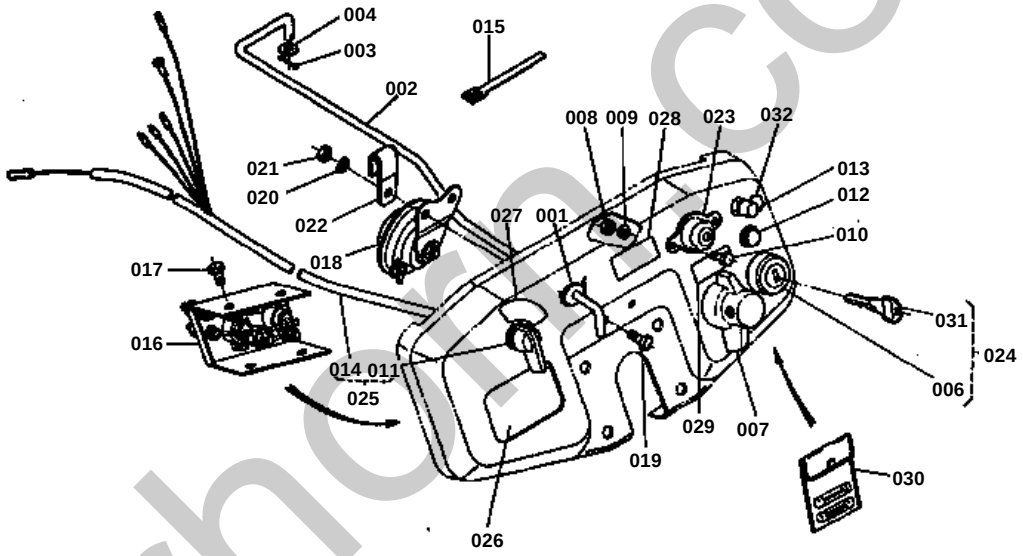

silverhorn.co.uk

↔ Interchangeable; ≠ not interchangeable; ← new for old; → old for new

REF.No	Part No.	Description	Q'ty	S.No.	I/C	REMARKS	Weight (kgf)	Weight (lb)
001	66591-54580	RUBBER RELEASE ROD	1				0.003	0.0066
002	66571-54610	ROD	1				0.122	0.2684
003	05511-51612	PIN SPLIT	1				0.001	0.0022
004	04014-50060	WASHER PLAIN	1				0.001	0.0022
005	66591-54200	ASSY PANEL	1				0	0
006	66591-55514	KEY MAIN SWITCH	1				0	0
007	66621-55130	SWITCH STARTER	1				0.227	0.4994
008	02053-50050	NUT	2				0.001	0.0022
009	04512-50050	WASHER SPRING	2				0	0
010	01050-50512	BOLT	2				0.003	0.0066
011	66591-55150	SWITCH	1				0.07	0.154
012	66591-55163	LAMP	1				0	0
013	32150-32242	SWITCH HORN	1				0	0
014	66591-55216	WIRE HARNESS	1				0	0
015	14301-69290	HOLDER	3				0.001	0.0022
016	32130-32802	ASSY RECTIFIER	1				0	0
017	01020-50612	BOLT	2				0.005	0.011
018	66591-55300	ASSY HORN	1				0.15	0.33
019	01050-50612	BOLT	2				0.005	0.011
020	04512-50060	WASHER SPRIANG	2				0	0
021	02013-50060	NUT	2				0	0
022	13313-69750	ASSY CRAMP CORD	1				0	0
023	15231-65954	LAMP	1				0	0
024	66591-55503	ASSY KEY MAIN SWITCH	1				0	0
025	66601-55603	ASSY WIRE HARNESS	1			11 014	0.317	0.6974
026	66591-47130	LABEL 3	1				0.001	0.0022
027	66601-48210	LABEL 10	1				0.001	0.0022
028	66601-48290	LABEL	1				0.002	0.0044
029	66601-48250	LABEL 1	1				0.001	0.0022
030	66591-55522	ASSY FUSE	1				0	0
031	66591-61122	KEY	1				0	0

silverhorn.co.uk

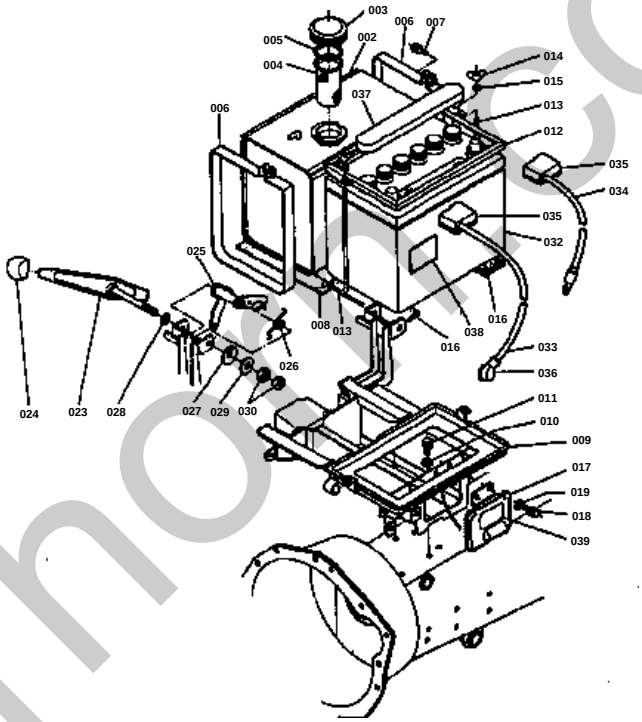

silverhorse.co.uk

↔ Interchangeable; ≠ not interchangeable; ← new for old; → old for new

REF.No	Part No.	Description	Q'ty	S.No.	I/C	REMARKS	Weight (kgf)	Weight (lb)
001	66571-54300	ASSY TANK FUEL	1			002 TO 005	3	6.6
002	66571-54410	TANK FUEL	1				2.2	4.84
003	66591-54400	ASSY CAP FUEL TANK	1				0.067	0.1474
004	14123-41354	FILTER FUEL TANK	1				0	0
005	10211-41342	PACKING	1				0	0
006	66571-54445	BAND FUEL TANK	2				0	0
007	01120-50830	BOLT	2				0	0
008	66571-54462	COSHION	2				0	0
009	66601-54770	SUPPORT	1				4	8.8
010	04014-50080	WASHE PLAIN	4				0.003	0.0066
011	01120-50818	BOLT	4				0	0
012	66571-54482	RETAINER BATTERY	1				0	0
013	66571-54490	BOLT HOOK	2				0.049	0.1078
014	66621-55440	NUT	2				0.006	0.0132
015	04512-50060	WASHER SPRING	2				0	0
016	66571-54512	CUSHION BATTERY	2				0	0
017	66571-54522	CAP	1				0	0
018	01020-50612	BOLT	2				0.005	0.011
019	04013-50060	WASHER PLAIN	2				0	0
020	99999-99999	BLANK	0				0	0
021	99999-99999	BLANK	0				0	0
022	99999-99999	BLANK	0				0	0
023	66711-43310	LEVER RELEASE	1				0.22	0.484
024	66611-43240	GRIP LEVER	1				0.018	0.0396
025	66711-43322	ARM RELEASE	1				0	0
026	66711-43330	SPRING	1				0.01	0.022
027	32210-17190	SPRING	1				0.005	0.011
028	04011-50100	WASHER PLAIN	1				0.002	0.0044
029	04015-50100	WASHER PLAIN	1				0.016	0.0352
030	02116-50100	NUT	2				0.004	0.0088
031	99999-99999	BLANK	0				0	0
032	66571-55110	BATTERY	1				0	0
033	66571-55122	CORD BATTERY	1				0	0
034	66571-55130	CORD EARTH	1				0.11	0.242
035	66571-55170	CAP	2				0	0
036	66591-55192	CAP STARTER	1				0	0
037	66571-55230	COVER BATTERY	1				0.087	0.1914
038	15232-88230	LABEL	1				0.002	0.0044
039	66591-47270	LABEL	1				0.001	0.0022

silvermorn.co.uk

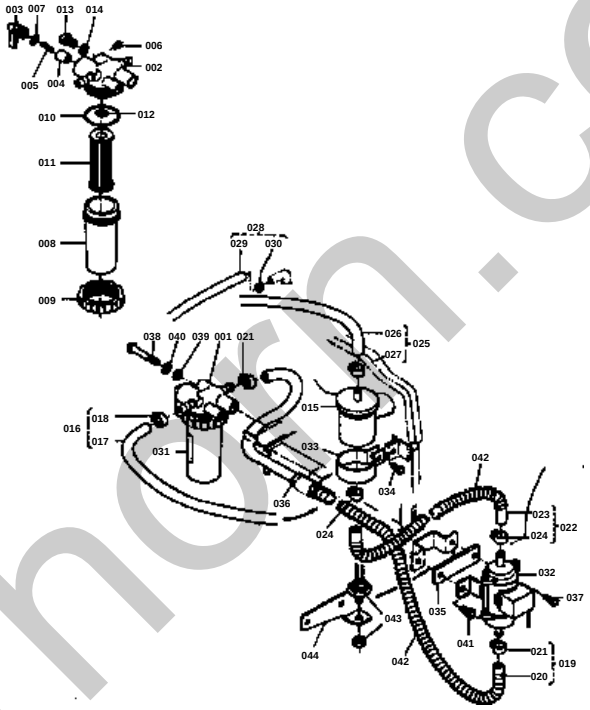

silverhorn.co.uk

FUEL FILTER GROUP

↔ Interchangeable; ≠ not interchangeable; ← new for old; → old for new

REF.No	Part No.	Description	Q'ty	S.No.	I/C	REMARKS	Weight (kgf)	Weight (lb)
001	15231-43014	ASSY FILTER FUEL	1			002 TO 014	0	0
002	15231-43513	BODY	1				0	0
003	15231-43520	LEVER	1				0	0
004	15231-43810	VALVE	1				0.002	0.0044
005	14301-43820	SPRING VALVE	1				0.001	0.0022
006	14301-43830	SCREW	1				0.001	0.0022
007	14301-43840	O RING LEVER	1				0.001	0.0022
008	15231-43580	CAP FILTER	1				0	0
009	14301-43590	RING	1				0.054	0.1188
010	14301-43650	O RING	1				0.001	0.0022
011	15231-43562	ASSY ELEMENT	1				0	0
012	14301-43570	O RING	1				0.001	0.0022
013	15231-43282	PLUG	2				0.004	0.0088
014	14301-43290	PACKING	2				0.001	0.0022
015	13351-43010	ASSY FILTER FUEL 2	1				0	0
016	15232-42010	ASSY PIPE FUEL 1	1			17 018	0.064	0.1408
017	15232-42170	PIPE FUEL 1	1				0	0
018	14301-42753	CLIP PIPE	2				0	0
019	15231-42022	ASSY PIPE FUEL 2	1			20 021	0	0
020	15231-42184	PIPE FUEL 2	1				0	0
021	14301-42753	CLIP PIPE	2				0	0
022	15231-42032	ASSY PIPE FUEL 3	1			23 024	0	0
023	15231-42192	PIPE FUEL 3	1				0	0
024	14301-42753	CLIP PIPE	2				0	0
025	15231-42064	ASSY PIPE FUEL 4	1			26 027	0	0
026	15231-42294	PIPE FUEL 4	1				0	0
027	14301-42753	CLIP PIPE	2				0	0
028	15231-42502	ASSY PIPE FUEL 2	1			29 030	0	0
029	15231-42512	PIPE FUEL 2	1				0	0
030	10244-42320	CLIP	2				0.001	0.0022
031	15232-88460	LABEL FUEL FILTER	1				0.001	0.0022
032	15231-52033	ASSY PUMP FUEL	1				0	0
033	66591-54552	BAND FUEL FILTER	1				0	0
034	01202-50616	BOLT	1				0.006	0.0132
035	66591-54563	CUSHION 2	1				0	0
036	66591-54592	RUBBER PIPE COVER	2				0	0
037	01202-50620	BOLT	1				0.007	0.0154
038	01150-50865	BOLT	1				0	0
039	04014-50080	WASHER PLAIN	1				0.003	0.0066
040	04512-50080	WASHER SPRING	1				0	0
041	01202-50820	BOLT	1				0.013	0.0286
042	66591-54250	SPRING	2				0.01	0.022
043	37150-32243	SWITCH SAFTY	1				0	0
044	66601-54780	STAY	1				0.109	0.2398

silvernorn.co.uk

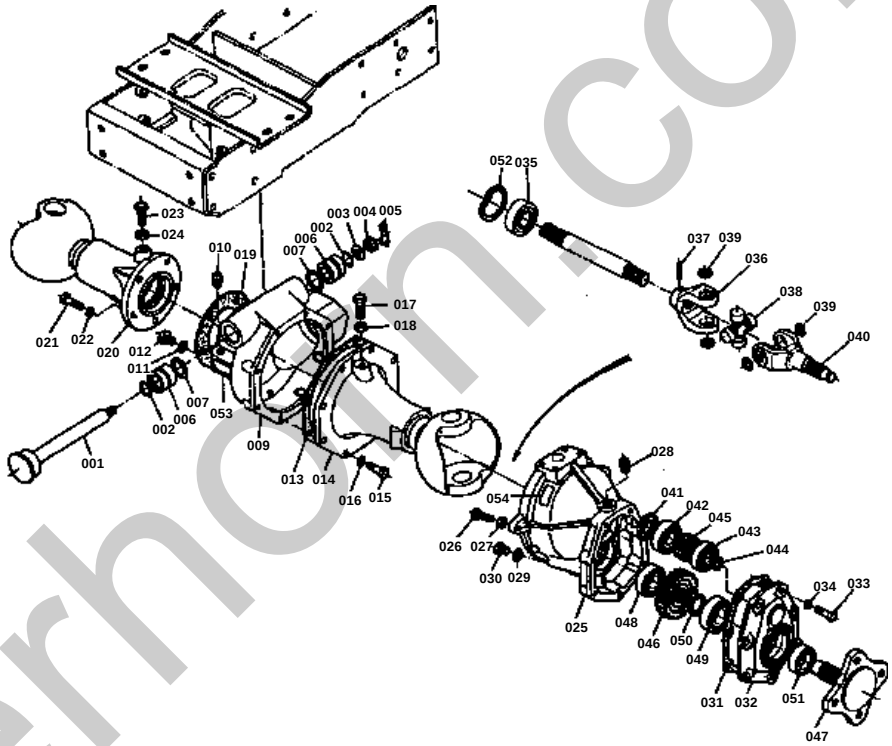

silverhorn.co.uk

↔ Interchangeable; ≠ not interchangeable; ← new for old; → old for new

REF.No	Part No.	Description	Q'ty	S.No.	I/C	REMARKS	Weight (kgf)	Weight (lb)
001	66591-56115	PIN CENTER	1				0.56	1.232
002	04811-00200	O RING	2				0.001	0.0022
003	04011-50180	WASHER PLAIN	1				0.012	0.0264
004	02372-50180	NUT SLOTTED	1				0.019	0.0418
005	66611-57150	SPRING SET	1				0.02	0.044
006	66591-56125	BUSH	2				0	0
007	04811-50250	O RING	2				0.001	0.0022
008	99999-99999	BLANK	0				0	0
009	66591-56169	CASE FRONT AXLE 1	1				0	0
010	06312-10020	PLUG	1				0.015	0.033
011	04717-01000	WASHER SEAL	1				0.001	0.0022
012	06331-35010	PLUG	1				0.012	0.0264
013	66591-56190	PACKING 2	1				0	0
014	66591-56215	CASE FROANT AXLE 2	1				0	0
015	01153-50828	BOLT	8				0.014	0.0308
016	04512-50080	WASHER SPRING	8				0	0
017	66591-56280	BOLT	1				0	0
018	02112-50120	NUT	1				0.007	0.0154
019	66591-56223	PACKING 3	1				0	0
020	66591-56239	CASE FRONT AXLE 3	1				0	0
021	01153-51028	BOLT	5				0.02	0.044
022	04512-50100	WASHER SPRING	5				0	0
023	66591-56280	BOLT	1				0	0
024	02112-50120	NUT	1				0.007	0.0154
025	66591-56480	CASE FRONT WHEEL GEA	2				4	8.8
026	66591-56440	BOLT	2				0.02	0.044
027	02112-50100	NUT	2				0.004	0.0088
028	06312-10020	PLUG	2				0.015	0.033
029	04717-01000	WASHER SEAL	2				0.001	0.0022
030	06311-30010	PLUG	2				0	0
031	66591-56260	PACKING	2				0.006	0.0132
032	66591-56273	COVER GEAR CASE	2				1.1	2.42
033	01150-50828	BOLT	14				0.014	0.0308
034	04512-50080	WASHER SPRING	14				0	0
035	09400-21528	SEAL OIL	2				0.019	0.0418
036	66591-56413	JOINT UNIVERSAL 3	2				0	0
037	05411-10628	PIN SPRING	2				0	0
038	66591-56320	JOINT UNIVERSAL	2			PART 039 INCLUDED	0.185	0.407
039	04611-00200	CIR-CLIP INTERNAL	8				0.001	0.0022
040	66591-56524	SHAFT UNIVERSAL JOIN	2				0	0
041	09230-25405	SEAL OIL	2				0.001	0.0022
042	08101-06204	BEARING BALL	2				0.102	0.2244
043	08101-06302	BEARING BALL	2				0.084	0.1848
044	04612-00150	CIR-CLIP EXTERNAL	2				0.001	0.0022
045	66591-56764	GEAR SPUR 12	2				0	0
046	66591-56774	GEAR SPUR 25	2				0	0
047	66591-56556	HUB FRONT WHEEL	2				0	0
048	08101-06205	BEARING BALL	2				0.14	0.308
049	08101-06206	BEARING BALL	2				0.196	0.4312
050	04612-00290	CIR-CLIP EXTERNAL	2				0.003	0.0066
051	63733-17151	SEAL OIL	2				0	0
052	04611-00520	CIR-CLIP INTERNAL	2				0.009	0.0198
053	66601-48232	LABEL 12	1				0	0
054	66601-48242	LABEL 13	2				0	0

silverhorn.co.uk

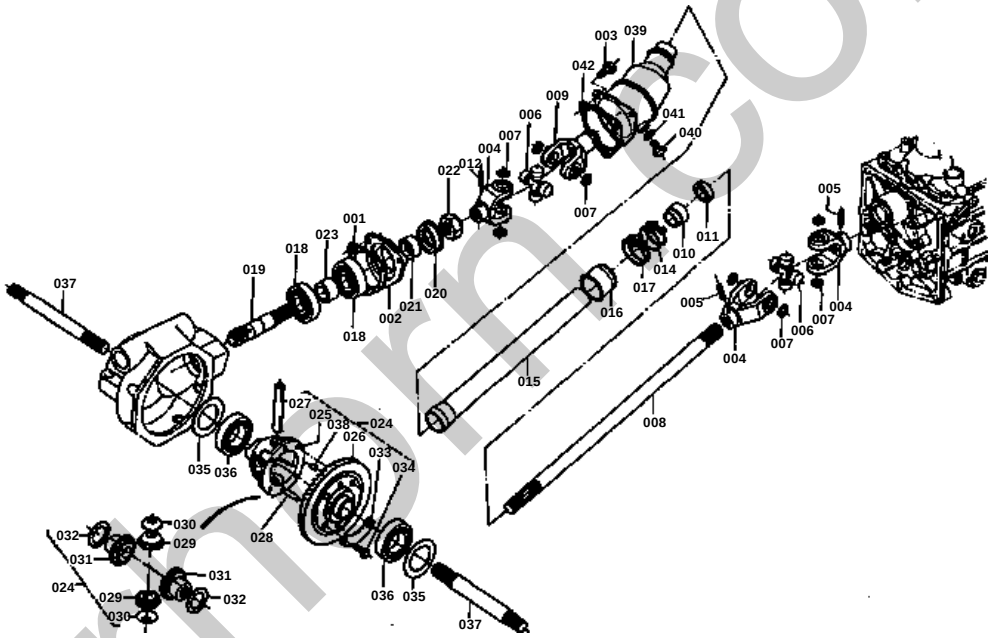

silvermore.co.uk

↔ Interchangeable; ≠ not interchangeable; ← new for old; → old for new

REF.No	Part No.	Description	Q'ty	S.No.	I/C	REMARKS	Weight (kgf)	Weight (lb)
001	66591-56172	PACKING 1	1				0	0
002	66591-56183	COVER	1				0.415	0.913
003	01120-50835	BOLT	3				0	0
004	66591-56315	JOINT UNIVERSAL 1	3				0	0
005	05411-10628	PIN SPRING	3				0	0
006	66591-56320	JOINT UNIVERSAL	2			PART 007 INCLUDED	0.185	0.407
007	04611-00200	CIR-CLIP INTERNAL	8				0.001	0.0022
008	66591-57112	SHAFT FRONT AXLE DRI	1				0	0
009	66591-56345	JOINT UNIVERSAL 2	1				0	0
010	66591-57124	BUSH	1				0	0
011	09230-20325	SEAL OIL	1				0.007	0.0154
012	99999-99999	BLANK	0				0	0
013	99999-99999	BLANK	0				0	0
014	66591-57150	CLIP 1	1				0	0
015	66591-57163	PIPE 2	1				0	0
016	66591-57173	PIPE 3	1				0	0
017	66591-57190	CLIP 3	1				0.029	0.0638
018	08101-06305	BEARIAN BALL	2				0.23	0.506
019	66591-56454	SHAFT PINION BEVEL G	1				0	0
020	66591-56430	SEAL OIL	1				0.019	0.0418
021	66591-56420	BUSH	1				0.021	0.0462
022	31220-22340	NUT	1				0.033	0.0726
023	66591-56463	COLLAR	1				0.05	0.11
024	66591-56405	ASSY DIFF FRONT AXLE	1			025 TO 034 038	0	0
025	66621-56713	CASE DIFF	1				0	0
026	66591-14816	GEAR SPIRAL BEVEL 37	1				0	0
027	66591-14833	SHAFT DIFF PINION	1				0.1	0.22
028	66591-14783	PIN STRAIGHT	1				0.01	0.022
029	66591-14840	GEAR DIFF PINION	2				0.082	0.1804
030	66591-14852	COLLAR THRUST	2				0	0
031	66591-14873	GEAR DIFF SIDE	2				0	0
032	66591-14882	SHIM 1	2			1.0mm	0	0
032	66591-14892	SHIM 2	2			1.2mm	0	0
033	66591-14910	PLATE LOCK	2				0.006	0.0132
034	01156-00820	BOLT	4				0	0
035	66591-14922	SHIM DIFF SIDE 1	1			AS REQUIRED 0.5mm	0	0
035	66591-14934	SHIM DIFF SIDE 2	1			AS REQUIRED 0.2mm	0	0
036	08101-06008	BEARING BALL	2				0.19	0.418
037	66591-56513	SHAFT FRONT WHEEL DR	2				0	0
038	66591-14793	PIN	1				0	0
039	66591-57212	CASE JOINT	1				0	0
040	66591-56890	BOLT	2				0.006	0.0132
041	04717-00600	WASHER	2				0.001	0.0022
042	66591-57223	PACKING	1				0	0

silverhorn.co.uk

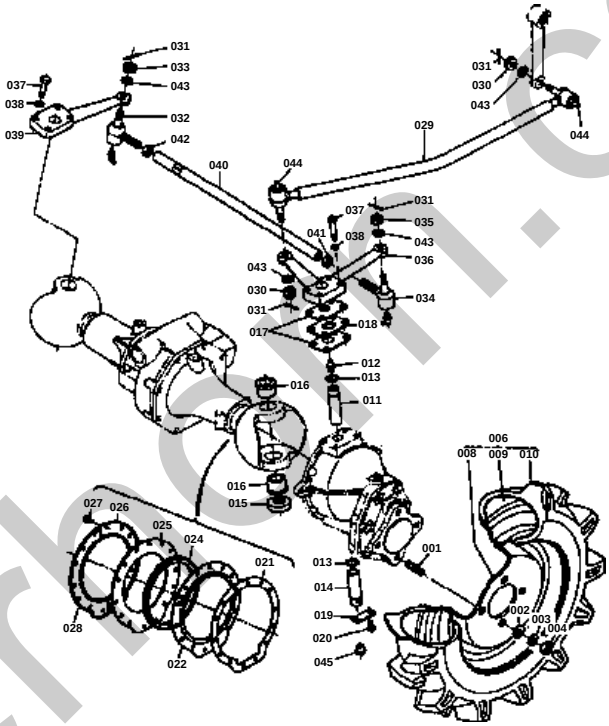

silverhorn.co.uk

↔ Interchangeable; ≠ not interchangeable; ← new for old; → old for new

REF.No	Part No.	Description	Q'ty	S.No.	I/C	REMARKS	Weight (kgf)	Weight (lb)
001	66591-56564	STUD	8				0.028	0.0616
002	04014-50120	WASHER PLAIN	8				0.007	0.0154
003	04512-50120	WASHER SPRING	8				0	0
004	02173-50120	NUT	8				0	0
005	93016-01500	ASSY FRONT WHEEL 6-1	1			NOT SHOWN IN FIG.	0	0
006	93016-01600	ASSY FRONT WHEEL 6-1	1				0	0
007	93016-01700	ASSY FRONT WHEEL 6-1	1			NOT SHOWN IN FIG.	0	0
008	93016-01510	WHEEL	2				0	0
009	93016-01530	TUBE	2				0	0
010	93016-01520	TIRE	2				5	11
011	66591-56610	KINGPIN 1	2				0.156	0.3432
012	06611-15010	NIPPLE GREASE	2				0.01	0.022
013	04811-10180	O RING	4				0.001	0.0022
014	66591-56623	KINGPIN 2	2				0	0
015	08400-00010	BEARING THRUST BALL	2				0.046	0.1012
016	66591-56632	BUSH	4				0	0
017	66591-56640	PACKING	4				0.004	0.0088
018	66591-56653	PLATE LOCK 1	2				0	0
019	66591-56660	PLATE LOCK 2	2				0.016	0.0352
020	01020-50614	BOLT	4				0.005	0.011
021	66591-56672	PACKING	2				0	0
022	66591-56685	HOLDER DUST SEAL 1	2				0	0
023	99999-99999	BLANK	0				0	0
024	66591-56710	SEAL DUST	2				0.01	0.022
025	66591-56722	PACKING FELT	2				0	0
026	66591-56737	COVER DUST 1	2				0	0
027	01020-50616	BOLT	28				0	0
028	66591-56747	COVER DUST 2	2				0	0
029	66591-56819	LINK DRAG	1				0	0
030	66591-56780	NUT SLOTTED	2				0.01	0.022
031	05511-52520	PIN SPLIT	4				0.001	0.0022
032	66591-56834	ASSY END ROD 2	1			PART 033 INCLUDED	0	0
033	02372-50100	NUT SLOTTED	1				0.005	0.011
034	66591-56844	ASSY END ROD 3	1			PART 035 INCLUDED	0	0
035	02372-50100	NUT SLOTTED	1				0.005	0.011
036	66591-56857	ARM KNUCKLE 1	1				0	0
037	01153-50838	BOLT	8				0.017	0.0374
038	04512-50080	WASHER SPRING	8				0	0
039	66591-56865	ARM KNUCKLE 2	1				0	0
040	66591-56872	ROD TIE	1				0	0
041	66591-56880	NUT LH	1				0.01	0.022
042	02116-50120	NUT	1				0.007	0.0154
043	04512-50100	WASHER SPRING	4				0	0
044	66591-56930	NIPPLE GREASE	2				0.003	0.0066
045	66591-51132	PLUG 1	2				0	0

simonorn.co.uk

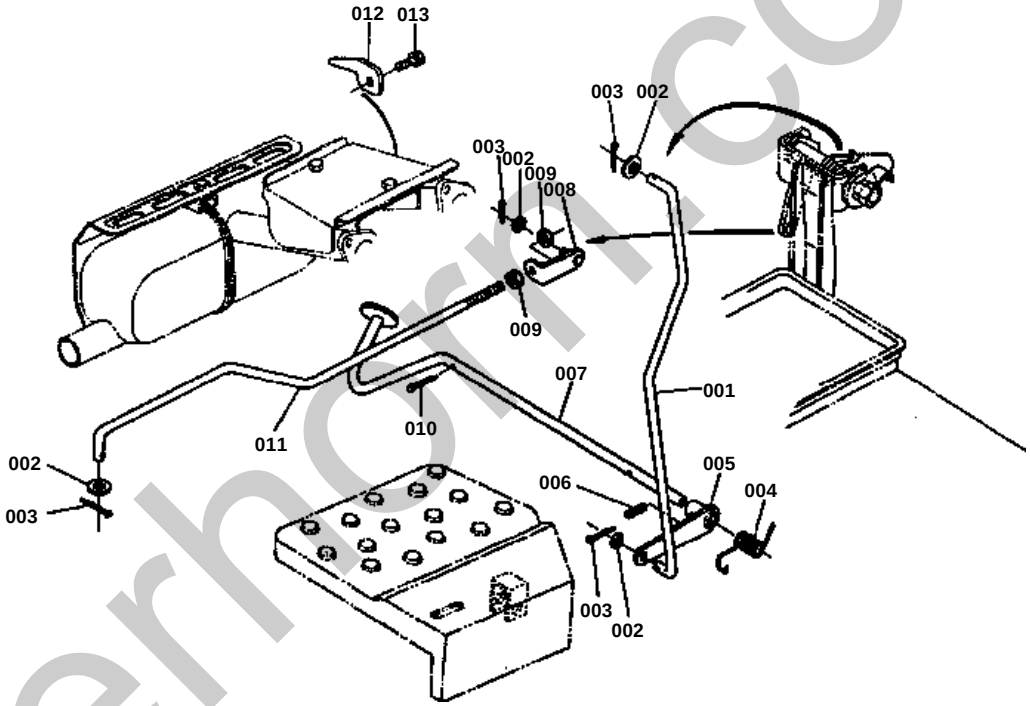

silverhorn.co.uk

ACCELERTOR PEDAL GROUP

↔ Interchangeable; ≠ not interchangeable; ← new for old; → old for new

REF.No	Part No.	Description	Q'ty	S.No.	I/C	REMARKS	Weight (kgf)	Weight (lb)
001	66601-43440	ROD ACCELERATOR PEDA	1				0.084	0.1848
002	04013-50060	WASHER PLAIN	4				0	0
003	05511-50612	PIN SPLIT	4				0.001	0.0022
004	66711-43430	SPRING ACCELERATOR P	1				0.005	0.011
005	66711-43420	FULCRUM ACCELERATOR	1				0.048	0.1056
006	05411-00314	PIN SPRING	1				0.001	0.0022
007	66711-43410	PEDAL ACCELERATOR	1				0.17	0.374
008	66711-43220	METAL	1				0.023	0.0506
009	02014-50060	NUT	2				0.003	0.0066
010	05511-50318	PIN SPLIT	1				0.001	0.0022
011	66601-43230	ROD RELEASE	1				0.13	0.286
012	66601-43290	SUPPORT	1				0.023	0.0506
013	01202-50614	BOLT	1				0.006	0.0132

silverhorn.co.uk

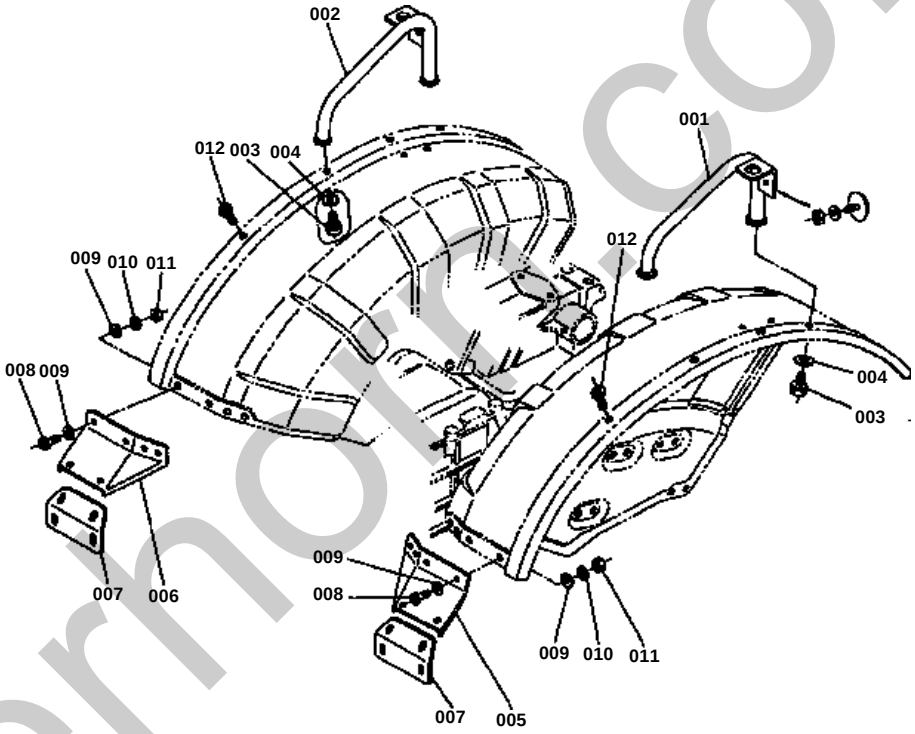

silverhorn.co.uk

↔ Interchangeable; ≠ not interchangeable; ← new for old; → old for new

REF.No	Part No.	Description	Q'ty	S.No.	I/C	REMARKS	Weight (kgf)	Weight (lb)
001	66611-52752	BALUSTRADE LH	1				0	0
002	66611-52762	BALUSTRADE RH	1				0	0
003	01120-50820	BOLT	4				0	0
004	04013-50080	WASHER PLAIN	4				0	0
005	66601-51150	PLATE SUB LH	1				0.1	0.22
006	66601-51160	PLATE SUB RH	1				0.09	0.198
007	66601-51170	STAY	2				0.042	0.0924
008	03014-50614	SCREW	16				0.003	0.0066
009	04013-50060	WASHER PLAIN	32				0	0
010	04512-50060	WASHER SPRING	16				0	0
011	02014-50060	NUT	16				0.003	0.0066
012	03004-50610	SCREW	6				0.004	0.0088

silverhorn.co.uk

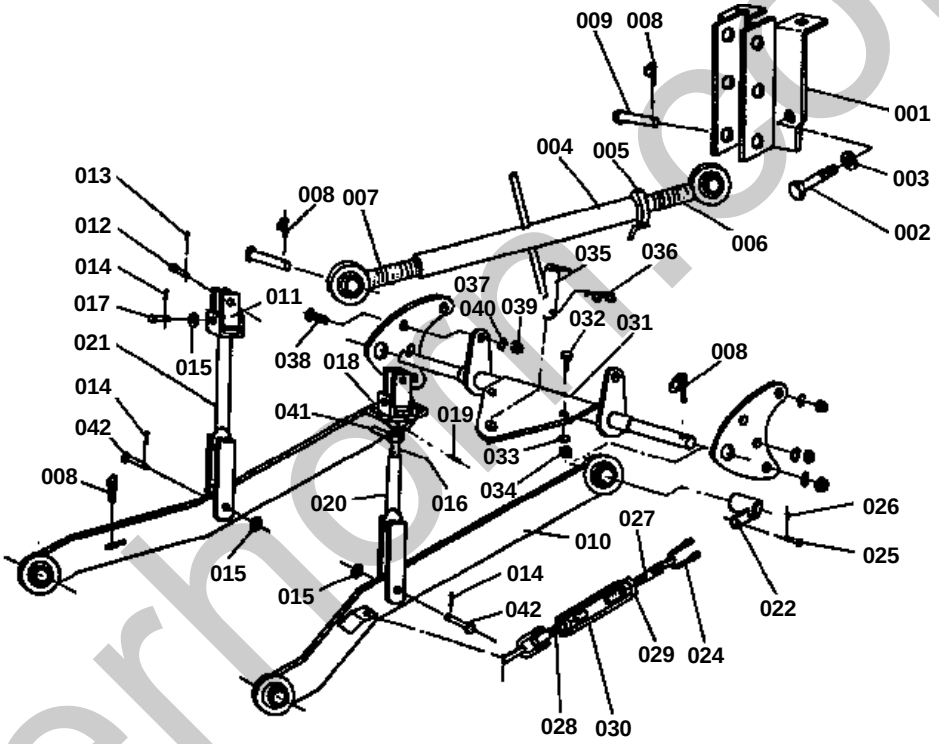

silverhome.co.uk

↔ Interchangeable; ≠ not interchangeable; ← new for old; → old for new

REF.No	Part No.	Description	Q'ty	S.No.	I/C	REMARKS	Weight (kgf)	Weight (lb)
001	96316-05114	BRACKET UPPER LINK	1				0	0
002	01156-51230	BOLT	2				0.037	0.0814
003	04512-50120	WASHER SPRING	2				0	0
004	99261-22110	LINK UPPER	1				0.56	1.232
005	99261-22180	NUT	1				0.04	0.088
006	99261-22210	JOINT RH	1				0.7	1.54
007	99261-22220	JOINT LH	1				0.7	1.54
008	99221-22270	GUIDE	6				0	0
009	99211-22390	PIN UPPER LINK	2				0	0
010	96316-05510	LINK LOWER	2				5.34	11.748
011	96316-05130	SUPPORT LIFT ROD	2				0.24	0.528
012	05112-51235	PIN	2				0.034	0.0748
013	05515-51200	PIN SNAP	2				0	0
014	05511-10325	PIN SPLIT	4				0	0
015	04013-50120	WASHER	4				0	0
016	96316-05140	ROD LIFT RH	1				0.324	0.7128
017	05112-51255	PIN	2				0.052	0.1144
018	96316-05150	HANDLE	1				0.256	0.5632
019	05412-10628	PIN SPRING	1				0	0
020	96316-05520	ROD LIFT	1				0.548	1.2056
021	96316-05530	ROD LIFT LH	1				0.768	1.6896
022	96316-05540	BRACKET	2				0.162	0.3564
023	99999-99999	BLANK	0				0	0
024	31150-71863	JOINT CHAIN	4				0	0
025	31150-71880	PIN	4				0	0
026	05511-10320	PIN SPLIT	4				0	0
027	96316-05230	TURN BACKLE BOLT RH	2				0.12	0.264
028	96316-05240	TURN BACKLE BOLT LH	2				0.115	0.253
029	02112-50120	NUT	2				0.007	0.0154
030	99261-22890	TURN BACKLE	2				0	0
031	66591-81204	COMP HITCH	1				0	0
032	01173-51235	BOLT	2				0.04	0.088
033	04512-50120	WASHER SPRING	2				0	0
034	02173-50120	NUT	2				0	0
035	34150-29720	PIN	1				0.612	1.3464
036	31150-29730	PIN SPRING	1				0.044	0.0968
037	66591-81122	COVER LOWER LINK SID	2				0	0
038	01173-51230	BOLT	2				0.037	0.0814
039	02173-50120	NUT	2				0	0
040	04512-50120	WASHER SPRING	2				0	0
041	96316-05220	NUT	1				0.03	0.066
042	05112-51240	PIN	2				0.039	0.0858

silverhorn.co.uk