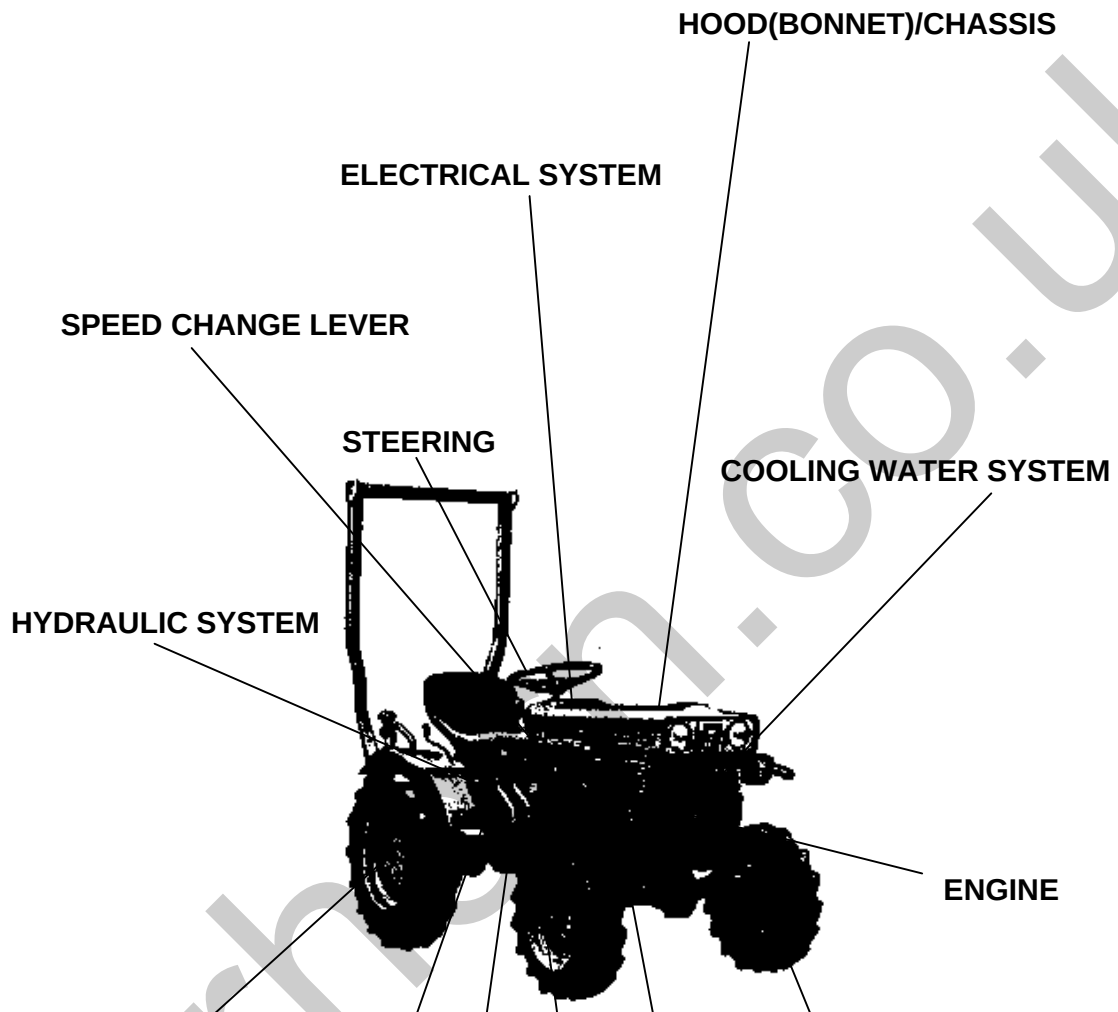

LABELS

ACCESSORIES

silverhorn.co.uk

Item	Part No.	Description	Book
ENGINE	01T001	CRANKCASE GROUP	100K0035
	01T002	CYLINDER HEAD GROUP	100K0035
	01T003	GEAR CASE GROUP	100K0035
	01T004	BEARING CASE GROUP	100K0035
	01T005	BREATHER GROUP	100K0035
	01T006	INLET MANIFOLD GROUP	100K0035
	01T007	VALVE ROCKER ARM GROUP	100K0035
	01T008	HEAD COVER GROUP	100K0035
	01T009	CAMSHAFT GROUP	100K0035
	01T010	PISTON CRANKSHAFT GROUP	100K0035
	01T011	FLYWHEEL GROUP	100K0035
	01T012	NOZZLE HOLDER GROUP	100K0035
	01T013	INJECTION PUMP GROUP	100K0035
	01T014	SPEED CONTROL PLATE GROUP	100K0035
	01T015	GOVERNOR GROUP	100K0035
	01T016	DYNAMO GROUP	100K0035
	01T017	CLUTCH GROUP	100K0035
	01T018	NAME PLATE GROUP	100K0035
	01T019	NOZZLE HOLDER GROUP	100K0035
	01T020	INJECTION PUMP GROUP	100K0035
	01T021	DYNAMO GROUP	100K0035
	01T022	STARTER GROUP	100K0035
	01T023	OIL PRESSURE PUMP GROUP	100K0035
TRANSMISSION	01T024	TRANSMISSION CASE GROUP	100K0035
	01T025	CASE COVER GROUP	100K0035
	01T026	AXLE CASE GROUP	100K0035
REAR AXLE/REAR WHEEL	01T027	REAR WHEEL GROUP [AMERICA]	100K0035
CLUTCH	01T028	CLUTCH ROD GROUP	100K0035
TRANSMISSION	01T029	1ST SHAFT 4TH SHAFT GROUP	100K0035
	01T030	2ND SHAFT REVERSE SHAFT GROUP	100K0035
	01T031	3RD 5TH PTO SHAFT GROUP	100K0035
REAR AXLE/REAR WHEEL	01T032	DIFFERENTIAL GROUP	100K0035
SPEED CHANGE LEVER	01T033	MAIN SPEED CHANGE GROUP	100K0035
	01T034	AUX.SPEED CHANGE GROUP	100K0035
	01T035	ROTARY SPEED CHANGE GROUP	100K0035
BRAKE	01T036	BRAKE GROUP	100K0035
SPEED CHANGE LEVER	01T037	OIL PRESSURE PIPE GROUP	100K0035
HYDRAULIC SYSTEM	01T038	CONTROL VALVE GROUP	100K0035
	01T039	OIL PRESSURE GROUP 1	100K0035
	01T040	OIL PRESSURE GROUP 2	100K0035
STEERING	01T041	STEERING GROUP	100K0035
BRAKE	01T042	BRAKE ROD GROUP	100K0035
ENGINE	01T043	ACCELERATOR PEDAL GROUP	100K0035
HOOD(BONNET)/CHASSIS	01T044	SEAT GROUP	100K0035
LABELS	01T045	NAME PLATE GROUP	100K0035
CLUTCH	01T046	CLUTCH HOUSING GROUP	100K0035
FRONT AXLE/FRONT WHEEL	01T047	FRONT WHEEL SUPPORT GROUP	100K0035
COOLING WATER SYSTEM	01T048	RADIATOR GROUP	100K0035
HOOD(BONNET)/CHASSIS	01T049	FENDER GROUP	100K0035
	01T050	BONNET GROUP	100K0035
ENGINE	01T051	MUFFLER GROUP	100K0035
FUEL SYSTEM	01T052	FUEL TANK GROUP	100K0035
ELECTRICAL SYSTEM	01T053	BATTERY GROUP	100K0035
	01T054	PANEL GROUP	100K0035
ENGINE	01T055	AIR CLEANER GROUP EXCEPT[OVERSEAS]	100K0035
FUEL SYSTEM	01T056	FUEL FILTER GROUP	100K0035

silverton.co.uk

Item	Part No.	Description	Book
HYDRAULIC SYSTEM	01T064	3-POINT LINKAGE GROUP	100K0035
FRONT AXLE/FRONT WHEEL	01T06401	FRONT AXLE GROUP B6100E[AMERICA CANADA]	100K0035
	01T065	FRONT WHEEL GROUP B6100E[AMERICA CANADA]	100K0035
ACCESSORIES	01T067	ACCESSORY AND SERVICE PARTS GROUP	100K0035

silverhorn.co.uk

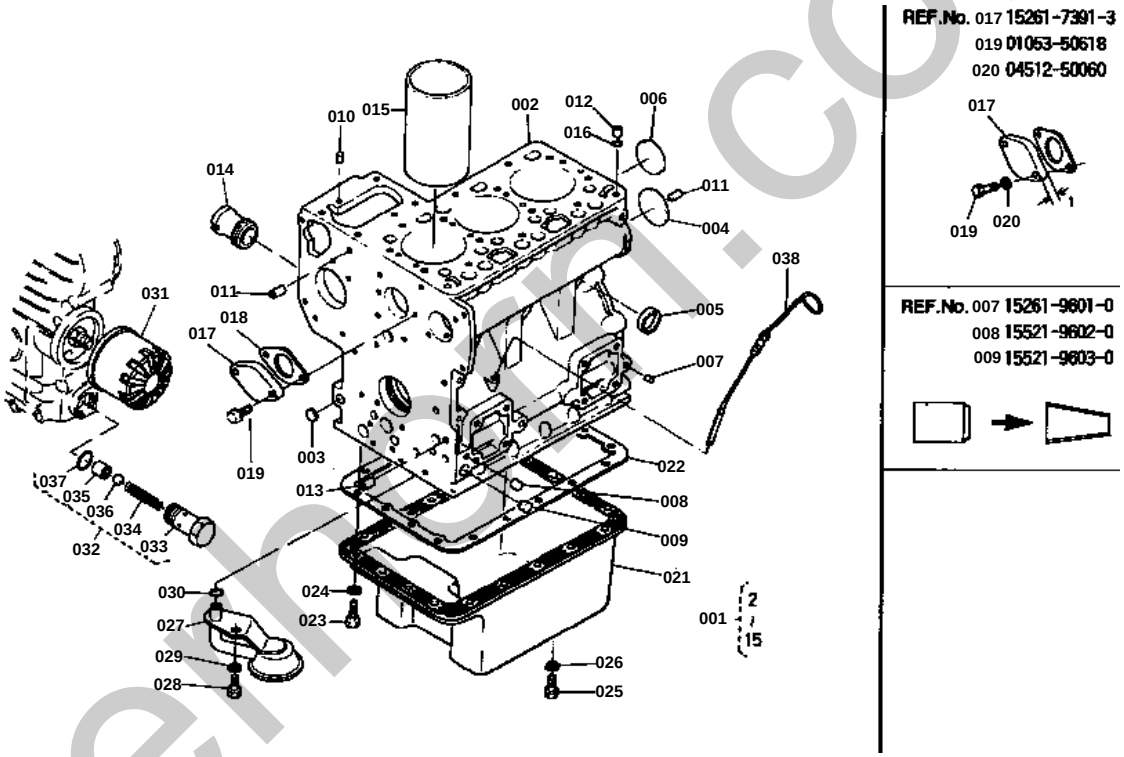

silvermm.co.uk

CRANKCASE GROUP

↔ Interchangeable; ≠ not interchangeable; ← new for old; → old for new

REF.No	Part No.	Description	Q'ty	S.No.	I/C	REMARKS	Weight (kgf)	Weight (lb)
001	15361-01010	ASSY CRANKCASE	1			REF.No.002 TO 015	27	59.4
002	99999-99999	BLANK	0			ORDER BY REF.No.001	0	0
003	06311-75015	PLUG EXPANSION	3				0.002	0.0044
004	06311-75040	PLUG EXPANSION	1				0.02	0.044
005	15321-96260	CAP SEALING	5				0.014	0.0308
006	15221-03490	CAP SEALING	1				0.02	0.044
007	14301-33610	PLUG	6	<=123353			0.001	0.0022
007	15261-96010	PLUG	6	>=123354			0.002	0.0044
008	14301-33630	PLUG	3	<=123353			0.001	0.0022
008	15521-96020	PLUG	3	>=123354			0.003	0.0066
009	15221-33640	PLUG	1	<=123353			0.003	0.0066
009	15521-96030	PLUG	1	>=123354			0.007	0.0154
010	05012-00609	PIN STRAIGHT	2				0.003	0.0066
011	05012-00814	PIN STRAIGHT	2				0.006	0.0132
012	15221-33650	PIN PIPE	1				0.004	0.0088
013	15231-33960	PIN PIPE	2				0.001	0.0022
014	15221-72880	PIPE WATER 2	1				0.115	0.253
015	15281-02310	LINER CYLINDER	3				0.363	0.7986
016	15221-33700	O RING	1				0.001	0.0022
017	15261-73910	COVER WATER	1	<=5060			0.13	0.286
017	15261-73913	COVER WATER	1	>=5061			0	0
018	15261-73920	GASKET WATER COVER	1				0	0
019	01053-50620	BOLT	2	<=5060			0.006	0.0132
019	01053-50618	BOLT	2	>=5061			0.006	0.0132
019	01023-50618	BOLT	2				0.006	0.0132
020	04512-50060	WASHER SPRING	2				0	0
021	15371-01614	OIL PAN	1				1.1	2.42
022	15381-01620	GASKET OIL PAN	1				0	0
023	15381-91090	BOLT	18				0	0
024	04512-50060	WASHER SPRING	18				0	0
025	15221-33750	PLUG	1				0.032	0.0704
026	15109-33660	GASKET	1				0.001	0.0022
027	15371-32110	FILTER OIL 1	1				0.4	0.88
028	01153-50816	BOLT	1				0.01	0.022
029	04512-50080	WASHER SPRING	1				0	0
030	04810-00140	O RING	1				0.001	0.0022
031	15241-32090	CARTRIDGE OIL FILTER	1				0.35	0.77
032	15261-36070	ASSY VALVE RELIEF	1			REF.No.033 TO 037	0.078	0.1716
033	99999-99999	BLANK	0			ORDER BY REF.No.032	0	0
034	99999-99999	BLANK	0			ORDER BY REF.No.032	0	0
035	99999-99999	BLANK	0			ORDER BY REF.No.032	0	0
036	07715-03213	BALL	1				0.004	0.0088
037	04810-00150	O RING	1				0.001	0.0022
038	15371-36410	GAUGE OIL	1				0.021	0.0462

silverhorn.co.uk

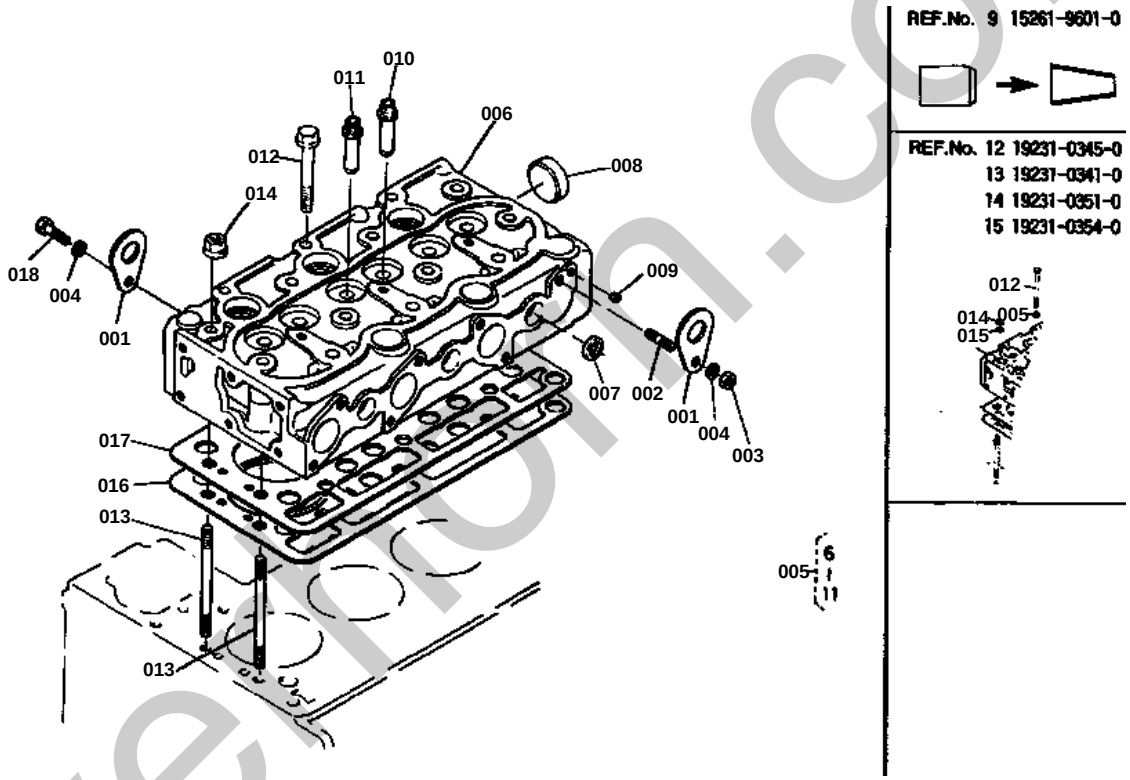

silverfrom.co.uk

CYLINDER HEAD GROUP

↔ Interchangeable; ≠ not interchangeable; ← new for old; → old for new

REF.No	Part No.	Description	Q'ty	S.No.	I/C	REMARKS	Weight (kgf)	Weight (lb)
001	15221-01750	HOOK ENGINE	2				0.04	0.088
002	01513-50816	STUD	2				0.009	0.0198
002	01513-50816	STUD	1	>=1001			0.009	0.0198
003	02156-50080	NUT	2				0.004	0.0088
003	02156-50080	NUT	1	>=1001			0.004	0.0088
004	04512-50080	WASHER SPRING	2				0	0
005	15361-03040	ASSY CYLINDER HEAD	1			REF.No.006 TO 011	9.5	20.9
006	99999-99999	BLANK	0			ORDER BY REF.No.005	0	0
007	15261-03370	CAP SEALING	5				0.005	0.011
008	15321-96260	CAP SEALING	1				0.014	0.0308
009	15131-01380	PLUG	2	<=123353			0.001	0.0022
009	15261-96010	PLUG	2	>=123354			0.002	0.0044
010	15261-13540	GUIDE INLET VALVE	3				0.02	0.044
011	15261-13560	GUIDE EXHAUST VALVE	3				0.02	0.044
012	15261-03450	BOLT CYLINDER HEAD	12	<=198785			0	0
012	19231-03450	BOLT CYLINDER HEAD	12	>=198786			0	0
012	19231-03452	BOLT CYLINDER HEAD	12	>=1001			0.035	0.077
013	15261-03410	STUD CYLINDER HEAD	2	<=198785			0	0
013	19231-03410	STUD CYLINDER HEAD	2	>=198786			0	0
013	19231-03412	STUD CYLINDER HEAD	2	>=1001			0.035	0.077
014	15261-03510	NUT CYLINDER HEAD	2	<=198785			0.006	0.0132
014	19231-03510	NUT CYLINDER HEAD	2	>=198786			0	0
014	19231-03512	NUT CYLINDER HEAD	2	>=1001			0.01	0.022
015	15261-03540	WASHER PLAIN	14	<=198785			0.002	0.0044
016	15361-03310	GASKET CYLINDER HEAD	1				0.064	0.1408
017	15361-03320	SHIM CYLINDER HEAD	1				0.031	0.0682
018	01153-50816	BOLT	1				0.01	0.022

silverhorn.co.uk

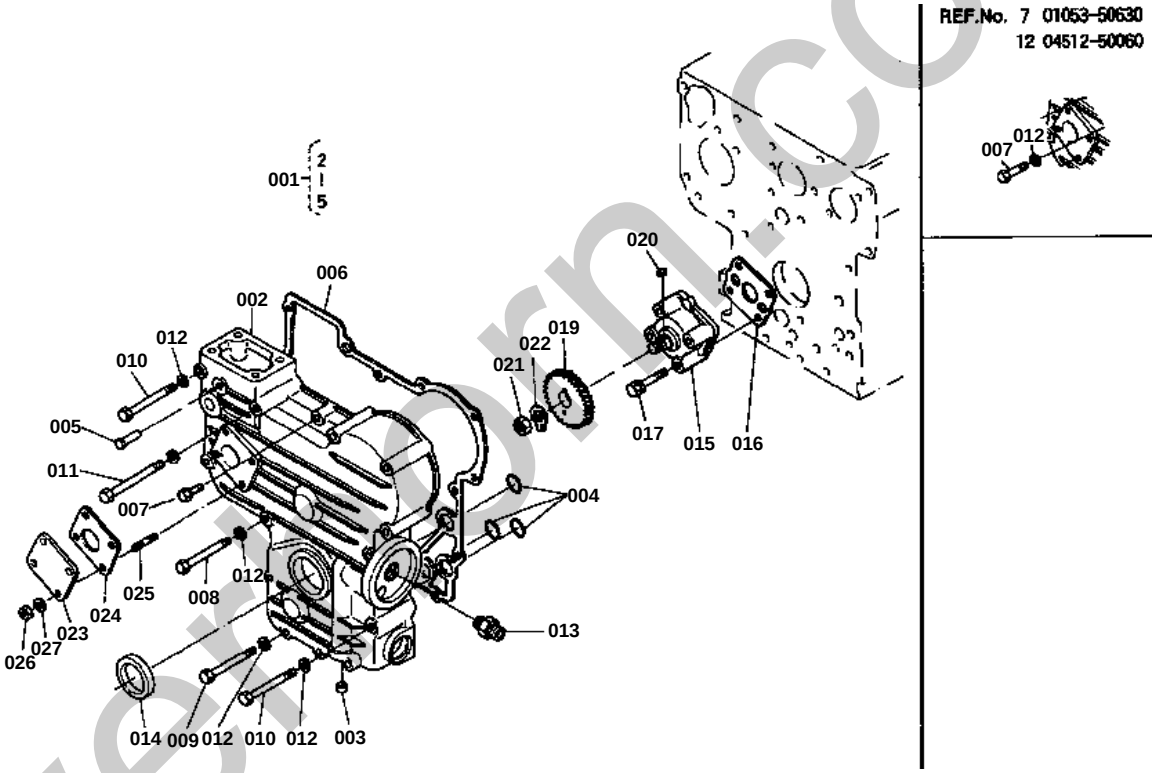

silverthorn.co.uk

GEAR CASE GROUP

↔ Interchangeable; ≠ not interchangeable; ← new for old; → old for new

REF.No	Part No.	Description	Q'ty	S.No.	I/C	REMARKS	Weight (kgf)	Weight (lb)
001	15381-04020	ASSY CASE GEAR	1			REF.No.002 TO 005	0	0
002	99999-99999	BLANK	0			ORDER BY REF.No.001	0	0
003	15221-33640	PLUG PIN	2				0.003	0.0066
004	04810-06130	O RING	3				0	0
004	04811-06130	O RING	3	>=1001			0.001	0.0022
005	15221-56280	PIN START SPRING	1				0.006	0.0132
006	15261-04130	GASKET GEAR CASE	1				0	0
007	01053-50630	BOLT	1				0.009	0.0198
007	01023-50630	BOLT	1				0.008	0.0176
008	01053-50660	BOLT	3				0.014	0.0308
009	01053-50665	BOLT	8				0.015	0.033
010	01053-50670	BOLT	1				0.014	0.0308
011	14611-91060	BOLT	1				0.015	0.033
012	04512-50060	WASHER SPRING	14				0	0
012	04512-50060	WASHER SPRING	13				0	0
013	15241-32290	PIPE JOINT	1				0.053	0.1166
014	09550-00008	SEAL OIL	1				0.01	0.022
015	15261-35010	ASSY PUMP OIL	1				0.32	0.704
016	15261-35150	GASKET OIL PUMP	1				0	0
017	15261-91022	BOLT	4				0.012	0.0264
018	04512-50060	WASHER SPRING	4				0	0
019	15261-35660	GEAR OIL PUMP DRIVE	1				0	0
019	15954-35660	GEAR OIL PUMP DRIVE	1	>=1001			0.14	0.308
020	05712-00410	KEY FEATHER	1				0.001	0.0022
021	02016-50100	NUT	1				0.009	0.0198
022	04211-50100	WASHER CLAW	1				0.002	0.0044
023	15223-83340	COVER	1				0.152	0.3344
024	15221-88130	GASKET	1				0	0
025	15221-88210	STUD	4				0.005	0.011
026	02056-50060	NUT	4				0.002	0.0044
027	04512-50060	WASHER SPRING	4				0	0

silverhorn.co.uk

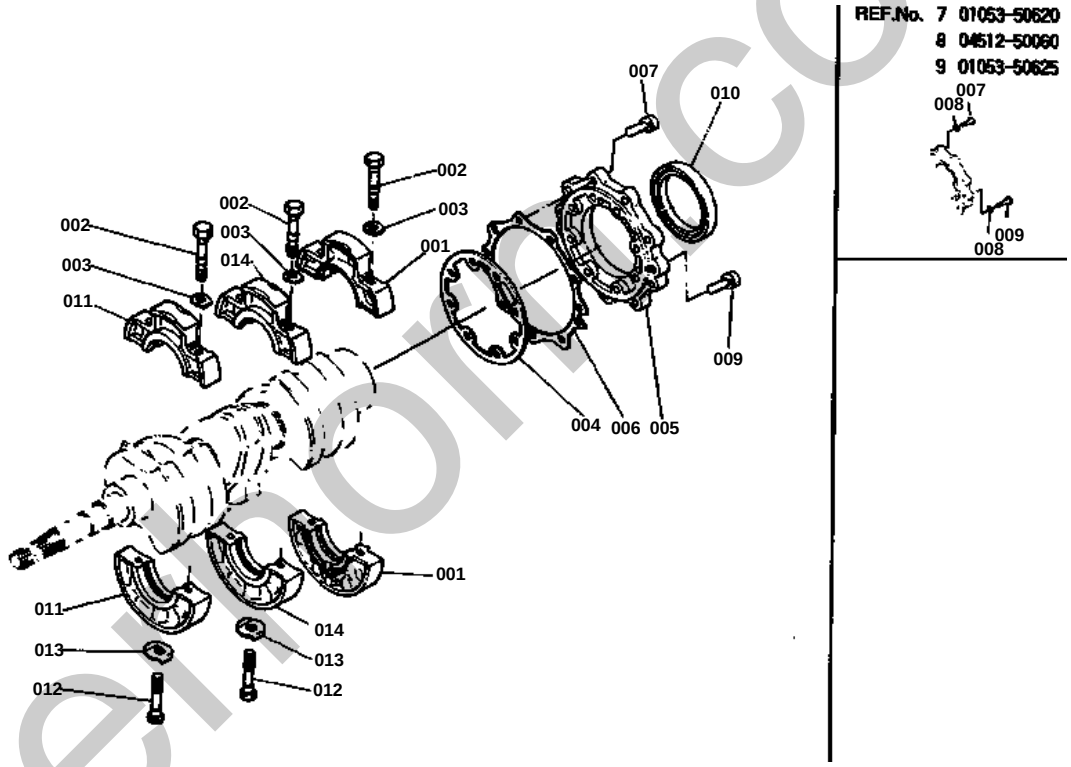

silverhomeco.uk

BEARING CASE GROUP

↔ Interchangeable; ≠ not interchangeable; ← new for old; → old for new

REF.No	Part No.	Description	Q'ty	S.No.	I/C	REMARKS	Weight (kgf)	Weight (lb)
001	15261-04090	CASE MAIN BEARING 1	1				0.8	1.76
002	15261-04540	BOLT BEARING CASE	6				0.02	0.044
003	15261-04570	WASHER BEARING CASE	6				0.001	0.0022
004	15261-04360	GASKET BEARING CASE	1				0	0
005	15261-04810	COVER BEARING CASE	1	<=188651			0.204	0.4488
005	15549-04810	COVER BEARING CASE	1	>=188652			0.2	0.44
006	15261-04820	GASKET BRG.CASE COV.	1				0	0
007	01053-50620	BOLT	9				0.006	0.0132
007	01023-50620	BOLT	9				0.006	0.0132
008	04512-50060	WASHER SPRING	17				0	0
009	01053-50625	BOLT	8				0.007	0.0154
009	01023-50625	BOLT	8				0.007	0.0154
010	09560-00007	SEAL OIL	1	<=188651			0.029	0.0638
010	19215-04460	SEAL OIL	1	>=188652			0.03	0.066
011	15261-04040	CASE MAIN BEARING 2	1				0.687	1.5114
012	15261-04560	BOLT BEARING CASE	2				0.02	0.044
013	15261-04590	WASHER BEARING CASE	2				0.004	0.0088
014	15381-04050	CASE MAIN BEARING 3	1				0.688	1.5136

silverhorn.co.uk

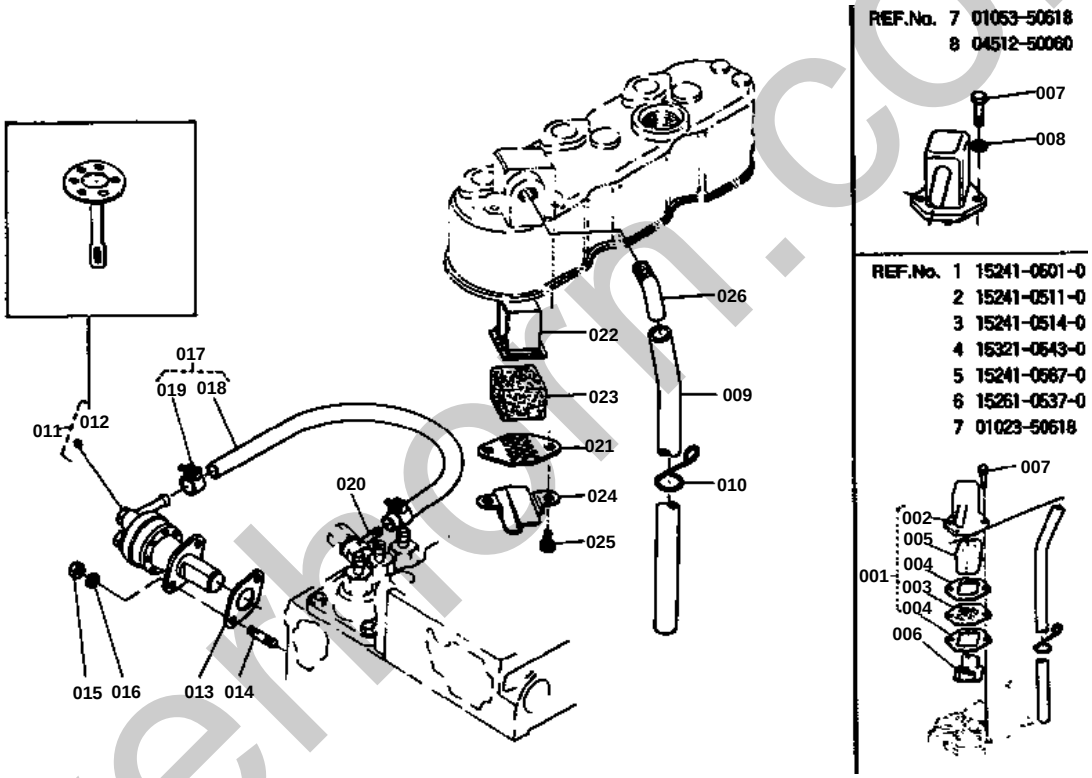

silverthorn.co.uk

BREATHER GROUP

↔ Interchangeable; ≠ not interchangeable; ← new for old; → old for new

REF.No	Part No.	Description	Q'ty	S.No.	I/C	REMARKS	Weight (kgf)	Weight (lb)
001	15241-05010	ASSY BREATHER	1	<=57715		REF.No.002 TO 005	0.15	0.33
002	15241-05110	BREATHER	1	<=57715			0.13	0.286
003	15241-05140	PLATE ELEMENT	1	<=57715			0.009	0.0198
004	15321-05430	GASKET COV.BREATHER	2	<=57715			0	0
005	15241-05670	ELEMENT BREATHER	1	<=57715			0.008	0.0176
006	15261-05370	OIL SHIELD BREATHER	1	<=57715			0.005	0.011
007	01053-50618	BOLT	2				0.006	0.0132
007	01023-50618	BOLT	2	<=57715			0.006	0.0132
008	04512-50060	WASHER SPRING	2	<=57715			0	0
009	15261-05510	PIPE BREATHER	1				0.069	0.1518
010	15261-05590	CLAMP PIPE	1	<=57715			0.004	0.0088
010	15951-05590	CLAMP PIPE	1	>=57716			0.003	0.0066
011	15381-52030	PUMP FUEL	1			REF.No.012	0	0
012	15381-52040	COMP DIAPHRAGM	1				0	0
013	15241-52140	GASKET FUEL PUMP	1				0	0
014	01513-50616	STUD	2				0.004	0.0088
015	02056-50060	NUT	2				0.002	0.0044
016	04512-50060	WASHER SPRING	2				0	0
017	15261-42010	ASSY PIPE FUEL	1			REF.No.018 019	0.032	0.0704
018	99999-99999	BLANK	0			ORDER BY REF.No.017	0	0
019	14301-42750	CLIP PIPE 2	2				0.005	0.011
020	14111-42410	JOINT	1				0.025	0.055
021	15951-05140	PLATE ELEMENT 1	1	>=57716			0.005	0.011
022	15521-05150	PLATE ELEMENT 2	1	>=57716			0.01	0.022
023	15521-05670	ELEMENT BREATHER	1	>=57716			0.01	0.022
024	15951-05370	OIL SHIELD BREATHER	1	>=57716			0.005	0.011
025	03024-50510	SCREW	2	>=57716			0.002	0.0044
026	15521-05550	JOINT BREATHER PIPE	1	>=57716			0.04	0.088

silverhorn.co.uk

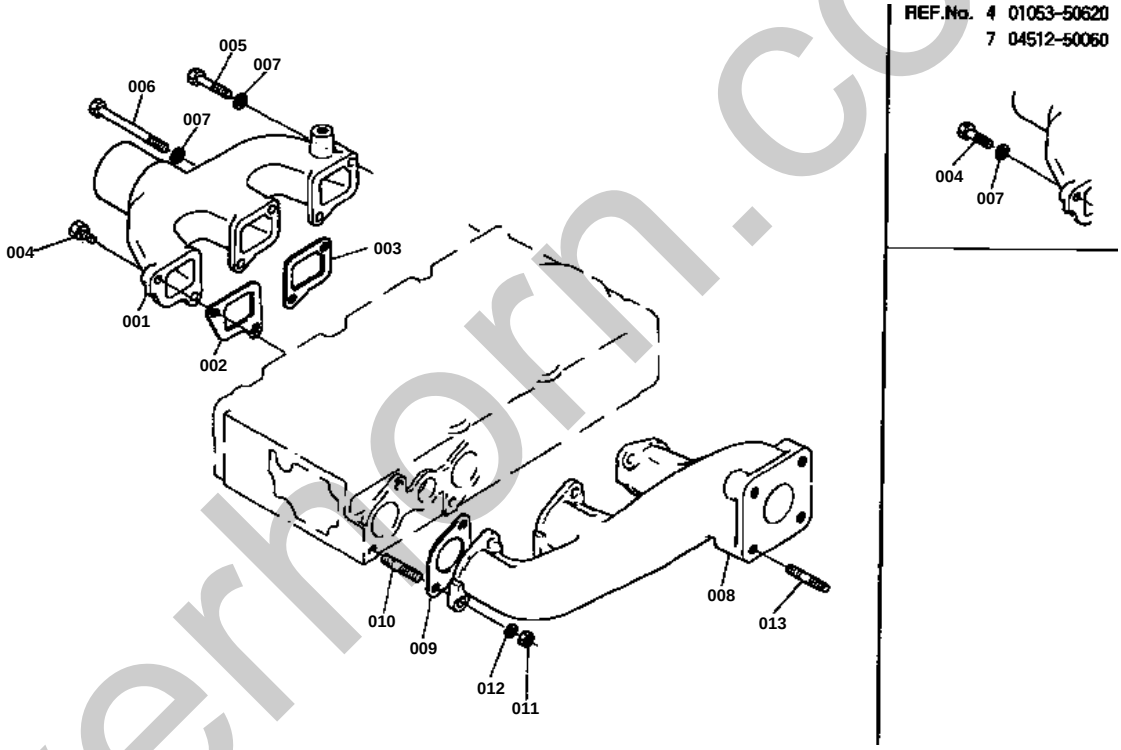

silverhorn.co.uk

INLET MANIFOLD GROUP

↔ Interchangeable; ≠ not interchangeable; ← new for old; → old for new

REF.No	Part No.	Description	Q'ty	S.No.	I/C	REMARKS	Weight (kgf)	Weight (lb)
001	15371-11760	MANIFOLD INLET	1				0.45	0.99
002	15261-11820	GASKET IN-MANIFOLD 1	1				0	0
003	15261-11830	GASKET IN-MANIFOLD 2	2				0	0
004	01053-50620	BOLT	4				0.006	0.0132
004	01023-50620	BOLT	4				0.006	0.0132
005	01053-50660	BOLT	1				0.014	0.0308
006	15381-91070	BOLT	1				0.016	0.0352
007	04512-50060	WASHER SPRING	6				0	0
007	04512-50060	WASHER SPRING	2				0	0
008	15371-12310	MANIFOLD EXHAUST	1				1.77	3.894
009	15261-12360	GASKET EX-MANIFOLD	3				0	0
010	15381-91532	STUD	6				0.005	0.011
011	02056-50060	NUT	6				0.002	0.0044
012	04512-50060	WASHER SPRING	6				0	0
013	01513-50822	STUD	4				0.01	0.022

silverhorn.co.uk

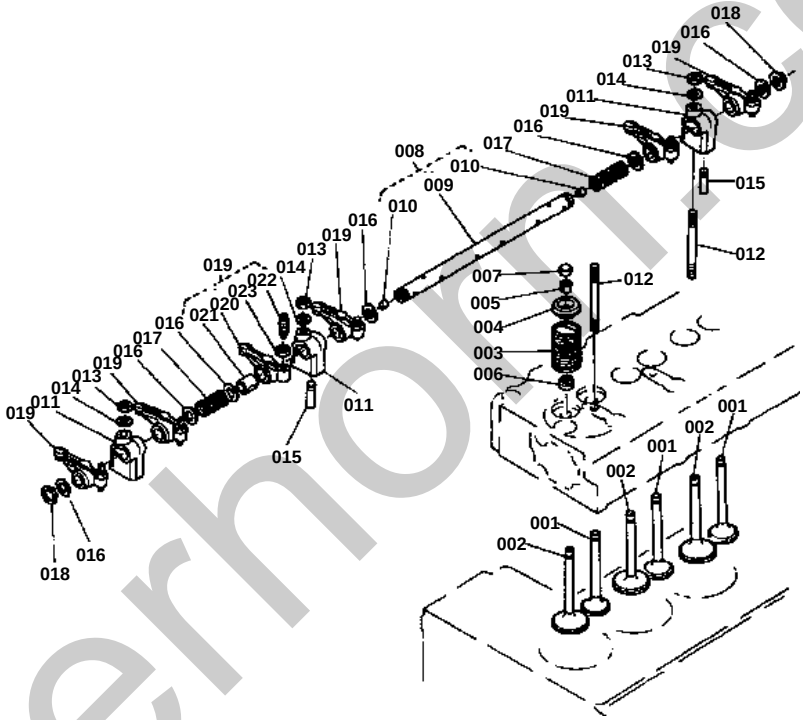

silverhorse.co.uk

VALVE ROCKER ARM GROUP

↔ Interchangeable; ≠ not interchangeable; ← new for old; → old for new

REF.No	Part No.	Description	Q'ty	S.No.	I/C	REMARKS	Weight (kgf)	Weight (lb)
001	15261-13110	VALVE INLET	3				0.043	0.0946
002	15261-13120	VALVE EXHAUST	3				0.038	0.0836
003	15261-13240	SPRING VALVE	6				0.02	0.044
004	15261-13330	RETAINER VALVE SP.	6				0	0
005	15261-13360	COLLET VALVE SPRING	12				0.004	0.0088
006	15261-13150	SEAL VALVE STEM	6				0.001	0.0022
007	15261-13280	CAP VALVE	6				0	0
008	15371-14050	ASSY SHAFT ROCK.ARM	1			REF.No.009	0.133	0.2926
009	99999-99999	BLANK	0			ORDER BY REF.No.008	0	0
010	03410-50606	SCREW SET	2				0.001	0.0022
011	15261-14350	BRACKET ROCKER ARM	3				0.032	0.0704
012	15261-14410	STUD	3	<=57715			0.02	0.044
012	15951-14410	STUD	3	>=57716			0	0
013	15261-92010	NUT	3				0.005	0.011
014	15261-94010	WASHER PLAIN	3				0.002	0.0044
015	15261-14420	SCREW SET	1				0.002	0.0044
016	15261-14430	WASHER ROCKER ARM	6				0.001	0.0022
017	15261-14310	SPRING ROCKER ARM	2				0.003	0.0066
018	04612-00110	CIR-CLIP EXTERNAL	2				0.001	0.0022
019	15261-14030	ASSY ROCKER ARM	6			REF.No.020 TO 023	0	0
020	99999-99999	BLANK	0			ORDER BY REF.No.019	0	0
021	15261-14180	BUSH ROCKER ARM	6				0	0
022	15261-14232	SCREW ADJUSTING	6				0.006	0.0132
023	15261-14240	NUT	6				0.002	0.0044

silverhorn.co.uk

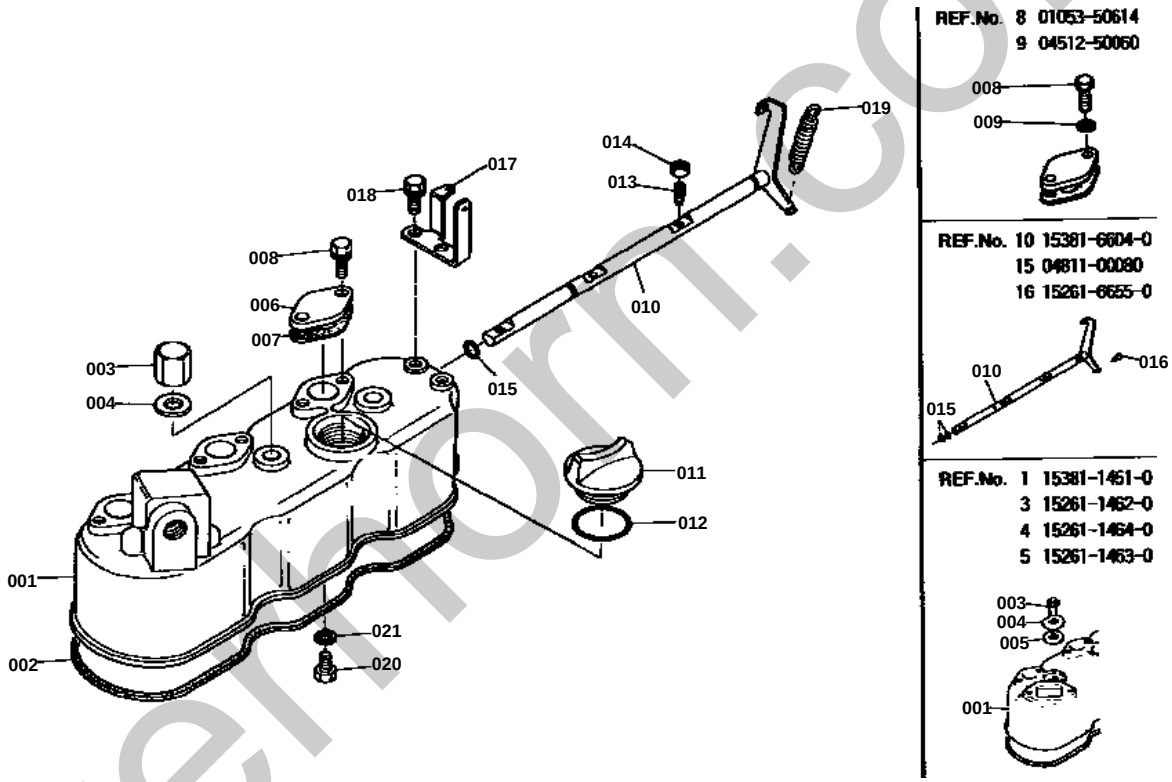

silvermorr.co.uk

HEAD COVER GROUP

↔ Interchangeable; ≠ not interchangeable; ← new for old; → old for new

REF.No	Part No.	Description	Q'ty	S.No.	I/C	REMARKS	Weight (kgf)	Weight (lb)
001	15381-14510	COVER CYLINDER HEAD	1	<=57715			0	0
001	15531-14510	COVER CYLINDER HEAD	1	>=57716			0.66	1.452
002	15381-14520	GASKET HEAD COVER	1				0.005	0.011
003	15261-14620	NUT HEAD COVER	3	<=57715			0.014	0.0308
003	15951-92330	NUT CAP	3	>=57716			0	0
004	15261-14640	WASHER HEAD COVER	3	<=57715			0.006	0.0132
004	15951-96660	GASKET	3	>=57716			0.001	0.0022
005	15261-14630	GASKET NUT	3	<=57715			0.002	0.0044
006	15261-66630	COVER DECOMP.HOLE	3				0.023	0.0506
007	15261-66640	GASKET HOLE COVER	3				0	0
008	01053-50614	BOLT	6				0.005	0.011
008	01023-50614	BOLT	6				0.005	0.011
009	04512-50060	WASHER SPRING	6				0	0
010	15381-66040	SHAFT DECOMPRESS	1				0	0
010	15531-66040	SHAFT DECOMPRESS	1	>=1001			0.2	0.44
011	15221-33140	PLUG OIL FILLER	1				0.038	0.0836
012	04811-50300	O RING	1				0.001	0.0022
013	15261-66350	BOLT DECOMPRESS	3				0.002	0.0044
014	02056-50050	NUT	3				0.002	0.0044
015	04811-00080	O RING	2				0.001	0.0022
015	04811-00080	O RING	1				0.001	0.0022
016	15261-66550	STOPPER DECOMP.SHAFT	1	<=57715			0.01	0.022
017	15261-66190	HOLDER DECOMP.WIRE	1				0.03	0.066
018	01023-50614	BOLT	2				0.005	0.011
019	15221-66280	SPRING DECOMPRESS	1				0.008	0.0176
020	15221-66410	BOLT	1				0.005	0.011
021	04512-50060	WASHER SPRING	1				0	0

silverhorn.co.uk

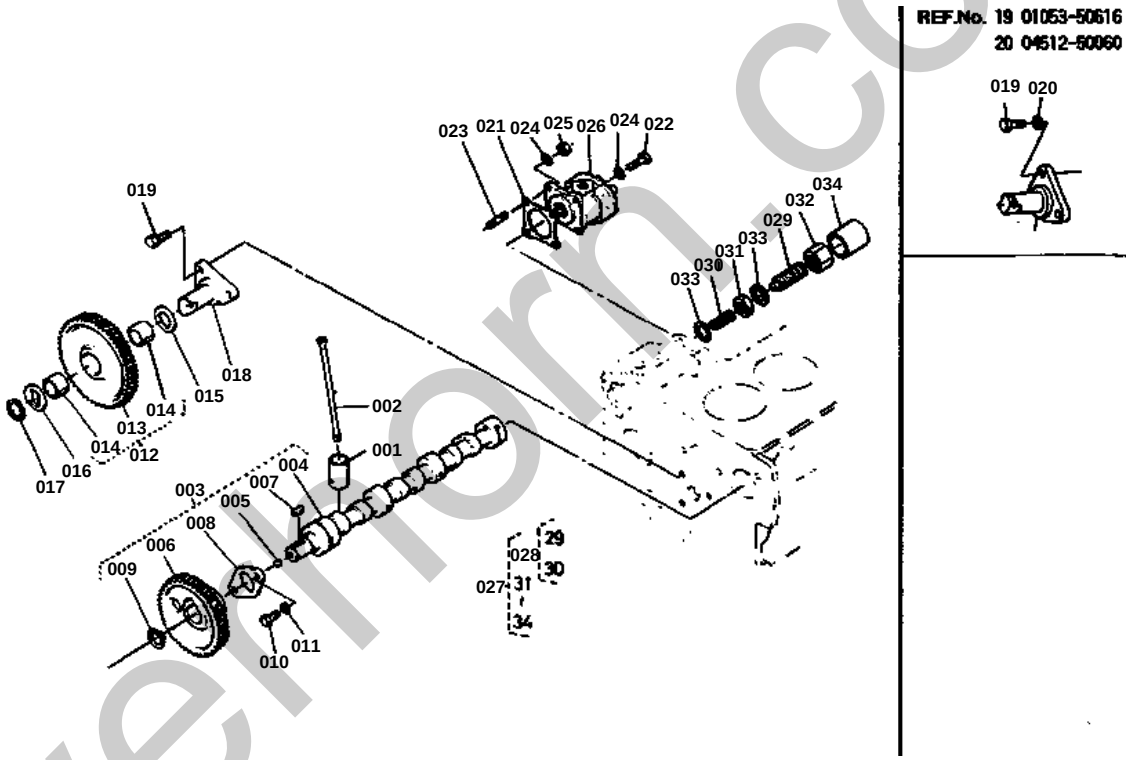

silvermorn.co.uk

CAMSHAFT GROUP

↔ Interchangeable; ≠ not interchangeable; ← new for old; → old for new

REF.No	Part No.	Description	Q'ty	S.No.	I/C	REMARKS	Weight (kgf)	Weight (lb)
001	15261-15550	TAPPET	6				0.03	0.066
002	15261-15110	ROD PUSH	6				0.022	0.0484
003	15381-16010	ASSY CAMSHAFT	1			REF.No.004 TO 009	1.045	2.299
004	15381-16150	CAMSHAFT	1				0.95	2.09
005	15261-96860	PLUG	2				0.001	0.0022
005	15261-96880	PLUG	2	>=1001			0.002	0.0044
006	15261-16510	GEAR CAMSHAFT	1				0.354	0.7788
007	05712-00515	KEY FEATHER	1				0.003	0.0066
008	15261-16270	STOPER CAMSHAFT	1				0.034	0.0748
009	04612-00180	CIR-CLIP EXTERNAL	1				0.001	0.0022
010	01053-50614	BOLT	2				0.005	0.011
011	04512-50060	WASHER SPRING	2				0	0
012	15261-24010	ASSY GEAR IDLE	1			REF.No.013 014	0.59	1.298
013	99999-99999	BLANK	0			ORDER BY REF.No.012	0	0
014	15261-24980	BUSH IDLE GEAR	2				0.006	0.0132
015	15261-24360	COLLAR IDLE GEAR	1				0.008	0.0176
016	15261-24370	COLLAR IDLE GEAR	1				0.008	0.0176
017	15261-24320	CIR-CLIP IDLE GEAR	1				0.004	0.0088
018	15261-24250	SHAFT IDLE GEAR	1				0.2	0.44
019	01053-50616	BOLT	3				0.005	0.011
019	01023-50616	BOLT	3				0.005	0.011
020	04512-50060	WASHER SPRING	3				0	0
021	15231-87130	GASKET O/P PUMP	1				0	0
022	01153-50822	BOLT	3				0.011	0.0242
023	01513-50822	STUD	1				0.01	0.022
024	04512-50080	WASHER SPRING	4				0	0
025	02156-50080	NUT	1				0.004	0.0088
026	66621-36100	ASSY GEAR PUMP	1				0	0
026	67211-76100	ASSY GEAR PUMP	1	>=1001			1.45	3.19
027	15261-54090	ASSY APPARATUS IDL.	1			REF.No.028 031 TO 034	0.027	0.0594
028	15261-54100	ASSY BOLT ADJUSTING	1			REF.No.029 030	0.008	0.0176
029	99999-99999	BLANK	0			ORDER BY REF.No.028	0	0
030	99999-99999	BLANK	0			ORDER BY REF.No.028	0	0
031	15261-92020	NUT	1				0.004	0.0088
032	15261-92330	NUT CAP	1				0.01	0.022
033	15021-33660	GASKET	2				0.001	0.0022
034	15261-54270	CAP	1				0.002	0.0044

silvermorn.co.uk

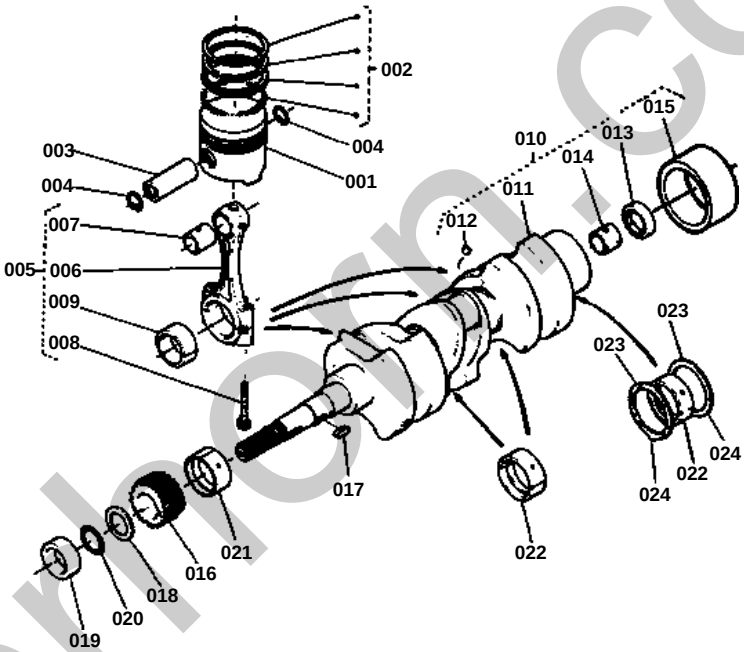

silverhorn.co.uk

PISTON CRANKSHAFT GROUP

↔ Interchangeable; ≠ not interchangeable; ← new for old; → old for new

REF.No	Part No.	Description	Q'ty	S.No.	I/C	REMARKS	Weight (kgf)	Weight (lb)
001	15281-21110	PISTON	3			STD	0.266	0.5852
001	15281-21910	PISTON	3			+0.5MM	0.26	0.572
002	15361-21050	ASSY RINGS PISTON	3			STD	0.022	0.0484
002	15361-21090	ASSY RINGS PISTON	3			+0.5MM	0.02	0.044
003	15261-21310	PISTON PIN	3				0.102	0.2244
004	15261-21330	CIR-CLIP PISTON PIN	6				0.001	0.0022
005	15261-22010	ASSY CONNECTING ROD	3			REF.No.006 TO 009	0	0
005	15531-22010	ASSY CONNECTING ROD	3	>=1001		REF.No.006 TO 009	0	0
006	99999-99999	BLANK	0			ORDER BY REF.No.005	0	0
007	15261-21980	BUSH PISTON PIN	3				0.012	0.0264
008	15261-21440	BOLT CONNECTING ROD	6				0	0
009	15261-22310	METAL CRANK PIN	3			STD SET	0	0
009	15531-22310	METAL CRANK PIN	3	>=1001		STD SET	0	0
009	15531-22970	METAL CRANK PIN	3			SET -0.2MM	0	0
009	15531-22980	METAL CRANK PIN	3			SET -0.4MM	0	0
010	15371-23010	ASSY CRANKSHAFT	1	<=188651		REF.No.011 TO 014	0	0
010	15372-23010	ASSY CRANKSHAFT	1	>=188652		REF.No.011 TO 015	8	17.6
011	99999-99999	BLANK	0			ORDER BY REF.No.010	0	0
012	15131-01380	PLUG PIN	3				0.001	0.0022
013	09400-14247	SEAL OIL	1				0.004	0.0088
014	66621-14120	BEARING DRY	1				0.006	0.0132
015	19215-23280	SLEEVE CRANKSHAFT	1	>=188652			0.05	0.11
016	15261-24110	GEAR CRANKSHAFT	1				0.164	0.3608
017	05712-00515	KEY FEATHER	1				0.003	0.0066
018	15261-23310	OIL SLING.CRANKSHAFT	1				0.008	0.0176
019	15261-23250	COLLAR CRANKSHAFT	1	<=188651			0	0
019	15956-23250	COLLAR CRANKSHAFT	1	>=188652			0	0
020	04811-10220	O RING	1				0.001	0.0022
021	15261-23470	METAL CRANKSHAFT	1			STD	0	0
021	15261-23910	METAL CRANKSHAFT	1			-0.2MM	0	0
021	15261-23920	METAL CRANKSHAFT	1			-0.4MM	0	0
022	15261-23480	METAL CRANKSHAFT	3			STD SET	0	0
022	15261-23930	METAL CRANKSHAFT	3			SET -0.2MM	0	0
022	15261-23940	METAL CRANKSHAFT	3			SET -0.4MM	0	0
023	15261-23530	METAL SIDE 1	2			STD	0.006	0.0132
023	15261-23950	METAL SIDE 1	2			+0.2MM	0.006	0.0132
023	15261-23960	METAL SIDE 1	2			+0.4MM	0.007	0.0154
024	15261-23540	METAL SIDE 2	2			STD	0.007	0.0154
024	15261-23970	METAL SIDE 2	2			+0.2MM	0.006	0.0132
024	15261-23980	METAL SIDE 2	2			+0.4MM	0.007	0.0154

silverthorn.co.uk

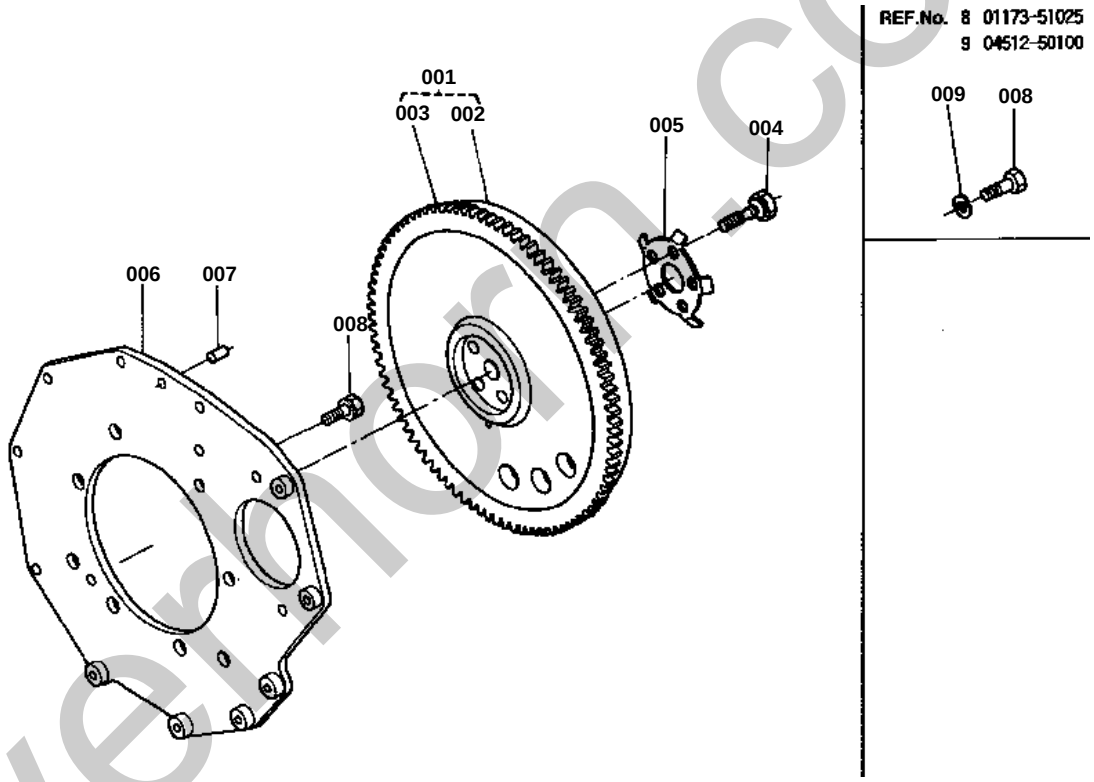

silverthorn.co.uk

FLYWHEEL GROUP

↔ Interchangeable; ≠ not interchangeable; ← new for old; → old for new

REF.No	Part No.	Description	Q'ty	S.No.	I/C	REMARKS	Weight (kgf)	Weight (lb)
001	15371-25010	ASSY FLYWHEEL	1			REF.No.002 003	0	0
001	15375-25010	ASSY FLYWHEEL	1	>=1001		REF.No.002 003	0	0
002	99999-99999	BLANK	0			ORDER BY REF.No.001	0	0
003	15261-63820	GEAR RING	1				0	0
004	15261-25160	BOLT FLYWHEEL	5				0.03	0.066
005	15261-25170	WASHER FLYWHEEL	1				0.02	0.044
006	15261-04620	PLATE REAR END	1				2.71	5.962
007	05012-00814	PIN STRAIGHT	1				0.006	0.0132
008	01173-51025	BOLT	8				0.021	0.0462
008	15261-91190	BOLT	8	>=1001			0.03	0.066
009	04512-50100	WASHER SPRING	8				0	0

silverhorn.co.uk

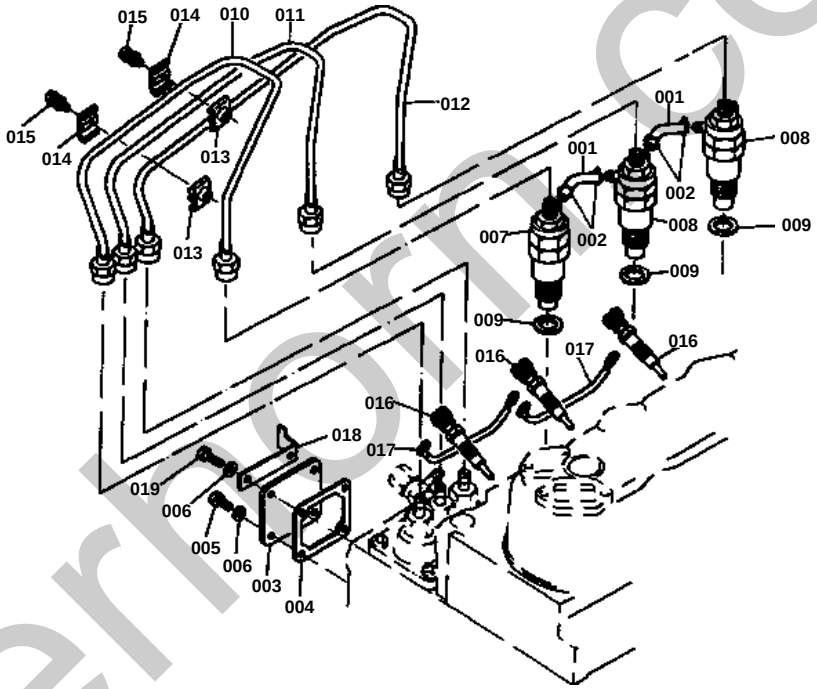

silverfort.co.uk

NOZZLE HOLDER GROUP

↔ Interchangeable; ≠ not interchangeable; ← new for old; → old for new

REF.No	Part No.	Description	Q'ty	S.No.	I/C	REMARKS	Weight (kgf)	Weight (lb)
001	15261-42510	PIPE FUEL OVER FLOW	2				0.004	0.0088
002	15271-42710	CLIP PIPE	4				0	0
002	14971-42750	CLIP PIPE	4	>=1001			0.001	0.0022
003	15241-51650	COVER INJECTION PUMP	1				0.082	0.1804
004	15231-05130	GASKET BREATHER	1				0	0
005	01053-50614	BOLT	2				0.005	0.011
006	04512-50060	WASHER SPRING	4				0	0
007	15271-53000	ASSY HOLDER NOZZLE 1	1				0.26	0.572
008	15271-53020	ASSY HOLDER NOZZLE 2	2				0.26	0.572
009	17011-53620	GASKET	3				0.003	0.0066
010	15261-53710	PIPE INJECTION 1	1				0.103	0.2266
011	15261-53720	PIPE INJECTION 2	1				0.1	0.22
012	15381-53730	PIPE INJECTION 3	1				0.102	0.2244
013	15121-53850	CLAMP PIPE 1	2				0	0
014	15121-53860	CLAMP PIPE 1	2				0	0
015	03024-50520	SCREW WITH WASHER	2				0.004	0.0088
016	15261-65510	GLOW PLUG	3				0.03	0.066
017	15261-65560	CODE GLOW PLUG	2				0.005	0.011
018	66711-43290	BRACKET	1				0.039	0.0858
019	01053-50616	BOLT	2				0.005	0.011

silverhorn.co.uk

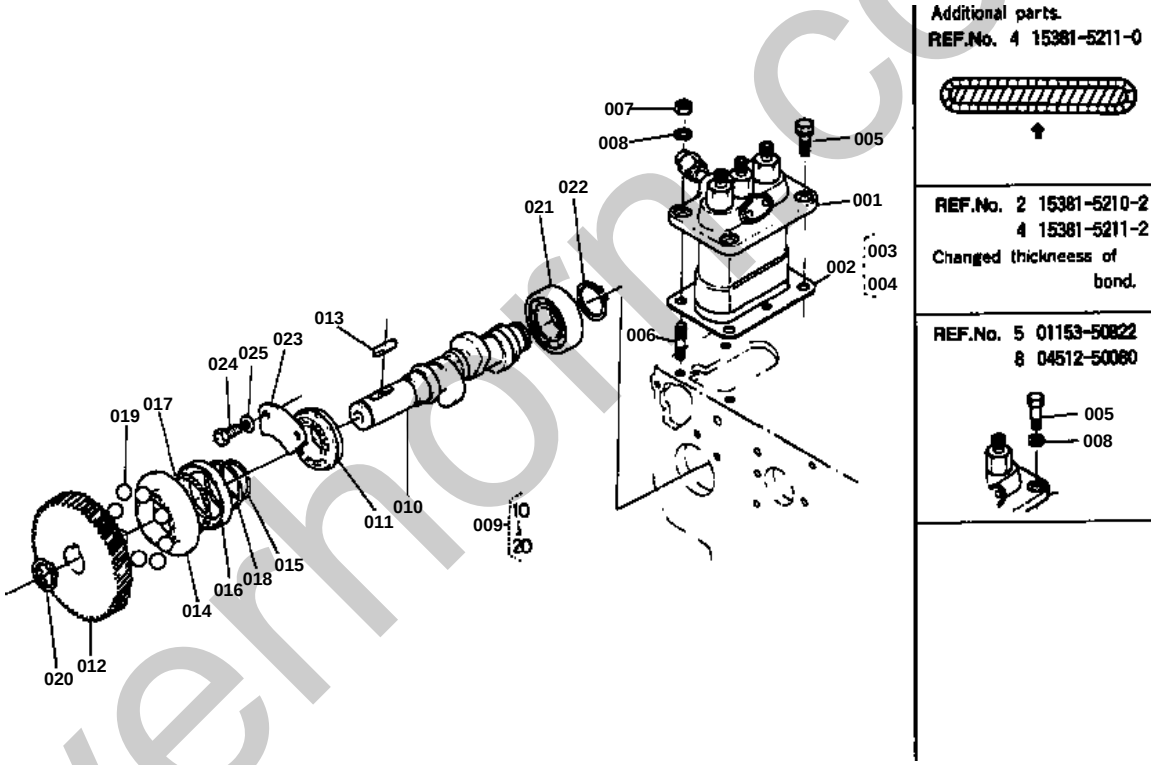

silverhorn.co.uk

↔ Interchangeable; ≠ not interchangeable; ← new for old; → old for new

REF.No	Part No.	Description	Q'ty	S.No.	I/C	REMARKS	Weight (kgf)	Weight (lb)
001	15381-51010	PUMP INJECTION	1				2.16	4.752
002	15381-52100	ASSY SHIM INJEC.PUMP	1	>=1401		REF.No.003 004	0.022	0.0484
002	15381-52102	ASSY SHIM INJEC.PUMP	1	>=3401		REF.No.003 004	0	0
003	15321-52110	SHIM INJECTION PUMP	5	<=1400			0	0
003	15321-52110	SHIM INJECTION PUMP	2	>=1401			0	0
004	15381-52110	SHIM INJECTION PUMP	3	>=1401			0	0
004	15381-52112	SHIM INJECTION PUMP	3	>=3401			0.045	0.099
005	01153-50822	BOLT	2				0.011	0.0242
005	01123-50822	BOLT	2				0.012	0.0264
006	01513-50822	STUD	2				0.01	0.022
006	15221-91530	STUD	2	>=1001			0.011	0.0242
007	02156-50080	NUT	2				0.004	0.0088
008	04512-50080	WASHER SPRING	4				0	0
008	04512-50080	WASHER SPRING	2				0	0
009	15381-16020	CAMSHAFT FUEL	1			REF.No.010 TO 020	1.1	2.42
010	15381-16170	CAMSHAFT FUEL	1				0.42	0.924
011	08153-06004	BEARING BALL	1				0.07	0.154
012	15261-51150	GEAR INJECTION PUMP	1				0.463	1.0186
013	05712-00520	KEY FEATHER	1				0.004	0.0088
014	15261-55450	SLEEVE GOVERNOR	1				0.058	0.1276
015	15261-55470	CIR-CLIP	1				0.002	0.0044
016	15261-55690	CASE GOVERNOR BALL	1				0	0
017	07715-03205	BALL	30				0.001	0.0022
018	15261-55740	CIR-CLIP	1				0.002	0.0044
019	07715-03217	BALL	8				0.01	0.022
020	04612-00180	CIR-CLIP EXTERNAL	1				0.001	0.0022
021	08103-06004	BEARING BALL	1				0.066	0.1452
022	04612-00200	CIR-CLIP EXTERNAL	1				0.001	0.0022
023	15261-16320	STOPPER FUEL CAM.	1				0.037	0.0814
024	01053-50612	BOLT	2				0.004	0.0088
025	04512-50060	WASHER SPRING	2				0	0

silverhorn.co.uk

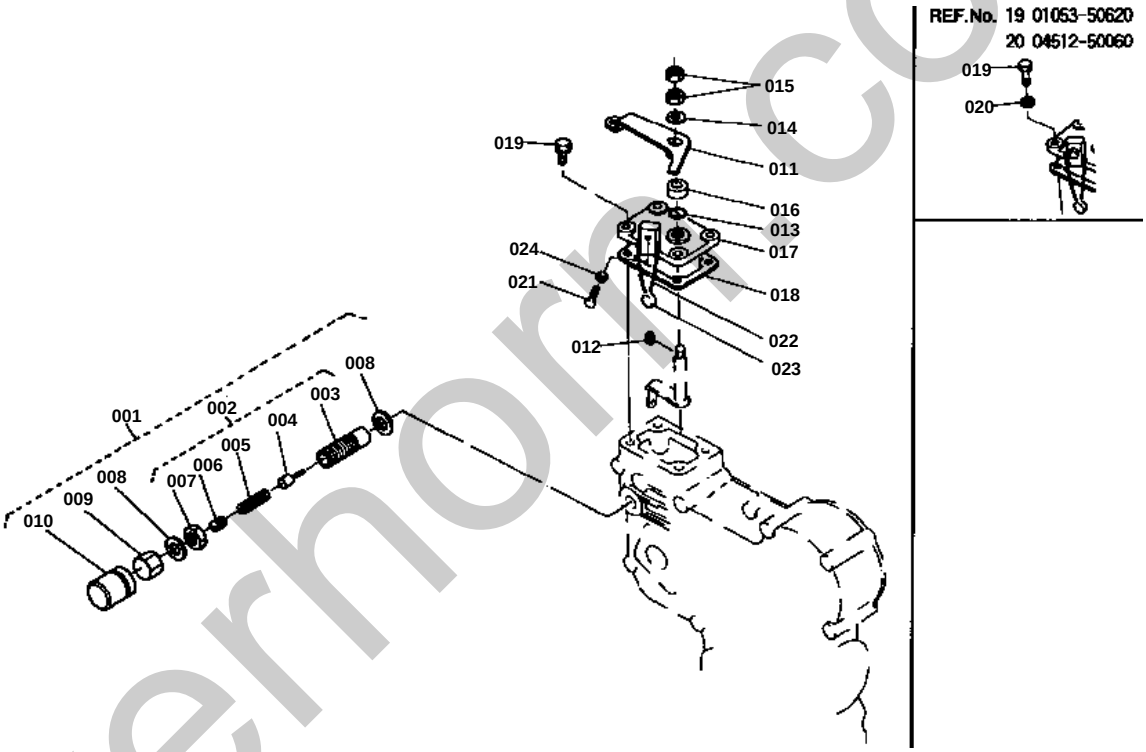

silverhorn.co.uk

SPEED CONTROL PLATE GROUP

↔ Interchangeable; ≠ not interchangeable; ← new for old; → old for new

REF.No	Part No.	Description	Q'ty	S.No.	I/C	REMARKS	Weight (kgf)	Weight (lb)
001	15371-54020	ASSY APPARA.F-LIMIT	1			REF.No.002 008 TO 010	0.055	0.121
002	15371-54030	ASSY APPARA.F-LIMIT	1			REF.No.003 TO 007	0.031	0.0682
003	99999-99999	BLANK	0			ORDER BY REF.No.002	0	0
004	99999-99999	BLANK	0			ORDER BY REF.No.002	0	0
005	15371-54230	SPRING	1				0.002	0.0044
006	14301-54430	SCREW SET	1				0.001	0.0022
007	15261-54370	NUT LOCK	1				0.007	0.0154
008	15109-33660	GASKET	2				0.001	0.0022
009	15261-54220	NUT CAP	1				0.02	0.044
010	14301-54420	CAP	1				0.005	0.011
011	15371-57150	LEVER SPEED CONTROL	1				0.035	0.077
012	15261-95010	KEY FEATHER	1				0.001	0.0022
013	04811-00070	O RING	1				0.001	0.0022
014	04013-50060	WASHER PLAIN	1				0	0
015	02012-50060	NUT	2				0	0
016	15261-57380	PLATE COMPRESSION	1				0	0
017	15261-57110	PLATE SPEED CONTROL	1				0.06	0.132
018	15261-57210	GASKET CONTROL PLATE	1				0	0
019	01053-50620	BOLT	4				0.006	0.0132
019	01023-50620	BOLT	4				0.006	0.0132
020	04512-50060	WASHER SPRING	4				0	0
021	99999-99999	BLANK	0			NON SALE	0	0
022	99999-99999	BLANK	0			NON SALE	0	0
023	99999-99999	BLANK	0			NON SALE	0	0
024	99999-99999	BLANK	0			NON SALE	0	0

silverhorn.co.uk

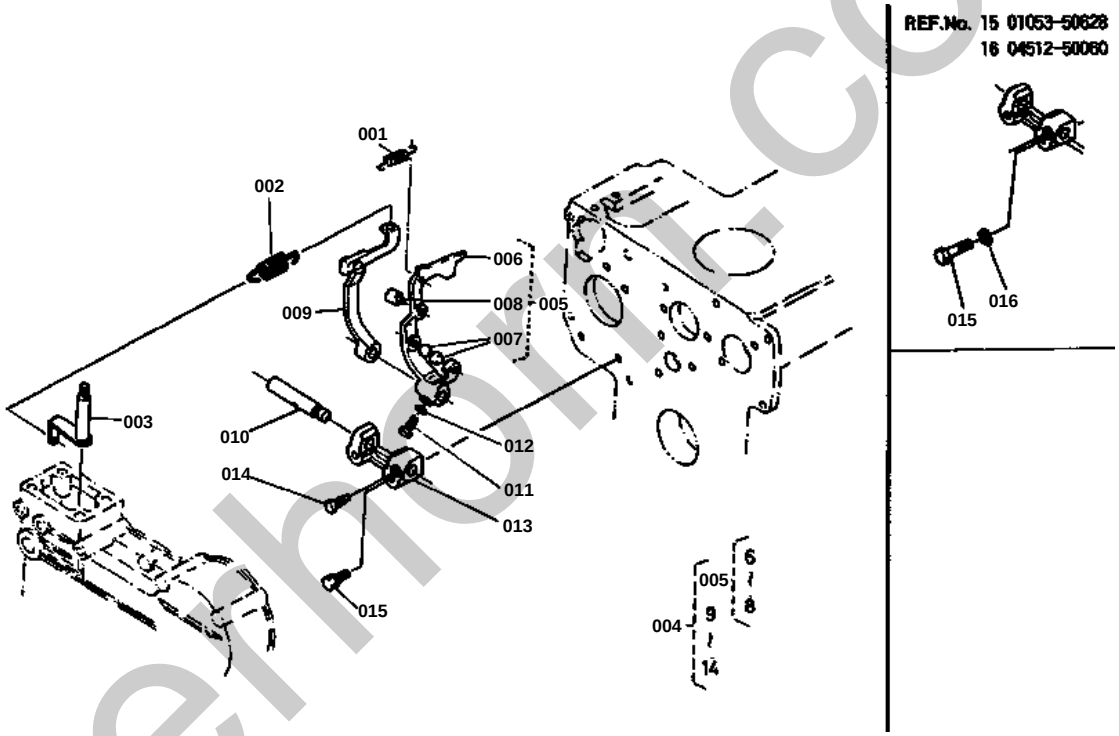

silverhorn.co.uk

GOVERNOR GROUP

↔ Interchangeable; ≠ not interchangeable; ← new for old; → old for new

REF.No	Part No.	Description	Q'ty	S.No.	I/C	REMARKS	Weight (kgf)	Weight (lb)
001	15221-56480	SPRING START	1				0.008	0.0176
002	15371-56410	SPRING GOVERNOR	1				0.006	0.0132
003	15261-56020	LEVER GOVERNOR	1				0.026	0.0572
004	15381-56050	ASSY LEVER FORK	1			REF.No.005 009 TO 014	0.254	0.5588
005	15381-56040	ASSY LEVER FORK 1	1			REF.No.006 TO 008	0.114	0.2508
006	99999-99999	BLANK	0			ORDER BY REF.No.005	0	0
007	99999-99999	BLANK	0			ORDER BY REF.No.005	0	0
008	99999-99999	BLANK	0			ORDER BY REF.No.005	0	0
009	15261-56130	LEVER FORK 2	1				0.063	0.1386
010	15261-56150	SHAFT FORK	1				0.032	0.0704
011	01053-50516	BOLT	1				0.003	0.0066
012	04512-50050	WASHER SPRING	2				0	0
013	15261-56230	HOLDER FORK LEVER	1				0.038	0.0836
014	15261-66410	BOLT	1				0.003	0.0066
015	01053-50628	BOLT	2				0.008	0.0176
015	01023-50628	BOLT	2				0.015	0.033
016	04512-50060	WASHER SPRING	2				0	0

silverhorn.co.uk

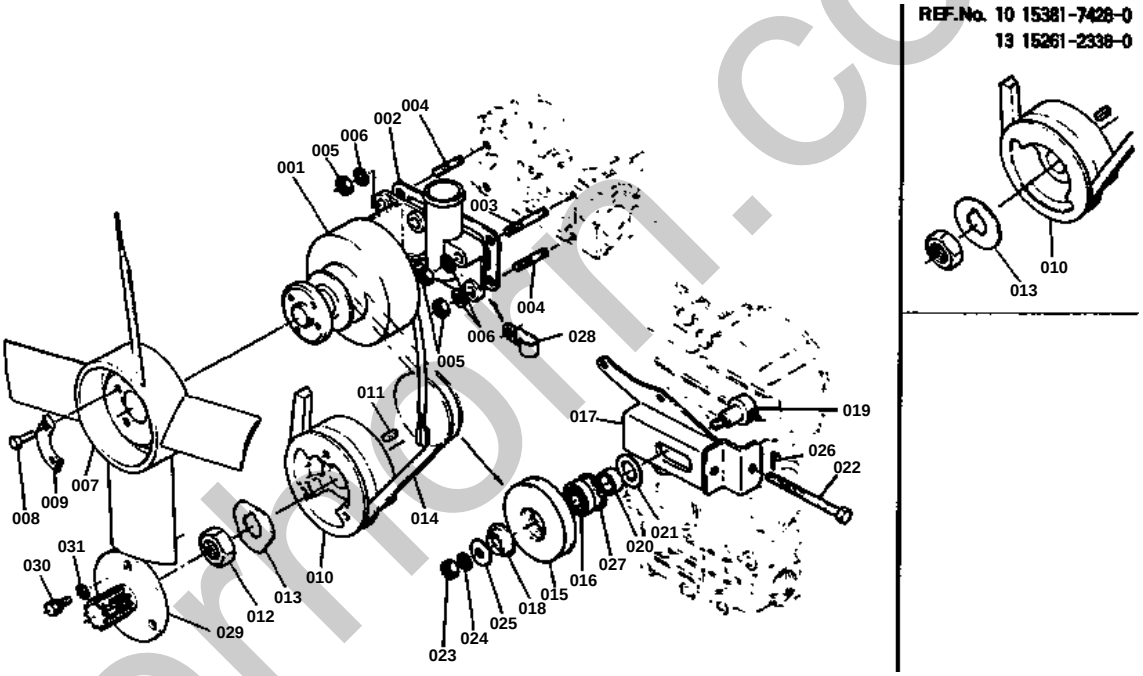

silvermoor.co.uk

DYNAMO GROUP

↔ Interchangeable; ≠ not interchangeable; ← new for old; → old for new

REF.No	Part No.	Description	Q'ty	S.No.	I/C	REMARKS	Weight (kgf)	Weight (lb)
001	15372-64010	DYNAMO	1				1.7	3.74
002	15261-72920	GASKET WATER FLANGE	1				0	0
003	01513-50645	STUD	1				0.011	0.0242
004	01513-50616	STUD	5				0.004	0.0088
005	02056-50060	NUT	6				0.002	0.0044
006	04512-50060	WASHER SPRING	6				0	0
007	15371-74110	FAN	1				0.16	0.352
008	01053-50616	BOLT	4				0.005	0.011
009	15131-74230	WASHER FAN	2				0.005	0.011
010	15381-74280	PULLEY FAN DRIVE	1	<=106168			0.84	1.848
010	15372-74280	PULLEY FAN DRIVE	1	>=106169			0.9	1.98
010	15372-74282	PULLEY FAN DRIVE	1	>=112116			0	0
010	15372-74283	PULLEY FAN DRIVE	1	>=135832			0	0
011	05712-00515	KEY FEATHER	1				0.003	0.0066
012	15261-23360	NUT CRANKSHAFT	1				0.034	0.0748
013	15261-23380	WASHER CRANKSHAFT	1	<=106168			0.009	0.0198
013	15372-23380	WASHER CRANKSHAFT	1	>=106169			0.007	0.0154
014	15231-72530	BELT FAN	1				0.066	0.1452
015	14301-74320	PULLEY TENSION	1				0	0
016	15271-74190	BEARING BALL	1				0.065	0.143
017	15371-74410	SUPP.TENSION PULLEY	1				0.33	0.726
018	15231-74770	COVER TENSION PULLEY	1				0.004	0.0088
019	15231-74330	SHAFT TENSION PULLEY	1				0.093	0.2046
020	15261-74430	COLL.TENSION PULLEY	1				0.013	0.0286
021	14301-74780	COVER TENSION PULLEY	1				0.005	0.011
022	15371-74970	BOLT TENSION	1				0.032	0.0704
023	02018-50100	NUT	1				0.011	0.0242
024	04512-50100	WASHER SPRING	1				0	0
025	04013-50100	WASHER PLAIN	1				0	0
026	99999-99999	BLANK	0			OBTAINED LOCALLY	0	0
027	04611-00400	CIR-CLIP INTERNAL	1				0.005	0.011
028	15272-67570	CLAMP CORD	1				0.003	0.0066
029	66704-88530	FLANGE PTO	1				0.4	0.88
030	01123-50825	BOLT	3				0.013	0.0286
031	04013-50080	WASHER PLAIN	3				0	0

silvernorn.co.uk

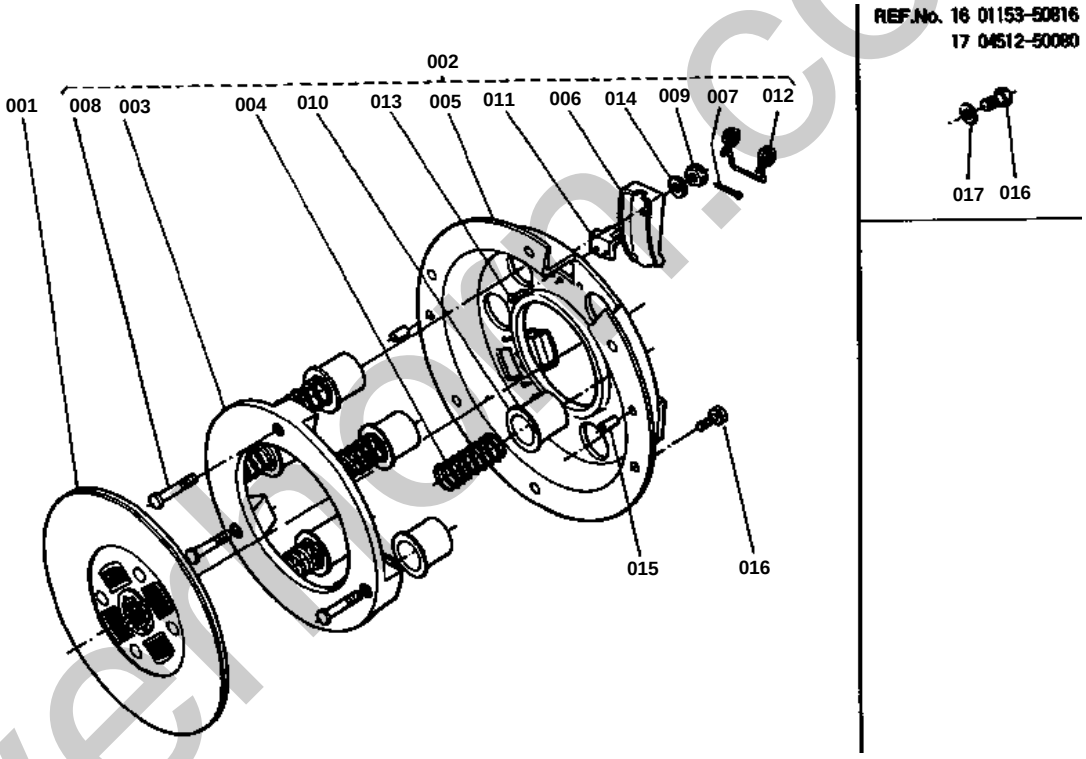

silverson.co.uk

CLUTCH GROUP

↔ Interchangeable; ≠ not interchangeable; ← new for old; → old for new

REF.No	Part No.	Description	Q'ty	S.No.	I/C	REMARKS	Weight (kgf)	Weight (lb)
001	66591-13300	ASSY DISK CLUTCH	1				0.9	1.98
002	66591-13400	ASSY PLATE PRESSURE	1			REF.No.003 TO 014	3.1	6.82
003	99999-99999	BLANK	0			ORDER BY REF.No.002	0	0
004	66591-13310	SPRING PRESSURE	6				0.058	0.1276
005	99999-99999	BLANK	0			ORDER BY REF.No.002	0	0
006	32200-14540	LEVER CLUTCH	3				0.05	0.11
007	32130-14560	PIN SPLIT	3				0.001	0.0022
008	32200-14570	BOLT	3				0.009	0.0198
009	32130-14580	NUT	3				0.003	0.0066
010	32130-14590	CAP PRESSURE SPRING	6				0.024	0.0528
011	32130-14620	SEAT LEVER	3				0.017	0.0374
012	32130-14630	SPRING RETURN	3				0.006	0.0132
013	32130-14640	RIVET	6				0.001	0.0022
014	32130-14650	WASHER RELEASE YOKE	3				0.002	0.0044
015	05012-00614	PIN STRAIGHT	2				0.004	0.0088
016	01153-50816	BOLT	6				0.01	0.022
016	01123-50816	BOLT	6	>=1001			0.011	0.0242
017	04512-50080	WASHER SPRING	6				0	0

silverhorn.co.uk

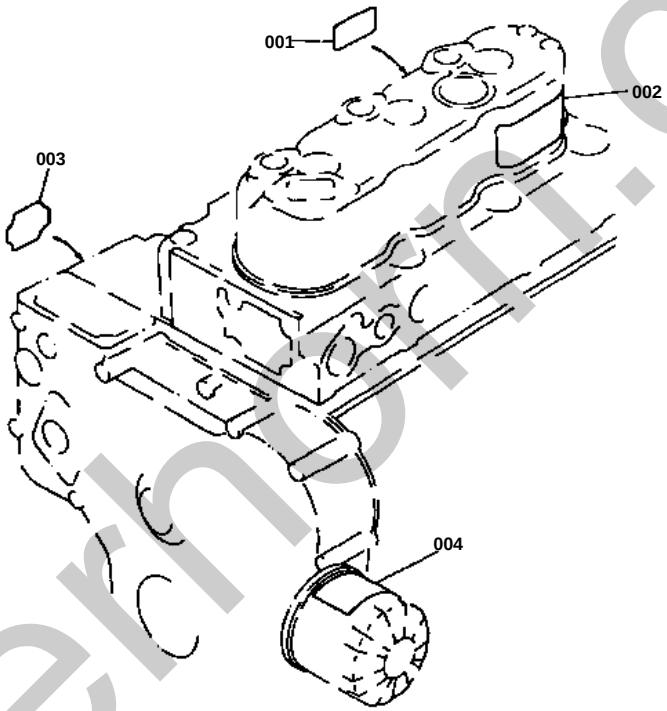

REF.No. 3	
15222-8721-0	15372-8723-0
English	English
×	×
Japanese	French

silverhorn.co.uk

NAME PLATE GROUP

↔ Interchangeable; ≠ not interchangeable; ← new for old; → old for new

REF.No	Part No.	Description	Q'ty	S.No.	I/C	REMARKS	Weight (kgf)	Weight (lb)
001	15232-88210	LABEL GLOW PLUG	1				0.001	0.0022
002	15372-87310	LABEL OIL	1				0.001	0.0022
003	15222-87210	LABEL CAUTION	1	<=2200			0.001	0.0022
003	15372-87230	LABEL CAUTION	1	>=1001			0.001	0.0022
004	15372-87210	LABEL CAUTION	1				0.001	0.0022

silverhorn.co.uk

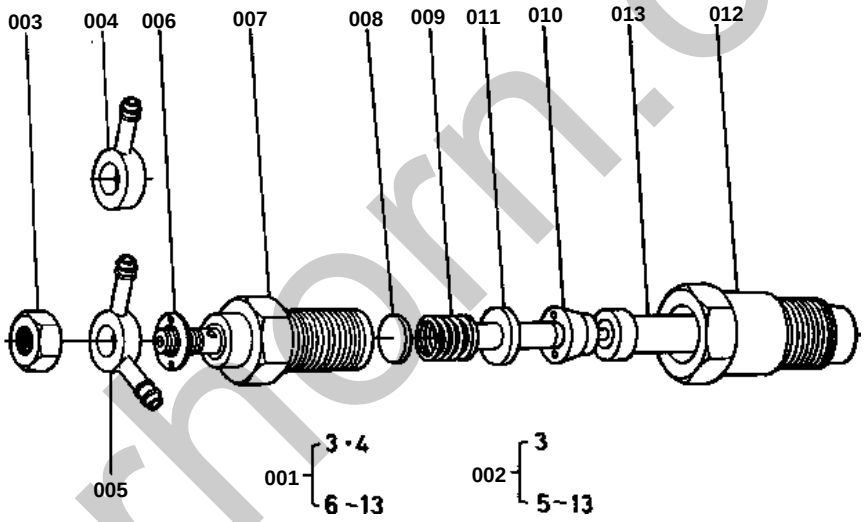

silverhorn.co.uk

NOZZLE HOLDER GROUP

↔ Interchangeable; ≠ not interchangeable; ← new for old; → old for new

REF.No	Part No.	Description	Q'ty	S.No.	I/C	REMARKS	Weight (kgf)	Weight (lb)
001	15271-53000	ASSY HOLDER NOZZLE 1	1			REF.No.003 004 006 TO 013	0.26	0.572
002	15271-53020	ASSY HOLDER NOZZLE 2	2			REF.No.003 005 TO 013	0.26	0.572
003	15221-92020	NUT	3				0.011	0.0242
004	15221-95680	JOINT EYE 1	1				0.021	0.0462
005	15221-95690	JOINT EYE 2	2				0.022	0.0484
006	15221-94020	WASHER PLAIN	3				0.002	0.0044
007	99999-99999	BLANK	0			ORDER BY REF.No.001 OR 002	0	0
008	15221-53230	WASHER ADJUSTING	3				0.001	0.0022
009	15221-53170	SPRING NOZZLE	3				0.01	0.022
010	15221-53350	PIECE DISTANCE	3				0.016	0.0352
011	15221-53160	ROD PUSH	3				0.003	0.0066
012	15221-53280	NUT NOZZLE	3				0.068	0.1496
013	15021-53610	PIECE NOZZLE	3				0	0

silverhorn.co.uk

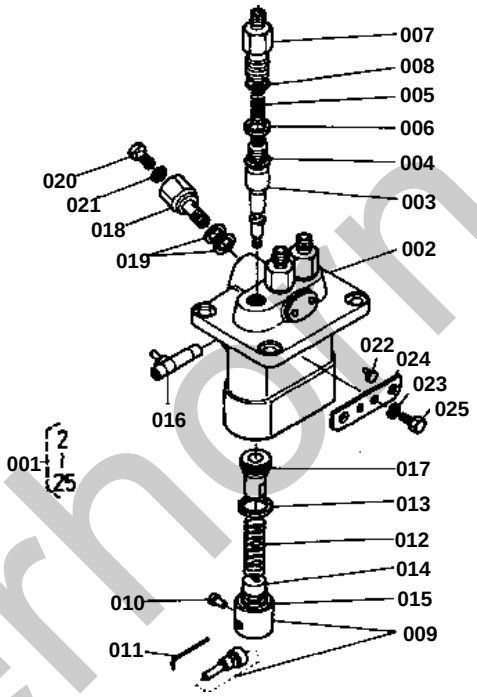

silverhorn.co.uk

↔ Interchangeable; ≠ not interchangeable; ← new for old; → old for new

REF.No	Part No.	Description	Q'ty	S.No.	I/C	REMARKS	Weight (kgf)	Weight (lb)
001	15381-51010	ASSY PUMP INJECTION	1			REF.No.002 TO 025	2.16	4.752
002	99999-99999	BLANK	0			ORDER BY REF.No.001	0	0
003	15261-51050	ELEMENT PUMP	3				0.04	0.088
004	15261-51030	VALVE DELIVERY VALVE	3				0.011	0.0242
005	15331-51230	SPRING DELIVE.VALVE	3				0.001	0.0022
006	15331-51240	GASKET DELIVE.VALVE	3				0.001	0.0022
007	15331-51220	HOLDER DELIVE.VALVE	3				0.053	0.1166
008	15331-96760	O RING	3				0.001	0.0022
009	15331-51070	ASSY TAPPET	3				0.036	0.0792
010	15331-51250	PIN TAPPET GUIDE	3				0.001	0.0022
011	15331-51430	PIN CLAMP	1				0.001	0.0022
012	15331-51280	SPRING PLUNGER	3				0	0
013	15331-51270	SEAT SPRING UPPER	3				0.001	0.0022
014	15331-51290	SEAT SPRING UNDER	3				0.001	0.0022
015	15381-51490	SHIM	3				0.008	0.0176
016	15331-51060	RACK CONTROL	1				0.036	0.0792
017	15331-51380	SLEEVE CONTROL	3				0.012	0.0264
018	15241-51320	SCREW	1				0.034	0.0748
019	15331-96650	GASKET	2				0.001	0.0022
020	15331-51350	SCREW AIR BREEDER	1				0	0
021	15331-96660	GASKET	1				0.001	0.0022
022	15331-51480	COLLAR	2				0.005	0.011
023	15381-94090	WASHER SPRING	2				0.002	0.0044
024	15381-51390	PLATE ADJUSTING	1				0.008	0.0176
025	15331-91010	BOLT	2				0.034	0.0748

silverhorn.co.uk

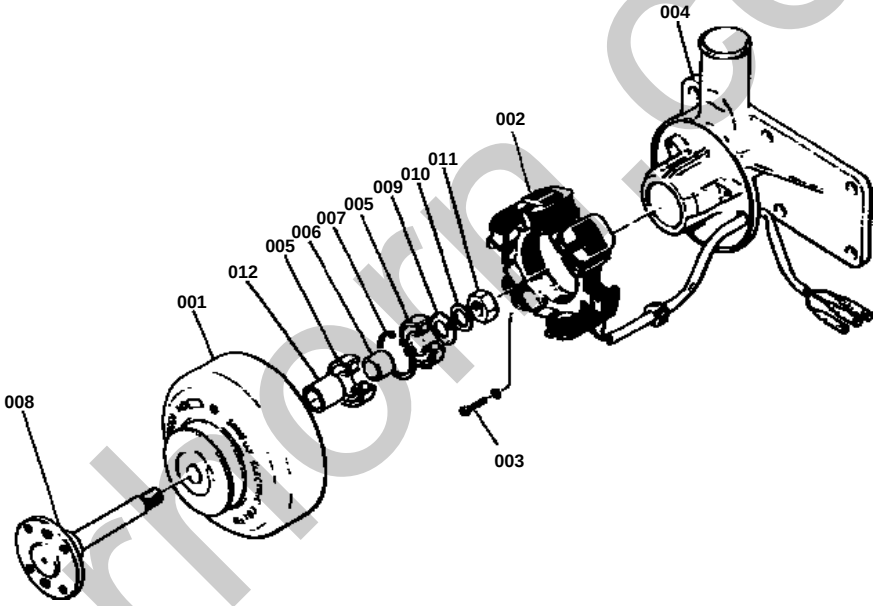

silverhorn.co.uk

↔ Interchangeable; ≠ not interchangeable; ← new for old; → old for new

REF.No	Part No.	Description	Q'ty	S.No.	I/C	REMARKS	Weight (kgf)	Weight (lb)
001	15372-64040	ROTOR	1				0.95	2.09
002	15372-64290	ASSY STATOR	1				0.23	0.506
003	15261-93010	SCREW	2				0.003	0.0066
004	15372-64360	BASE STATOR	1				0	0
005	15531-74180	BEARING BALL	1				0.04	0.088
006	15261-64150	COLLAR	1				0.02	0.044
007	15261-95470	CIR-CLIP INTERNAL	1				0.002	0.0044
008	15372-74140	SHAFT FAN	1				0.22	0.484
009	15261-94020	WASHER PLAIN	1				0.007	0.0154
010	15261-94070	WASHER SPRING	1				0.003	0.0066
011	15261-92030	NUT	1				0.01	0.022
012	15261-64140	COLLAR	1				0.025	0.055

silverhorn.co.uk

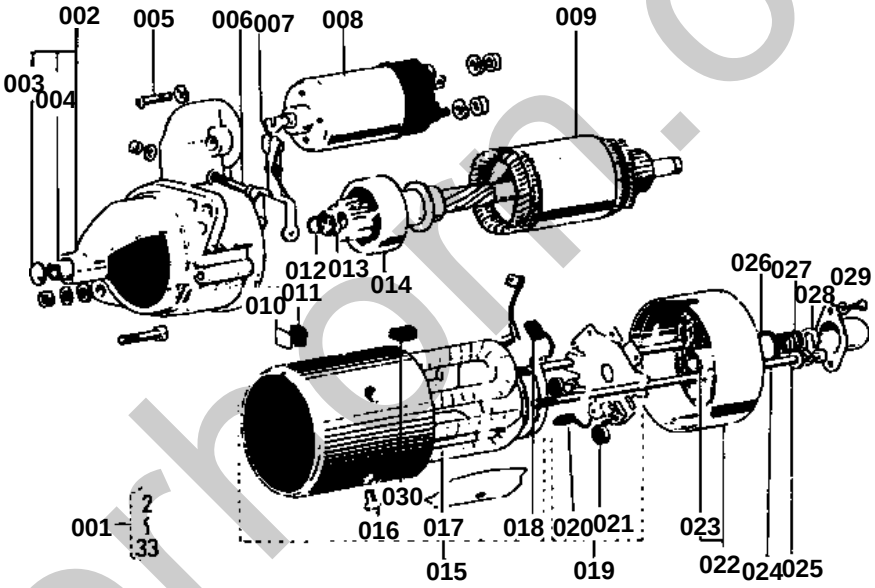

silverhorn.co.uk

↔ Interchangeable; ≠ not interchangeable; ← new for old; → old for new

REF.No	Part No.	Description	Q'ty	S.No.	I/C	REMARKS	Weight (kgf)	Weight (lb)
001	15231-63010	ASSY STARTER	1			REF.No.002 TO 033	0	0
002	15231-63030	DRIVE END FRAME	1				0.45	0.99
003	15231-63220	CAP END FRAME	1				0.001	0.0022
004	17016-63250	BUSH	1				0.006	0.0132
005	15221-91370	SCREW	2				0.01	0.022
006	15221-91020	BOLT	1				0.01	0.022
007	15221-63050	LEVER DRIVE	1				0.044	0.0968
008	15231-63020	MAGNET SWITCH	1				0.692	1.5224
009	15231-63072	ARMATURE	1				1.635	3.597
010	15231-63680	PLATE INSULATOR	1				0.007	0.0154
011	15231-63690	WASHER INSULATOR	1				0.004	0.0088
012	15221-94820	CIR-CLIP EXTERNAL	1				0.001	0.0022
013	15321-63250	COLLAR	1				0.005	0.011
014	15231-63040	CLUTCH	1				0.28	0.616
015	15231-63080	YOKE	1				1.8	3.96
016	15221-91380	SCREW	4				0.008	0.0176
017	15221-63092	COIL FIELD	1				0.3	0.66
018	15221-63370	BRUSH	1				0.006	0.0132
019	15221-63380	HOLDER BRUSH	1				0.13	0.286
020	15221-63360	BRUSH	1				0.006	0.0132
021	15221-63390	SPRING BRUSH	2				0.003	0.0066
022	15221-63200	END FRAME	1				0.254	0.5588
023	15221-63250	BUSH	1				0.006	0.0132
024	15221-63320	BOLT THROUGH	2				0.017	0.0374
025	15231-94030	WASHER PLAIN	2				0.002	0.0044
026	15221-63520	PACKING	1				0.005	0.011
027	15221-63490	SPRING RETURN	1				0.004	0.0088
028	15221-94030	HOLDER SPRING	1				0.003	0.0066
029	15221-63510	CAP END FRAME	1				0.01	0.022
030	15221-96680	BUSH INSULATOR	1				0.002	0.0044
031	15231-94040	WASHER PLAIN	1			NOT SHOWN IN FIG.	0.002	0.0044
032	15321-94010	WASHER PLAIN	1			NOT SHOWN IN FIG.	0.001	0.0022
033	15231-94040	WASHER PLAIN	1			NOT SHOWN IN FIG.	0.002	0.0044

silvermorn.co.uk

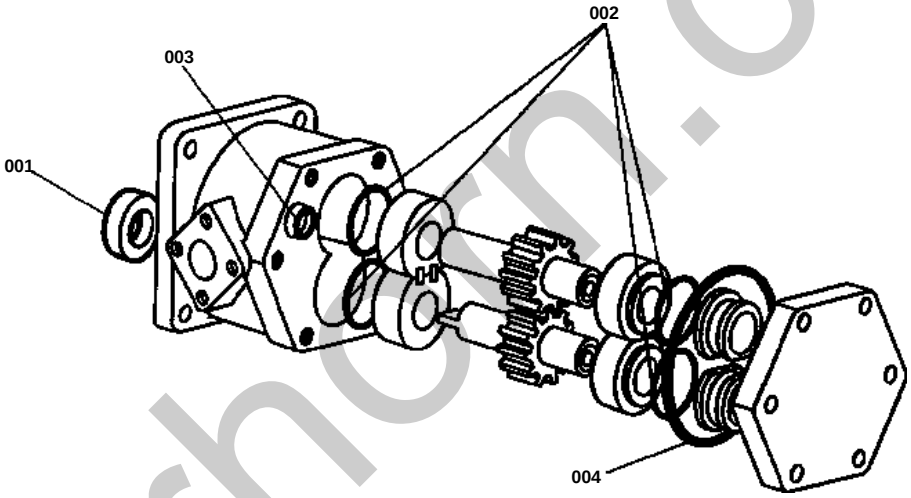

silverhorn.co.uk

↔ Interchangeable; ≠ not interchangeable; ← new for old; → old for new

REF.No	Part No.	Description	Q'ty	S.No.	I/C	REMARKS	Weight (kgf)	Weight (lb)
001	67211-76190	SEAL OIL	1				0	0
002	04810-00220	O RING	4				0.001	0.0022
003	04810-00050	O RING	1				0.001	0.0022
004	04810-50500	O RING	1				0.005	0.011

silverhorn.co.uk

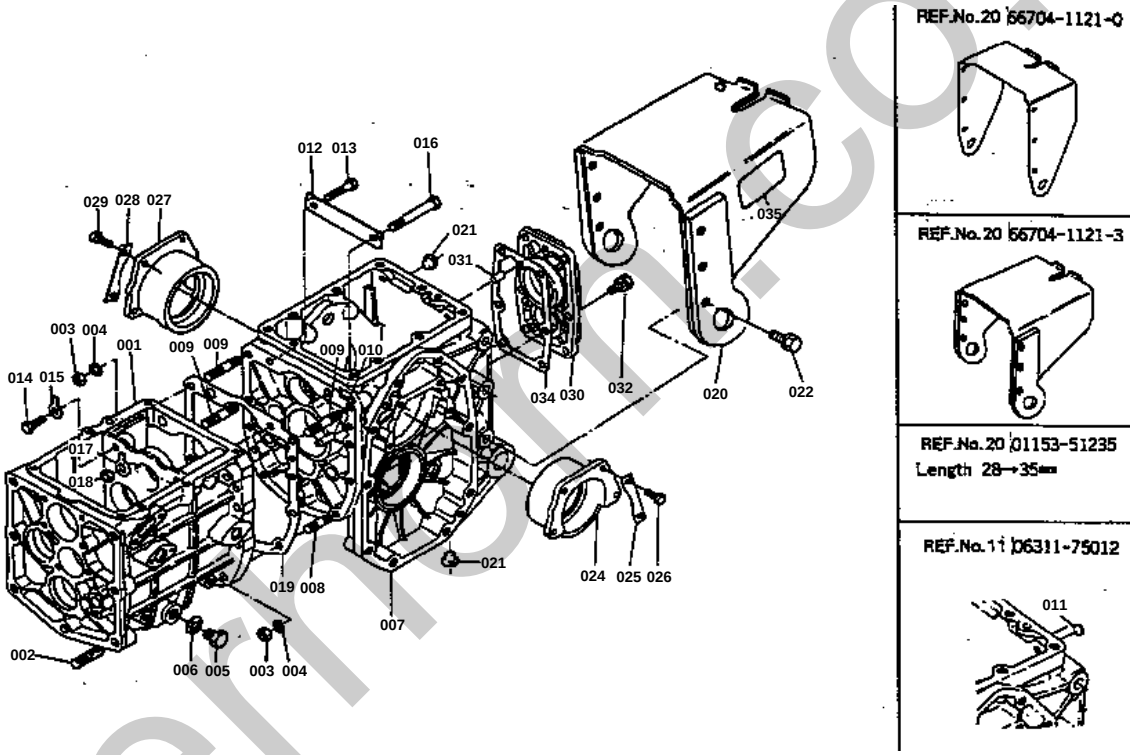

silvermoon.co.uk

↔ Interchangeable; ≠ not interchangeable; ← new for old; → old for new

REF.No	Part No.	Description	Q'ty	S.No.	I/C	REMARKS	Weight (kgf)	Weight (lb)
001	66611-11110	CASE TRANSMISSION	1				0	0
002	01555-51225	STUD	7				0.039	0.0858
003	02118-50100	NUT	9				0.005	0.011
004	04512-50100	WASHER SPRING	9				0	0
005	06331-35016	PLUG	1				0.04	0.088
006	04717-01600	WASHER SEAL	1				0.003	0.0066
007	66611-11127	CASE DIFFERENTIAL	1	<=17444			8	17.6
007	66611-11129	CASE DIFFERENTIAL	1	>=10001			0	0
008	01555-51035	STUD	6				0.029	0.0638
009	01555-51050	STUD	3				0.038	0.0836
010	66611-11160	PIN KNOCK	2				0.01	0.022
011	06311-75012	PLUG EXPANSION	2	<=17444			0.002	0.0044
012	66591-11440	PLATE LOCK	1				0.014	0.0308
013	01153-50838	BOLT	1				0.017	0.0374
014	01153-50825	BOLT	1				0.012	0.0264
015	04111-50080	WASHER TONGUED	1				0.001	0.0022
016	66611-11140	BOLT	1				0	0
017	04111-50100	WASHER TONGUED	1				0.003	0.0066
018	02118-50100	NUT	1				0.005	0.011
019	66611-11130	GASKET	1				0	0
020	66704-11210	COVER PTO	1	<=10901			2.3	5.06
020	66704-11213	COVER PTO	1	<=11600			0	0
020	66704-11214	COVER PTO	1	>=10001			1.5	3.3
021	66591-11290	PLUG 2	4				0.001	0.0022
021	67111-11140	PLUG M12	4	>=10001			0	0
021	67211-11140	PLUG M12	4	>=10001			0.001	0.0022
022	01153-51228	BOLT	6	<=11600		OLD	0.034	0.0748
022	01153-51235	BOLT	6			OLD	0.039	0.0858
022	01123-51235	BOLT	6			NEW	0.041	0.0902
023	04512-50120	WASHER SPRING	6			WITH REF.No.022 OLD	0	0
024	66611-11510	HOLDER DIFF.BRG.LH	1				0.78	1.716
025	66611-11520	PLATE LOCK	2				0.01	0.022
026	01150-50820	BOLT	4				0.011	0.0242
027	66611-11812	HOLDER DIFF BRG.RH	1				0.72	1.584
028	66611-11520	PLATE LOCK	2				0.01	0.022
029	01150-50820	BOLT	4				0.011	0.0242
030	66611-12216	COVER REAR	1	<=11600			1.02	2.244
030	66706-12210	COVER REAR	1	>=11601			1.21	2.662
031	05012-00816	PIN STRAIGHT	1				0.007	0.0154
032	01150-51025	BOLT	6			OLD	0	0
032	01120-51025	BOLT	6			NEW	0	0
033	04512-50100	WASHER SPRING	6			WITH REF.No.032 OLD	0	0
034	66611-12220	GASKET	1				0	0
035	35110-21990	LABEL	1	>=11601			0.001	0.0022

silvermorn.co.uk

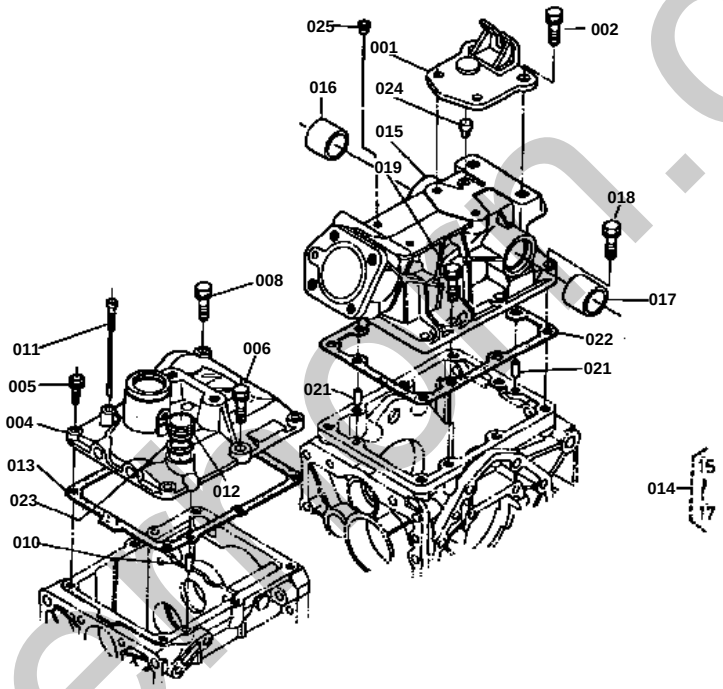

REF.No. 2 01123-51230
6 01123-51035
8 01120-50845
18 01123-51045
19 01123-51035
Bolt with washer.
REF.No. 3 04512-50120
7 04512-50100
9 04512-50080
20 04512-50100
Discontinuance.

silverson.co.uk

CASE COVER GROUP

↔ Interchangeable; ≠ not interchangeable; ← new for old; → old for new

REF.No	Part No.	Description	Q'ty	S.No.	I/C	REMARKS	Weight (kgf)	Weight (lb)
001	66611-11910	BRACKET CHAIN	1				0.607	1.3354
002	01153-51230	BOLT	2			OLD	0.036	0.0792
002	01123-51230	BOLT	2			NEW	0.04	0.088
003	04512-50120	WASHER SPRING	2			WITH REF.No.002 OLD	0	0
004	66591-11138	COVER CASE FRONT	1				0.948	2.0856
005	01120-50828	BOLT	3				0	0
006	01153-51035	BOLT	2			OLD	0.025	0.055
006	01123-51035	BOLT	2			NEW	0.025	0.055
007	04512-50100	WASHER SPRING	2			WITH REF.No.006 OLD	0	0
008	01150-50845	BOLT	1			OLD	0.019	0.0418
008	01120-50845	BOLT	1			NEW	0.02	0.044
009	04512-50080	WASHER SPRING	1			WITH REF.No.008 OLD	0	0
010	05012-00816	PIN STRAIGHT	2				0.007	0.0154
011	66591-11380	GAUGE OIL	1				0.01	0.022
012	66591-11460	CAP	1				0.016	0.0352
013	66591-11220	GASKET	1				0	0
014	66711-12500	ASSY COVER CASE REAR	1			REF.No.015 TO 017	0	0
015	66611-12510	COVER CASE REAR	1				3.83	8.426
016	66591-36710	BUSH	1				0.049	0.1078
017	66591-36720	BUSH	1				0.044	0.0968
018	01153-51040	BOLT	3			OLD	0.03	0.066
018	01123-51040	BOLT	3			NEW	0.03	0.066
019	01153-51035	BOLT	6			OLD	0.025	0.055
019	01123-51035	BOLT	6			NEW	0.025	0.055
020	04512-50100	WASHER SPRING	9			WITH REF.No.018/019 OLD	0	0
021	05012-00816	PIN STRAIGHT	2				0.007	0.0154
022	66611-12520	GASKET	1				0	0
023	04711-00400	GASKET	1				0.001	0.0022
023	04713-00400	GASKET	1	>=10001			0.001	0.0022
024	66591-11350	BREATHER	1				0.002	0.0044
025	66591-54390	PLUG 3	2				0.001	0.0022

silvermorn.co.uk

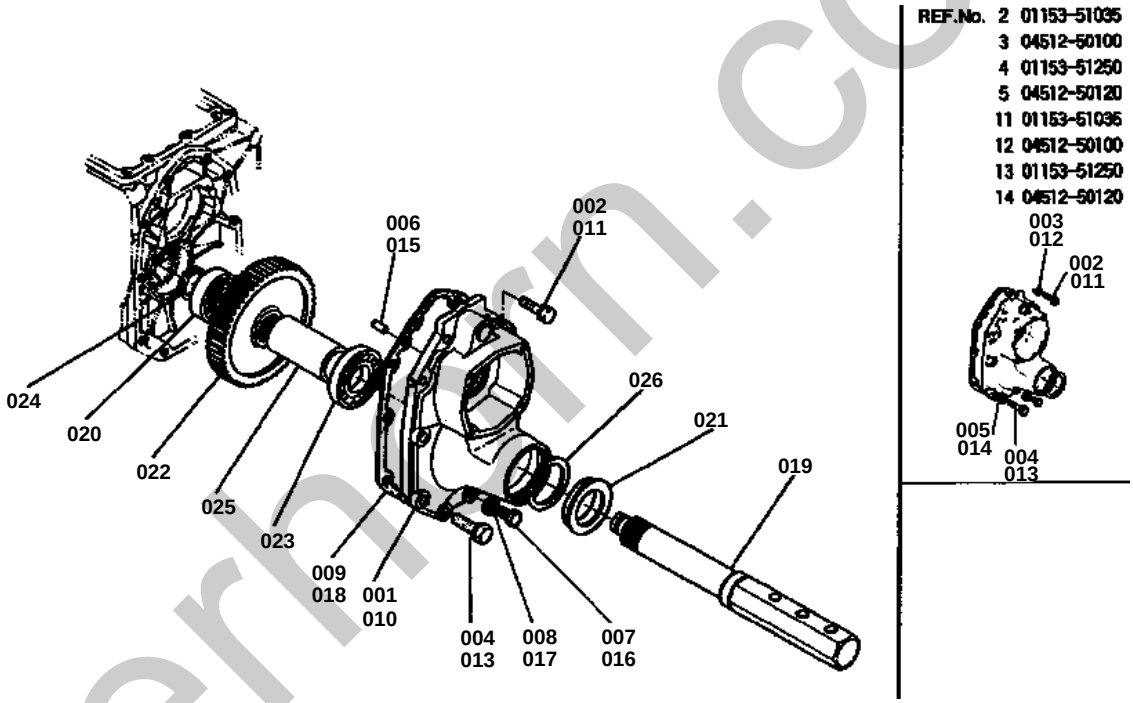

silverhorn.co.uk

AXLE CASE GROUP

↔ Interchangeable; ≠ not interchangeable; ← new for old; → old for new

REF.No	Part No.	Description	Q'ty	S.No.	I/C	REMARKS	Weight (kgf)	Weight (lb)
001	66611-12614	CASE AXLE LH	1				0	0
002	01153-51035	BOLT	4				0.025	0.055
002	01123-51035	BOLT	4				0.025	0.055
003	04512-50100	WASHER SPRING	4				0	0
004	01153-51250	BOLT	6				0.05	0.11
004	01123-51250	BOLT	6				0.055	0.121
005	04512-50120	WASHER SPRING	6				0	0
006	05012-00816	PIN STRAIGHT	2				0.007	0.0154
007	06331-35012	PLUG	1				0.022	0.0484
008	04717-01200	WASHER SEAL	1				0.002	0.0044
009	66591-11240	GASKET	1				0	0
010	66611-12710	CASE AXLE RH	1				2	4.4
011	01153-51035	BOLT	4				0.025	0.055
011	01123-51035	BOLT	4				0.025	0.055
012	04512-50100	WASHER SPRING	4				0	0
013	01153-51250	BOLT	6				0.05	0.11
013	01123-51250	BOLT	6				0.055	0.121
014	04512-50120	WASHER SPRING	6				0	0
015	05012-00816	PIN STRAIGHT	2				0.007	0.0154
016	06331-35012	PLUG	1				0.022	0.0484
017	04717-01200	WASHER SEAL	1				0.002	0.0044
018	66591-11240	GASKET	1				0	0
019	66611-17114	AXLE REAR	2				4.64	10.208
020	08101-06306	BEARING BALL(6306)	2				0.335	0.737
021	66611-17120	SEAL OIL	2			EXCEPT IRAN	0.09	0.198
022	66611-17130	GEAE SPUR 55	2				2.4	5.28
023	08101-06208	BEARING BALL(6208)	2				0.355	0.781
024	04612-00300	CIR-CLIP EXTERNAL	2				0.003	0.0066
025	66611-17143	COLLAR	2				0.515	1.133
026	04611-00800	CIR-CLLP INTERNAL	2				0.02	0.044

silverhorn.co.uk

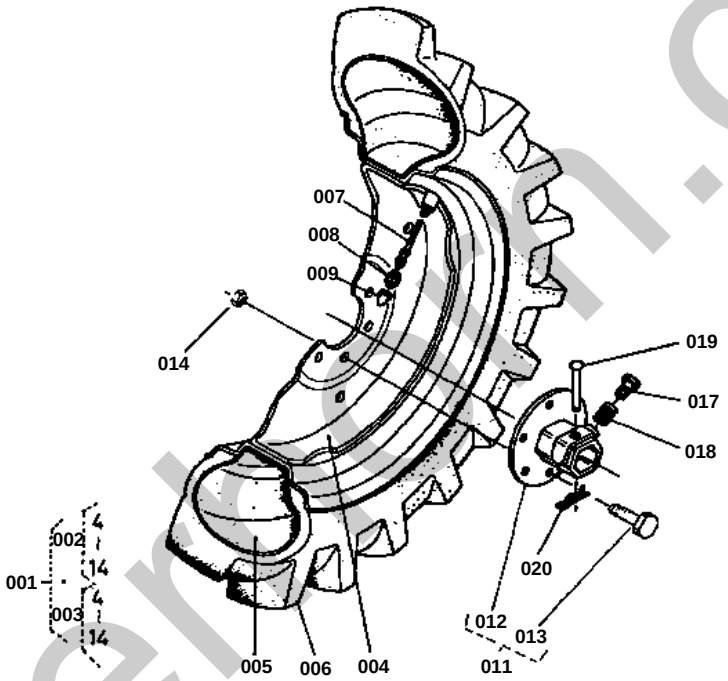

REF.No. 13 01073-51435
14 02076-50140
15 04512-50140
16 04013-50140

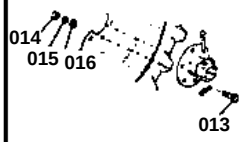

silverhill.co.uk

↔ Interchangeable; ≠ not interchangeable; ← new for old; → old for new

REF.No	Part No.	Description	Q'ty	S.No.	I/C	REMARKS	Weight (kgf)	Weight (lb)
001	99999-99999	BLANK	0			ASSY REAR WHEEL 7-16 REF.No.002 003 OBTA	0	0
002	99999-99999	BLANK	0			ASSY REAR WHEEL LH REF.No.004 TO 014 OBT	0	0
003	99999-99999	BLANK	0			ASSY REAR WHEEL RH REF.No.004 TO 014 OBT	0	0
004	99999-99999	BLANK	0			WHEEL OBTAINED LOCALLY	0	0
005	99999-99999	BLANK	0			TUBE OBTAINED LOCALLY	0	0
006	99999-99999	BLANK	0			TIRE OBTAINED LOCALLY	0	0
007	99999-99999	BLANK	0			ASSY VALVE OBTAINED LOCALLY	0	0
008	99999-99999	BLANK	0			CORE VALVE OBTAINED LOCALLY	0	0
009	99999-99999	BLANK	0			CAP OBTAINED LOCALLY	0	0
010	66704-17100	ASSY HUB WHEEL	2			REF.No.011 TO 015	0	0
010	66704-17200	ASSY HUB WHEEL	2	>=10001		REF.No.011 TO 014	2.95	6.49
011	66704-17300	ASSY WHEEL HUB BOLT	2			REF.No.012 013	0	0
012	66704-17150	HUB WHEEL	2	>=10001			2.6	5.72
013	01073-51435	BOLT	12				0.063	0.1386
013	66704-17310	BOLT	12	>=10001			0	0
014	02076-50140	NUT	12				0.022	0.0484
014	35340-11390	NUT	12	>=10001			0.03	0.066
015	04512-50140	WASHER SPRING	12				0	0
016	04013-50140	WASHER PLAIN	12				0	0
017	63733-17250	BOLT WHEEL HAB SET	2				0.08	0.176
018	63512-17230	SPRING SET BOLT	2				0.014	0.0308
019	66621-17160	PIN AXLE	2				0.05	0.11
020	62131-17290	PIN SNAP	2				0.004	0.0088

silvermorn.co.uk

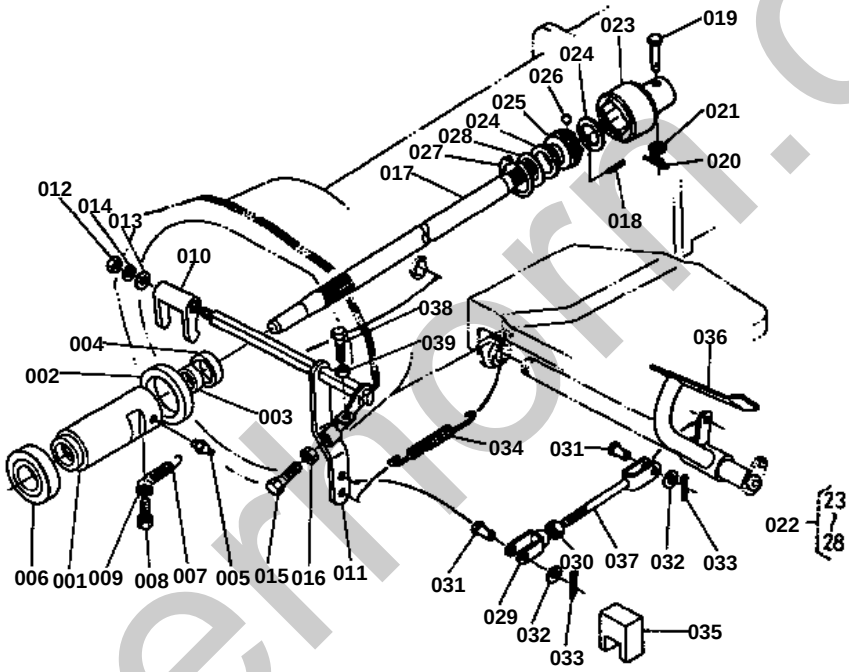

REF.No. 35 66711-4215-0

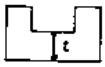

t : 25→45

REF.No. 35 66704-4325-0
Reinforced

silvermorr.co.uk

CLUTCH ROD GROUP

↔ Interchangeable; ≠ not interchangeable; ← new for old; → old for new

REF.No	Part No.	Description	Q'ty	S.No.	I/C	REMARKS	Weight (kgf)	Weight (lb)
001	66621-13314	HOLDER RELEASE BRG.	1				0.63	1.386
002	66621-51420	SEAL OIL	1				0.011	0.0242
003	09030-20328	SEAL OIL	1				0.009	0.0198
004	09030-20357	SEAL OIL	1				0.009	0.0198
005	06613-10675	NIPPLE GREASE	1				0.003	0.0066
006	32150-14820	BEARING THRUST BALL	1				0.2	0.44
007	66611-13340	SRRING RELEASE	1				0.006	0.0132
008	01202-50610	BOLT	1				0.004	0.0088
009	04013-50060	WASHER PLAIN	1				0	0
010	66621-13350	FORK CLUTCH RELEASE	1				0.095	0.209
011	66704-13310	ROD CLUTCH	1				0.42	0.924
012	02114-50080	NUT	1				0.005	0.011
013	04012-50080	WASHER PLAIN	1				0.001	0.0022
014	04512-50080	WASHER SPRING	1				0	0
015	66711-13320	BOLT CLUTCH ADJUST.	1				0.028	0.0616
016	02116-50100	NUT	1				0.004	0.0088
017	66711-14110	SHAFT PROPELLER	1				1.192	2.6224
018	05411-00532	PIN SPRING	1				0.003	0.0066
019	66611-14120	PIN JOINT	1				0	0
020	66611-14130	PIN SET	1				0.001	0.0022
021	04717-00500	WASHER SEAL	1				0.001	0.0022
022	66611-14100	ASSY BALL JOINT	1			REF.No.023 TO 028	0.307	0.6754
023	66611-14140	COUPLING BALL OUTER	1				0.2	0.44
024	66611-14150	GASKET BALL JOINT	2				0	0
025	66611-14160	COUPLING INNER	1				0.076	0.1672
026	07715-00803	BALL	4				0.004	0.0088
027	04611-00350	CIR-CLIP INTERNAL	1				0.003	0.0066
028	66611-14170	RETAINER GASKET	1				0	0
029	66621-43130	U-JOINT	1				0.06	0.132
030	02112-50080	NUT	1				0.003	0.0066
031	05122-50825	PIN JOINT	2				0.011	0.0242
032	04012-50080	WASHER PLAIN	2				0.001	0.0022
033	05511-50215	PIN SPLIT	2				0.001	0.0022
034	66591-43250	SPRING	1			EXCEPT IRAN	0.026	0.0572
034	66704-43250	SPRING	1			EXCEPT IRAN	0.05	0.11
035	66591-43270	SPACER PEDAL	1	<=11400			0.02	0.044
035	66711-42150	SPACER PEDAL	1	>=10001			0.027	0.0594
036	66711-42120	PEDAL CLUTCH	1				0.926	2.0372
037	66711-42110	ROD CLUTCH	1				0.078	0.1716
038	66601-54750	BOLT	1				0.016	0.0352
039	02112-50080	NUT	1				0.003	0.0066

silvermorn.co.uk

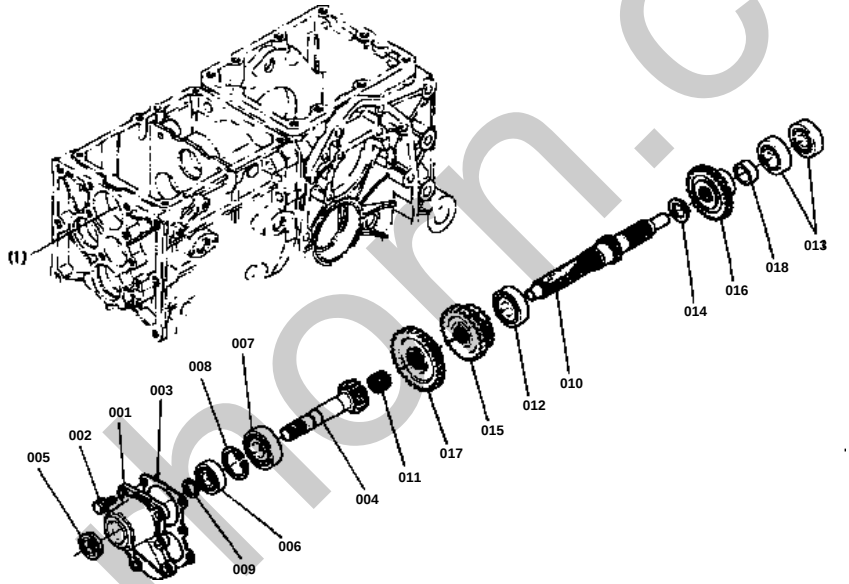

silvermorn.co.uk

1ST SHAFT 4TH SHAFT GROUP

↔ Interchangeable; ≠ not interchangeable; ← new for old; → old for new

REF.No	Part No.	Description	Q'ty	S.No.	I/C	REMARKS	Weight (kgf)	Weight (lb)
001	66591-11170	COVER SHAFT	1				0.268	0.5896
002	01120-50822	BOLT	6				0	0
003	66591-11250	GASKET	1				0	0
004	66591-14115	SHAFT 1	1				0.3	0.66
005	09180-17329	SEAL OIL	1				0.012	0.0264
006	08101-06203	BEARING BALL(6203)	1				0.063	0.1386
007	08101-06304	BEARING BALL(6304)	1				0.146	0.3212
008	04611-00400	CIR-CLIP INTERNAL	1				0.005	0.011
009	04612-00170	CIR-CLIP EXTERNAL	1				0.001	0.0022
010	66751-14410	SHAFT 4	1				0.65	1.43
011	08821-62017	BEARING NEEDLE	1				0.01	0.022
012	08101-06005	BEARING BALL(6005)	1				0.08	0.176
013	08101-06202	BEARING BALL(6202)	2				0.044	0.0968
014	04612-00220	CIR-CLIP EXTERNAL	1				0.001	0.0022
015	66704-14442	GEAR SPUR 17-13	1				0.342	0.7524
016	66751-14450	GEAR SPUR 23	1				0.287	0.6314
017	66704-14460	GEAR SPUR 29	1				0.342	0.7524
018	66611-14470	COLLAR	1				0.019	0.0418

silverhorn.co.uk

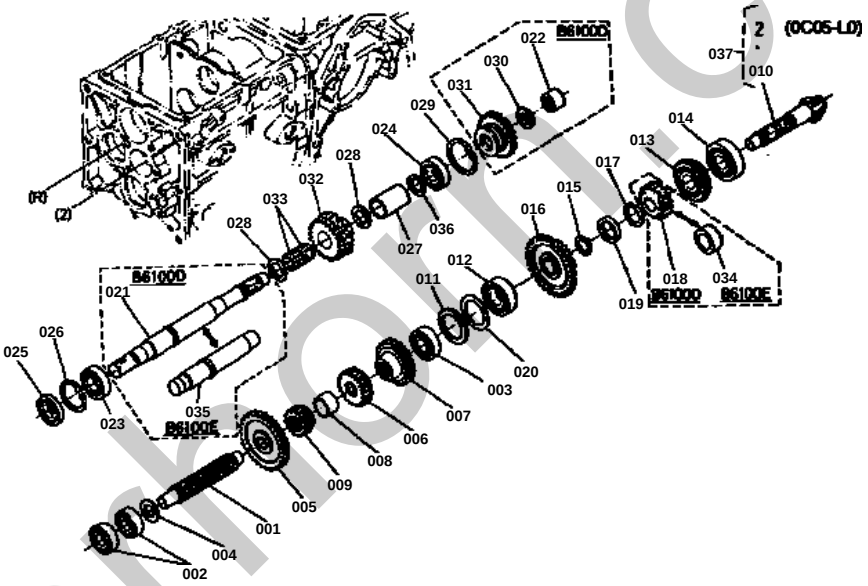

silverhorn.co.uk

2ND SHAFT REVERSE SHAFT GROUP

↔ Interchangeable; ≠ not interchangeable; ← new for old; → old for new

REF.No	Part No.	Description	Q'ty	S.No.	I/C	REMARKS	Weight (kgf)	Weight (lb)
001	66591-14210	SHAFT 2	1				0.36	0.792
002	08101-06203	BEARING BALL	2				0.063	0.1386
002	67211-14220	BEARING BALL	2	>=10001			0.07	0.154
003	08101-06302	BEARING BALL(6302)	1				0.084	0.1848
004	66591-14220	COLLAR	1				0.008	0.0176
005	66704-14210	GEAR SPUR 30	1				0.291	0.6402
006	66704-14242	GEAR SPUR 13	1				0.216	0.4752
007	66704-14272	GEAR SPUR 17	1				0.264	0.5808
008	66591-14270	COLLAR	1				0.032	0.0704
009	66704-14230	GEAR SPUR 13	1				0.104	0.2288
010	99999-99999	BLANK	0			ORDER BY REF.No.037	0	0
011	66591-14720	SPACER	1				0.002	0.0044
012	08221-07204	BEARING BALL(7204B)	1				0	0
013	08151-06305	BEARING BALL	1				0.233	0.5126
013	67211-14620	BEARING BALL	1	>=10001			0.23	0.506
014	08101-06305	BEARING BALL	1				0.23	0.506
014	37230-26740	BEARING BALL	1	>=10001			0	0
015	04612-00250	CIR-CLIP EXTERNAL	1				0.002	0.0044
016	66751-14630	GEAR SPUR 13-31	1				0.428	0.9416
017	66611-14640	COLLAR STOP	2				0.003	0.0066
019	66611-14660	COLLAR	1				0.018	0.0396
020	66611-14670	SHIM 1	1				0.008	0.0176
020	66611-14680	SHIM 2	1				0.01	0.022
020	66611-14690	SHIM 3	1				0.001	0.0022
023	08101-06004	BEARING BALL(6004)	1				0.065	0.143
024	08101-06204	BEARING BALL(6204)	1				0.102	0.2244
025	09500-20428	SEAL OIL	1				0.012	0.0264
026	04611-00420	CIR-CLIP INTERNAL	1				0.006	0.0132
027	66711-14870	COLLAR	1				0	0
028	62231-14520	COLLAR	2				0.005	0.011
029	04611-00470	CIR-CLIP INTERNAL	1				0.006	0.0132
032	66704-14452	GEAR SPUR 15-22	1				0.362	0.7964
033	08822-22617	BEARING NEEDLE	2				0.012	0.0264
034	66681-14650	COLLAR	1				0.055	0.121
035	66681-14813	SHAFT REVERSE	1				0.6	1.32
036	66711-14880	COLLAR	1				0	0
037	66711-82710	ASSY BEVEL GEAR 6-37	1			REF.No.002 ON PAGE L.No.0C05-L0 AND 010	0	0

silvermorn.co.uk

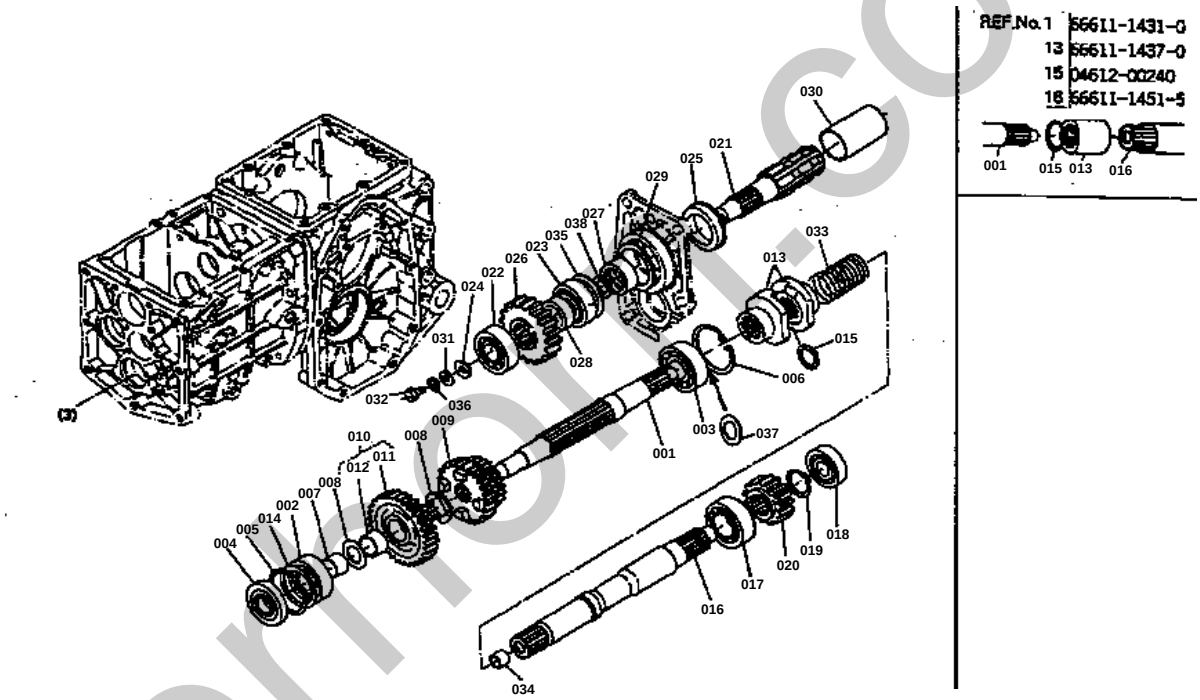

silvermoni.co.uk

3RD 5TH PTO SHAFT GROUP

↔ Interchangeable; ≠ not interchangeable; ← new for old; → old for new

REF.No	Part No.	Description	Q'ty	S.No.	I/C	REMARKS	Weight (kgf)	Weight (lb)
001	66611-14310	SHAFT 3	1	<=11600			0.707	1.5554
001	66706-14310	SHAFT 3	1	>=11601			0.702	1.5444
002	08101-06303	BEARING BALL(6303)	1				0.112	0.2464
003	08101-06205	BEARING BALL(6205)	1				0.14	0.308
004	09500-17478	SEAL OIL	1				0.018	0.0396
005	04611-00470	CIR-CLIP INTERNAL	1				0.006	0.0132
006	04611-00520	CIR-CLIP INTERNAL	1				0.009	0.0198
007	66591-14320	COLLAR	1				0.018	0.0396
008	62231-14770	COLLAR THRUST	2				0	0
009	66704-14852	GEAR 17-13	1				0.39	0.858
010	66704-14400	ASSY GEAR BUSH	1			REF.No.011 012	0.4	0.88
011	99999-99999	BLANK	0			ORDER BY REF.No.010	0	0
012	66611-14340	BUSH	1				0.01	0.022
013	66611-14370	BOSS SPLINE	1	<=11600			0.128	0.2816
013	66706-14380	CAM	2	>=11601			0.198	0.4356
014	62131-14170	SHIM	1				0.002	0.0044
015	04612-00240	CIR-CLIP EXTERNAL	1	<=11600			0.002	0.0044
015	04612-00220	CIR-CLIP EXTERNAL	1	>=11601			0.001	0.0022
016	66611-14515	SHAFT 5	1	<=11600			1.03	2.266
016	66706-14510	SHAFT 5	1	>=11601			0	0
017	08101-06205	BEARING BALL(6205)	1				0.14	0.308
018	08101-06303	BEARING BALL(6203)	1				0.112	0.2464
019	04612-00250	CIR-CLIP EXTERNAL	1				0.002	0.0044
020	66711-14530	GEAR SPUR 17	1	<=11600			0.241	0.5302
020	66706-14530	GEAR SPUR 17	1	>=11601			0.29	0.638
021	66704-14710	SHAFT PTO	1	<=11600			0.422	0.9284
021	66706-14710	SHAFT PTO	1	>=11601			0.61	1.342
022	08711-30204	BEARING	1				0.116	0.2552
023	08711-30205	BEARING	1				0.148	0.3256
024	66704-14720	WASHER	1				0.009	0.0198
025	09180-35488	SEAL OIL	1				0.019	0.0418
026	66711-14790	GEAR SPUR 18	1	<=11600			0.277	0.6094
026	66706-14790	GEAR SPUR 18	1	>=11601			0.32	0.704
027	66611-14730	BUSH	1				0.042	0.0924
028	66611-14740	COLLAR	1	<=11600			0.004	0.0088
028	66706-14740	COLLAR	1	>=11601			0.03	0.066
029	66611-14750	SHIM 1	1				0.002	0.0044
029	66611-14760	SHIM 2	1				0.002	0.0044
029	66611-14770	SHIM 3	1				0.001	0.0022
030	66704-14790	VINYL COVER PTO	1	<=11600			0.015	0.033
030	66706-14810	VINYL COVER PTO	1	>=11601			0.024	0.0528
031	63753-32430	WASHER	1				0.001	0.0022
032	66704-14730	BOLT	1				0.012	0.0264
033	66706-14390	SPRING	1				0.045	0.099
034	66706-14520	BUSH	1				0.004	0.0088
035	66706-14780	COLLAR	1	<=11830			0.008	0.0176
035	66706-14782	COLLAR	1	>=11831			0.006	0.0132
036	04012-50080	WASHER PLAIN	1				0.001	0.0022
037	66706-14350	SHIM SHAFT 3	1				0.004	0.0088
038	66611-14740	COLLAR	1				0.004	0.0088

silvermorn.co.uk

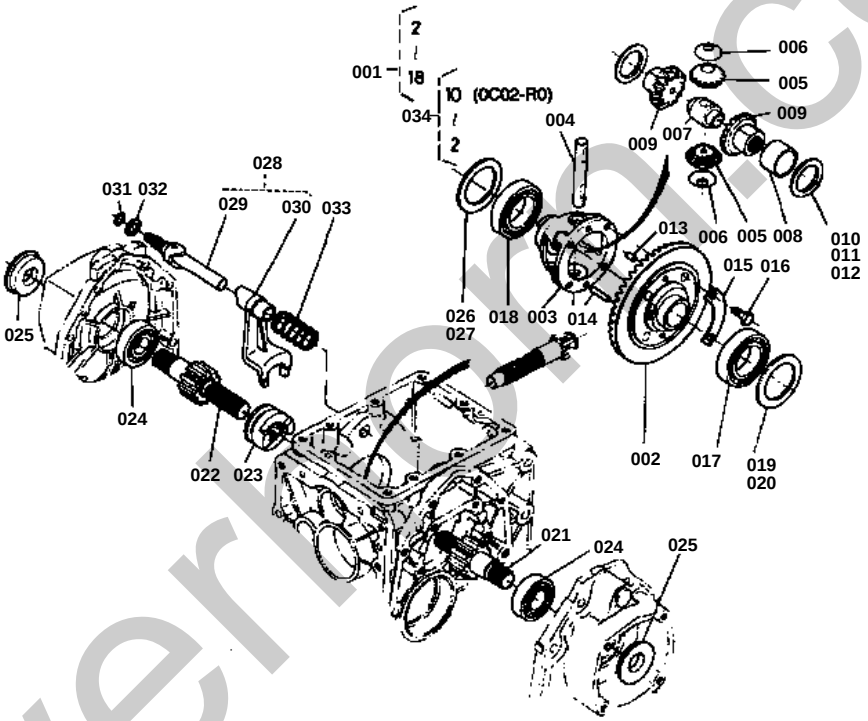

REF.No. 1 66704-8130-0
Adopted, Code No.for
Service parts

REF.No. 9 67211-1494-0
Diverted to other model.

silverhorn.co.uk

↔ Interchangeable; ≠ not interchangeable; ← new for old; → old for new

REF.No	Part No.	Description	Q'ty	S.No.	I/C	REMARKS	Weight (kgf)	Weight (lb)
001	66704-81300	ASSY DIFFERENTIAL	1			REF.No.001 TO 018	0	0
002	99999-99999	BLANK	0			ORDER BY REF.NO.034	0	0
003	66611-14920	CASE DIFFERENTIAL	1				0.68	1.496
004	66591-14830	SHAFT DIFF PINION	1				0.1	0.22
005	66611-14930	PINION DIFFERENTIAL	2				0.12	0.264
006	66591-14850	COLLAR PINION THRUST	2				0.006	0.0132
007	66591-14860	COLLAR DIFF THRUST	1				0.102	0.2244
008	66611-14950	BUSH	1				0.032	0.0704
009	66611-14960	GEAR DIFF SIDE	2				0	0
009	67211-14940	GEAR DIFF SIDE	2	<=16743			0	0
009	67211-15150	GEAR DIFF SIDE	2	>=16744			0.158	0.3476
010	67211-15160	SHIM 1	1				0.01	0.022
011	67211-15170	SHIM 2	1				0.008	0.0176
012	67211-15180	SHIM 3	1				0.01	0.022
013	66591-14790	PIN KNOCK	1				0.004	0.0088
014	66591-14783	PIN STRAIGHT	1				0.01	0.022
015	66591-14910	PLATE LOCK	2				0.006	0.0132
016	01156-50820	BOLT	4				0.01	0.022
017	08101-06009	BEARING BALL(6009)	1				0.22	0.484
018	08101-06010	BEARING BALL(6010)	1				0.262	0.5764
019	66591-14980	SHIM DIFF SIDE 3	1				0.005	0.011
020	66591-14990	SHIM DIFF SIDE 4	1				0.002	0.0044
021	66611-15110	SHAFT DIFF GEAR LH	1				0.58	1.276
022	66611-15120	SHAFT DIFF GEAR RH	1				0.68	1.496
023	66611-15130	CLUTCH DIFF LOCK	1				0.2	0.44
024	08101-06305	BEARING BALL(6305)	2				0.23	0.506
025	66611-14940	SEAL OIL	2				0.02	0.044
026	66611-15140	SHIM DIFF SIDE 5	1				0.006	0.0132
027	66611-15150	SHIM DIFF SIDE 6	1				0.002	0.0044
028	66611-19100	ASSY CAM FORK	1			REF.No.029 030	0.42	0.924
029	66591-18280	ASSY ROD FORK	1				0.16	0.352
030	66611-19110	FORK DIFF LOCK	1				0.24	0.528
031	04811-10120	O RING	1				0.001	0.0022
032	66591-18340	SHIM	2				0.001	0.0022
033	66591-18320	SPRING	1				0.02	0.044
034	66711-82710	ASSY BEVEL GEAR 6-37	1			REF.No.002 AND 010 ON L.No.0C02-R0	0	0

silverhorn.co.uk

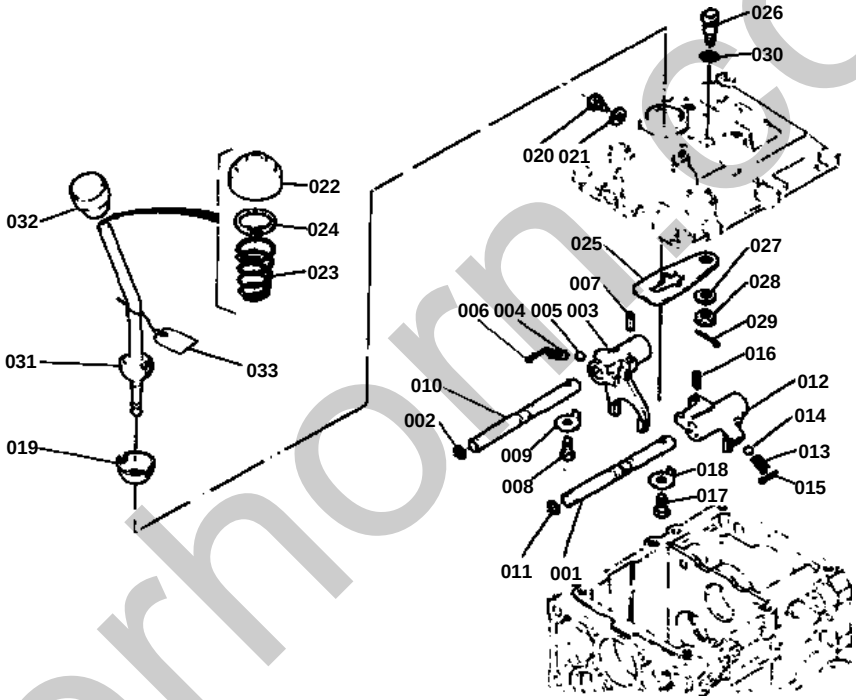

silverhorn.co.uk

↔ Interchangeable; ≠ not interchangeable; ← new for old; → old for new

REF.No	Part No.	Description	Q'ty	S.No.	I/C	REMARKS	Weight (kgf)	Weight (lb)
001	66611-18110	SHAFT FORK 2-3	1				0.15	0.33
002	04811-06100	O RING	1				0.001	0.0022
003	66591-18140	FORK SHIFT 1	1				0.242	0.5324
004	62061-18260	SPRING	1				0.002	0.0044
005	07715-01605	BALL	1				0.003	0.0066
006	05511-50322	PIN SPLIT	1				0.002	0.0044
007	05411-00520	PIN SPRING	1				0.002	0.0044
008	01150-50816	BOLT	1				0.01	0.022
009	04111-50080	WASHER TONGUED	1				0.001	0.0022
010	66704-18110	SHAFT FORK 1	1				0.154	0.3388
011	04811-06100	O RING	1				0.001	0.0022
012	66591-18130	FORK SHIFT 2-3	1				0.248	0.5456
013	62061-18260	SPRING	1				0.002	0.0044
014	07715-01605	BALL	1				0.003	0.0066
015	05511-50322	PIN SPLIT	1				0.002	0.0044
016	05411-00520	PIN SPRING	1				0.002	0.0044
017	01150-50816	BOLT	1				0.01	0.022
018	04111-50080	WASHER TONGUED	1				0.001	0.0022
019	66591-18410	BUSH	1				0.004	0.0088
020	66515-18240	PIN ROD GUIDE	2				0.01	0.022
021	04714-00080	GASKET	2				0.001	0.0022
022	66591-18420	COVER MAIN SP-CHANGE	1				0.014	0.0308
023	66591-18430	SPRING LEVER	1				0.024	0.0528
024	04611-00380	CIR-CLIP INTERNAL	1				0.004	0.0088
025	66591-18443	PLATE CHECK	1				0.06	0.132
026	66591-18450	BOLT CHECK PLATE	1				0.024	0.0528
027	04011-50100	WASHER PLAIN	1				0.002	0.0044
028	02372-50100	NUT SLOTTED	1				0.005	0.011
029	05511-50218	PIN SPLIT	1				0.001	0.0022
030	04811-10100	O RING	1				0.001	0.0022
031	66711-42320	LEVER MAIN SP-CHANGE	1				0.295	0.649
032	66711-42310	GRIP LEVER	1				0.033	0.0726
033	66706-47480	CARD INSTRUCTION	1	>=16679			0.001	0.0022

silvernorn.co.uk

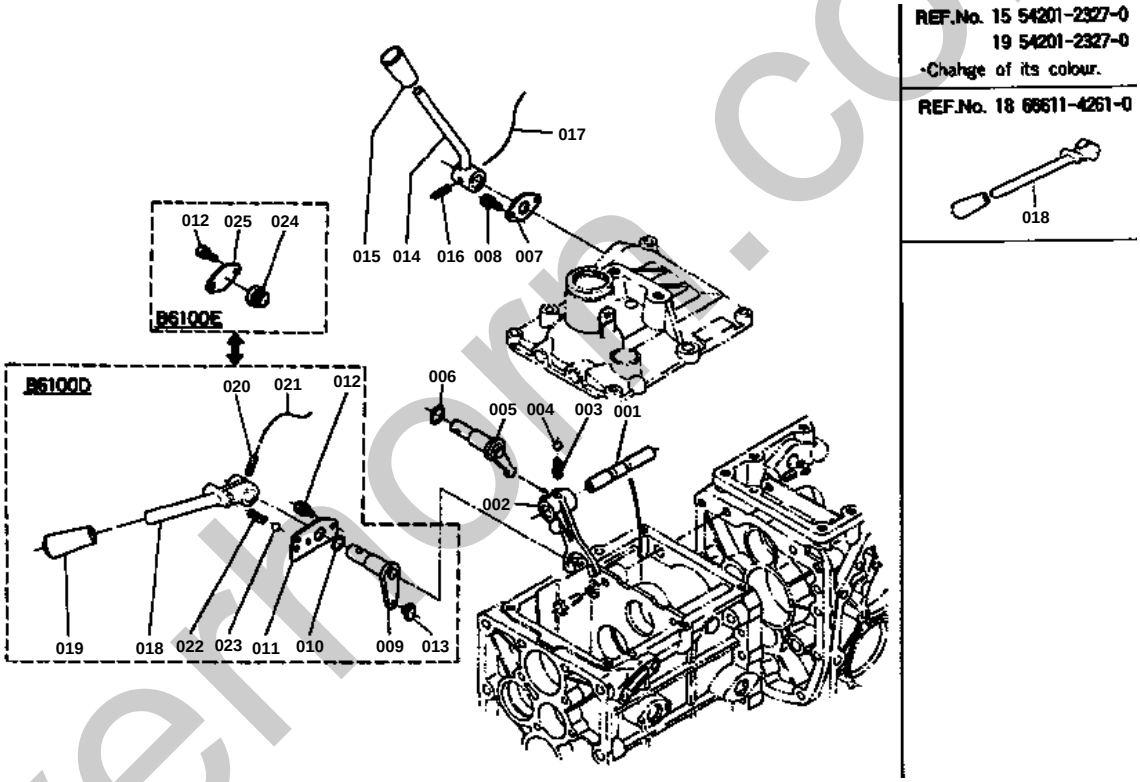

silvermore.co.uk

AUX.SPEED CHANGE GROUP

↔ Interchangeable; ≠ not interchangeable; ← new for old; → old for new

REF.No	Part No.	Description	Q'ty	S.No.	I/C	REMARKS	Weight (kgf)	Weight (lb)
001	66611-18412	SHAFT FORK	1				0.088	0.1936
002	66611-18420	FORK SHIFT	1				0	0
003	62061-18260	SPRING	1				0.002	0.0044
004	07715-01605	BALL	1				0.003	0.0066
005	66591-18170	ARM AUX SPEED CHANGE	1				0.106	0.2332
006	04811-00160	O RING	1				0.001	0.0022
007	66591-18180	HOLDER FORK ROD 1	1				0.012	0.0264
008	01202-50614	BOLT	2				0.006	0.0132
012	01202-50614	BOLT	2				0.006	0.0132
014	66711-42510	LEVER AUX SP-CHANGE	1				0.16	0.352
015	54201-23270	GRIP LEVER	1				0.02	0.044
016	05411-00622	PIN SPRING	1				0.003	0.0066
017	99999-99999	BLANK	0			OBTAINED LOCALLY	0	0
021	99999-99999	BLANK	0			OBTAINED LOCALLY	0	0
024	66581-18120	PLUG	1				0.004	0.0088
025	66581-18130	PLATE PLUG	1				0.016	0.0352

silverhorn.co.uk

REF.No. 14 54201-2327-0
•Change of its colour.

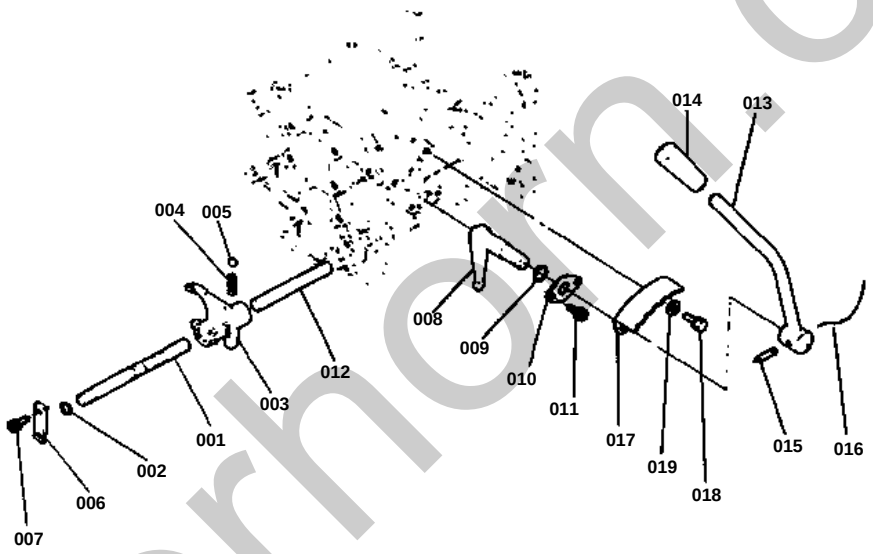

silverhoin.co.uk

↔ Interchangeable; ≠ not interchangeable; ← new for old; → old for new

REF.No	Part No.	Description	Q'ty	S.No.	I/C	REMARKS	Weight (kgf)	Weight (lb)
001	66611-18610	FORK SHIFT	1				0.16	0.352
002	04811-06100	O RING	1				0.001	0.0022
003	66591-18210	FORK SHIFT	1				0.2	0.44
004	62061-18260	SPRING	1				0.002	0.0044
005	07715-01605	BALL	1				0.003	0.0066
006	66591-18120	STOPPER	1				0.018	0.0396
007	01202-50614	BOLT	2				0.006	0.0132
008	66591-18220	ARM	1				0.12	0.264
009	04811-00160	O RING	1				0.001	0.0022
010	66591-18180	HOLDER FORK ROD 1	1				0.012	0.0264
011	01202-50614	BOLT	2				0.006	0.0132
012	66611-19310	ROD	1				0.129	0.2838
013	66611-42710	LEVER	1				0.237	0.5214
014	54201-23270	GRIP LEVER	1				0.02	0.044
015	05411-00622	PIN SPRING	1				0.003	0.0066
016	99999-99999	BLANK	0			OBTAINED LOCALLY	0	0
017	66591-42170	GUIDE CHANGE LEVER	1				0	0
018	01120-50816	BOLT	2				0	0
019	04013-50080	WASHER PLAIN	2				0	0

silverhorn.co.uk

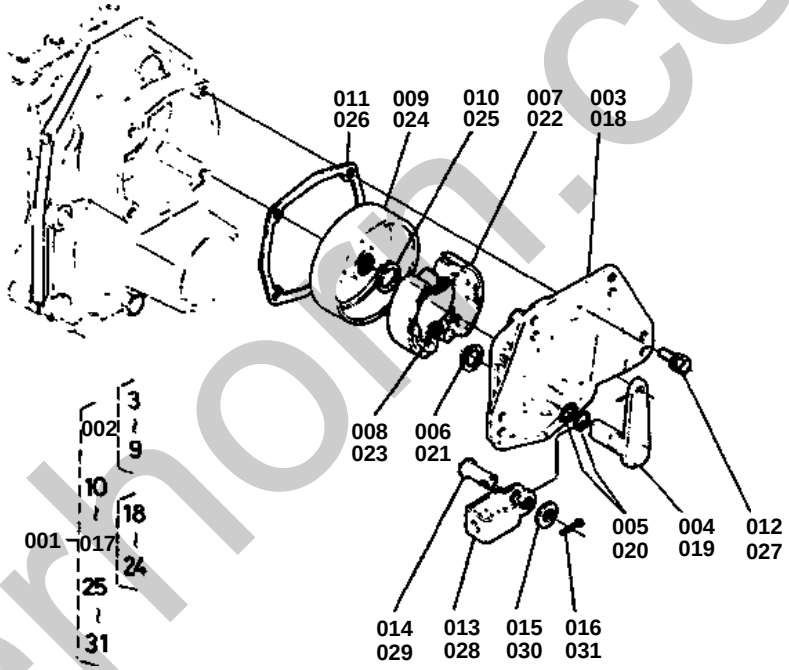

silverhorn.co.uk

↔ Interchangeable; ≠ not interchangeable; ← new for old; → old for new

REF.No	Part No.	Description	Q'ty	S.No.	I/C	REMARKS	Weight (kgf)	Weight (lb)
001	66611-22102	ASSY BRAKE	1			REF.No.002 010 TO 017 AND 025 TO 031	5.14	11.308
002	66611-22303	ASSY BRAKE LH	1			REF.No.003 TO 009	0	0
003	66611-22312	COVER BRAKE LH	1				1.04	2.288
004	66591-22330	CAM BRAKE LH	1				0.204	0.4488
005	04811-05170	O RING	2				0.001	0.0022
006	04612-00200	CIR-CLIP EXTERNAL	1				0.001	0.0022
007	66611-88800	SHOE BRAKE	2				0	0
008	66591-22350	SPRING RETURN	2				0.003	0.0066
009	66611-22360	DRUM BRAKE	1				0	0
010	04612-00220	CIR-CLIP EXTERNAL	1				0.001	0.0022
011	66591-22410	GASKET	1				0	0
012	01120-50822	BOLT	4				0	0
013	63753-42350	METAL MAIN CLUTCH	1				0.038	0.0836
014	05122-50820	PIN JOINT	1				0.009	0.0198
015	04012-50080	WASHER PLAIN	1				0.001	0.0022
016	05511-50215	PIN SPLIT	1				0.001	0.0022
017	66611-22403	ASSY BRAKE RH	1			REF.No.018 TO 024	0	0
018	66611-22412	COVER BRAKE RH	1				1.05	2.31
019	66591-22370	CAM BRAKE RH	1				0.204	0.4488
020	04811-05170	O RING	2				0.001	0.0022
021	04612-00200	CIR-CLIP EXTERNAL	1				0.001	0.0022
022	66611-88800	SHOE BRAKE	2				0	0
023	66591-22350	SPRING RETURN	2				0.003	0.0066
024	66611-22360	DRUM BRAKE	1				0	0
025	04612-00220	CIR-CLIP EXTERNAL	1				0.001	0.0022
026	66591-22410	GASKET BRAKE	1				0	0
027	01120-50822	BOLT	4				0	0
028	63753-42350	METAL MAIN CLUTCH	1				0.038	0.0836
029	05122-50820	PIN JOINT	1				0.009	0.0198
030	04012-50080	WASHER PLAIN	1				0.001	0.0022
031	05511-50215	PIN SPLIT	1				0.001	0.0022

silvermorn.co.uk

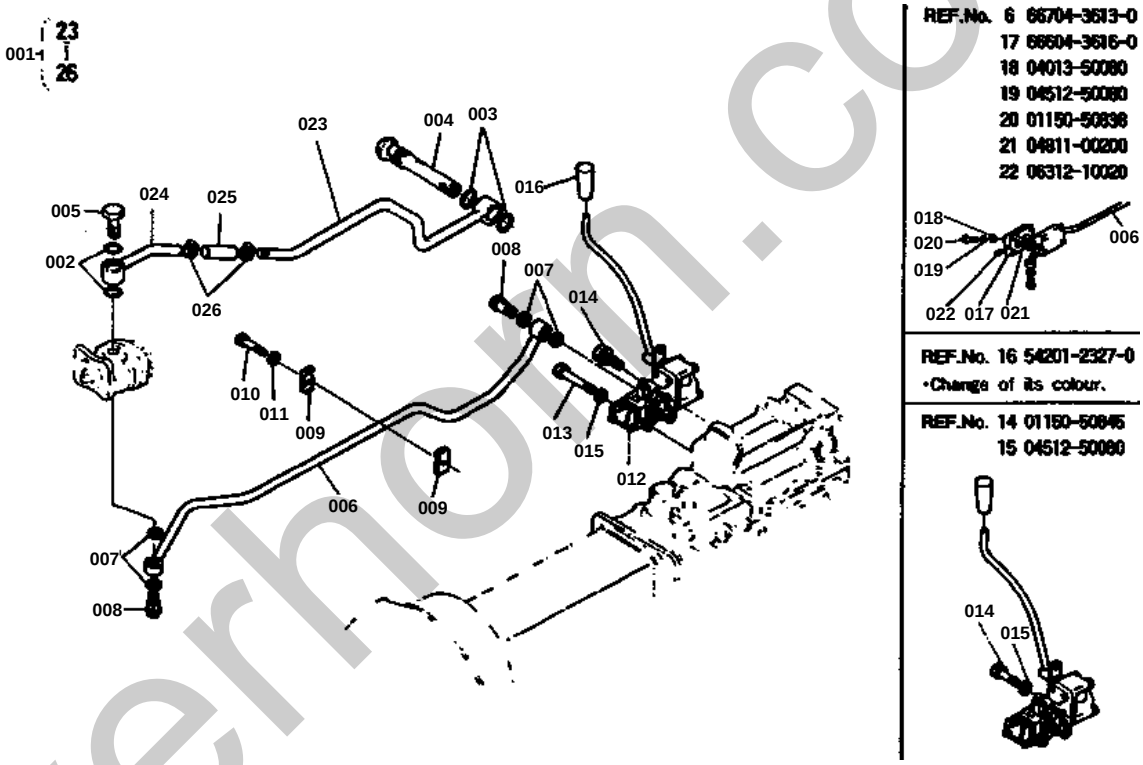

silverhorn.co.uk

OIL PRESSURE PIPE GROUP

↔ Interchangeable; ≠ not interchangeable; ← new for old; → old for new

REF.No	Part No.	Description	Q'ty	S.No.	I/C	REMARKS	Weight (kgf)	Weight (lb)
001	66711-36110	PIPE INLET	1				0	0
001	66704-36100	ASSY PIPE INLET	1	>=10001		REF.No.023 TO 026	0.6	1.32
002	04811-00220	O RING	2				0.001	0.0022
003	04811-10300	O RING	2				0.001	0.0022
004	66611-36120	FILTER OIL	1				0.2	0.44
005	32170-38170	BOLT EYE JOINT	1				0.09	0.198
006	66709-36130	PIPE DELIVERY	1	<=13621		EXCEPT IRAN	1.2	2.64
006	66711-36130	PIPE DELIVERY	1	>=13622		EXCEPTIRAN	0.56	1.232
007	04714-00300	GASKET	4				0.002	0.0044
007	67111-37180	GASKET	4	>=10001			0.003	0.0066
008	54203-36150	JOINT PIPE	2				0.079	0.1738
009	66711-36140	CLAMP PIPE	2				0.007	0.0154
010	01050-50645	BOLT	1				0.011	0.0242
011	04015-50060	WASHER PLAIN	1				0	0
012	66711-36200	ASSY VALVE CONTROL	1				2.665	5.863
013	01150-50875	BOLT	2				0	0
014	01150-50845	BOLT	1				0.019	0.0418
014	01120-50845	BOLT	1				0.02	0.044
015	04512-50080	WASHER SPRING	3				0	0
015	04512-50080	WASHER SPRING	2				0	0
016	54201-23270	GRIP LEVER	1				0.02	0.044
017	66604-36160	COVER	1	<=13621		EXCEPT IRAN	0.23	0.506
018	04013-50080	WASHER PLAIN	4	<=13621		EXCEPT IRAN	0	0
019	04512-50080	WASHER SPRING	4	<=13621		EXCEPT IRAN	0	0
020	01150-50838	BOLT	4	<=13621		EXCEPT IRAN	0.017	0.0374
021	04811-00200	O RING	2	<=13621		EXCEPT IRAN	0.001	0.0022
022	06312-10020	PLUG	1	<=13621		EXCEPT IRAN	0.015	0.033
023	66704-36110	PIPE INLET	1				0.5	1.1
024	66704-36120	PIPE INLET	1				0.15	0.33
025	66204-36720	HOSE	1				0.04	0.088
026	66204-36230	BAND	2				0.02	0.044

silverhorn.co.uk

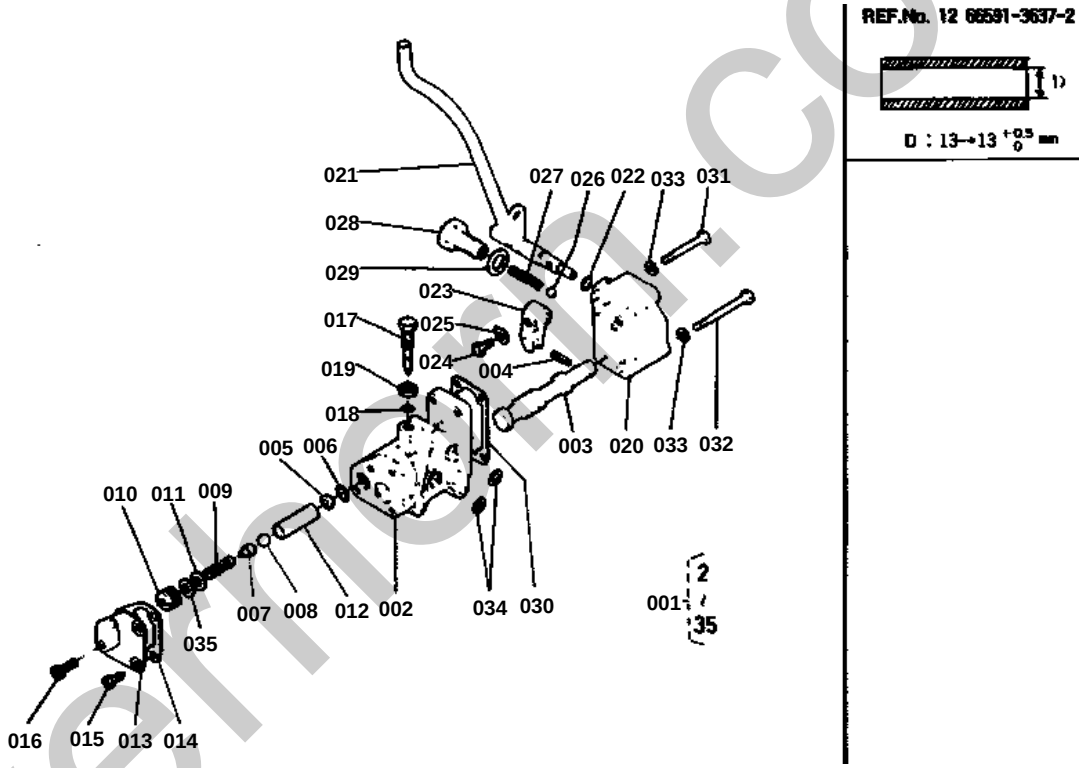

silvermerr.co.uk

CONTROL VALVE GROUP

↔ Interchangeable; ≠ not interchangeable; ← new for old; → old for new

REF.No	Part No.	Description	Q'ty	S.No.	I/C	REMARKS	Weight (kgf)	Weight (lb)
001	66711-36200	ASSY VALVE CONTROL	1			REF.No.002 TO 035	2.665	5.863
002	99999-99999	BLANK	0			ORDER BY REF.No.001	0	0
003	66611-36290	SPOOL	1				0.172	0.3784
004	05411-00620	PIN SPRING	1				0.002	0.0044
005	66591-36330	SEAT VALVE	1				0.008	0.0176
006	04811-15120	O RING	1				0.001	0.0022
007	66611-36222	HOLDER SPRING	1				0.008	0.0176
008	07715-03211	BALL	1				0.003	0.0066
009	66591-36350	SPRING	1				0.01	0.022
010	66591-36360	SCREW ADJUSTING	1				0.012	0.0264
011	04012-50060	WASHER PLAIN	1				0.001	0.0022
012	66591-36370	COLLAR	1	<=13621			0.016	0.0352
012	66591-36372	COLLAR	1	>=10001			0	0
013	66611-36260	COVER RELIEF	1				0.03	0.066
014	66591-36390	GASKET	1				0	0
015	01202-50618	BOLT	2				0.006	0.0132
016	01202-50622	BOLT	2				0.007	0.0154
017	66591-36413	BOLT ADJUSTING	1				0.028	0.0616
018	04811-10040	O RING	1				0.001	0.0022
019	02112-50100	NUT	1				0.004	0.0088
020	66591-36430	COVER VALVE	1				0.18	0.396
021	66711-36250	LEVER CONTROL	1				0.392	0.8624
022	04811-00100	O RING	1				0.001	0.0022
023	66591-36450	ARM VALVE GUIDE	1				0.05	0.11
024	66591-36480	BOLT	1				0.004	0.0088
025	04111-50060	WASHER TONGUED	1				0.001	0.0022
026	07715-00803	BALL	1				0.004	0.0088
027	62061-18270	SPRING BALL STOPPER	1				0.003	0.0066
028	66591-36460	BOLT	1				0.054	0.1188
029	04714-00300	GASKET	1				0.002	0.0044
030	66591-36470	GASKET VALVE COVER	1				0	0
031	01050-50650	BOLT	2				0.012	0.0264
032	01050-50665	BOLT	2				0.014	0.0308
033	04512-50060	WASHER SPRING	4				0	0
034	04811-00120	O RING	2				0.001	0.0022
035	66611-36330	SHIM	1				0.001	0.0022

silverhorn.co.uk

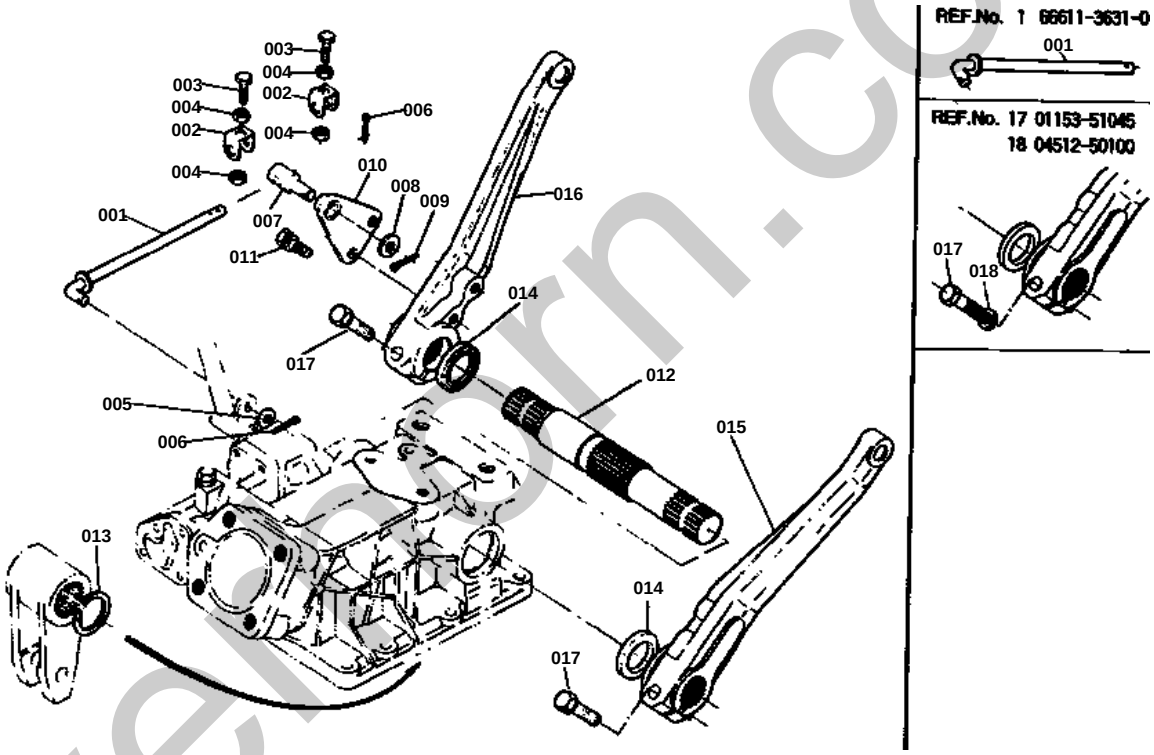

silvermorn.co.uk

OIL PRESSURE GROUP 1

↔ Interchangeable; ≠ not interchangeable; ← new for old; → old for new

REF.No	Part No.	Description	Q'ty	S.No.	I/C	REMARKS	Weight (kgf)	Weight (lb)
001	66611-36310	ROD CHECK	1	<=11600			0.064	0.1408
001	66704-36310	ROD CHECK	1	>=10001			0.075	0.165
002	66611-36320	INTERLOCKER	2				0.022	0.0484
003	01153-50822	BOLT	2				0.011	0.0242
004	02112-50080	NUT	4				0.003	0.0066
005	04012-50080	WASHER PLAIN	1				0.001	0.0022
006	05511-50215	PIN SPTIT	2				0.001	0.0022
007	66591-36540	SHAFT	1				0.034	0.0748
008	04011-50100	WASHER PLAIN	1				0.002	0.0044
009	05511-50318	PIN SPLIT	1				0.001	0.0022
010	66591-36550	HOLDER	1				0.072	0.1584
011	01120-50822	BOLT	2				0	0
012	66591-36690	SHAFT O/P ARM	1				0	0
013	04612-00320	CIR-CLIP EXTERNAL	1				0.004	0.0088
014	09230-28405	SEAL OIL	2				0.006	0.0132
015	66611-36510	ARM LIFT LH	1				0	0
016	66611-36520	ARM LIFT RH	1				0	0
017	01153-51045	BOLT	2				0.031	0.0682
017	01123-51045	BOLT	2				0.032	0.0704
018	04512-50100	WASHER SPRING	2				0	0

silverhorn.co.uk

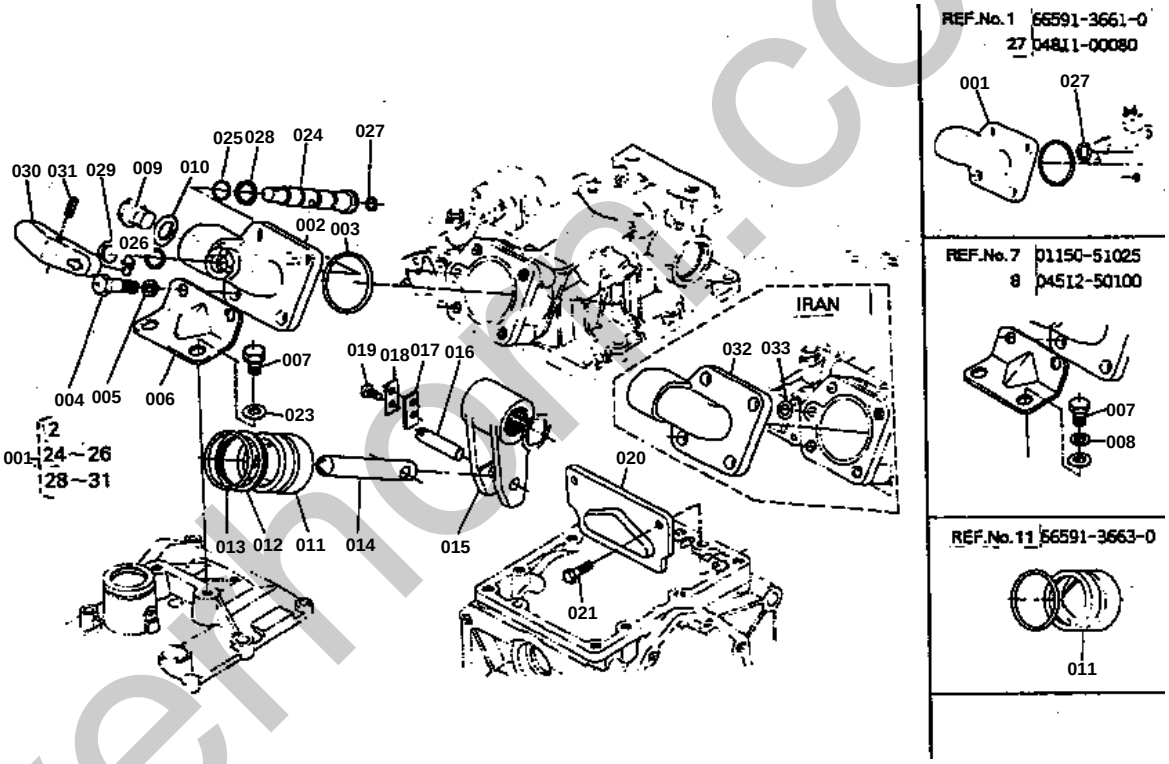

silverhand.co.uk

OIL PRESSURE GROUP 2

↔ Interchangeable; ≠ not interchangeable; ← new for old; → old for new

REF.No	Part No.	Description	Q'ty	S.No.	I/C	REMARKS	Weight (kgf)	Weight (lb)
001	66591-36610	CAP CYLINDER	1	<=13621		EXCEPT IRAN	1.268	2.7896
001	66404-36600	ASSY CAP CYLINDER	1	>=13622		REF.No.002 024 TO 026 AND 028 TO 031 EXC	1.17	2.574
002	96319-01410	CAP CYLINDER	1			EXCEPT IRAN	1.02	2.244
003	04811-50550	O RING	1				0.002	0.0044
004	66711-36440	BOLT	2				0.045	0.099
005	04512-50120	WASHER SPRING	2				0	0
006	66611-36413	STAY	1				0.14	0.308
007	01150-51025	BOLT	2				0	0
007	01120-51025	BOLT	2				0	0
008	04512-50100	WASHER SPRING	2				0	0
009	06311-25040	PLUG	1				0.09	0.198
010	66611-36420	GASKET	1				0.006	0.0132
011	66591-36630	PISTON OIL PRESSURE	1	<=16557			0.55	1.21
011	67211-36410	PISTON OIL PRESSURE	1	>=16558			0.55	1.21
012	67211-36420	RING	1	<=16557			0.003	0.0066
013	04810-08500	O RING	1				0.005	0.011
014	66591-36640	ROD O/P PISTON	1				0.31	0.682
015	66591-36650	ARM OIL PRESSURE	1				0.8	1.76
016	66591-36660	PIN ARM	1				0.045	0.099
017	66591-36670	PLATE LOCK	1				0.01	0.022
018	66591-36680	WASHER LOCK	1				0.002	0.0044
019	01050-50612	BOLT	2				0.005	0.011
020	66621-36750	PLATE O/P ARM	1				0.34	0.748
021	01153-50822	BOLT	2	<=17444		OLD	0.011	0.0242
021	67211-36610	BOLT	2	>=10001		NEW	0.015	0.033
022	04111-50080	WASHER TONGUED	2	<=17444		WITH REF.No.021 OLD	0.001	0.0022
023	04013-50100	WASHER PLAIN	2			EXCEPT IRAN	0	0
024	96319-01422	SPOOL SUB	1	>=13622		EXCEPT IRAN	0.07	0.154
025	04811-00120	O RING	1	>=13622		EXCEPT IRAN	0.001	0.0022
026	04811-00160	O RING	1	>=13622		EXCEPT IRAN	0.001	0.0022
027	04811-00080	O RING	1	<=13621		EXCEPT IRAN	0.001	0.0022
027	04811-00100	O RING	1	>=13622		EXCEPT IRAN	0.001	0.0022
027	04811-00100	O RING	1	<=16678		EXCEPT IRAN	0.001	0.0022
027	04810-05110	O RING	1	>=10001		EXCEPT IRAN	0.001	0.0022
028	96319-01430	WASHER	1	>=13622		EXCEPT IRAN	0.002	0.0044
029	96319-01440	SPRING	1	>=13622		EXCEPT IRAN	0.002	0.0044
030	96319-01450	GRIP	1	>=13622		EXCEPT IRAN	0.04	0.088
031	05411-00520	PIN SPRING	1	>=13622		EXCEPT IRAN	0.002	0.0044

silverthorn.co.uk

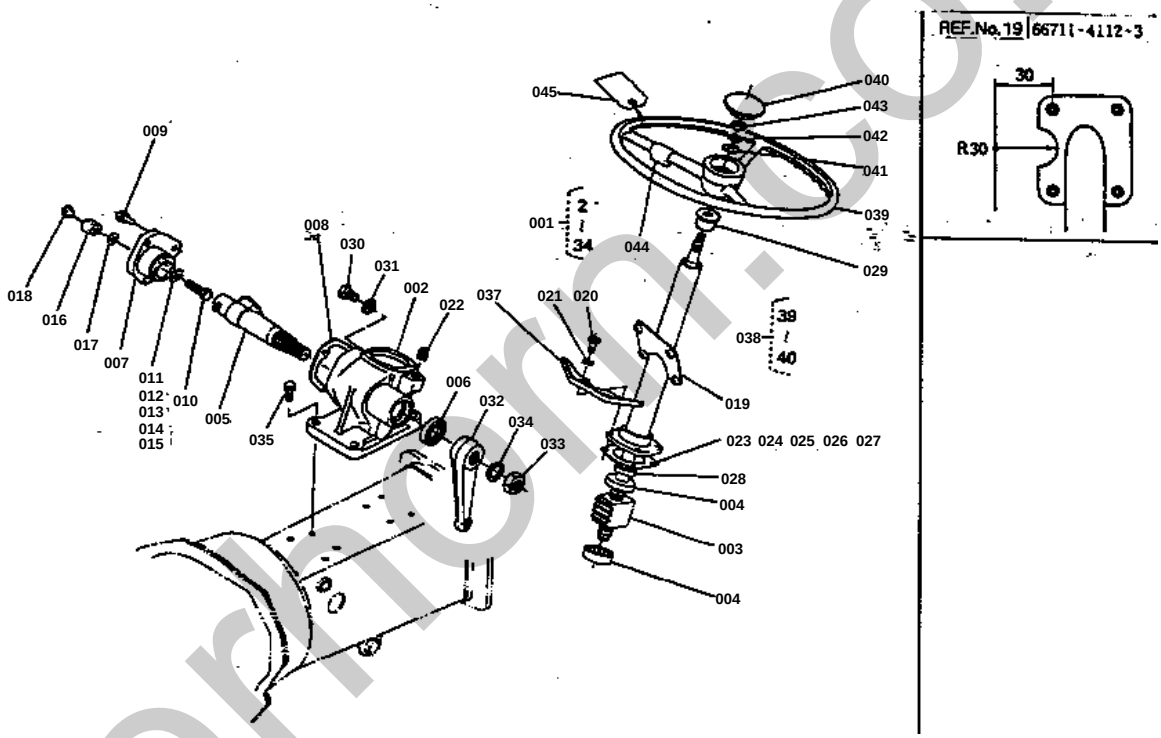

silverhorn.co.uk

↔ Interchangeable; ≠ not interchangeable; ← new for old; → old for new

REF.No	Part No.	Description	Q'ty	S.No.	I/C	REMARKS	Weight (kgf)	Weight (lb)
001	66711-41100	ASSY STEERING	1	<=16769		REF.No.002 TO 034	0	0
001	66711-41103	ASSY STEERING	1	>=10001		REF.No.002 TO 034	6.3	13.86
002	66811-41110	CASE STEERING GEAR	1				0	0
003	66811-41200	ASSY NUT BALL	1				1.11	2.442
004	66811-41140	BEARING THRUST BALL	2				0.045	0.099
005	66811-41150	SHAFT SECTOR	1				0.52	1.144
006	09500-22358	SEAL OIL	1				0.01	0.022
007	66811-41160	COVER SIDE	1				0.3	0.66
008	66811-41170	GASKET	1				0	0
009	01120-50822	BOLT	3				0	0
010	66811-41180	SCREW ADJUSTING	1				0.013	0.0286
011	66811-41190	COLLAR ADJUSTING 1	1				0.002	0.0044
012	66811-41210	COLLAR ADJUSTING 2	1				0.001	0.0022
013	66811-41220	COLLAR ADJUSTING 3	1				0.001	0.0022
014	66811-41230	COLLAR ADJUSTING 4	1				0.001	0.0022
015	66811-41240	COLLAR ADJUSTING 5	1				0.001	0.0022
016	66811-41250	NUT	1				0.027	0.0594
017	04714-00080	GASKET	1				0.001	0.0022
018	61011-18140	PLUG	1				0.002	0.0044
019	66711-41122	POST STEERING	1	<=16769			0	0
019	66711-41123	POST STEERING	1	>=10001			1.05	2.31
020	01153-50825	BOLT	4				0.012	0.0264
021	04512-50080	WASHER SPRING	4				0	0
022	34150-16640	PLUG	1				0.015	0.033
023	66811-41320	SHIM 1	1				0.001	0.0022
024	66811-41330	SHIM 2	1				0	0
025	66811-41340	SHIM 3	1				0.001	0.0022
026	66811-41350	SHIM 4	1				0.001	0.0022
027	66811-41360	SHIM 5	1				0.003	0.0066
028	09500-16287	SEAL OIL	1				0.01	0.022
029	66591-41250	BUSH POST	1				0.016	0.0352
030	06331-35010	PLUG	1				0.012	0.0264
031	04717-01000	WASHER SEAL	1				0.001	0.0022
032	66811-41410	ARM PITMAN	1				0.38	0.836
033	02172-50160	NUT	1				0.017	0.0374
034	04512-50160	WASHER SPRING	1				0	0
035	01153-50828	BOLT	4			OLD	0.014	0.0308
035	01123-50828	BOLT	4	>=10001		NEW	0.014	0.0308
036	04512-50080	WASHER SPRING	4			WITH REF.No.035 OLD	0	0
037	66711-41130	HOOK SPRING	1				0.11	0.242
038	66611-41400	ASSY WHEEL STEERING	1			REF.No.039 040	0	0
039	99999-99999	BLANK	0			ORDER BY REF.NO.038	0	0
040	66611-41420	CAP STEERING WHEEL	1				0.026	0.0572
041	04013-50120	WASHER PLAIN	1				0	0
042	04512-50120	WASHER SPRING	1				0	0
043	02172-50120	NUT	1				0.01	0.022
044	34209-18370	CARD INSTRUCTION	1			AMERICA	0.001	0.0022
044	35217-18370	CARD INSTRUCTION	1	>=10001		AMERICA	0.001	0.0022
045	35170-18370	CARD INSTRUCTION	1			EXCEPT AMERICA	0.001	0.0022

silverhorn.co.uk

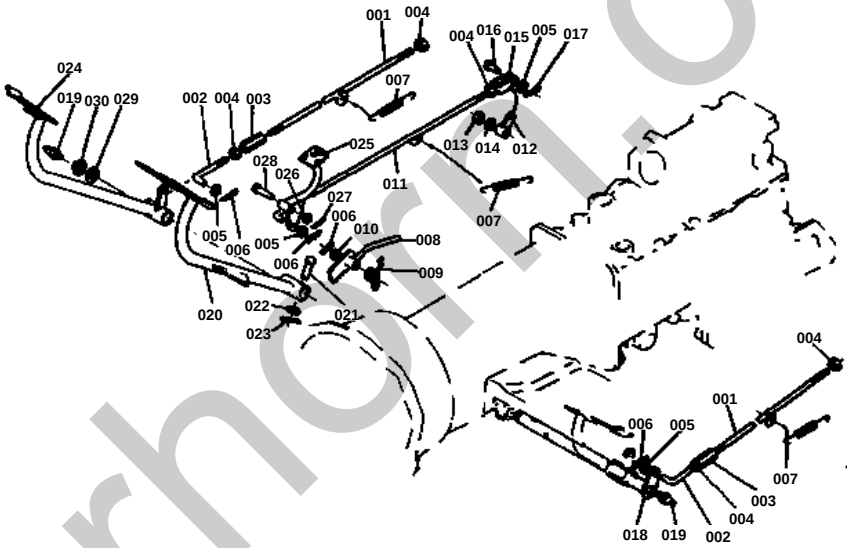

silverhorn.co.uk

BRAKE ROD GROUP

↔ Interchangeable; ≠ not interchangeable; ← new for old; → old for new

REF.No	Part No.	Description	Q'ty	S.No.	I/C	REMARKS	Weight (kgf)	Weight (lb)
001	66711-42810	ROD BRAKE	2				0.212	0.4664
002	66621-43250	ROD BRAKE FRONT	2				0.024	0.0528
003	66591-42410	TURNBUCKLE	2				0.046	0.1012
004	02112-50080	NUT	5				0.003	0.0066
005	04012-50080	WASHER PLAIN	4				0.001	0.0022
006	05511-50318	PIN SPLIT	4				0.001	0.0022
007	66591-43190	SPRING	3				0.044	0.0968
008	66711-42850	LEVER BRAKE LOCK	1				0.116	0.2552
009	66711-42860	SPRING	1				0.005	0.011
010	04011-50100	WASHER PLAIN	1				0.002	0.0044
011	66711-42870	ROD DIFF LOCK	1				0.24	0.528
012	66591-43170	LEVER DIFF LOCK	1				0.041	0.0902
013	02118-50100	NUT	1				0.005	0.011
014	04512-50100	WASHER SPRING	1				0	0
015	63753-42350	METAL MAIN CLUTCH	1				0.038	0.0836
016	05122-50820	PIN JOINT	1				0.009	0.0198
017	05511-50215	PIN SPLIT	1				0.001	0.0022
018	66711-42910	SHAFT BRAKE PEDAL	1				1.26	2.772
019	06613-10010	NIPPLE GREASE	2				0.006	0.0132
020	66711-42920	PEDAL BRAKE LH	1				0.938	2.0636
021	05112-50840	PIN JOINT	1				0.017	0.0374
022	04012-50080	WASHER PLAIN	1				0.001	0.0022
023	05511-50215	PIN SPLIT	1				0.001	0.0022
024	66711-42930	PEDAL BRAKE RH	1				0.89	1.958
025	66711-42950	PEDAL DIFF LOCK	1				0.325	0.715
026	04011-50140	WASHER PLAIN	1				0.007	0.0154
027	05511-50425	PIN SPLIT	1				0.003	0.0066
028	05112-51450	PIN JOINT	1				0.064	0.1408
029	66591-43230	COLLAR	1				0	0
030	04612-00240	CIR-CLIP EXTERNAL	1				0.002	0.0044

silverhorn.co.uk

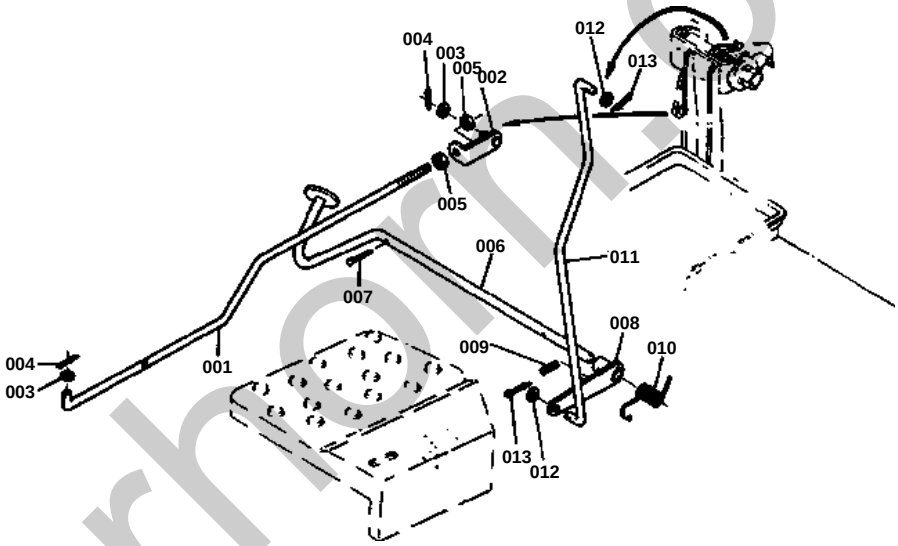

silverhorn.co.uk

ACCELERATOR PEDAL GROUP

↔ Interchangeable; ≠ not interchangeable; ← new for old; → old for new

REF.No	Part No.	Description	Q'ty	S.No.	I/C	REMARKS	Weight (kgf)	Weight (lb)
001	66711-43210	ROD RELEASE	1				0.136	0.2992
002	66711-43220	METAL	1				0.023	0.0506
003	04013-50060	WASHER PLAIN	2				0	0
004	05511-51612	PIN SPLIT	2				0.001	0.0022
005	02014-50060	NUT	2				0.003	0.0066
006	66711-43410	PEDAL ACCELERATOR	1				0.17	0.374
007	05511-50318	PIN SPLIT	1				0.001	0.0022
008	66711-43420	FULCRUM ACCELE.PEDAL	1				0.048	0.1056
009	05411-00314	PIN SPRING	1				0.001	0.0022
010	66711-43430	SPRING ACCELE.PEDAL	1				0.005	0.011
011	66711-43440	ROD ACCELE.PEDAL	1	<=16478			0.092	0.2024
011	66704-43440	ROD ACCELE.PEDAL	1	>=16479			0.095	0.209
012	04013-50060	WASHER PLAIN	2				0	0
013	05511-51612	PIN SPLIT	2				0.001	0.0022

silverhorn.co.uk

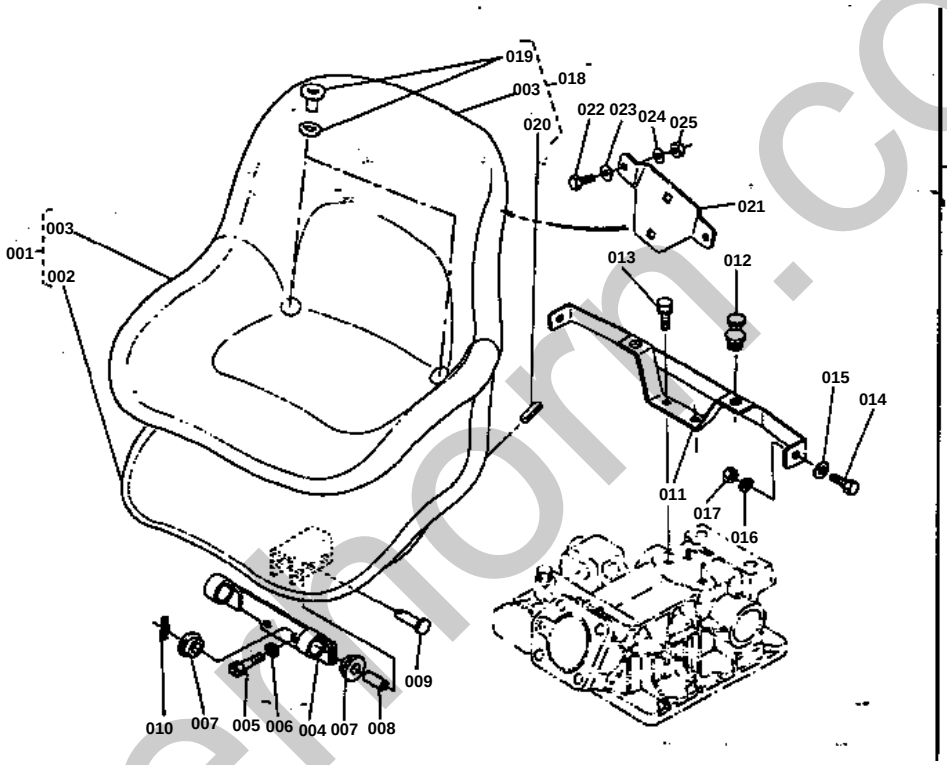

REF.No.		
3	66704-8311-0	
18	66704-8350-0	
19	35110-8505-0	
20	35110-8506-0	

Adopted. Code No. for service parts.

silvermoor.co.uk

SEAT GROUP

↔ Interchangeable; ≠ not interchangeable; ← new for old; → old for new

REF.No	Part No.	Description	Q'ty	S.No.	I/C	REMARKS	Weight (kgf)	Weight (lb)
001	66711-45900	ASSY SEAT	1			REF.No.002 003	4.8	10.56
002	99999-99999	BLANK	0			ORDER BY REF.No.001	0	0
003	99999-99999	BLANK	0			ORDER BY REF.No.001 OR 018	0	0
004	66711-45930	SUPPORT SEAT FRONT	1				0.7	1.54
005	66711-36440	BOLT	2				0.045	0.099
006	04512-50120	WASHER SPRING	2				0	0
007	66591-41540	CUSHION	4				0.01	0.022
008	66591-41550	COLLAR	2				0.02	0.044
009	05122-51045	PIN JOINT	2				0	0
010	05516-51000	PIN SNAP	2				0	0
011	66711-45940	SUPPORT SEAT REAR	1				0.527	1.1594
012	32240-18440	CUSHION SEAT	2				0.043	0.0946
013	01120-50820	BOLT	2				0	0
013	01123-50825	BOLT	2				0.013	0.0286
014	01150-50816	BOLT	2				0.01	0.022
015	04013-50080	WASHER PLAIN	2				0	0
016	04512-50080	WASHER SPRING	2				0	0
017	02114-50080	NUT	2				0.005	0.011
018	66704-83500	ASSY COVER SEAT	1			REF.No.003 019 AND 020	0.4	0.88
019	35110-85050	EYE-LET	4			2 PIECES ARE SPARE	0.005	0.011
020	35110-85060	PROTECTOR	3				0.01	0.022
021	66704-54950	BRACKET SMV	1			AMERICA CANADA	0	0
022	01050-50616	BOLT	2			AMERICA CANADA	0	0
023	04013-50060	WASHER PLAIN	2			AMERICA CANADA	0	0
024	04512-50060	WASHER SPRING	2			AMERICA CANADA	0	0
025	02014-50060	NUT	2			AMERICA CANADA	0.003	0.0066

silverhorn.co.uk

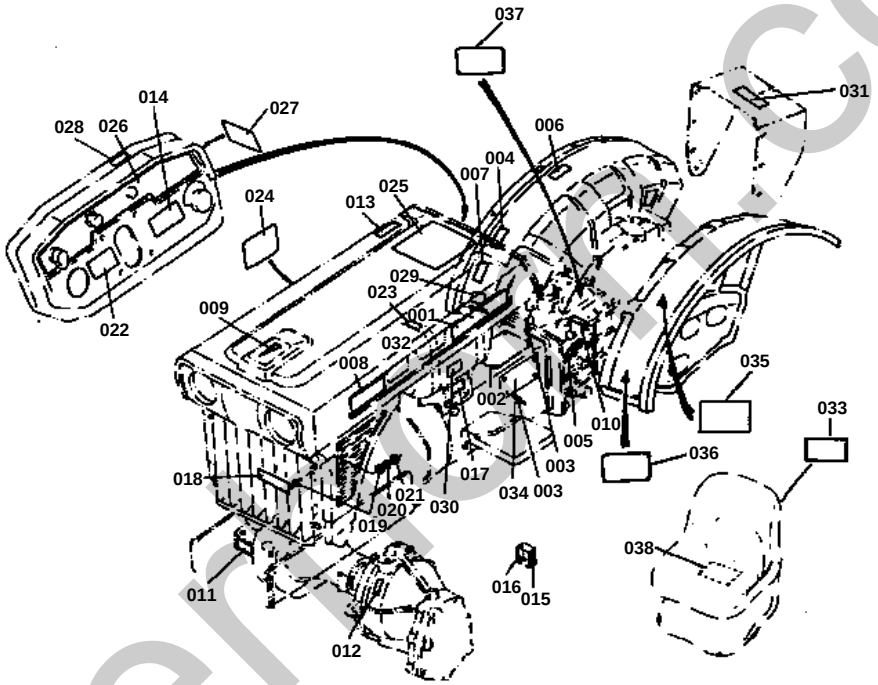

REF.No. 2, 4~17, 10~14 16~17, 22~29 English→Both English and French
REF.No. 66706-4742-0 Indicated, Fuel lower limit
REF.No. 30 66706-4746-0 For caution of P.T.O.speed change
REF.No. 32, 33 Newly adopted
REF.No. 2 66706-4711-0 English→Both English and French for B6100E-P

silvermoll.co.uk

NAME PLATE GROUP

↔ Interchangeable; ≠ not interchangeable; ← new for old; → old for new

REF.No	Part No.	Description	Q'ty	S.No.	I/C	REMARKS	Weight (kgf)	Weight (lb)
001	66621-47110	LABEL KUBOTA	2				0.004	0.0088
002	66894-47120	LABEL SPEED CHANGE	1	<=11600			0	0
002	66706-47110	LABEL SPEED CHANGE	1	>=10001			0.02	0.044
003	54102-24410	RIVET	8				0.001	0.0022
004	66601-48140	NAME PLATE 4	1	<=11600			0.001	0.0022
004	66706-47120	NAKE PLATE 4	1	>=10001			0.001	0.0022
005	66601-48150	NAME PLATE 5	1	<=11600			0.001	0.0022
005	66706-47130	NAME PLATE 5	1	>=10001			0	0
006	66601-48160	NAME PLATE 6	1	<=11600			0.001	0.0022
006	66706-47140	NAME PLATE 6	1	>=10001			0	0
008	66894-47180	NAME PLATE B6100E	2				0.002	0.0044
009	66591-47190	NAME PLATE 9	1				0.001	0.0022
010	66704-47220	LABEL MISSION OIL	1	<=11600			0	0
010	66706-47190	LABEL MISSION OIL	1	>=11601			0.001	0.0022
010	66706-47490	LABEL MISSION OIL	1	>=16679			0.001	0.0022
013	66601-47190	LABEL RELEASE	1	<=11600			0.001	0.0022
013	66706-47230	LABEL RELEASE	1	>=10001			0.001	0.0022
013	66706-47230	LABEL RELEASE	1	<=16478			0.001	0.0022
013	66704-47330	LABEL RELEASE	1	>=16479			0.001	0.0022
014	66704-47260	LABEL GLOW PLUG	1	<=11600			0	0
014	66706-47240	LABEL GLOW PLUG	1	>=10001			0.001	0.0022
015	31220-15970	MARK SPACER	1				0.001	0.0022
016	32130-15930	NAME PLATE SPACER	1	<=11600			0.001	0.0022
016	66706-47250	NAME PLATE SPACER	1	>=10001			0.001	0.0022
017	66601-48270	LABEL TOOLS BOX	1	<=11600			0.001	0.0022
017	66706-47260	LABEL TOOLS BOX	1	>=10001			0.001	0.0022
018	66601-47230	LABEL FRONT	1				0.02	0.044
019	04013-50040	WASHER PLAIN	4				0	0
020	04512-50040	WASHER SPRING	2				0	0
021	02054-50040	NUT	2				0.001	0.0022
022	66704-47280	LABEL DECOMPRESS	1	<=11600			0	0
022	66706-47270	LABEL DECOMPRESS	1	>=10001			0.001	0.0022
023	66711-47442	LABEL	1	<=11600			0	0
023	66706-47340	LABEL	1	>=10001			0.001	0.0022
024	15232-88230	LABEL BATTERY	1	<=11600			0.002	0.0044
024	66706-47280	LABEL BATTERY	1	>=10001			0.003	0.0066
025	66704-47270	LABEL	1	<=11600			0	0
025	66706-47290	LABEL	1	>=10001			0.009	0.0198
025	66706-47290	LABEL	1	<=16478			0.009	0.0198
025	66706-47293	LABEL	1	>=16479		IRAN OVERSEAS	0.009	0.0198
026	66704-47410	LABEL	1	<=11600		AMERICA CANADA	0.019	0.0418
026	66704-47412	LABEL	1	>=10001		AMERICA CANADA	0	0
026	66704-47412	LABEL	1	<=16478		AMERICA CANADA	0	0
026	66204-47410	LABEL	1	>=10001		AMERICA CANADA	0.02	0.044
027	66601-47420	LABEL	1	<=11600			0.001	0.0022
027	66706-47320	LABEL	1	>=10001			0.001	0.0022
028	66601-47250	LABEL	1	<=11600			0.001	0.0022
028	66706-47370	LABEL	1	>=10001			0.001	0.0022
029	66601-48720	LABEL DIFF.LOCK	1	<=11600			0.001	0.0022
029	66706-47350	LABEL DIFF.LOCK	1	>=10001			0.001	0.0022
030	66706-47420	LABEL FUEL TANK	1	>=10901			0.001	0.0022
031	66706-47460	LABEL CAUTION	1	>=10901		IRAN OVERSEAS	0.002	0.0044
032	35170-18290	LABEL DIESEL	2	>=11601			0.003	0.0066
033	32140-18470	MARK KUBOTA	1	>=11601			0.002	0.0044
034	66894-47460	NAME PLATE	1				0.01	0.022
035	35200-25340	LABEL	1			AMERICA CANADA	0.002	0.0044

silverhorn.co.uk

NAME PLATE GROUP

↔ Interchangeable; ≠ not interchangeable; ← new for old; → old for new

REF.No	Part No.	Description	Q'ty	S.No.	I/C	REMARKS	Weight (kgf)	Weight (lb)
036	35260-34910	LABEL	1			AMERICA CANADA	0	0
037	35260-29780	LABEL ROPS	1			AMERICA CANADA	0	0
038	35260-29790	LABEL	1			AMERICA CANADA	0.002	0.0044

silverhorn.co.uk

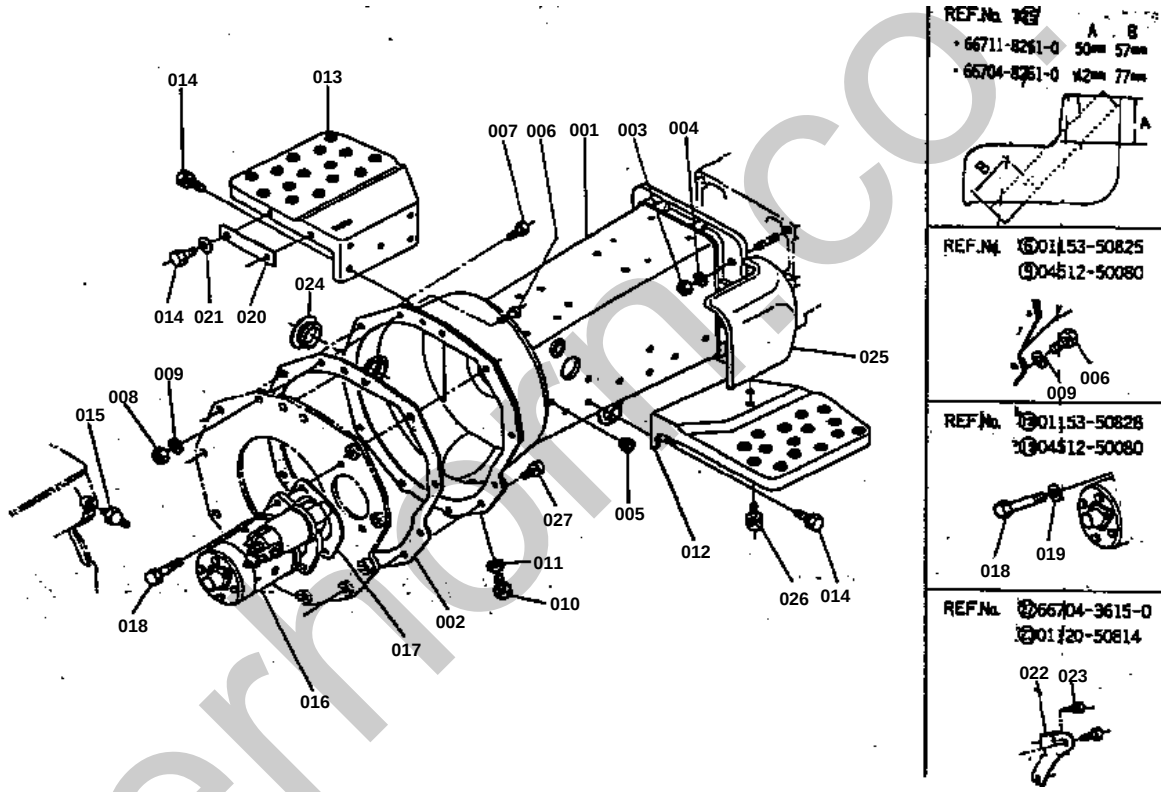

silverhorn.co.uk

CLUTCH HOUSING GROUP

↔ Interchangeable; ≠ not interchangeable; ← new for old; → old for new

REF.No	Part No.	Description	Q'ty	S.No.	I/C	REMARKS	Weight (kgf)	Weight (lb)
001	66704-51110	HOUSING CLUTCH	1				14.5	31.9
002	66621-51410	GASKET	1				0	0
003	02174-50120	NUT	7				0.01	0.022
004	04512-50120	WASHER SPRING	7				0	0
005	66591-54390	PLUG	10				0.001	0.0022
006	01153-50825	BOLT	9				0.012	0.0264
006	01153-50825	BOLT	1				0.012	0.0264
007	01153-50828	BOLT	2				0.014	0.0308
008	02114-50080	NUT	3				0.005	0.011
009	04512-50080	WASHER SPRING	11				0	0
009	04512-50080	WASHER SPRING	3				0	0
010	06331-35010	PLUG	1				0.012	0.0264
011	04717-01000	WASHER SEAL	1				0.001	0.0022
012	66711-51130	STEP LH	1				2.078	4.5716
013	66711-51140	STEP RH	1				1.948	4.2856
014	01120-50818	BOLT	12				0	0
015	15231-39010	SWITCH OIL	1				0	0
016	15231-63010	ASSY STARTER	1				0	0
017	66591-51160	GASKET	1				0	0
018	01153-50828	BOLT	2				0.014	0.0308
018	01123-50828	BOLT	2				0.014	0.0308
019	04512-50080	WASHER SPRING	2				0	0
020	66711-51180	PLATE	1				0.045	0.099
021	04013-50080	WASHER PLAIN	2				0	0
022	66704-36150	HOLDER	1	<=13621		EXCEPT IRAN	0.06	0.132
023	01120-50814	BOLT	1	<=13621		EXCEPT IRAN	0	0
024	66704-51190	CAP	1				0.009	0.0198
025	66711-82610	COVER	1	<=11600			0.24	0.528
025	66704-82610	COVER	1	>=10001			0.205	0.451
026	01120-50814	BOLT	2				0	0
027	01123-50825	BOLT	8				0.013	0.0286

silverhorn.co.uk

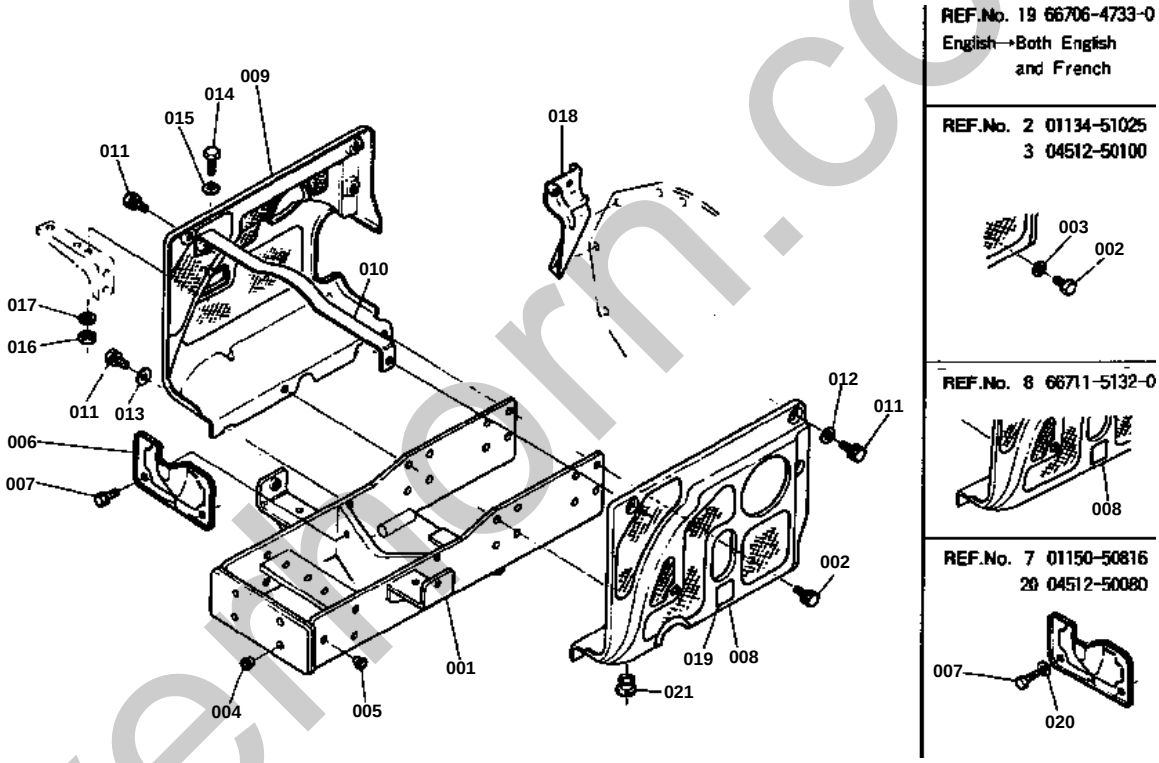

silvermorn.co.uk

FRONT WHEEL SUPPORT GROUP

↔ Interchangeable; ≠ not interchangeable; ← new for old; → old for new

REF.No	Part No.	Description	Q'ty	S.No.	I/C	REMARKS	Weight (kgf)	Weight (lb)
001	66704-51210	SUPPORT FRONT WHEEL	1				17	37.4
002	01173-51025	BOLT	16				0.021	0.0462
002	01133-51025	BOLT	16				0.023	0.0506
003	04512-50100	WASHER SPRING	16				0	0
004	66591-54390	PLUG	8				0.001	0.0022
005	66591-11290	PLUG 2	6				0.001	0.0022
005	67111-11140	PLUG M12	6	>=10001			0	0
005	67211-11140	PLUG M12	6	>=10001			0.001	0.0022
006	66711-51280	COVER FRONT	1				0.081	0.1782
006	66704-51280	COVER FRONT	1	>=10001			0.11	0.242
007	01150-50816	BOLT	2				0.01	0.022
007	01120-50825	BOLT	2	>=10001			0	0
008	66711-51320	COVER SIDE LH	1	<=13621			0.21	0.462
008	66709-51370	COVER SIDE LH	1	>=10001			0.97	2.134
009	66711-51330	COVER SIDE RH	1				1	2.2
010	66711-51380	STAY SIDE COVER	1				0.215	0.473
011	01202-50614	BOLT	8				0.006	0.0132
012	04013-50060	WASHER PLAIN	4				0	0
013	04015-50060	WASHER PLAIN	2				0	0
014	01150-50818	BOLT	1				0	0
015	04013-50080	WASHER PLAIN	1				0	0
016	02114-50080	NUT	1				0.005	0.011
017	04512-50080	WASHER SPRING	1				0	0
018	66711-51350	STAY FILTER	1				0.146	0.3212
019	66704-47430	LABEL	1	<=11600			0	0
019	66706-47330	LABEL	1	>=10001			0.001	0.0022
020	04512-50080	WASHER SPRING	2				0	0
021	66591-54580	RUBBER	1				0.003	0.0066

silverhorn.co.uk

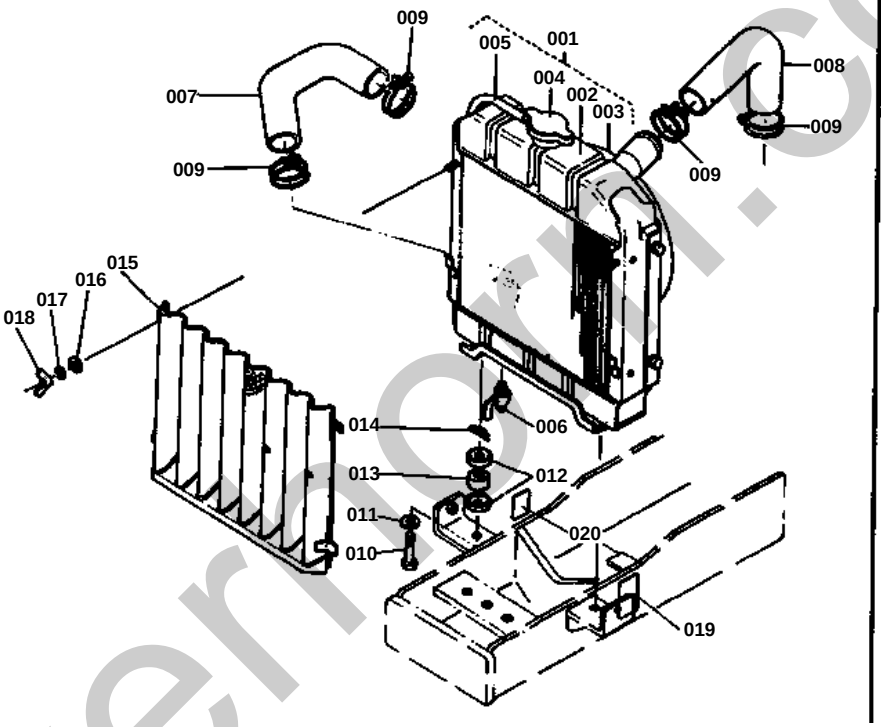

REF.No. 19 66706-5881-0
20 66706-5882-0
English→Both English and French

silvermoor.co.uk

↔ Interchangeable; ≠ not interchangeable; ← new for old; → old for new

REF.No	Part No.	Description	Q'ty	S.No.	I/C	REMARKS	Weight (kgf)	Weight (lb)
001	15371-72060	ASSY RADIATOR	1			REF.No.002 TO 005	6	13.2
002	99999-99999	BLANK	0			ORDER BY REF.No.001	0	0
003	15371-74470	COVER FAN	1				0.4	0.88
004	15101-72030	CAP RADIATOR	1				0.075	0.165
005	15371-72710	PIPE WATER OVER FLOW	1				0.048	0.1056
005	15401-72710	PIPE WATER OVER FLOW	1	>=10001			0.032	0.0704
006	14301-73110	COCK DRAIN	1				0.094	0.2068
007	15371-72850	PIPE WATER 1	1				0.21	0.462
008	15371-72940	FIPE WATER 4	1				0.164	0.3608
009	15108-72870	BAND	4				0.027	0.0594
010	66711-51340	BOLT RADIATOR STOP.	2				0.032	0.0704
011	04013-50100	WASHER PLAIN	2				0	0
012	15111-72200	WASHER	4				0.013	0.0286
013	15111-72180	CUSHION	2				0.015	0.033
014	05515-51000	PIN SNAP	2				0	0
015	66711-51410	NET RADIATOR	1				0	0
016	04013-50060	WASHER PLAIN	2				0	0
017	04512-50060	WASHER SPRING	2				0	0
018	66621-55440	NUT WING	2				0.006	0.0132
019	15101-94610	LABEL RADIATOR	1	<=11600			0.002	0.0044
019	66706-58810	LABEL RADIATOR	1	>=10001			0.001	0.0022
020	15103-94590	LABEL	1	<=11600			0.001	0.0022
020	66706-58820	LABEL	1	>=10001			0.001	0.0022

silverhorn.co.uk

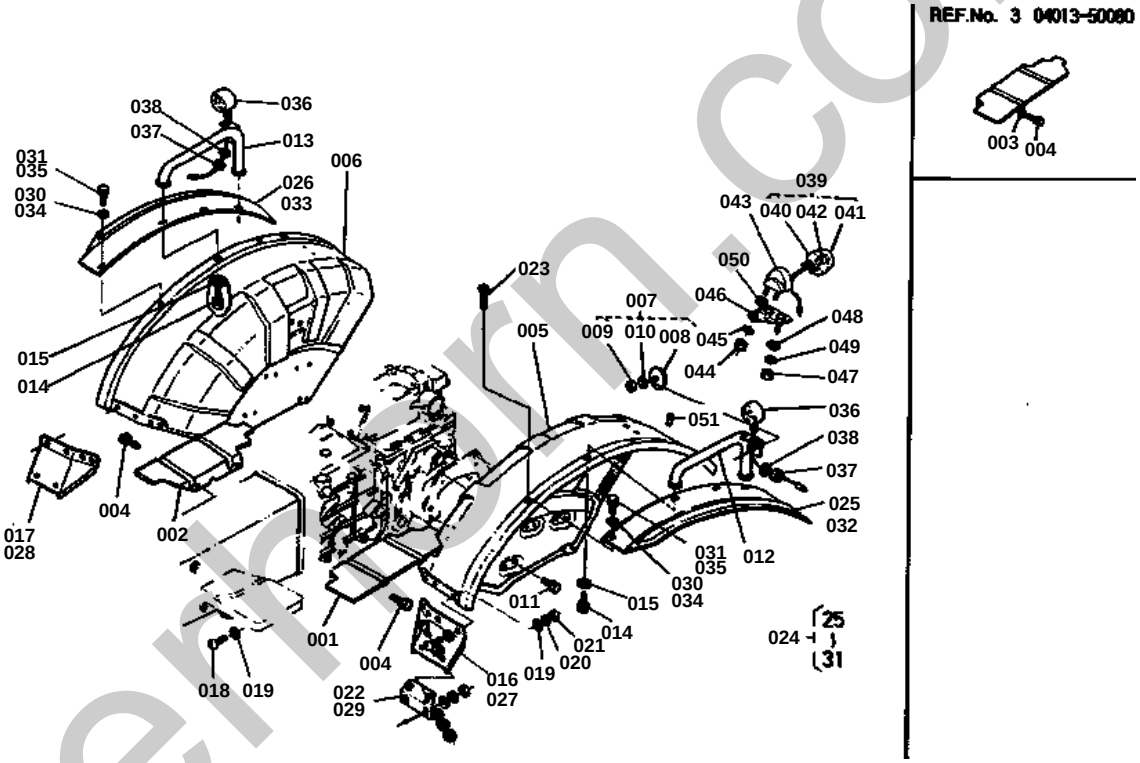

silverthorn.co.uk

↔ Interchangeable; ≠ not interchangeable; ← new for old; → old for new

REF.No	Part No.	Description	Q'ty	S.No.	I/C	REMARKS	Weight (kgf)	Weight (lb)
001	66611-52610	COVER LH	1				0.45	0.99
002	66611-52623	COVER RH	1				0.438	0.9636
003	04013-50080	WASHER PLAIN	4				0	0
004	01120-50816	BOLT	4				0	0
004	01120-50818	BOLT	4	>=10001			0	0
005	66711-52710	FENDER LH	1	<=16478		AMERICA CANADA	6.3	13.86
005	66706-52710	FENDER LH	1	>=10001		AMERICA CANADA	3.8	8.36
006	66711-52720	FENDER RH	1	<=16478		AMERICA CANADA	6.2	13.64
006	66706-52720	FENDER RH	1	>=10001		AMERICA CANADA	3.6	7.92
007	66591-52300	ASSY REFLECTOR	2			REF.No.008 TO 010	0.006	0.0132
008	53143-61240	REFLECTOR	2				0.009	0.0198
009	02054-50050	NUT	2				0.002	0.0044
010	04512-50050	WASHER SPRING	2				0	0
011	01120-50818	BOLT	8				0	0
012	66611-52750	BALUSTRADE LH	1				0.264	0.5808
013	66611-52760	BALUSTRADE RH	1				0.258	0.5676
014	01120-50820	BOLT	4				0	0
015	04013-50080	WASHER PLAIN	4				0	0
016	66751-51150	PLATE SUB LH	1			EXCEPT B6100E CANADA	0.147	0.3234
016	66751-51150	PLATE SUB LH	1	<=16238		B6100E CANADA	0.147	0.3234
016	66711-51150	PLATE SUB LH	1	>=16239		B6100E CANADA	0.143	0.3146
017	66751-51160	PLATE SUB RH	1			EXCEPT B6100E CANADA	0.147	0.3234
017	66751-51160	PLATE SUB RH	1	<=16238		B6100E CANADA	0.147	0.3234
017	66711-51160	PLATE SUB RH	1	>=16239		B6100E CANADA	0.135	0.297
018	03014-50614	SCREW	16				0.003	0.0066
019	04013-50060	WASHER PLAIN	32				0	0
020	04512-50060	WASHER SPRING	16				0	0
021	02014-50060	NUT	16				0.003	0.0066
022	66751-51170	STAY	2			EXCEPT B6100E CANADA	0	0
022	66751-51170	STAY	2	<=16238		B6100E CANADA	0	0
022	66711-51170	STAY	2	>=16239		B6100E CANADA	0.044	0.0968
024	66804-62900	KIT EXTENTION FENDER	1			REF.No.025 TO 031 B6100E AMERICA	1.7	3.74
025	66611-52732	FENDER EXTENTION LH	1			B6100E AMERICA	0.626	1.3772
026	66611-52742	FENDER EXTENTION RH	1			B6100E AMERICA	0.65	1.43
027	66711-51150	PLATE SUB LH	1			B6100E AMERICA	0.143	0.3146
028	66711-51160	PLATE SUB RH	1			B6100E AMERICA	0.135	0.297
029	66711-51170	STAY	2			B6100E AMERICA	0.044	0.0968
030	04013-50060	WASHER PLAIN	6			B6100E AMERICA	0	0
031	01202-50612	BOLT	6			B6100E AMERICA	0.005	0.011
032	66611-52732	FENDER EXTENTION LH	1	>=16329		B6100E CANADA	0.626	1.3772
033	66611-52742	FENDER EXTENTION RH	1	>=16329		B6100E CANADA	0.65	1.43
034	04013-50060	WASHER PLAIN	6	>=16329		B6100E CANADA	0	0
035	01202-50614	BOLT	6	>=16329		B6100E CANADA	0.006	0.0132
036	67111-55470	ASSY LAMP FLASHER	2				0	0
037	02114-50080	NUT	2			AMERICA CANADA	0.005	0.011
038	04512-50080	WASHER SPRING	2			AMERICA CANADA	0	0
039	66704-55520	ASSY LAMP TAIL	1			REF.No.040 TO 042 AMERICA CANADA	0.11	0.242
040	66704-55540	BODY TAIL LAMP	1			AMERICA CANADA	0.06	0.132
041	66704-55550	LENS TAIL LAMP	1			AMERICA CANADA	0.045	0.099

silverhorn.co.uk

↔ Interchangeable; ≠ not interchangeable; ← new for old; → old for new

REF.No	Part No.	Description	Q'ty	S.No.	I/C	REMARKS	Weight (kgf)	Weight (lb)
042	66704-55560	BULB TAIL LAMP	1			AMERICA CANADA	0.007	0.0154
043	34350-34190	BRACKET TAIL LAMP	1			AMERICA CANADA	0.107	0.2354
044	02014-50060	NUT	2			AMERICA CANADA	0.003	0.0066
045	04512-50060	WASHER SPRING	2			AMERICA CANADA	0	0
046	66704-55530	STAY TAIL LAMP	1			AMERICA CANADA	0	0
047	02014-50060	NUT	2			AMERICA CANADA	0.003	0.0066
048	04015-50060	WASHER PLAIN	2			AMERICA CANADA	0	0
049	04512-50060	WASHER SPRING	2			AMERICA CANADA	0	0
050	66591-54580	RUBBER	1			AMERICA CANADA	0.003	0.0066
051	63763-52580	RUBBER	6				0.001	0.0022

silverhorn.co.uk

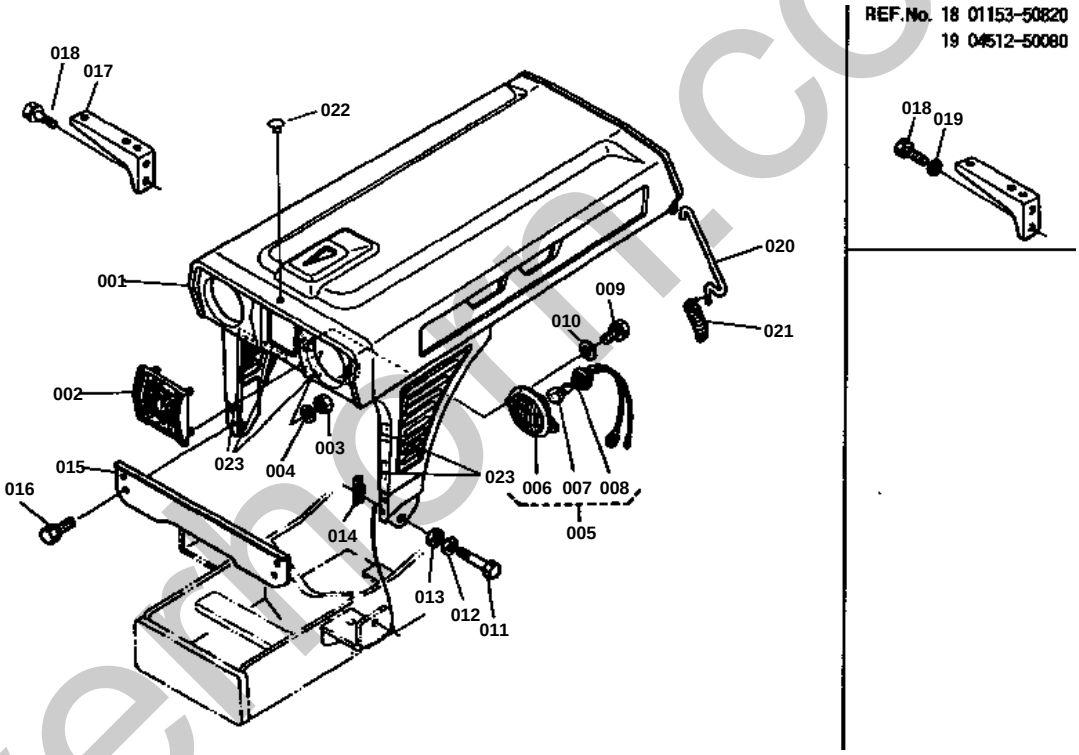

silvermoor.co.uk

BONNET GROUP

↔ Interchangeable; ≠ not interchangeable; ← new for old; → old for new

REF.No	Part No.	Description	Q'ty	S.No.	I/C	REMARKS	Weight (kgf)	Weight (lb)
001	66711-54110	BONNET	1				9.2	20.24
002	66711-54140	MASCOT	1				0.09	0.198
003	02014-50060	NUT	4				0.003	0.0066
004	04512-50060	WASHER SPRING	4				0	0
005	66711-54120	ASSY LAMP HEAD	2			REF.No.006 TO 008	0.15	0.33
006	66591-55610	LAMP HEAD	2				0.15	0.33
007	66711-54130	SOCKET	2				0.016	0.0352
008	66591-55630	BULB	2				0.008	0.0176
009	01202-50612	BOLT	4				0.005	0.011
010	04013-50060	WASHER PLAIN	4				0	0
011	66711-54150	BOLT BONNET STOPPER	2				0.026	0.0572
012	04015-50100	WASHER PLAIN	2				0.016	0.0352
013	34150-18180	CUSHION	2				0.003	0.0066
014	05515-51000	PIN SNAP	2				0	0
015	66711-54210	STAY BONNET	1				0.27	0.594
016	01120-50816	BOLT	4				0	0
017	66711-54310	STAY AIR CLEANER	1			EXCEPT OVERSEAS	0.306	0.6732
017	15000-36940	STAY AIR CLEANER	1			OVERSEAS	0.3	0.66
018	01153-50820	BOLT	2				0.012	0.0264
018	01123-50820	BOLT	2				0.011	0.0242
019	04512-50080	WASHER SPRING	2				0	0
020	66751-55210	HOOK BONNET	2				0.04	0.088
021	66711-55220	SPRING	2				0.01	0.022
022	63763-52580	RUBBER	1				0.001	0.0022
023	66611-55190	CLAMP CORD	5	<=13311			0.001	0.0022
023	66611-55190	CLAMP CORD	6	>=10001			0.001	0.0022

silverhorn.co.uk

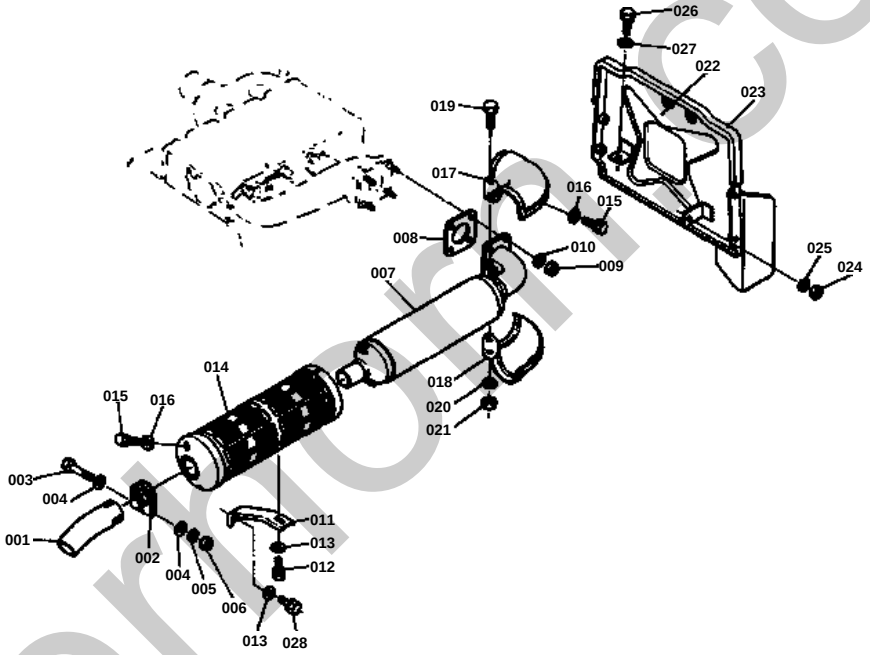

silvermoto.co.uk

MUFFLER GROUP

↔ Interchangeable; ≠ not interchangeable; ← new for old; → old for new

REF.No	Part No.	Description	Q'ty	S.No.	I/C	REMARKS	Weight (kgf)	Weight (lb)
001	66711-54410	PIPE MUFFLER	1			EXCEPT IRAN	0.137	0.3014
001	66711-82510	PIPE MUFFLER	1			IRAN	0.58	1.276
002	66711-54420	BAND MUFFLER	1				0.038	0.0836
003	01150-50865	BOLT	1				0	0
004	04013-50080	WASHER PLAIN	2				0	0
005	04512-50080	WASHER SPRING	1				0	0
006	02114-50080	NUT	1				0.005	0.011
007	15371-12110	MUFFLER	1				0	0
007	66706-54510	MUFFLER	1	>=10001			2.8	6.16
008	15371-12370	GASKET MUFFLER	1				0	0
009	02114-50080	NUT	4				0.005	0.011
010	04512-50080	WASHER SPRING	4				0	0
011	66711-54530	STAY MUFFLER	1				0.096	0.2112
012	01120-50814	BOLT	1				0	0
013	04013-50080	WASHER PLAIN	2				0	0
014	66711-54520	COVER MUFFLER	1				0.878	1.9316
015	01202-50612	BOLT	4				0.005	0.011
016	04013-50060	WASHER PLAIN	4				0	0
017	66711-54550	COVER MUFF.FLANGE LH	1				0.137	0.3014
018	66711-54560	COVER MUFF.FLANGE RH	1				0.135	0.297
019	01050-50628	BOLT	2				0	0
020	04512-50060	WASHER SPRING	2				0	0
021	02014-50060	NUT	2				0.003	0.0066
022	66711-54610	COVER	1				1.066	2.3452
023	66711-54620	TAPE	1				0.005	0.011
024	02114-50080	NUT	1				0.005	0.011
025	04512-50080	WASHER SPRING	1				0	0
026	01120-50816	BOLT	1				0	0
026	01120-50818	BOLT	1	>=10001			0	0
027	04013-50080	WASHER PLAIN	1				0	0
028	01120-50818	BOLT	1				0	0

silverhorn.co.uk

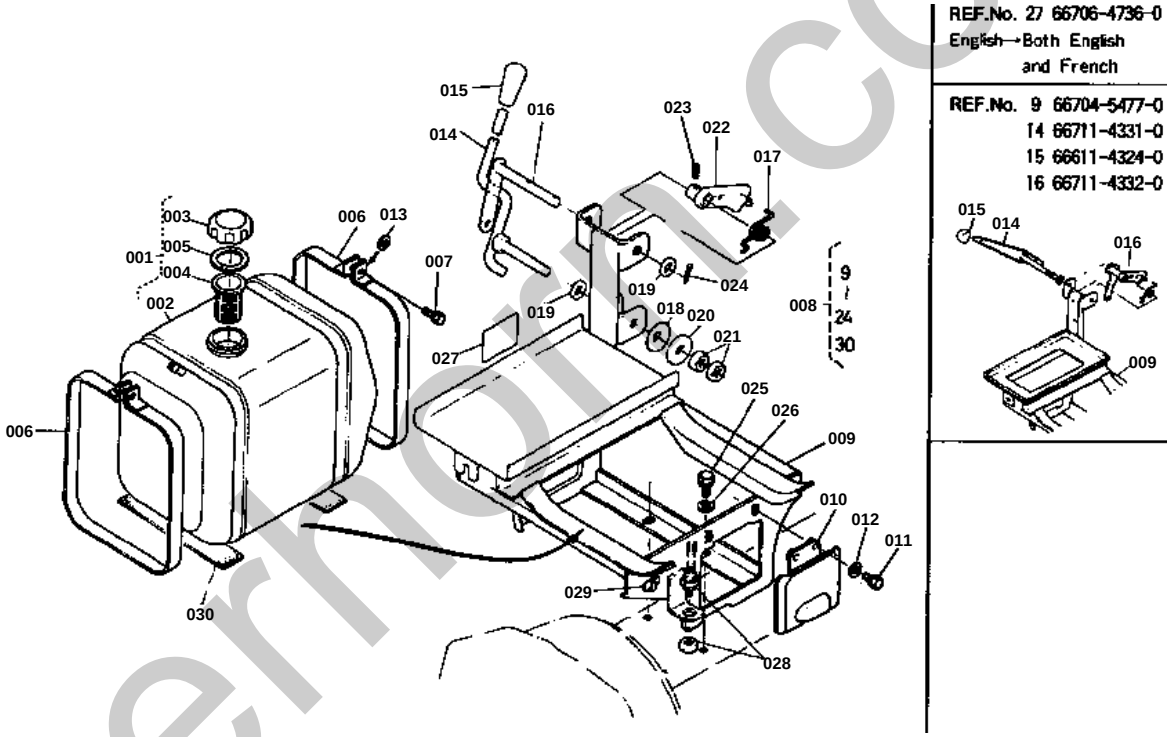

silverhorn.co.uk

FUEL TANK GROUP

↔ Interchangeable; ≠ not interchangeable; ← new for old; → old for new

REF.No	Part No.	Description	Q'ty	S.No.	I/C	REMARKS	Weight (kgf)	Weight (lb)
001	66711-54700	ASSY TANK FUEL	1			REF.No.002 TO 005	0	0
002	99999-99999	BLANK	0			ORDER BY REF.No.001	0	0
003	66621-54820	ASSY CAP FUEL	1				0.028	0.0616
004	13251-41060	FILTER	1				0.01	0.022
005	10211-41340	GASKET	1				0.003	0.0066
006	66711-54760	BAND FUEL TANK	2				0	0
007	01120-50830	BOLT	2				0	0
008	66704-54800	ASSY BRAC.TANK BATT.	1	<=16478		REF.No.009 TO 024 AND 030	5	11
008	66704-54700	ASSY BRAC.TANK BATT.	1	>=16479		REF.No.009 TO 024 AND 030	4.5	9.9
009	66704-54770	BLACKET TANK BATTERY	1	<=16478			3.5	7.7
009	66704-54710	BLACKET TANK BATTERY	1	>=16479			4	8.8
010	66571-54520	CAP SIDE	1				0.085	0.187
011	01202-50612	BOLT	2				0.005	0.011
012	04013-50060	WASHER PLAIN	2				0	0
013	04013-50080	WASHER PLAIN	2				0	0
014	66711-43310	LEVER RELEASE	1	<=16478			0.22	0.484
014	66704-43340	LEVER RELEASE	1	>=16479			0.2	0.44
015	66611-43240	GRIP LEVER	1	<=16478			0.018	0.0396
015	06914-00100	GRIP LEVER	1	>=16479			0.02	0.044
016	66711-43320	ARM RELEASE	1	<=16478			0.144	0.3168
016	66704-43320	ARM RELEASE	1	>=16479			0.1	0.22
017	66711-43330	SPRING RELEASE	1				0.01	0.022
018	32210-17190	SPRING	1				0.005	0.011
019	04011-50100	WASHER PLAIN	1	<=16478			0.002	0.0044
019	04011-50100	WASHER PLAIN	2	>=16479			0.002	0.0044
020	04015-50100	WASHER PLAIN	1				0.016	0.0352
021	02116-50100	NUT	2				0.004	0.0088
022	66704-43350	LEVER ENGINE STOP	1	>=16479			0.07	0.154
023	05411-00314	PIN SRPING	1	>=16479			0.001	0.0022
023	66704-43360	PIN SPRING	1	>=10001			0.005	0.011
024	05511-50320	PIN SPLIT	1	>=16479			0.002	0.0044
025	01120-50816	BOLT	4				0	0
026	04013-50080	WASHER PLAIN	4				0	0
027	66601-48640	LABEL BRAKE	1	<=11600			0.001	0.0022
027	66706-47360	LABEL BRAKE	1	>=10001			0.002	0.0044
028	37150-32240	SWITCH SAFETY	1				0.12	0.264
029	66611-55190	CLAMP CORD 2	1				0.001	0.0022
030	66641-54740	CUSHION	2				0.065	0.143

silverhorn.co.uk

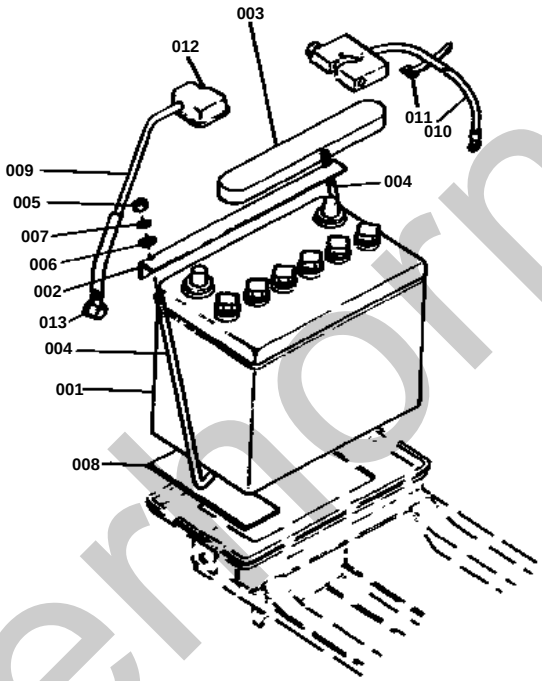

REF.No. 11 66711-5547-0
Changed Material

REF.No. 12 66704-5527-0
Reinforced

REF.No. 9 66704-5546-0

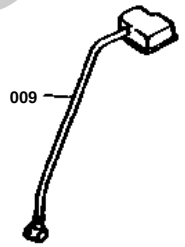

REF.No. 12 66704-5527-0
Unit : 2→1

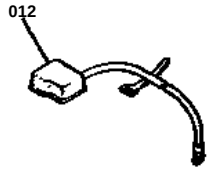

silvermorn.co.uk

↔ Interchangeable; ≠ not interchangeable; ← new for old; → old for new

REF.No	Part No.	Description	Q'ty	S.No.	I/C	REMARKS	Weight (kgf)	Weight (lb)
001	66704-55430	BATTERY	1				9.3	20.46
002	66591-54480	RETAINER BATTERY	1				0	0
002	66704-54482	RETAINER BATTERY	1	>=10001			0.14	0.308
003	66641-55430	COVER BATTERY	1				0.07	0.154
004	66591-54490	BOLT	2				0.048	0.1056
005	02014-50060	NUT	2				0.003	0.0066
006	04013-50060	WASHER PLAIN	2				0	0
007	04512-50060	WASHER SPRING	2				0	0
008	66591-54510	CUSHION BATTERY	2				0.02	0.044
009	66704-55450	CORD BATTERY	1				0	0
009	66709-55450	CORD BATTERY	1	>=10001			0.25	0.55
010	66704-55460	CORD BATTERY	1				0.165	0.363
011	14301-69290	BAND PIPE	1				0.001	0.0022
011	34350-29380	CLAP CORD	1	>=10001			0.001	0.0022
012	66571-55170	CAP TERMINAL	2				0	0
012	66704-55270	CAP TERMINAL	2	>=10001			0.015	0.033
012	66704-55270	CAP TERMINAL	1	>=10001			0.015	0.033
013	66591-55190	CAP TERMINAL	1				0.012	0.0264

silverhorn.co.uk

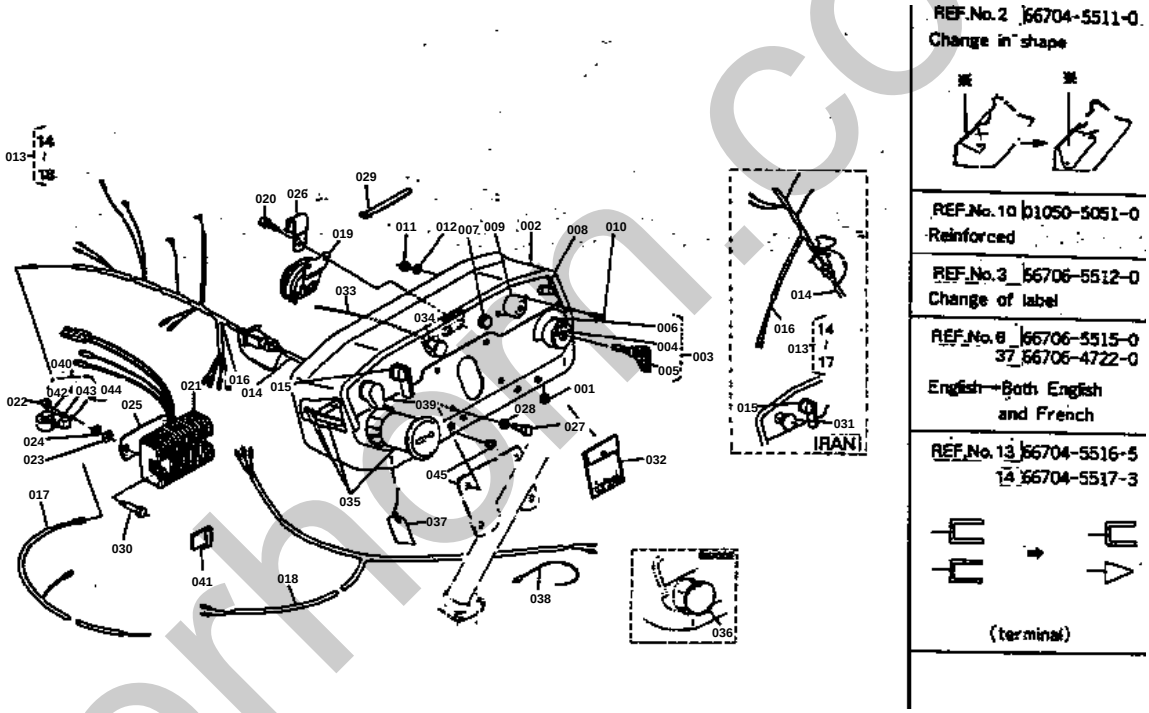

silverhorn.co.uk

↔ Interchangeable; ≠ not interchangeable; ← new for old; → old for new

REF.No	Part No.	Description	Q'ty	S.No.	I/C	REMARKS	Weight (kgf)	Weight (lb)
001	35110-32420	PLUG	2				0.002	0.0044
002	66711-55114	PANEL	1	<=10600			0	0
002	66704-55112	PANEL	1	>=10001			0	0
003	66704-55120	ASSY SWITCH STARTER	1	<=11600		REF.No.004 TO 006	0.25	0.55
003	66706-55120	ASSY SWITCH STARTER	1	>=10001		REF.No.004 TO 006	0.256	0.5632
004	66711-55130	SWITCH STARTER	1				0.241	0.5302
005	66711-55140	KEY	1			SET	0	0
006	66704-55150	LABEL STARTER SWITCH	1	<=11600			0	0
006	66706-55150	LABEL STARTER SWITCH	1	>=10001			0.001	0.0022
007	66711-55290	ASSY LAMP OIL	1				0.016	0.0352
008	32150-32240	SWITCH HORN	1	<=13621			0.013	0.0286
008	54711-41830	SWITCH HORN	1	>=10001			0.014	0.0308
009	15231-65950	LAMP GLOW	1				0.045	0.099
010	03054-50512	SCREW	2				0.003	0.0066
010	01050-50512	BOLT	2				0.003	0.0066
011	02054-50050	NUT	2				0.002	0.0044
012	04512-50050	WASHER SPRING	2				0	0
013	66704-55160	ASSY WIRE HARNESS	1	<=12666		REF.No.014 TO 018 AMERICA CANADA	0.5	1.1
013	66704-55165	ASSY WIRE HARNESS	1	>=12667		REF.No.014 TO 018 AMERICA CANADA	0.49	1.078
013	66704-55160	ASSY WIRE HARNESS	1	<=16478		REF.No.014 TO 018 AMERICA CANADA	0.5	1.1
013	66704-55660	ASSY WIRE HARNESS	1	>=10001		REF.No.014 TO 018 AMERICA CANADA	0.6	1.32
014	66704-55170	WIRE HARNESS 1	1	<=12666		AMERICA CANADA	0.266	0.5852
014	66704-55173	WIRE HARNESS 1	1	>=12667		AMERICA CANADA	0.266	0.5852
014	66704-55170	WIRE HARNESS 1	1	<=16478		AMERICA CANADA	0.266	0.5852
014	66204-55170	WIRE HARNESS 1	1	>=10001		AMERICA CANADA	0.285	0.627
015	66621-55190	SWITCH LIGHTING	1				0.067	0.1474
016	66704-55180	WIRE HARSESS 2	1			IRAN OVERSEAS	0.196	0.4312
016	66704-55180	WIRE HARSESS 2	1	<=16478		AMERICA CANADA	0.196	0.4312
016	66204-55182	WIRE HARNESS 2	1	>=10001		AMERICA CANADA	0.2	0.44
017	66711-55190	WIRE HARNESS 3	1				0.017	0.0374
018	66704-55190	WIRE HARNESS 4	1	>=16479		AMERICA CANADA	0.075	0.165
019	66591-55300	ASSY HORN	1				0.15	0.33
020	01202-50612	BOLT	2				0.005	0.011
021	15372-64600	REGULATOR	1				0.22	0.484
022	02014-50060	NUT	2				0.003	0.0066
023	04013-50060	WASHER PLAIN	2				0	0
024	04512-50060	WASHER SPRING	2				0	0
025	66704-55260	CUSHION	1				0.009	0.0198
026	13313-69750	ASSY CLAMP CORD	1				0	0
027	01120-50818	BOLT	4				0	0
028	04013-50080	WASHER PLAIN	4				0	0
029	14301-69290	BAND	2				0.001	0.0022
029	34350-29380	CLAMP CORD	2	>=10001			0.001	0.0022
029	34350-29380	CLAMP CORD	1				0.001	0.0022
030	01050-50640	BOLT	2				0	0
031	34159-34290	CAP PANEL	1			AMERICA CANADA	0.004	0.0088
032	66591-55520	ASSY FUSE	1				0.004	0.0088
033	66711-43510	WIRE DECOMPRESS	1				0.093	0.2046

silverthorn.co.uk

↔ Interchangeable; ≠ not interchangeable; ← new for old; → old for new

REF.No	Part No.	Description	Q'ty	S.No.	I/C	REMARKS	Weight (kgf)	Weight (lb)
034	04011-50100	WASHER PLAIN	1				0.002	0.0044
036	66894-55230	PLUG	1				0.014	0.0308
038	66704-55510	BAND	1			AMERICA CANADA	0.002	0.0044
039	55311-41120	SWITCH	1			AMERICA CANADA	0.05	0.11
040	66204-55810	UNIT	1	>=16479		AMERICA CANADA	0	0
040	66204-55812	UNIT	1	>=10001		REF.No.042 AND 043 AMERICA CANADA	0.06	0.132
041	66706-55220	CLAMP	10			AMERICA CANADA	0.002	0.0044
042	66204-55830	BODY	1			AMERICA CANADA	0.5	1.1
043	66204-55840	BAND	1			AMERICA CANADA	0.006	0.0132
044	66204-55820	STAY	1			AMERICA CANADA	0.01	0.022
045	63763-52580	RUBBER	2	<=17634			0.001	0.0022
045	13151-67160	PLUG	2	>=17635			0.01	0.022

silverhorn.co.uk

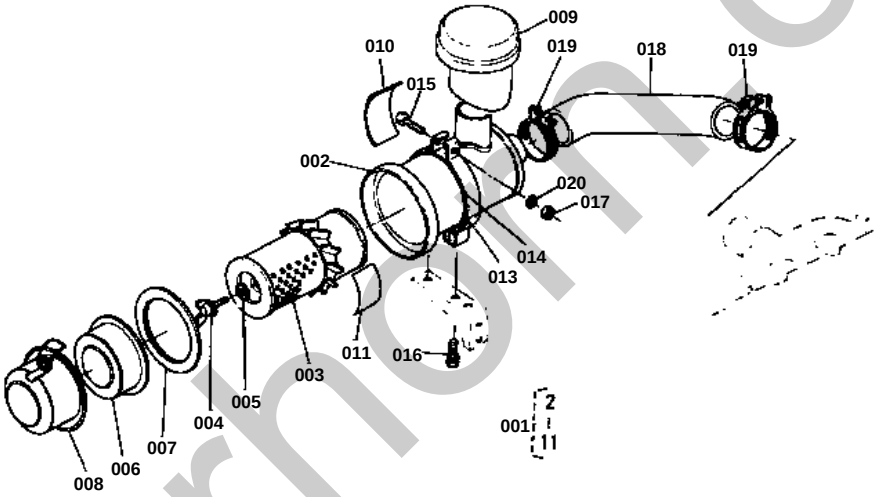

REF.No. 10 15372-8745-0
English × Japanese
⬇
English × French

REF.No. 12 15221-8777-0

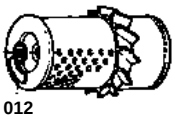

Discontinuance
~19430 B6100D-P
~10900 B6100E-P

REF.No. 1 15372-1101-4
10 15372-8745-2

Change of LABEL

silvermoon.co.uk

AIR CLEANER GROUP EXCEPT[OVERSEAS]

↔ Interchangeable; ≠ not interchangeable; ← new for old; → old for new

REF.No	Part No.	Description	Q'ty	S.No.	I/C	REMARKS	Weight (kgf)	Weight (lb)
001	15372-11010	ASSY AIR CLEANER	1	<=10900		REF.No.002 TO 012	0	0
001	15372-11013	ASSY AIR CLEANER	1	<=12665		REF.No.002 TO 011	0	0
001	15372-11014	ASSY AIR CLEANER	1	>=10001			0	0
002	15241-11150	BODY AIR CLEANER	1				0.69	1.518
003	15222-11220	ELEMENT AIR CLEANER	1				0.344	0.7568
004	15221-92620	BOLT WING	1				0.04	0.088
005	15221-94430	WASHER SEAL	1				0.004	0.0088
006	15221-11410	COVER BAFFLE	1				0.104	0.2288
007	15221-11170	GASKET COVER	1				0.01	0.022
008	15241-11160	COVER AIR CLEANER	1				0.255	0.561
009	15241-11350	CAP AIR CLEANER	1				0.48	1.056
010	15221-87450	LABEL AIR CLEANER	1	<=10900			0.001	0.0022
010	15372-87450	LABEL AIR CLEANER	1	<=12665			0	0
010	15372-87452	LABEL AIR CLEANER	1	>=10001			0.001	0.0022
011	15227-87480	LABEL A/C ELEMENT	1				0.004	0.0088
012	15221-87770	MARK	1	<=10900			0	0
013	15371-11250	BAND AIR CLEANER	1				0	0
014	15371-11870	CUSHION	1				0.025	0.055
015	01222-50830	BOLT	1				0.013	0.0286
016	01120-50816	BOLT	2				0	0
017	02114-50080	NUT	1				0.005	0.011
018	15371-11620	PIPE INLET	1				0.2	0.44
019	15221-11720	BAND PIPE	2				0.03	0.066
020	04512-50080	WASHER SPRING	1				0	0

silverhorn.co.uk

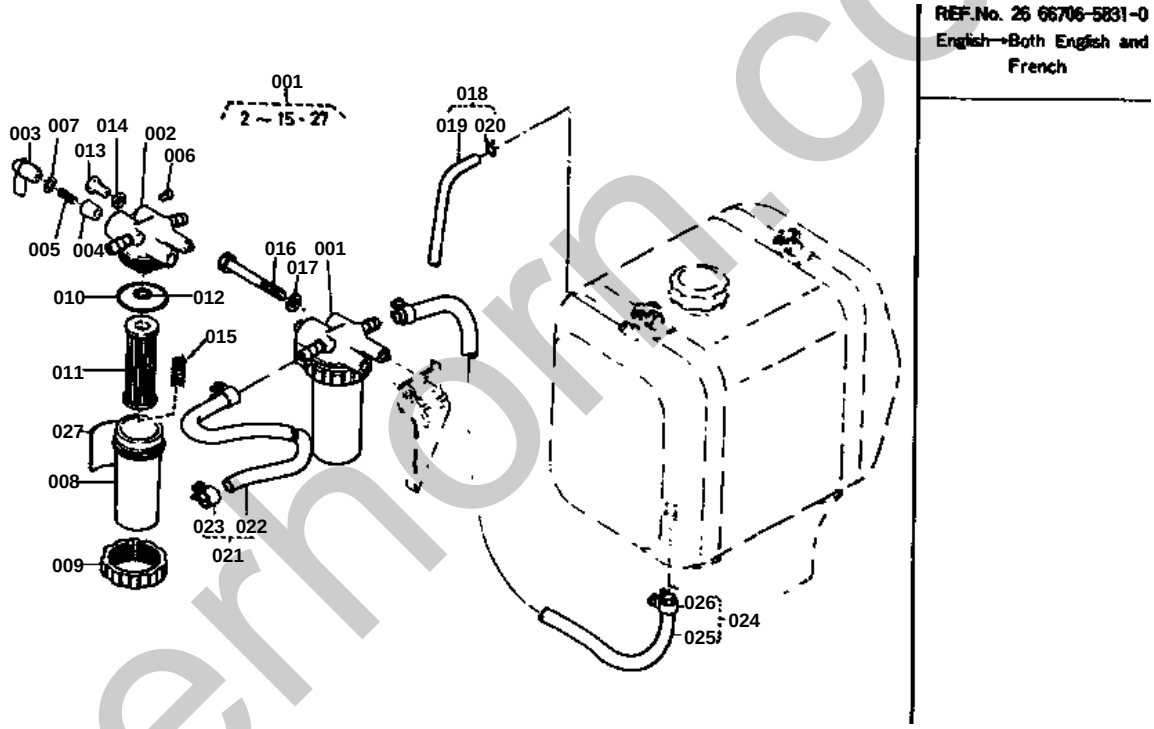

silvermorn.co.uk

FUEL FILTER GROUP

↔ Interchangeable; ≠ not interchangeable; ← new for old; → old for new

REF.No	Part No.	Description	Q'ty	S.No.	I/C	REMARKS	Weight (kgf)	Weight (lb)
001	15261-43010	ASSY FILTER FUEL	1			REF.No.002 TO 014	0	0
001	19204-43010	ASSY FILTER FUEL	1	>=10001		REF.No.002 TO 014 AND 027	0.37	0.814
001	15372-43010	ASSY FILTER FUEL	1	>=10001		REF.No.002 TO 015 AND 027	0	0
002	99999-99999	BLANK	0			ORDER BY REF.No.001	0	0
003	14301-43520	LEVER COCK	1				0	0
004	15231-43810	VALVE TAPER	1				0.002	0.0044
005	14301-43820	SPRING VALVE	1				0.001	0.0022
006	14301-43830	SCREW LEVER	1				0.001	0.0022
007	14301-43840	O RING IEVER	1				0.001	0.0022
008	15231-43580	CUP FILTER	1				0	0
008	15000-34830	CUP FILTER	1				0	0
009	14301-43590	RETERING RING	1				0.054	0.1188
010	14301-43650	O RING FILTER	1				0.001	0.0022
011	15231-43560	ASSY ELEMENT	1				0.03	0.066
012	04811-00100	O RING FILTER	1				0.001	0.0022
013	15231-43282	PLUG BREATHER	2				0.004	0.0088
014	04810-00060	O RING	2				0.001	0.0022
015	15000-34840	SPRING	1				0.003	0.0066
016	01150-50865	BOLT	1				0	0
017	04512-50080	WASHER SPRING	1				0	0
018	15371-42050	ASSY PIPE FUEL O/F	1			REF.No.019 AND 020	0.016	0.0352
019	99999-99999	BLANK	0			ORDER BY REF.No.018	0	0
020	10244-42320	CLIP PIPE	2				0.001	0.0022
021	15371-42020	ASSY PIPE FUEL 1	1			REF.No.022 AND 023	0.034	0.0748
022	99999-99999	BLANK	0			ORDER BY REF.No.021	0	0
023	14301-42750	CLIP PIPE	2				0.005	0.011
024	15371-42030	ASSY PIPE FUEL 2	1			REF.No.025 AND 026	0	0
025	99999-99999	BLANK	0			ORDER BY REF.No.024	0	0
026	14301-42750	CLIP PIPE	2				0.005	0.011
027	15567-87460	LABEL	1	<=11600			0.001	0.0022
027	66706-58310	LABEL	1	>=10001			0.001	0.0022

silverhorn.co.uk

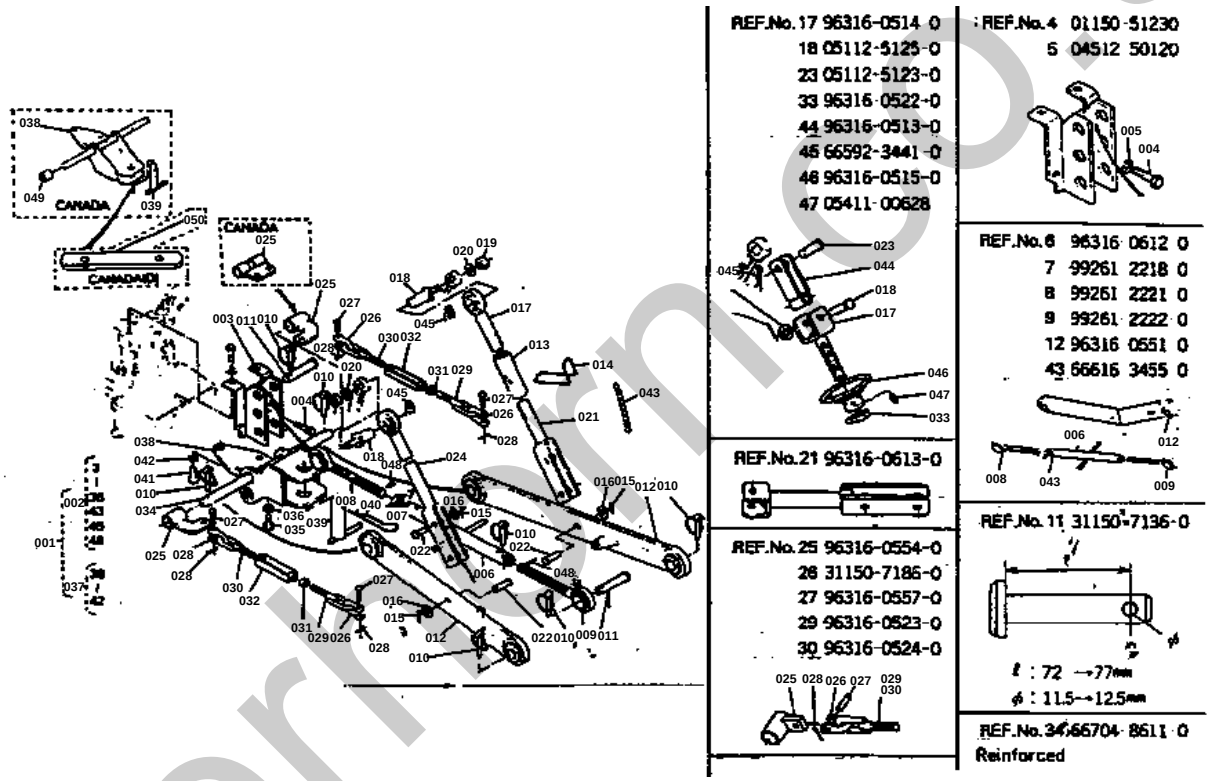

silverline.co.uk

↔ Interchangeable; ≠ not interchangeable; ← new for old; → old for new

REF.No	Part No.	Description	Q'ty	S.No.	I/C	REMARKS	Weight (kgf)	Weight (lb)
001	96316-06013	ASSY 3-P.LINK.HITCH	1	<=11600		REF.No.002 037 EXCEPT CANADA	25.5	56.1
001	66706-65102	ASSY 3-P.LINK.HITCH	1	>=11601		REF.No.002 037 EXCEPT CANADA	26.8	58.96
001	96316-06013	ASSY 3-P.LINK.HITCH	1	<=11600		REF.No.002 037 CANADA	25.5	56.1
001	66706-65102	ASSY 3-P.LINK.HITCH	1	>=11601		REF.No.002 037 CANADA	26.8	58.96
001	66204-65100	ASSY 3-P.LINK.HITCH	1			REF.No.002 037 CANADA	28	61.6
002	96316-00810	ASSY LINK 3-P.LINK	1	<=11600		REF.No.003 TO 036 043 045 AND 048 EXCEPT	22.6	49.72
002	66706-65202	ASSY LINK 3-P.LINK	1	<=15541		REF.No.003 TO 036 043 045 AND 048 EXCEPT	22	48.4
002	66706-65203	ASSY LINK 3-P.LINK	1	>=10001		REF.No.003 TO 036 043 045 AND 048 EXCEPT	0	0
002	96316-00810	ASSY LINK 3-P.LINK	1	<=11600		REF.No.003 TO 036 043 045 048 AND 049 CA	22.6	49.72
002	66706-65202	ASSY LINK 3-P.LINK	1	<=15541		REF.No.003 TO 036 043 045 048 AND 049 CA	22	48.4
002	66706-65203	ASSY LINK 3-P.LINK	1	>=10001		REF.No.003 TO 036 043 045 048 AND 049 CA	0	0
002	66204-65200	ASSY LINK 3-P.LINK	1			REF.No.003 TO 036 043 045 048 AND 049 CA	22	48.4
003	96316-06110	BRACKET	1				1.22	2.684
004	01150-51230	BOLT	2				0.036	0.0792
004	01123-51230	BOLT	2				0.04	0.088
005	04512-50120	WASHER SPRING	2				0	0
006	96316-06120	LINK TOP	1	<=11600			0.64	1.408
006	66706-65330	LINK TOP	1	>=11601			0	0
007	99261-22180	NUT TOP LINK	1	<=11600			0.04	0.088
007	66706-65340	NUT TOP LINK	1	>=11601			0.05	0.11
008	99261-22210	JOINT TOP LINK RH	1	<=11600			0.7	1.54
008	66706-65360	JOINT TOP LINK RH	1	>=11601			0	0
009	99261-22220	JOINT TOP LINK LH	1	<=11600			0.7	1.54
009	66706-65350	JOINT TOP LINK LH	1	>=11601			0	0
010	34150-37640	PIN SET	7				0.06	0.132
011	96316-05560	PIN	2	<=14701			0	0
011	31150-71360	PIN	2	>=10001			0.166	0.3652
012	96316-05510	LINK LOWER	2	<=11600			5.34	11.748
012	66706-65212	LINK LOWER	2	>=11601			0	0
013	66706-65250	NUT	1	>=11601			0	0
014	66706-65260	SPRING	1	>=11601			0.041	0.0902
015	05511-50325	PIN SPLIT	5	<=11600			0.002	0.0044
015	05511-50425	PIN SPLIT	3	>=11601			0.003	0.0066
016	04013-50120	WASHER PLAIN	5				0	0
016	04013-50120	WASHER PLAIN	3				0	0
017	96316-05140	ROD LIFT RH	1	<=11600			0.324	0.7128
017	66706-65232	ROD LIFT RH	1	>=11601			0.315	0.693
018	05112-51255	PIN JOINT	2	<=11600			0.052	0.1144
018	66706-65280	PIN JOINT	2	>=11601			0.082	0.1804
019	02174-50120	NUT	2	>=11601			0.01	0.022
020	04512-50120	WASHER SPRING	2	>=11601			0	0
021	96316-06130	ROD LIFT LOWER	1	<=11600			0.704	1.5488
021	66706-65240	ROD LIFT LOWER	1	>=11601			0.5	1.1
022	05122-51240	PIN JOINT	2				0.039	0.0858

silverthorn.co.uk

↔ Interchangeable; ≠ not interchangeable; ← new for old; → old for new

REF.No	Part No.	Description	Q'ty	S.No.	I/C	REMARKS	Weight (kgf)	Weight (lb)
023	05112-51235	PIN JOINT	2	<=11600			0.034	0.0748
024	96316-06140	ROD LIFT LH	1	<=11600			1	2.2
024	66706-65272	ROD LIFT LH	1	>=11601			0.9	1.98
025	96316-05540	BRACKET	2	<=11600		EXCEPT CANADA	0.162	0.3564
025	66706-65290	BRACKET	2	>=11601		EXCEPT CANADA	0.34	0.748
025	96316-05540	BRACKET	2	<=11600		CANADA	0.162	0.3564
025	66706-65290	BRACKET	2	>=11601		CANADA	0.34	0.748
025	66204-65290	BRACKET	2			CANADA	0	0
026	31150-71860	JOINT CHAIN	4	<=11600			0.064	0.1408
026	66706-65370	JOINT CHAIN	4	>=11601			0.07	0.154
027	96316-05570	PIN	4	<=11600			0.012	0.0264
027	66706-65380	PIN	4	>=11601			0.021	0.0462
028	05511-50318	PIN SPLIT	4				0.001	0.0022
029	96316-05230	TURN BACKLE BOLT RH	2	<=11600			0.12	0.264
029	66706-65310	TURN BACKLE BOLT RH	2	>=11601			0.153	0.3366
030	96316-05240	TURN BACKLE BOLT LH	2	<=11600			0.115	0.253
030	66706-65320	TURN BACKLE BOLT LH	2	>=11601			0.153	0.3366
031	02112-50120	NUT	2				0.007	0.0154
032	96316-05580	TURN BACKLE	2				0.14	0.308
033	96316-05220	NUT	1	<=11600			0.03	0.066
034	66704-65110	PIN LOWER LINK	1				0	0
034	66704-86110	PIN LOWER LINK	1				1.19	2.618
035	66704-65120	BOLT SET	1			EXCEPT CANADA	0.023	0.0506
035	66704-65120	BOLT SET	1			CANADA	0.023	0.0506
035	66204-65120	BOLT SET	1			CANADA	0.055	0.121
036	02118-50100	NUT	1			EXCEPT CANADA	0.005	0.011
036	02118-50100	NUT	1			CANADA	0.005	0.011
036	02174-50140	NUT	1			CANADA	0.014	0.0308
037	96316-06302	ASSY HITCH	1			REF.No.038 TO 042 EXCEPT CANADA	3.8	8.36
037	96316-06302	ASSY HITCH	1			REF.No.038 TO 042 CANADA	3.8	8.36
037	66204-65500	ASSY HITCH	1			REF.No.038 TO 042 CANADA	0	0
038	96316-06312	HITCH	1			EXCEPT CANADA	3.76	8.272
038	96316-06312	HITCH	1			CANADA	3.76	8.272
038	66204-65600	HITCH	1			CANADA	0	0
039	96316-06320	PIN HITCH	1			EXCEPT CANADA	0.46	1.012
039	96316-06320	PIN HITCH	1				0.46	1.012
039	66204-65610	PIN HITCH	1			CANADA	0	0
040	31150-29730	PIN SNAP	1				0.044	0.0968
041	01150-51235	BOLT	3				0	0
042	04512-50120	WASHER SPRING	3				0	0
043	66616-34550	CHAIN	1				0.66	1.452
044	96316-05130	SUPPORT LIFT ROD	2	<=11600			0.24	0.528
045	66592-34410	PIN SNAP	2	<=11600			0.01	0.022
045	66713-34340	PIN SNAP	2	>=11601			0.013	0.0286
046	96316-05150	HANDEL	1	<=11600			0.256	0.5632
047	05411-00628	PIN SPRING	1	<=11600			0.004	0.0088
048	05411-00422	PIN SPRING	2				0.001	0.0022
049	66204-65350	SPACER	2			CANADA	0.12	0.264

silverhorn.co.uk

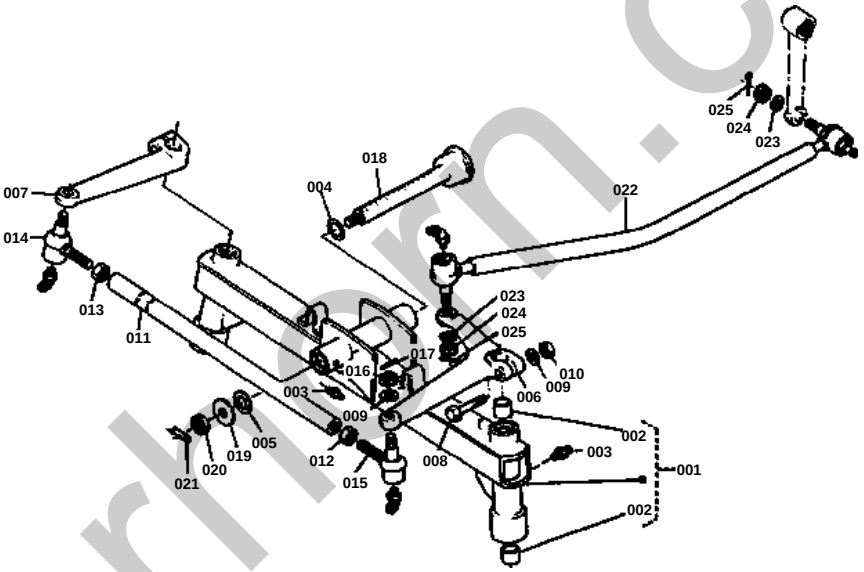

silverhorn.co.uk

↔ Interchangeable; ≠ not interchangeable; ← new for old; → old for new

REF.No	Part No.	Description	Q'ty	S.No.	I/C	REMARKS	Weight (kgf)	Weight (lb)
001	66721-56114	AXLE FRONT	1			REF.No.002	8.5	18.7
002	66581-56130	BUSH	4				0.019	0.0418
003	06613-10675	NIPPLE GREASE	3				0.003	0.0066
004	04811-00200	O RING	1				0.001	0.0022
005	09230-20264	SEAL OIL	1				0.002	0.0044
006	66721-56510	ARM KNUCKLE 1	1				1.05	2.31
007	66721-56520	ARM KNUCKLE 2	1				0.71	1.562
008	01173-51055	BOLT	2				0.036	0.0792
009	04512-50100	WASHER SPRING	4				0	0
010	02118-50100	NUT	2				0.005	0.011
011	66721-56530	ROD TIE	1				0.56	1.232
012	66591-56880	NUT	1				0.01	0.022
013	02172-50120	NUT	1				0.01	0.022
014	66711-56540	ASSY END ROD 2	1				0.13	0.286
015	66711-56550	ASSY END ROD 3	1				0.18	0.396
016	66591-56780	NUT SLOTTED	2				0.01	0.022
017	05511-52520	PIN SPLIT	2				0.001	0.0022
018	66605-57150	PIN CENTER	1				0.56	1.232
019	04011-50180	WASHER PLAIN	1				0.012	0.0264
020	02372-50180	NUT SLOTTED	1				0.019	0.0418
021	66611-57150	PIN SET	1				0.02	0.044
022	66711-57100	ASSY LINK DRAG	1				2	4.4
023	04512-50100	WASHER SPRING	2				0	0
024	66591-56780	NUT SLOTTED	2				0.01	0.022
025	05511-52528	PIN SPLIT	2				0.001	0.0022

silverhorn.co.uk

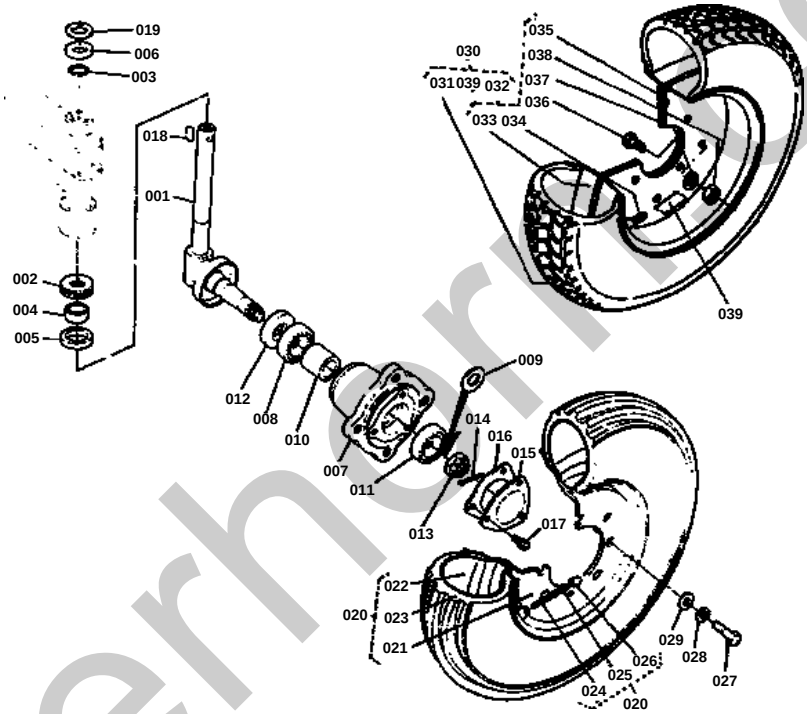

silverhernbo.uk

↔ Interchangeable; ≠ not interchangeable; ← new for old; → old for new

REF.No	Part No.	Description	Q'ty	S.No.	I/C	REMARKS	Weight (kgf)	Weight (lb)
001	66681-56210	KING PIN	2				1.32	2.904
002	08400-00010	BEARING THRUST BALL	2				0.046	0.1012
003	04811-00200	O RING	2				0.001	0.0022
004	66581-56180	COLLAR	2				0.021	0.0462
005	09160-28408	SEAL OIL	2				0.01	0.022
006	66681-56220	COLLAR	2				0.026	0.0572
007	66681-56310	HUB FRONT WHEEL	2				1.5	3.3
008	08101-06205	BEARING BALL	2				0.14	0.308
009	34150-11440	WASHER	2				0.004	0.0088
010	34150-11420	COLLAR	2				0.125	0.275
011	08101-06204	BEARING BALL	2				0.102	0.2244
012	34150-11150	SEAL OIL	2				0.05	0.11
013	02372-50200	NUT SLOTTED	2				0.024	0.0528
014	05511-50435	PIN SPLIT	2				0.004	0.0088
015	32130-11350	CAP FRONT WHEEL	2				0.22	0.484
016	32130-11360	GASKET	2				0	0
017	01120-50814	BOLT	6				0	0
018	05712-00730	KEY FEATHER	2				0.011	0.0242
019	63633-11860	SHIM A	2				0.003	0.0066
019	63633-11870	SHIM B	2				0.001	0.0022
020	99999-99999	BLANK	0			ASSY F/WHEEL 400-9	0	0
021	99999-99999	BLANK	0			REF.No.021 TO 026 AME WHEEL B6100E AMERICA OBTAINED LOCALLY	0	0
022	99999-99999	BLANK	0			TUBE B6100E AMERICA OBTAINED LOCALLY	0	0
023	99999-99999	BLANK	0			TIRE B6100E AMERICA OBTAINED LOCALLY	0	0
024	99999-99999	BLANK	0			ASSY VALVE B6100E AMERICA OBTAINED LOCAL	0	0
025	99999-99999	BLANK	0			CORD VALVE B6100E AMERICA OBTAINED LOCAL	0	0
026	99999-99999	BLANK	0			CAP B6100E AMERICA OBTAINED LOCALLY	0	0
027	01153-51225	BOLT	8				0.032	0.0704
027	01123-51225	BOLT	8	>=10001			0.04	0.088
028	04512-50120	WASHER SPRING	8				0	0
029	04013-50120	WASHER PLAIN	8				0	0
030	34159-11800	ASSY FRONT WHEEL	2			REF.No.031 032 AND 039 B6100E CANADA	10.6	23.32
031	34159-11810	TIRE	2			B6100E CANADA	5.6	12.32
032	34159-11890	WHEEL	2			REF.No.033 TO 038 B6100E CANADA	5.06	11.132
033	34159-11840	RIM	2			B6100E CANADA	5.2	11.44
034	34159-11850	VALVE TIRE	2			B6100E CANADA	0.013	0.0286
035	34159-11860	GASKET	2			B6100E CANADA	0.05	0.11
036	01170-51022	BOLT	12			B6100E CANADA	0	0
037	04512-50100	WASHER SPRING	12			B6100E CANADA	0	0
038	02118-50100	NUT	12			B6100E CANADA	0.005	0.011
039	34159-11910	LABEL AIR PRESSURE	2			B6100E CANADA	0.001	0.0022

silverhorn.co.uk

IMAGE NOT AVAILABLE

silverhorn.co.uk

↔ Interchangeable; ≠ not interchangeable; ← new for old; → old for new

REF.No	Part No.	Description	Q'ty	S.No.	I/C	REMARKS	Weight (kgf)	Weight (lb)
001	66704-61200	ASSY TOOLS	1				1.8	3.96
002	15241-86610	WRENCH FILTER	1				0.133	0.2926
003	66701-62915	INSTRUCTION MANUAL	1	<=17644		AMERICA CANADA	0	0
003	66701-62917	INSTRUCTION MANUAL	1	>=10001		AMERICA CANADA	0	0
004	66804-62924	PARTS LIST	1			AMERICA CANADA	0.236	0.5192

silverhorn.co.uk