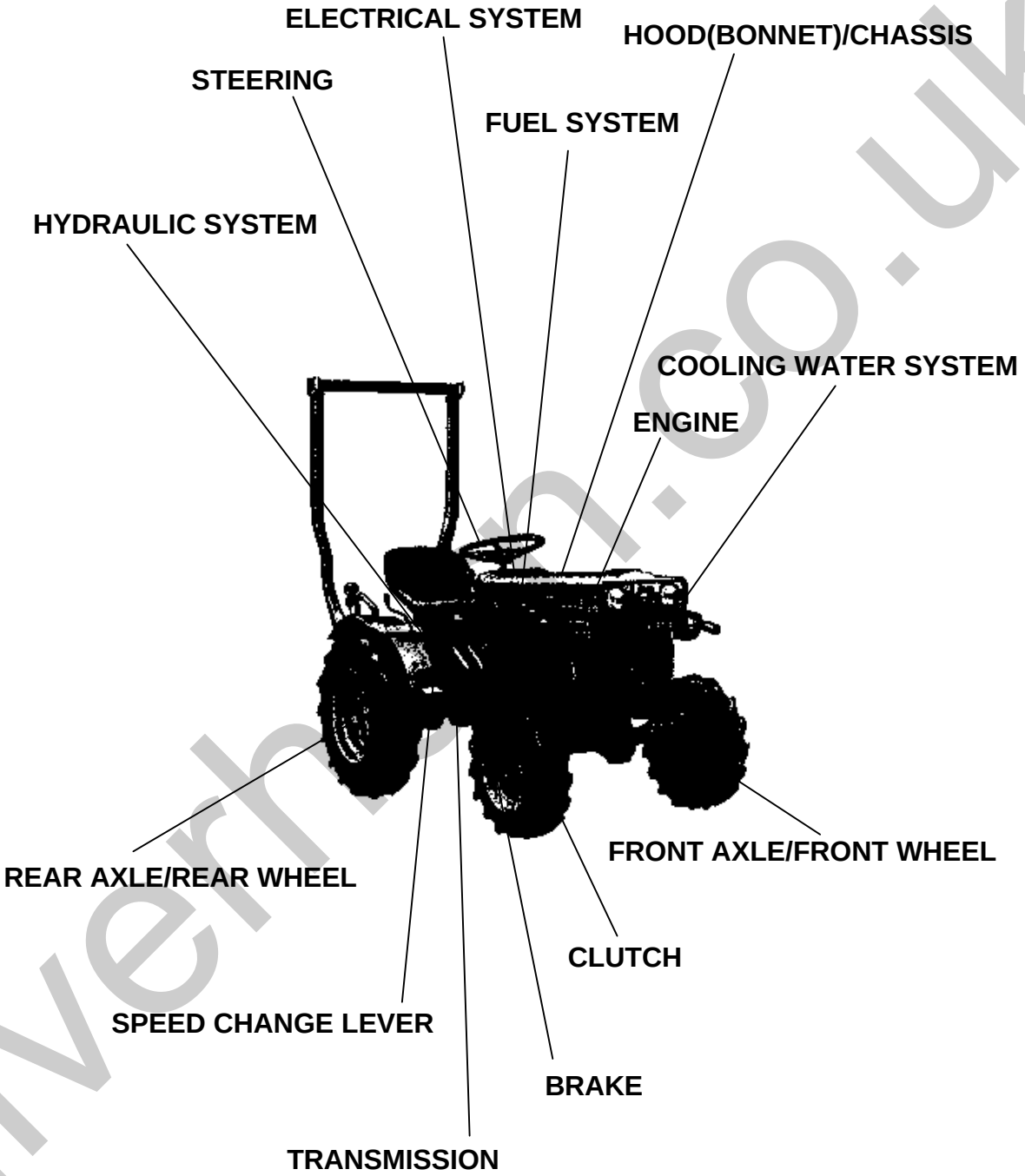

LABELS

ACCESSORIES

silverhorn.co.uk

Item	Part No.	Description	Book
ENGINE	01T001	CRANKCASE	100K0032
	01T002	CYLINDER HEAD	100K0032
	01T003	GEAR CASE	100K0032
	01T004	BEARING CASE	100K0032
	01T005	BREATHER	100K0032
	01T006	INLET MANIFOLD	100K0032
	01T007	VALVE ROCKER ARM	100K0032
	01T008	HEAD COVER	100K0032
	01T009	CAMSHAFT	100K0032
	01T010	PISTON CRANKSHAFT	100K0032
	01T011	FLYWHEEL	100K0032
	01T012	NOZZLE HOLDER	100K0032
	01T013	INJECTION PUMP	100K0032
	01T014	SPEED CONTROL PLATE	100K0032
	01T015	GOVERNOR	100K0032
	01T016	DYNAMO	100K0032
	01T017	CLUTCH	100K0032
	01T018	NAME PLATE	100K0032
	01T019	NOZZLE HOLDER	100K0032
	01T020	INJECTION PUMP	100K0032
	01T021	DYNAMO	100K0032
	01T022	STARTER	100K0032
	01T023	OIL PRESSURE PUMP	100K0032
TRANSMISSION	01T024	TRANSMISSION CASE	100K0032
	01T025	CASE COVER	100K0032
	01T026	AXLE CASE	100K0032
FRONT AXLE/FRONT WHEEL	01T027	WHEEL HUB [AMERICA]	100K0032
CLUTCH	01T028	CLUTCH ROD	100K0032
TRANSMISSION	01T029	1st SHAFT 4th SHAFT	100K0032
	01T030	2nd SHAFT FRONT WHEEL SHAFT	100K0032
	01T031	3rd 5th PTO SHAFT	100K0032
REAR AXLE/REAR WHEEL	01T032	DIFFERENTIAL	100K0032
SPEED CHANGE LEVER	01T033	AUX. SPEED CHANGE	100K0032
	01T034	ROTARY SPEED CHANGE	100K0032
BRAKE	01T035	BRAKE	100K0032
HYDRAULIC SYSTEM	01T036	HYDRAULIC PIPE	100K0032
TRANSMISSION	01T037	HYDROSTATIC TRANSMISSION	100K0032
HYDRAULIC SYSTEM	01T038	CONTROL VALVE	100K0032
	01T039	HYDRAULICS 1	100K0032
	01T040	HYDRAULICS 2	100K0032
STEERING	01T041	STEERING	100K0032
BRAKE	01T042	BRAKE ROD	100K0032
	01T043	RELEASE ROD	100K0032
SPEED CHANGE LEVER	01T044	SPEED CHANGE 1	100K0032
	01T045	SPEED CHANGE 2	100K0032
HOOD(BONNET)/CHASSIS	01T046	SEAT	100K0032
LABELS	01T047	NAME PLATE	100K0032
CLUTCH	01T048	CLUTCH HOUSING	100K0032
FRONT AXLE/FRONT WHEEL	01T049	FRONT WHEEL SUPPORT	100K0032
COOLING WATER SYSTEM	01T050	RADIATOR	100K0032
HOOD(BONNET)/CHASSIS	01T051	FENDER	100K0032
	01T052	BONNET	100K0032
ENGINE	01T053	MUFFLER	100K0032
FUEL SYSTEM	01T054	FUEL TANK	100K0032
ELECTRICAL SYSTEM	01T055	BATTERY	100K0032
	01T056	PANEL	100K0032

silverkorn.co.uk

Item	Part No.	Description	Book
ENGINE	01T057	AIR CLEANER	100K0032
FUEL SYSTEM	01T058	FUEL FILTER	100K0032
FRONT AXLE/FRONT WHEEL	01T061	FRONT AXLE CASE [DP]	100K0032
	01T062	FRONT WHEEL GEAR CASE [DP]	100K0032
	01T063	KNUCKLE ARM [DP]	100K0032
	01T064	FRONT DIFFERENTIAL [DP]	100K0032
	01T065	FRONT AXLE JOINT [DP]	100K0032
	01T066	DRIVE SHAFT [DP]	100K0032
HYDRAULIC SYSTEM	01T067	3-POINT LINKAGE [EP DP]	100K0032
SPEED CHANGE LEVER	01T070	SPEED CHANGE 2 [OPTION]	100K0032
ACCESSORIES	01T071	ACCESSORY AND SERVICE PARTS	100K0032

silverhorn.co.uk

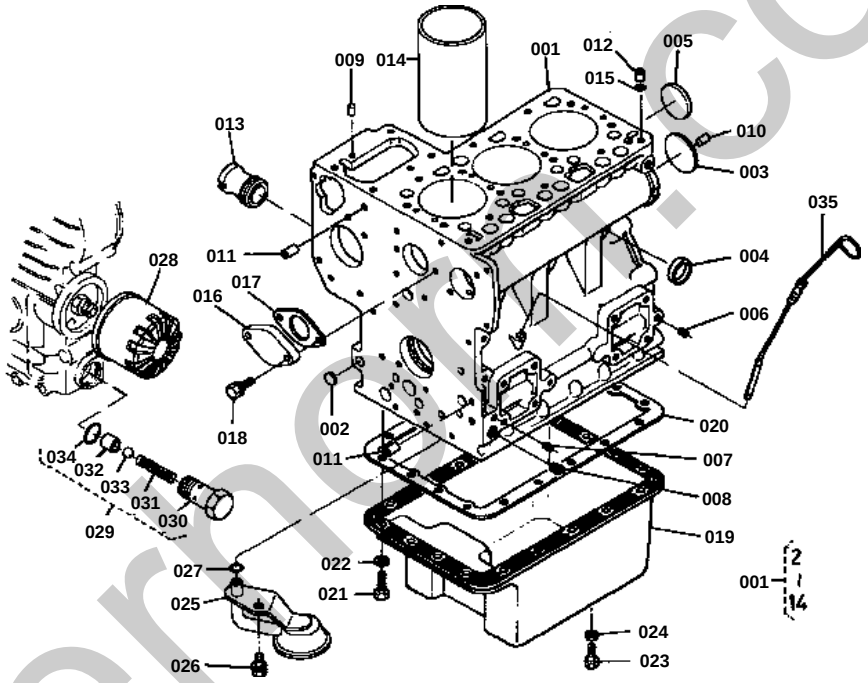

silvermoll.co.uk

CRANKCASE

↔ Interchangeable; ≠ not interchangeable; ← new for old; → old for new

REF.No	Part No.	Description	Q'ty	S.No.	I/C	REMARKS	Weight (kgf)	Weight (lb)
001	15361-01010	ASSY CRANKCASE	1			REF.NO.002 TO 014	27	59.4
002	06311-75015	PLUG EXPANSION	3				0.002	0.0044
003	06311-75040	PLUG EXPANSION	1				0.02	0.044
004	15321-96260	CAP SEALING	5				0.014	0.0308
005	15221-03490	CAP SEALING	1				0.02	0.044
006	15261-96010	PLUG	6				0.002	0.0044
007	15521-96020	PLUG	3				0.003	0.0066
008	15521-96030	PLUG	1				0.007	0.0154
009	05012-00609	PIN STRAIGHT	2				0.003	0.0066
010	05012-00814	PIN STRAIGHT	2				0.006	0.0132
011	15231-33960	PIN PIPE	2				0.001	0.0022
012	15221-33650	PIN PIPE	1				0.004	0.0088
013	15221-72880	PIPE WATER 2	1				0.115	0.253
014	15281-02310	LINER CYLINDER	3				0.363	0.7986
015	15221-33700	O RING	1				0.001	0.0022
016	15261-73910	COVER WATER	1				0.13	0.286
017	15261-73920	GASKET WATER COVER	1				0	0
018	01023-50618	BOLT	2				0.006	0.0132
019	15371-01614	OIL PAN	1				1.1	2.42
020	15381-01620	GASKET OIL PAN	1				0	0
021	15381-91090	BOLT	18				0	0
022	04512-50060	WASHER SPRING	18				0	0
023	15221-33750	PLUG	1				0.032	0.0704
024	15109-33660	GASKET	1				0.001	0.0022
025	15371-32110	FILTER OIL 1	1				0.4	0.88
026	01123-50816	BOLT	1				0.011	0.0242
027	04810-00140	O RING	1				0.001	0.0022
028	15241-32090	CARTRIDGE OIL FILTER	1				0.35	0.77
029	15261-36070	ASSY VALVE RELIEF	1			REF.NO.030 TO 034	0.078	0.1716
030	99999-99999	BLANK	0			ORDER BY REF.NO.029	0	0
031	99999-99999	BLANK	0			ORDER BY REF.NO.029	0	0
032	99999-99999	BLANK	0			ORDER BY REF.NO.029	0	0
033	07715-03213	BALL	1				0.004	0.0088
034	04810-00150	O RING	1				0.001	0.0022
035	15371-36410	GAUGE OIL	1				0.021	0.0462

silverhorn.co.uk

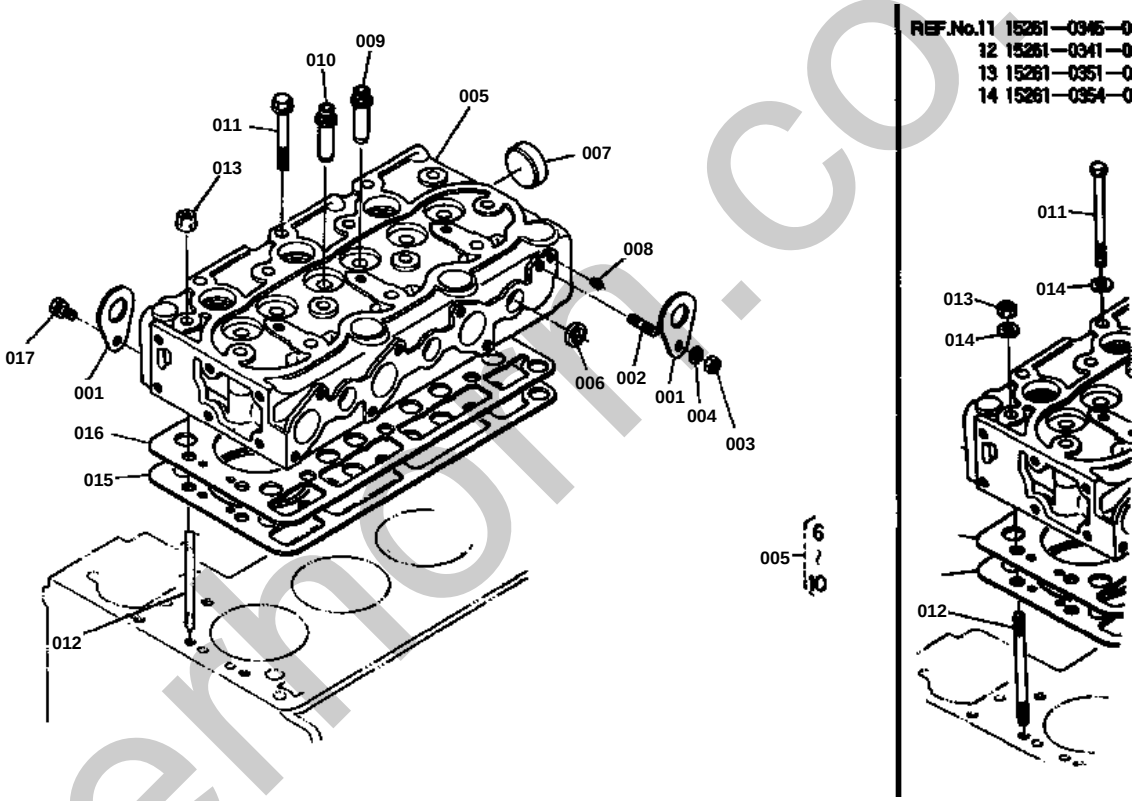

silvermoll.co.uk

CYLINDER HEAD

↔ Interchangeable; ≠ not interchangeable; ← new for old; → old for new

REF.No	Part No.	Description	Q'ty	S.No.	I/C	REMARKS	Weight (kgf)	Weight (lb)
001	15221-01750	HOOK ENGINE	2				0.04	0.088
002	01513-50816	STUD	1				0.009	0.0198
003	02156-50080	NUT	1				0.004	0.0088
004	04512-50080	WASHER SPRING	1				0	0
005	15361-03040	ASSY CYLINDER HEAD	1			REF.NO.006 TO 010	9.5	20.9
006	15261-03370	CAP SEALING	5				0.005	0.011
007	15321-96260	CAP SEALING	1				0.014	0.0308
008	15261-96010	PLUG	2				0.002	0.0044
009	15261-13540	GUIDE INLET VALVE	3				0.02	0.044
010	15261-13560	GUIDE EXHAUST VALVE	3				0.02	0.044
011	15261-03450	BOLT CYLINDER HEAD	12	<=198785			0	0
011	19231-03450	BOLT CYLINDER HEAD	12	>=198786			0	0
011	19231-03452	BOLT CYLINDER HEAD	12	>=1001			0.035	0.077
012	15261-03410	STUD CYLINDER HEAD	2	<=198785			0	0
012	19231-03410	STUD CYLINDER HEAD	2	>=198786			0	0
012	19231-03412	STUD CYLINDER HEAD	2	>=1001			0.035	0.077
013	15261-03510	NUT CYLINDER HEAD	2	<=198785			0.006	0.0132
013	19231-03510	NUT CYLINDER HEAD	2	>=198786			0	0
013	19231-03512	NUT CYLINDER HEAD	2	>=1001			0.01	0.022
014	15261-03540	WASHER PLAIN	14	<=198785			0.002	0.0044
015	15361-03310	GASKET CYLINDER HEAD	1				0.064	0.1408
016	15361-03320	SHIM CYL.HEAD GASKET	1				0.031	0.0682
017	01123-50816	BOLT	1				0.011	0.0242

silverhorn.co.uk

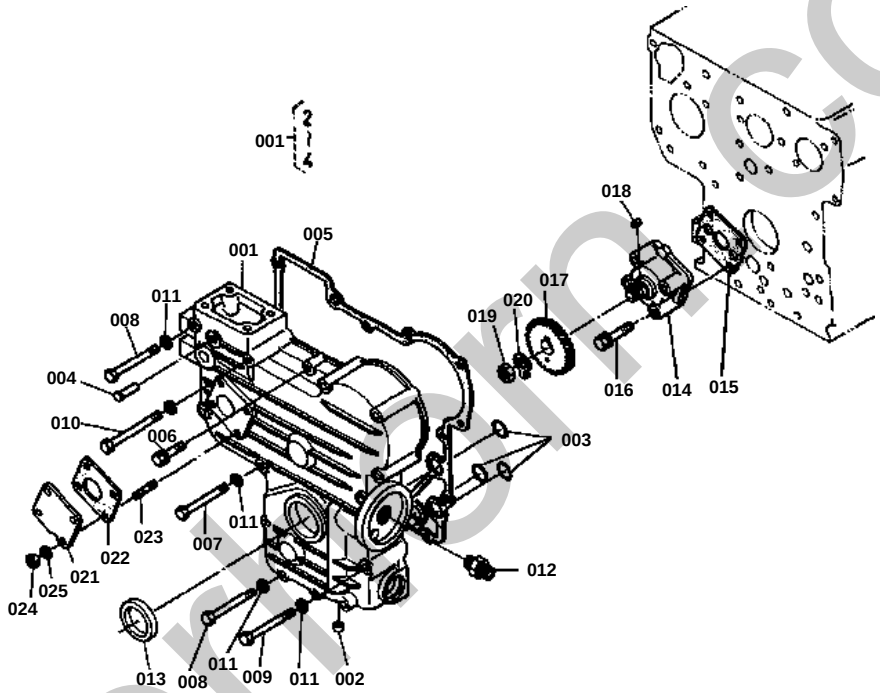

silverthorn.co.uk

GEAR CASE

↔ Interchangeable; ≠ not interchangeable; ← new for old; → old for new

REF.No	Part No.	Description	Q'ty	S.No.	I/C	REMARKS	Weight (kgf)	Weight (lb)
001	15381-04020	ASSY CASE GEAR	1			REF.NO.002 TO 004	0	0
002	15221-33640	PLUG PIN	2				0.003	0.0066
003	04810-06130	O RING	3				0	0
003	04811-06130	O RING	3	>=1001			0.001	0.0022
004	15221-56280	PIN START SPRING	1				0.006	0.0132
005	15261-04130	GASKET GEAR CASE	1				0	0
006	01023-50630	BOLT	1				0.008	0.0176
007	01053-50660	BOLT	3				0.014	0.0308
008	01053-50665	BOLT	8				0.015	0.033
009	01053-50670	BOLT	1				0.014	0.0308
010	14611-91060	BOLT	1				0.015	0.033
011	04512-50060	WASHER SPRING	13				0	0
012	15241-32290	PIPE JOINT	1				0.053	0.1166
013	09550-00008	SEAL OIL	1				0.01	0.022
014	15261-35010	ASSY PUMP OIL	1				0.32	0.704
015	15261-35150	GASKET OIL PUMP	1				0	0
016	15261-91022	BOLT	4				0.012	0.0264
017	15261-35660	GEAR OIL PUMP DRIVE	1				0	0
017	15954-35660	GEAR OIL PUMP DRIVE	1	>=1001			0.14	0.308
018	05712-00410	KEY FEATHER	1				0.001	0.0022
019	02016-50100	NUT	1				0.009	0.0198
020	04211-50100	WASHER CLAW	1				0.002	0.0044
021	15223-83340	COVER	1				0.152	0.3344
022	15221-88130	GASKET	1				0	0
023	15221-88210	STUD	4				0.005	0.011
024	02056-50060	NUT	4				0.002	0.0044
025	04512-50060	WASHER SPRING	4				0	0

silverhorn.co.uk

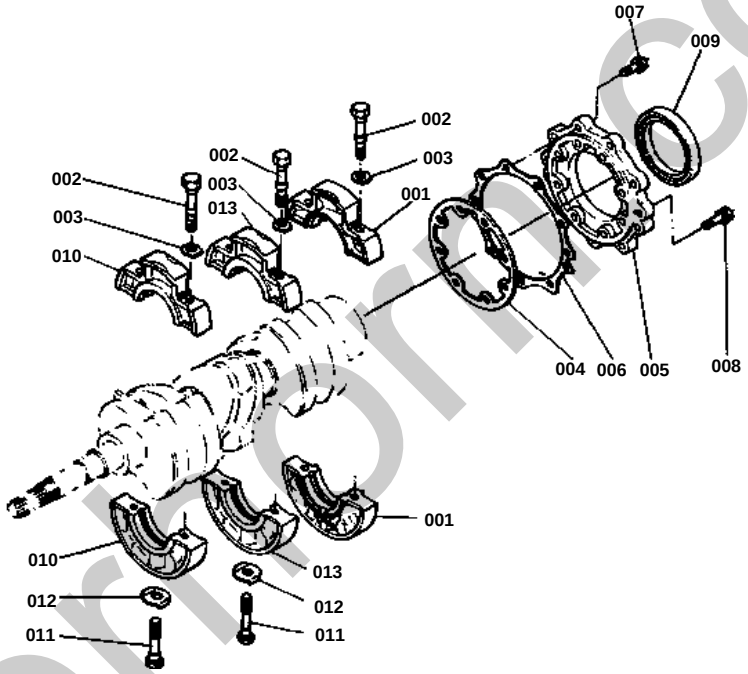

silvermonco.uk

BEARING CASE

↔ Interchangeable; ≠ not interchangeable; ← new for old; → old for new

REF.No	Part No.	Description	Q'ty	S.No.	I/C	REMARKS	Weight (kgf)	Weight (lb)
001	15261-04090	CASE MAIN BEARING 1	1				0.8	1.76
002	15261-04540	BOLT BEARING CASE	6				0.02	0.044
003	15261-04570	WASHER BEARING CASE	6				0.001	0.0022
004	15261-04360	GASKET BEARING CASE	1				0	0
005	15261-04810	COVER BEARING CASE	1	<=188651			0.204	0.4488
005	15549-04810	COVER BEARING CASE	1	>=188652			0.2	0.44
006	15261-04820	GASKET BRG.CASE COV.	1				0	0
007	01023-50620	BOLT	9				0.006	0.0132
008	01023-50625	BOLT	8				0.007	0.0154
009	09560-00007	SEAL OIL	1	<=188651			0.029	0.0638
009	19215-04460	SEAL OIL	1	>=188652			0.03	0.066
010	15261-04040	CASE MAIN BEARING 2	1				0.687	1.5114
011	15261-04560	BOLT BEARING CASE	2				0.02	0.044
012	15261-04590	WASHER BEARING CASE	2				0.004	0.0088
013	15381-04050	CASE MAIN BEARING 3	1				0.688	1.5136

silverhorn.co.uk

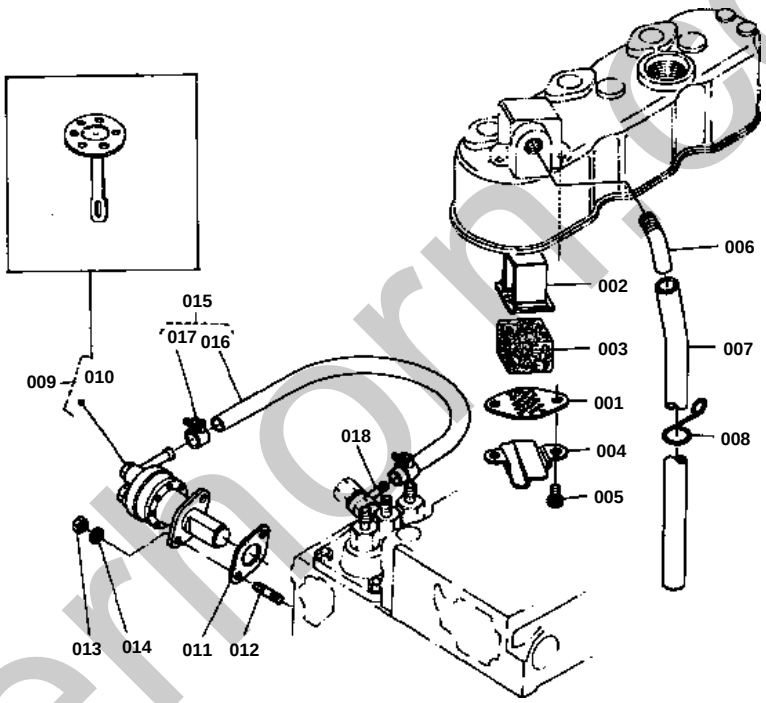

silvermorrco.uk

BREATHER

↔ Interchangeable; ≠ not interchangeable; ← new for old; → old for new

REF.No	Part No.	Description	Q'ty	S.No.	I/C	REMARKS	Weight (kgf)	Weight (lb)
001	15951-05140	PLATE ELEMENT 1	1				0.005	0.011
002	15521-05150	PLATE ELEMENT 2	1				0.01	0.022
003	15521-05670	ELEMENT BREATHER	1				0.01	0.022
004	15951-05370	OIL SHIELD BREATHER	1				0.005	0.011
005	03024-50510	SCREW	2				0.002	0.0044
006	15521-05550	JOINT BREATHER PIPE	1				0.04	0.088
007	15261-05510	PIPE BREATHER	1				0.069	0.1518
008	15951-05590	CLAMP PIPE	1				0.003	0.0066
009	15381-52030	ASSY PUMP FUEL	1			REF.NO.010	0	0
010	15381-52040	COMP DIAPHRAGM	1				0	0
011	15241-52140	GASKET FUEL PUMP	1				0	0
012	01513-50616	STUD	2				0.004	0.0088
013	02056-50060	NUT	2				0.002	0.0044
014	04512-50060	WASHER SPRING	2				0	0
015	15261-42010	ASSY PIPE FUEL	1			REF.NO.016 017	0.032	0.0704
016	99999-99999	BLANK	0			ORDER BY REF.NO.015	0	0
017	14301-42750	CLIP PIPE	2				0.005	0.011
018	14111-42410	JOINT EYE	1				0.025	0.055

silverhorn.co.uk

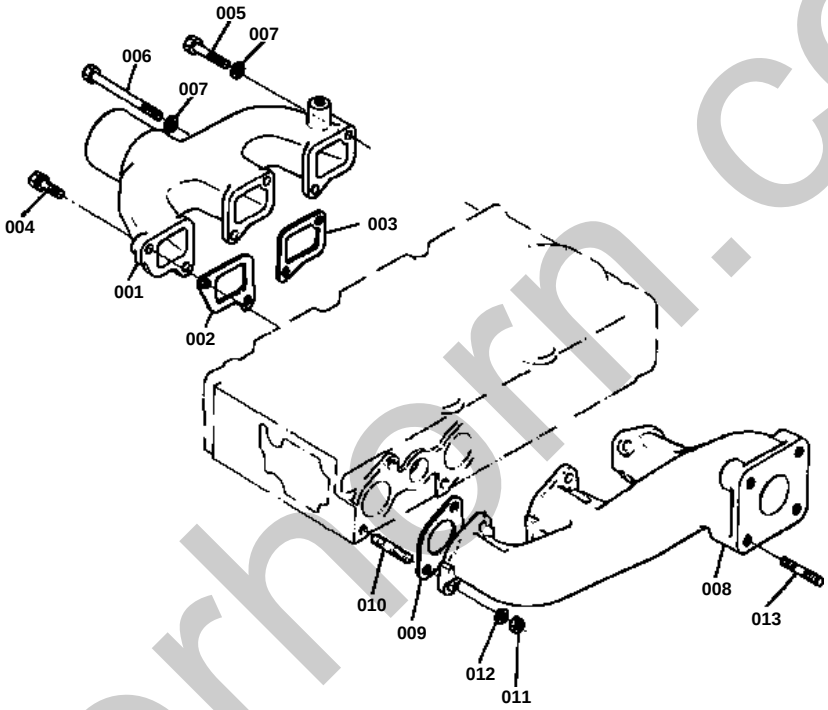

silverhorn.co.uk

INLET MANIFOLD

↔ Interchangeable; ≠ not interchangeable; ← new for old; → old for new

REF.No	Part No.	Description	Q'ty	S.No.	I/C	REMARKS	Weight (kgf)	Weight (lb)
001	15371-11760	MANIFOLD INLET	1				0.45	0.99
002	15261-11820	GASKET IN-MANIFOLD 1	1				0	0
003	15261-11830	GASKET IN-MANIFOLD 2	2				0	0
004	01023-50620	BOLT	4				0.006	0.0132
005	01053-50660	BOLT	1				0.014	0.0308
006	15381-91070	BOLT	1				0.016	0.0352
007	04512-50060	WASHER SPRING	2				0	0
008	15371-12310	MANIFOLD EXHAUST	1				1.77	3.894
009	15261-12360	GASKET EX-MANIFOLD	3				0	0
010	15381-91532	STUD	6				0.005	0.011
011	02056-50060	NUT	6				0.002	0.0044
012	04512-50060	WASHER SPRING	6				0	0
013	01513-50822	STUD	4				0.01	0.022

silverhorn.co.uk

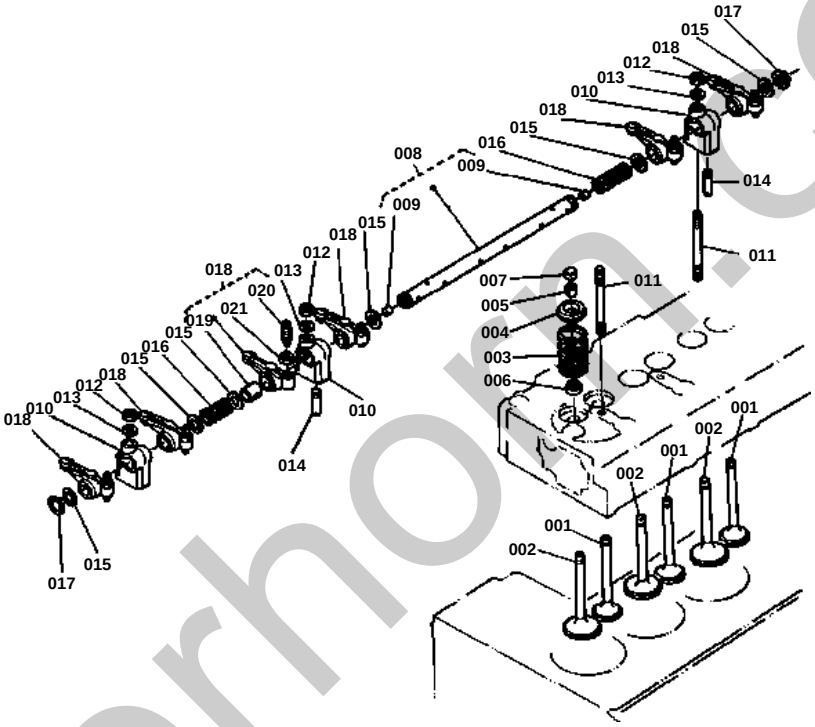

silverhorn.co.uk

VALVE ROCKER ARM

↔ Interchangeable; ≠ not interchangeable; ← new for old; → old for new

REF.No	Part No.	Description	Q'ty	S.No.	I/C	REMARKS	Weight (kgf)	Weight (lb)
001	15261-13110	VALVE INLET	3				0.043	0.0946
002	15261-13120	VALVE EXHAUST	3				0.038	0.0836
003	15261-13240	SPRING VALVE	6				0.02	0.044
004	15261-13330	RETAINER VALVE SP.	6				0	0
005	15261-13360	COLLET VALVE SPRING	12				0.004	0.0088
006	15261-13150	SEAL VALVE STEM	6				0.001	0.0022
007	15261-13280	CAP VALVE	6				0	0
008	15371-14050	ASSY SHAFT R-ARM	1			REF.NO.009	0.133	0.2926
009	03410-50606	SCREW SET	2				0.001	0.0022
010	15261-14350	BRACKET ROCKER ARM	3				0.032	0.0704
011	15951-14410	STUD	3				0	0
012	15261-92010	NUT	3				0.005	0.011
013	15261-94010	WASHER PLAIN	3				0.002	0.0044
014	15261-14420	SCREW SET	1				0.002	0.0044
015	15261-14430	WASHER ROCKER ARM	6				0.001	0.0022
016	15261-14310	SPRING ROCKER ARM	2				0.003	0.0066
017	04612-00110	CIR-CLIP EXTERNAL	2				0.001	0.0022
018	15261-14030	ASSY ROCKER ARM	6			REF.NO.019 TO 021	0	0
019	15261-14180	BUSH ROCKER ARM	6				0	0
020	15261-14232	SCREW ADJUSTING	6				0.006	0.0132
021	15261-14240	NUT	6				0.002	0.0044

silverhorn.co.uk

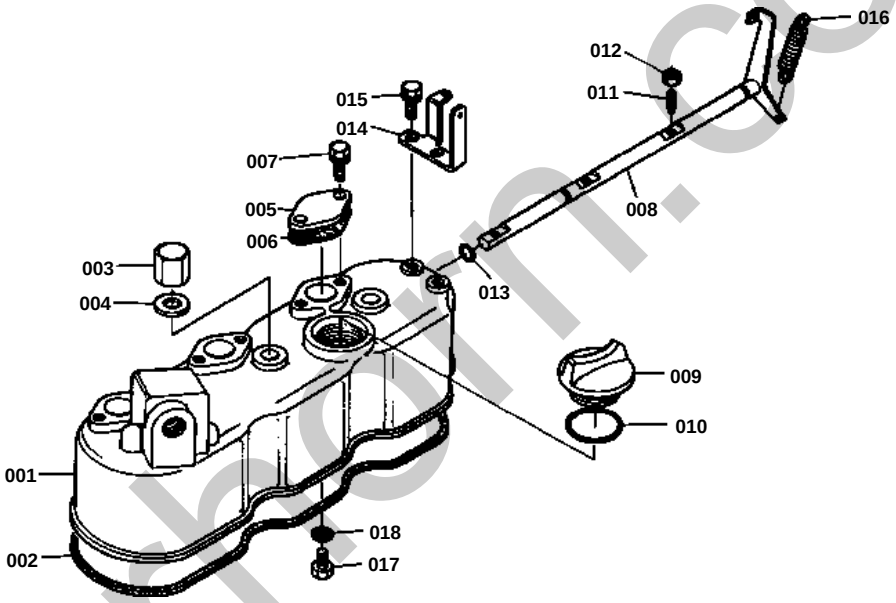

silverhorn.co.uk

HEAD COVER

↔ Interchangeable; ≠ not interchangeable; ← new for old; → old for new

REF.No	Part No.	Description	Q'ty	S.No.	I/C	REMARKS	Weight (kgf)	Weight (lb)
001	15531-14510	COVER CYLINDER HEAD	1				0.66	1.452
002	15381-14520	GASKET HEAD COVER	1				0.005	0.011
003	15951-92330	NUT CAP	3				0	0
004	15951-96660	GASKET	3				0.001	0.0022
005	15261-66630	COVER DECOMP HOLE	3				0.023	0.0506
006	15261-66640	GASKET HOLE COVER	3				0	0
007	01023-50614	BOLT	6				0.005	0.011
008	15531-66040	SHAFT DECOMPRESS	1				0.2	0.44
009	15221-33140	PLUG OIL FILLER	1				0.038	0.0836
010	04811-50300	O RING	1				0.001	0.0022
011	15261-66350	BOLT DECOMPRESS	3				0.002	0.0044
012	02056-50050	NUT	3				0.002	0.0044
013	04811-00080	O RING	1				0.001	0.0022
014	15261-66190	HOLDER DECOMP WIRE	1				0.03	0.066
015	01023-50614	BOLT	2				0.005	0.011
016	15221-66280	SPRING DECOMPRESS	1				0.008	0.0176
017	15221-66410	BOLT	1				0.005	0.011
018	04512-50060	WASHER SPRING	1				0	0

silverhorn.co.uk

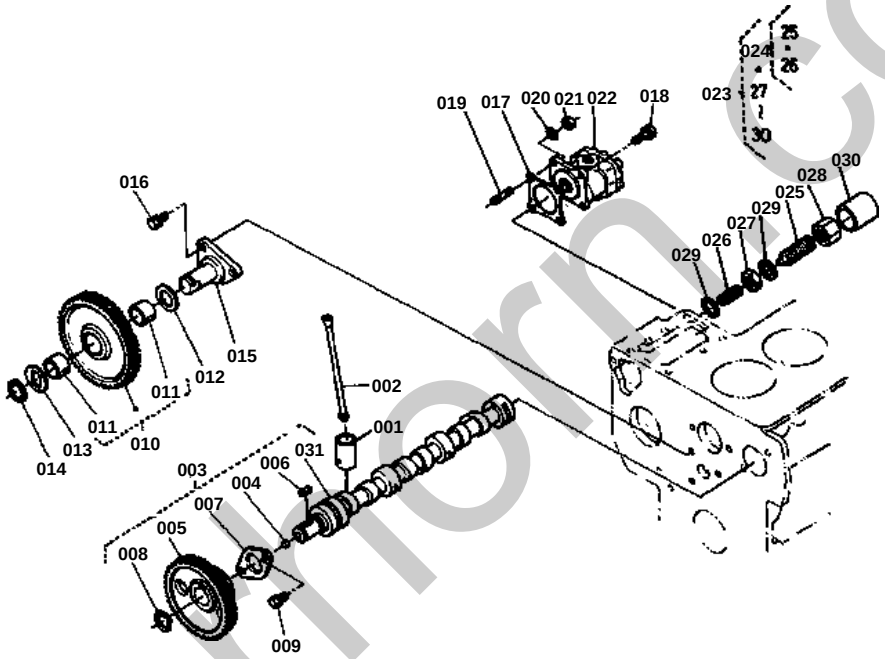

silverthorn.co.uk

CAMSHAFT

↔ Interchangeable; ≠ not interchangeable; ← new for old; → old for new

REF.No	Part No.	Description	Q'ty	S.No.	I/C	REMARKS	Weight (kgf)	Weight (lb)
001	15261-15550	TAPPET	6				0.03	0.066
002	15261-15110	ROD PUSH	6				0.022	0.0484
003	15381-16010	ASSY CAMSHAFT	1			REF.NO.004 TO 008 031	1.045	2.299
004	15261-96880	PLUG BLIND	2				0.002	0.0044
005	15261-16510	GEAR CAMSHAFT	1				0.354	0.7788
006	05712-00515	KEY FEATHER	1				0.003	0.0066
007	15261-16270	STOPPER CAMSHAFT	1				0.034	0.0748
008	04612-00180	CIR-CLIP EXTERNAL	1				0.001	0.0022
009	01023-50614	BOLT	2				0.005	0.011
010	15261-24010	ASSY GEAR IDLE	1			REF.NO.011	0.59	1.298
011	15261-24980	BUSH IDLE GEAR	2				0.006	0.0132
012	15261-24360	COLLAR IDLE GEAR 1	1				0.008	0.0176
013	15261-24370	COLLAR IDLE GEAR 2	1				0.008	0.0176
014	15261-24320	CIR-CLIP IDLE GEAR	1				0.004	0.0088
015	15261-24250	SHAFT IDLE GEAR	1				0.2	0.44
016	01023-50616	BOLT	3				0.005	0.011
017	15231-87130	GASKET O/P PUMP	1				0	0
018	01123-50822	BOLT	3				0.012	0.0264
019	01513-50822	STUD	1				0.01	0.022
020	04512-50080	WASHER SPRING	1				0	0
021	02156-50080	NUT	1				0.004	0.0088
022	67211-76100	ASSY GEAR PUMP	1				1.45	3.19
023	15261-54090	ASSY APPARATUS I/D	1			REF.NO.024 027 TO 030	0.027	0.0594
024	15261-54100	ASSY BOLT ADJUSTING	1			REF.NO.025 026	0.008	0.0176
025	99999-99999	BLANK	0			ORDER BY REF.NO.024	0	0
026	99999-99999	BLANK	0			0RDER BY REF.NO.024	0	0
027	15261-92020	NUT	1				0.004	0.0088
028	15261-92330	NUT CAP	1				0.01	0.022
029	15021-33660	GASKET	2				0.001	0.0022
030	15261-54270	CAP	1				0.002	0.0044
031	15381-16150	CAMSHAFT	1				0.95	2.09

silverhorn.co.uk

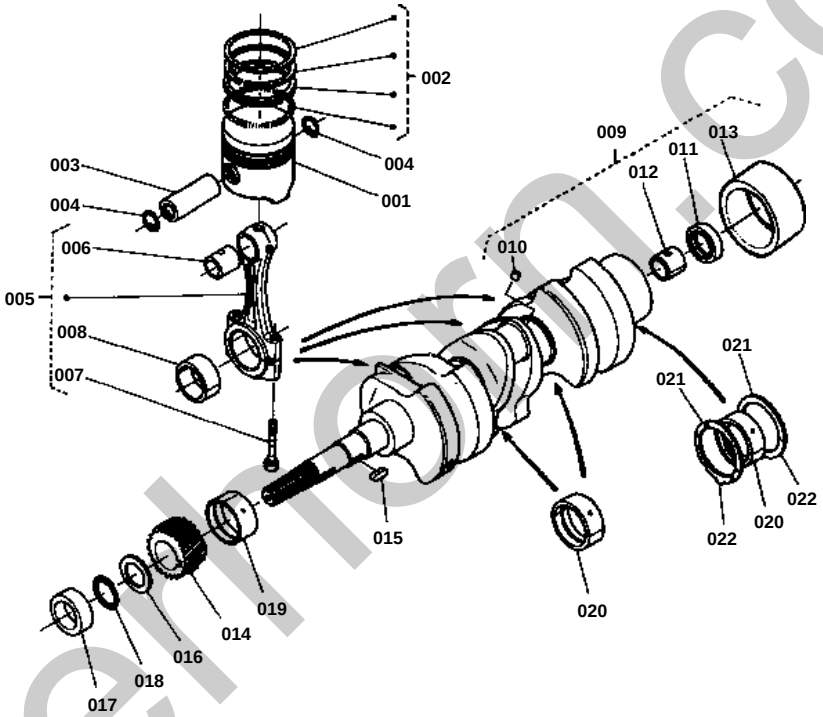

silverhorn.co.uk

PISTON CRANKSHAFT

↔ Interchangeable; ≠ not interchangeable; ← new for old; → old for new

REF.No	Part No.	Description	Q'ty	S.No.	I/C	REMARKS	Weight (kgf)	Weight (lb)
001	15281-21110	PISTON	3			STD	0.266	0.5852
001	15281-21910	PISTON	3			+0.5MM	0.26	0.572
002	15361-21050	ASSY RINGS PISTON	3			STD	0.022	0.0484
002	15361-21090	ASSY RINGS PISTON	3			+0.5MM	0.02	0.044
003	15261-21310	PISTON PIN	3				0.102	0.2244
004	15261-21330	CIR-CLIP PISTON PIN	6				0.001	0.0022
005	15261-22010	ASSY CONNECTING ROD	3			REF.NO.006 TO 008	0	0
005	15531-22010	ASSY CONNECTING ROD	3	>=1001		REF.NO.006 TO 008	0	0
006	15261-21980	BUSH PISTON PIN	3				0.012	0.0264
007	15261-22140	BOLT CONNECTING ROD	6				0	0
008	15261-22310	METAL CRANKPIN	3			STD SET	0	0
008	15531-22310	METAL CRANKPIN	3	>=1001		STD SET	0	0
008	15531-22970	METAL CRANKPIN	3			-0.2MM SET	0	0
008	15531-22980	METAL CRANKPIN	3			-0.4MM SET	0	0
009	15371-23010	ASSY CRANKSHAFT	1	<=188651		REF.NO.010 TO 012	0	0
009	15372-23010	ASSY CRANKSHAFT	1	>=188652		REF.NO.010 TO 013	8	17.6
010	15131-01380	PLUG PIN	3				0.001	0.0022
011	09400-14247	SEAL OIL	1				0.004	0.0088
012	66621-14120	BEARING DRY	1				0.006	0.0132
013	19215-23280	SLEEVE CRANKSHAFT	1	>=188652			0.05	0.11
014	15261-24110	GEAR CRANKSHAFT	1				0.164	0.3608
015	05712-00515	KEY FEATHER	1				0.003	0.0066
016	15261-23310	SLINGER OIL	1				0.008	0.0176
017	15261-23250	COLLAR CRANKSHAFT	1	<=188651			0	0
017	15956-23250	COLLAR CRANKSHAFT	1	>=188652			0	0
018	04811-10220	O RING	1				0.001	0.0022
019	15261-23470	METAL CRANKSHAFT	1			STD	0	0
019	15261-23910	METAL CRANKSHAFT	1			-0.2MM	0	0
019	15261-23920	METAL CRANKSHAFT	1			-0.4MM	0	0
020	15261-23480	METAL CRANKSHAFT	3			STD SET	0	0
020	15261-23930	METAL CRANKSHAFT	3			-0.2MM SET	0	0
020	15261-23940	METAL CRANKSHAFT	3			-0.4MM SET	0	0
021	15261-23530	METAL SIDE 1	2			STD	0.006	0.0132
021	15261-23950	METAL SIDE 1	2			+0.2MM	0.006	0.0132
021	15261-23960	METAL SIDE 1	2			+0.4MM	0.007	0.0154
022	15261-23540	METAL SIDE 2	2			STD	0.007	0.0154
022	15261-23970	METAL SIDE 2	2			+0.2MM	0.006	0.0132
022	15261-23980	METAL SIDE 2	2			+0.4MM	0.007	0.0154

silverform.co.uk

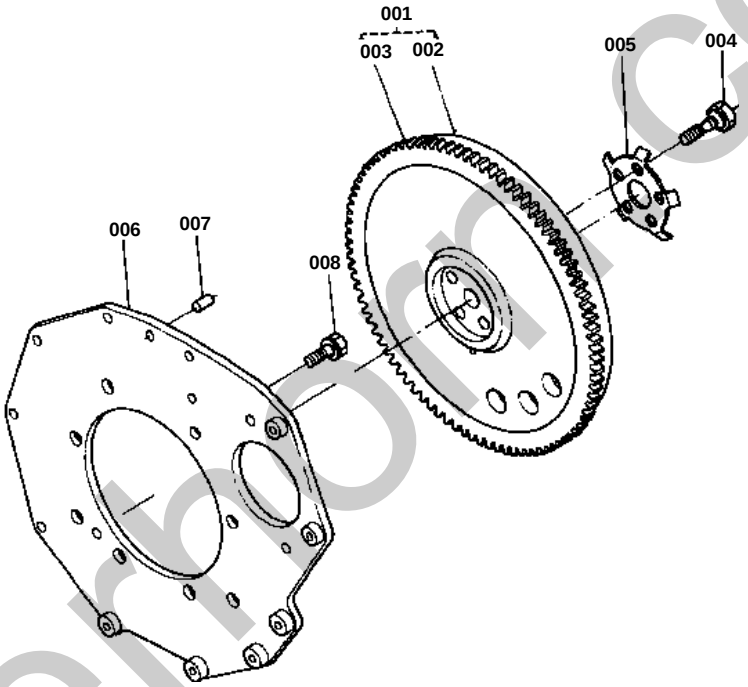

silverhomes.co.uk

FLYWHEEL

↔ Interchangeable; ≠ not interchangeable; ← new for old; → old for new

REF.No	Part No.	Description	Q'ty	S.No.	I/C	REMARKS	Weight (kgf)	Weight (lb)
001	15375-25010	ASSY FLYWHEEL	1			REF.NO.002 003	0	0
002	99999-99999	BLANK	0			ORDER BY REF.NO.001	0	0
003	15261-63820	GEAR RING	1				0	0
004	15261-25160	BOLT FLYWHEEL	5				0.03	0.066
005	15261-25170	WASHER FLYWHEEL	1				0.02	0.044
006	15261-04620	PLATE REAR END	1				2.71	5.962
007	05012-00814	PIN STRAIGHT	1				0.006	0.0132
008	15261-91190	BOLT	8				0.03	0.066

silverhorn.co.uk

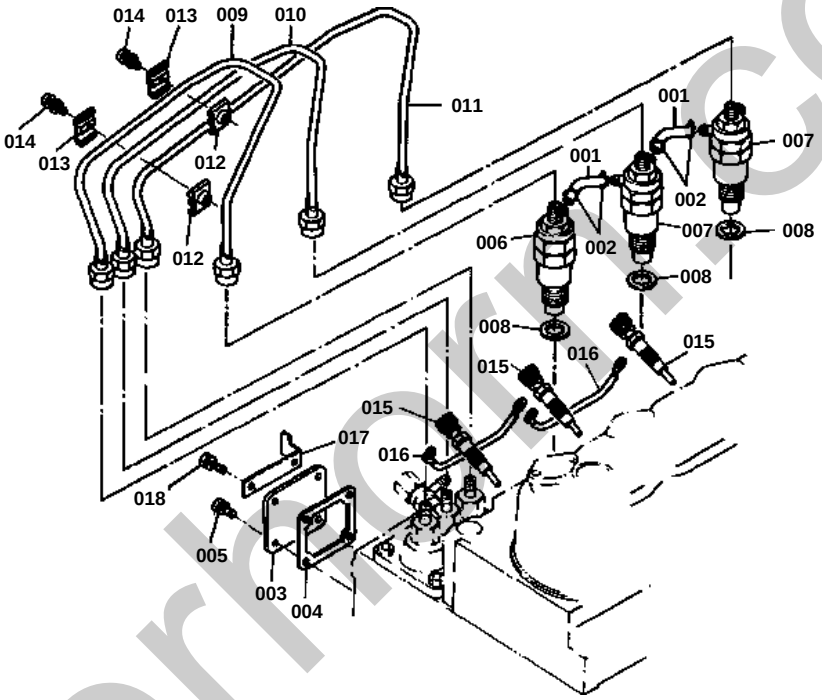

silverhorn.co.uk

NOZZLE HOLDER

↔ Interchangeable; ≠ not interchangeable; ← new for old; → old for new

REF.No	Part No.	Description	Q'ty	S.No.	I/C	REMARKS	Weight (kgf)	Weight (lb)
001	15261-42510	PIPE FUEL OVER FLOW	2				0.004	0.0088
002	14971-42750	CLIP PIPE	4				0.001	0.0022
003	15241-51650	COVER	1				0.082	0.1804
004	15231-05130	GASKET BREATHER	1				0	0
005	01023-50614	BOLT	2				0.005	0.011
006	15271-53000	ASSY HOLDER NOZZLE 1	1				0.26	0.572
007	15271-53020	ASSY HOLDER NOZZLE 2	2				0.26	0.572
008	17011-53620	GASKET	3				0.003	0.0066
009	15261-53710	PIPE INJECTION 1	1				0.103	0.2266
010	15261-53720	PIPE INJECTION 2	1				0.1	0.22
011	15381-53730	PIPE INJECTION 3	1				0.102	0.2244
012	15121-53850	CLAMP PIPE 1	2				0	0
013	15121-53860	CLAMP PIPE 2	2				0	0
014	03024-50520	SCREW WITH WASHER	2				0.004	0.0088
015	15261-65510	GLOW PLUG	3				0.03	0.066
016	15261-65560	CODE GLOW PLUG	2				0.005	0.011
017	66711-43290	BRACKET	1				0.039	0.0858
018	01023-50616	BOLT	2				0.005	0.011

silverhorn.co.uk

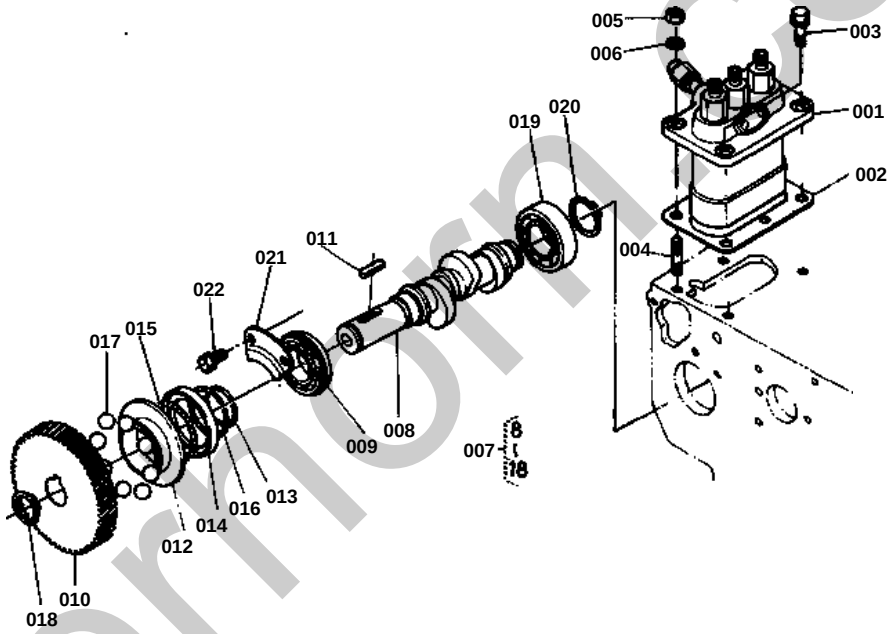

silvermorn.co.uk

INJECTION PUMP

↔ Interchangeable; ≠ not interchangeable; ← new for old; → old for new

REF.No	Part No.	Description	Q'ty	S.No.	I/C	REMARKS	Weight (kgf)	Weight (lb)
001	15381-51010	PUMP INJECTION	1				2.16	4.752
002	15381-52100	SHIM INJECTION PUMP	1				0.022	0.0484
003	01123-50822	BOLT	2				0.012	0.0264
004	15221-91530	STUD	2				0.011	0.0242
005	02156-50080	NUT	2				0.004	0.0088
006	04512-50080	WASHER SPRING	2				0	0
007	15381-16020	CAMSHAFT FUEL	1			REF.NO.008 TO 018	1.1	2.42
008	15381-16170	CAMSHAFT FUEL	1				0.42	0.924
009	08153-06004	BEARING BALL	1				0.07	0.154
010	15261-51150	GEAR INJECTION PUMP	1				0.463	1.0186
011	05712-00520	KEY FEATHER	1				0.004	0.0088
012	15261-55450	SLEEVE GOVERNOR	1				0.058	0.1276
013	15261-55470	CIR-CLIP	1				0.002	0.0044
014	15261-55690	CASE GOVERNOR BALL	1				0	0
015	07715-03205	BALL	30				0.001	0.0022
016	15261-55740	CIR-CLIP	1				0.002	0.0044
017	07715-03217	BALL	8				0.01	0.022
018	04612-00180	CIR-CLIP EXTERNAL	1				0.001	0.0022
019	08103-06004	BEARING BALL	1				0.066	0.1452
020	04612-00200	CIR-CLIP EXTERNAL	1				0.001	0.0022
021	15261-16320	STOPPER FUEL C/SHAFT	1				0.037	0.0814
022	01023-50612	BOLT	2				0.005	0.011

silverhorn.co.uk

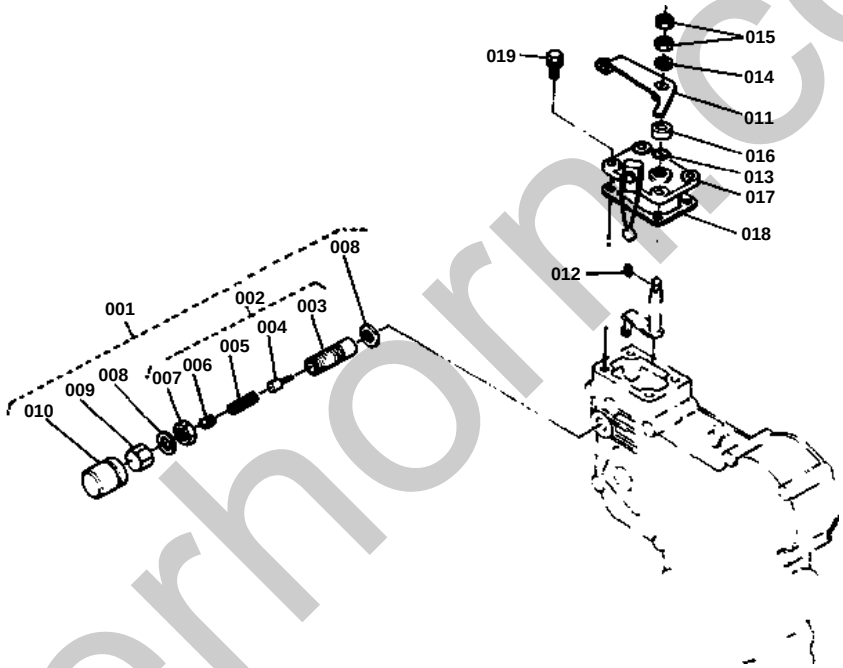

silverhorn.co.uk

SPEED CONTROL PLATE

↔ Interchangeable; ≠ not interchangeable; ← new for old; → old for new

REF.No	Part No.	Description	Q'ty	S.No.	I/C	REMARKS	Weight (kgf)	Weight (lb)
001	15371-54020	ASSY APPARATUS F/RIM	1			REF.NO.002 008 TO 010	0.055	0.121
002	15371-54030	ASSY APPARA.F/RIM SU	1			REF.NO.003 TO 007	0.031	0.0682
003	99999-99999	BLANK	0			ORDER BY REF.NO.002	0	0
004	99999-99999	BLANK	0			ORDER BY REF.NO.002	0	0
005	15371-54230	SPRING	1				0.002	0.0044
006	14301-54430	SCREW SET	1				0.001	0.0022
007	15261-54370	NUT LOCK	1				0.007	0.0154
008	15109-33660	GASKET	2				0.001	0.0022
009	15261-54220	NUT CAP	1				0.02	0.044
010	14301-54420	CAP	1				0.005	0.011
011	15371-57150	LEVER SPEED CONTROL	1				0.035	0.077
012	15261-95010	KEY FEATHER	1				0.001	0.0022
013	04811-00070	O RING	1				0.001	0.0022
014	04013-50060	WASHER PLAIN	1				0	0
015	02012-50060	NUT	2				0	0
016	15261-57380	PLATE COMPRESSION	1				0	0
017	15261-57110	PLATE SPEED CONTROL	1				0.06	0.132
018	15261-57210	GASKET CONTROL PLATE	1				0	0
019	01023-50620	BOLT	4				0.006	0.0132

silverhorn.co.uk

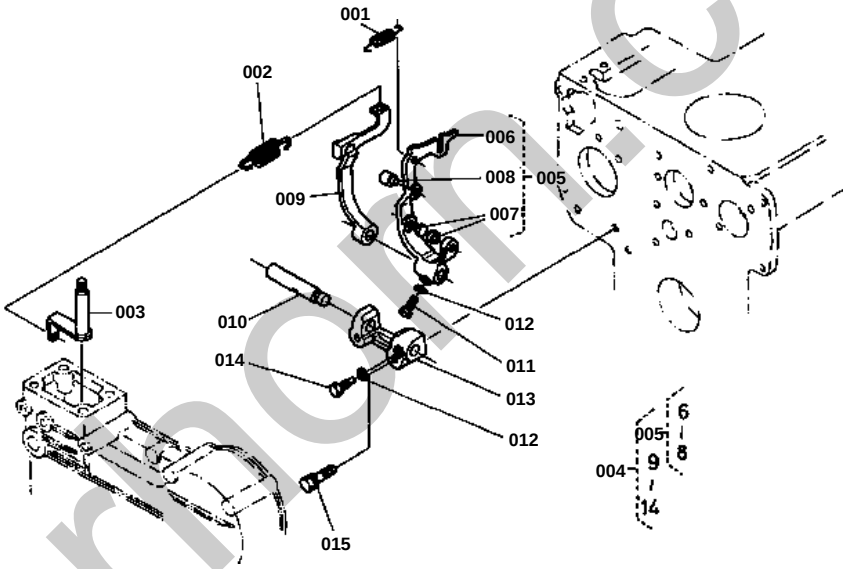

silvermoor.co.uk

GOVERNOR

↔ Interchangeable; ≠ not interchangeable; ← new for old; → old for new

REF.No	Part No.	Description	Q'ty	S.No.	I/C	REMARKS	Weight (kgf)	Weight (lb)
001	15221-56480	SPRING START	1				0.008	0.0176
002	15371-56410	SPRING GOVERNOR	1				0.006	0.0132
003	15261-56020	LEVER GOVERNOR	1				0.026	0.0572
004	15381-56050	ASSY LEVER FORK	1			REF.NO.005 009 TO 014	0.254	0.5588
005	15381-56040	ASSY FORK LEVER 1	1			REF.NO.006 TO 008	0.114	0.2508
006	99999-99999	BLANK	0			ORDER BY REF.NO.005	0	0
007	99999-99999	BLANK	0			ORDER BY REF.NO.005	0	0
009	15261-56130	LEVER FORK 2	1				0.063	0.1386
010	15261-56150	SHAFT FORK LEVER	1				0.032	0.0704
011	01053-50516	BOLT	1				0.003	0.0066
012	04512-50050	WASHER SPRING	2				0	0
013	15261-56230	HOLDER FORK LEVER	1				0.038	0.0836
014	15261-66410	BOLT	1				0.003	0.0066
015	01023-50628	BOLT	2				0.015	0.033

silverhorn.co.uk

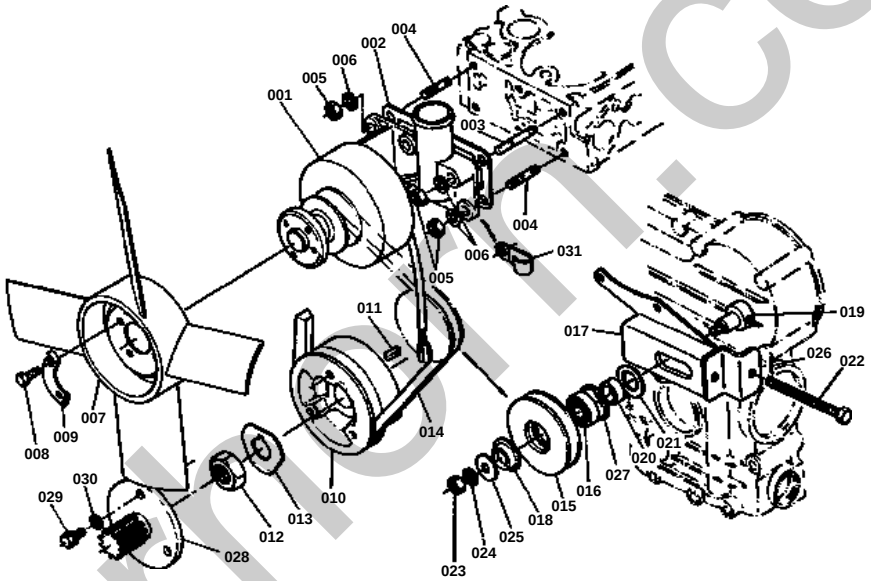

silverhorn.co.uk

DYNAMO

↔ Interchangeable; ≠ not interchangeable; ← new for old; → old for new

REF.No	Part No.	Description	Q'ty	S.No.	I/C	REMARKS	Weight (kgf)	Weight (lb)
001	15372-64010	DYNAMO	1				1.7	3.74
002	15261-72920	GASKET WATER FLANGE	1				0	0
003	01513-50645	STUD	1				0.011	0.0242
004	01513-50616	STUD	5				0.004	0.0088
005	02056-50060	NUT	6				0.002	0.0044
006	04512-50060	WASHER SPRIMG	6				0	0
007	15553-74110	FAN	1				0.3	0.66
008	01053-50610	BOLT	4				0.004	0.0088
009	15131-74230	WASHER FAN	2				0.005	0.011
010	15372-74280	PULLEY FAN DRIVE	1				0.9	1.98
011	05712-00515	KEY FEATHER	1				0.003	0.0066
012	15261-23360	NUT CRANKSHAFT	1				0.034	0.0748
013	15372-23380	WASHER CRANK SHAFT	1				0.007	0.0154
014	15231-72530	BELT FAN	1				0.066	0.1452
015	14301-74320	PULLEY TENSION	1				0	0
016	15271-74190	BEARING BALL	1				0.065	0.143
017	15371-74410	SUPPORT TENSION	1				0.33	0.726
018	15231-74770	COVER TENSION PULLEY	1				0.004	0.0088
019	15231-74330	SHAFT TENSION PULLEY	1				0.093	0.2046
020	15261-74430	COLLAR TENSION	1				0.013	0.0286
021	14301-74780	COVER TENSION PULLEY	1				0.005	0.011
022	15371-74970	BOLT TENSION	1				0.032	0.0704
023	02018-50100	NUT	1				0.011	0.0242
024	04512-50100	WASHER SPRING	1				0	0
025	04013-50100	WASHER PLAIN	1				0	0
026	99999-99999	BLANK	0			OBTAINED LOCALLY	0	0
027	04611-00400	CIR-CLIP INTERNAL	1				0.005	0.011
028	66704-88530	FLANGE	1				0.4	0.88
029	01123-50825	BOLT	3				0.013	0.0286
030	04013-50080	WASHER PLAIN	3				0	0
031	15272-67570	CLAMP CORD	1				0.003	0.0066

silverhorn.co.uk

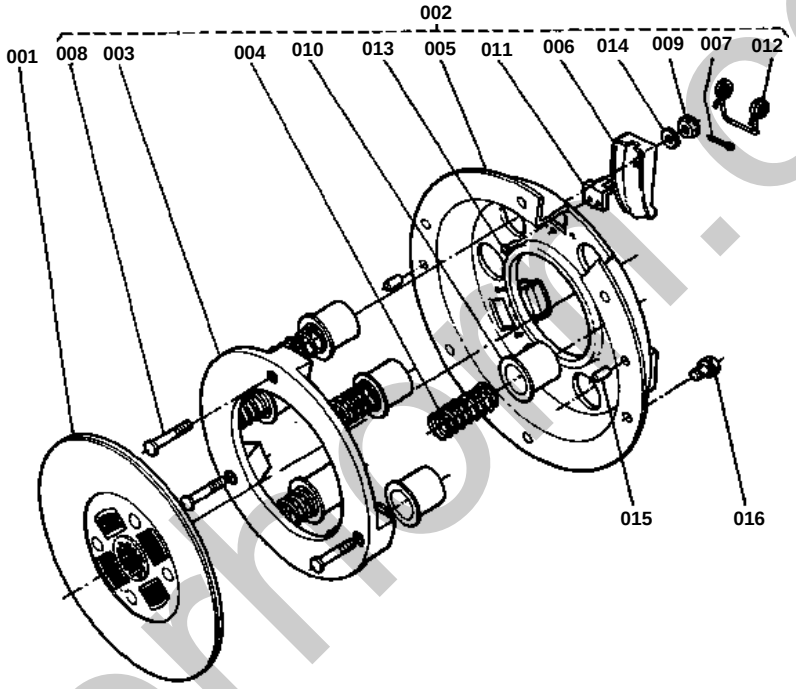

silverfoil.co.uk

CLUTCH

↔ Interchangeable; ≠ not interchangeable; ← new for old; → old for new

REF.No	Part No.	Description	Q'ty	S.No.	I/C	REMARKS	Weight (kgf)	Weight (lb)
001	66591-13300	ASSY DISK CLUTCH	1				0.9	1.98
002	66591-13400	ASSY PLATE PRESSURE	1			REF.NO.003 TO 014	3.1	6.82
003	99999-99999	BLANK	0			ORDER BY REF.NO.002	0	0
004	66591-13310	SPRING PRESSURE	6				0.058	0.1276
005	99999-99999	BLANK	0			ORDER BY REF.NO.002	0	0
006	32200-14540	LEVER CLUTCH	3				0.05	0.11
007	32200-14500	PIN SPLIT	3				3.1	6.82
008	32200-14570	BOLT	3				0.009	0.0198
009	32130-14580	NUT	3				0.003	0.0066
010	32130-14590	CAP PRESSURE SPRING	6				0.024	0.0528
011	32130-14620	SEAT LEVER	3				0.017	0.0374
012	32130-14630	SPRING RETURN	3				0.006	0.0132
013	32130-14640	RIVET	6				0.001	0.0022
014	32130-14650	WASHER RELEASE YOKE	3				0.002	0.0044
015	05012-00614	PIN STRAIGHT	2				0.004	0.0088
016	01123-50816	BOLT	6				0.011	0.0242

silverhorn.co.uk

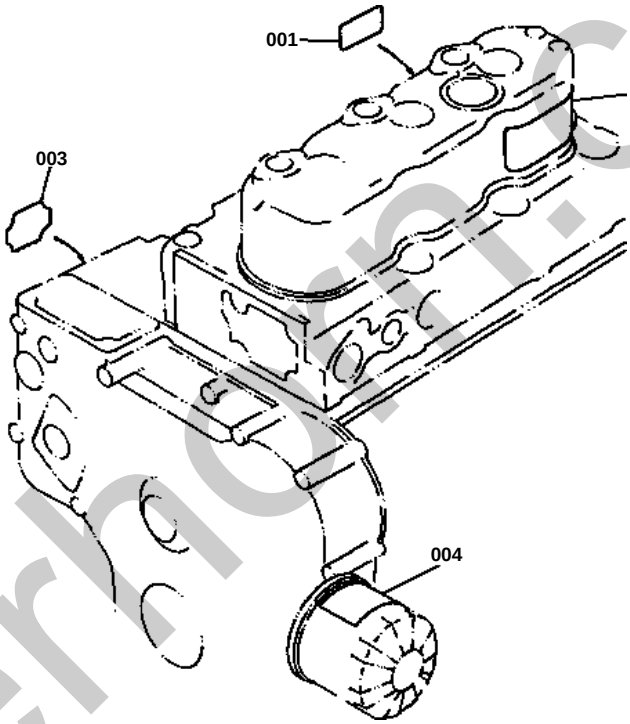

silverhorn.co.uk

NAME PLATE

↔ Interchangeable; ≠ not interchangeable; ← new for old; → old for new

REF.No	Part No.	Description	Q'ty	S.No.	I/C	REMARKS	Weight (kgf)	Weight (lb)
001	15232-88210	LABEL GLOW PLUG	1				0.001	0.0022
002	15372-87310	LABEL OIL	1				0.001	0.0022
003	15372-87230	LABEL INSTRUCTION	1				0.001	0.0022
004	15372-87210	LABEL INSTRUCTION	1				0.001	0.0022

silverhorn.co.uk

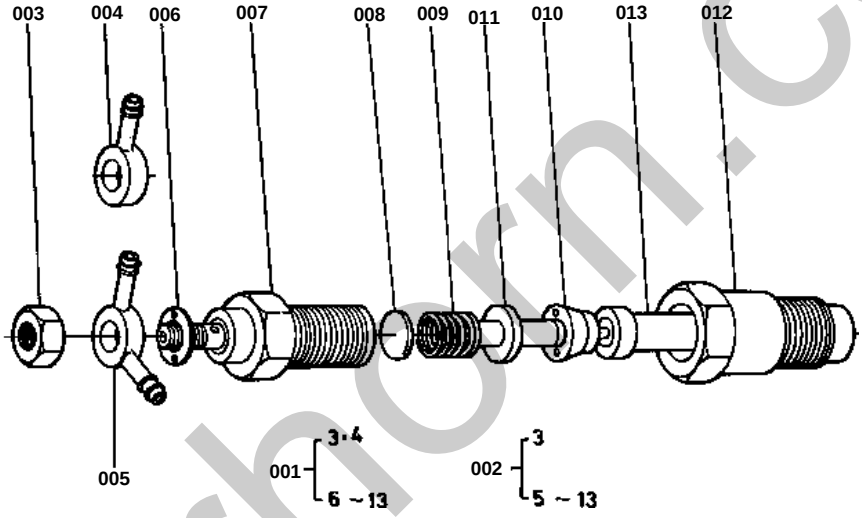

silverhorn.co.uk

NOZZLE HOLDER

↔ Interchangeable; ≠ not interchangeable; ← new for old; → old for new

REF.No	Part No.	Description	Q'ty	S.No.	I/C	REMARKS	Weight (kgf)	Weight (lb)
001	15271-53000	ASSY HOLDER NOZZLE 1	1			REF.NO.003 004 AND 006 TO 013	0.26	0.572
002	15271-53020	ASSY HOLDER NOZZLE 2	2			REF.NO.003 005 TO 013	0.26	0.572
003	15221-92020	NUT	3				0.011	0.0242
004	15221-95680	JOINT EYE 1	1				0.021	0.0462
005	15221-95690	JOINT EYE 2	1				0.022	0.0484
006	15221-94020	WASHER PLAIN	3				0.002	0.0044
007		BLANK	0			ORDER BY REF.NO.001 OR 002	0	0
008	15221-53230	WASHER ADJUSTING	3				0.001	0.0022
009	15221-53170	SPRING NOZZLE	3				0.01	0.022
010	15221-53350	PIECE DISTANCE	3				0.016	0.0352
011	15221-53160	ROD PUSH	3				0.003	0.0066
012	15221-53280	NUT NOZZLE	3				0.068	0.1496
013	15021-53610	PIECE NOZZLE	3				0	0

silverhorn.co.uk

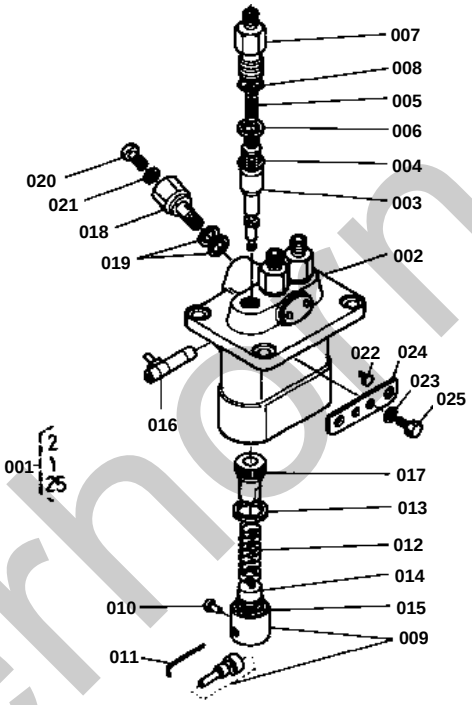

silverhorn.co.uk

INJECTION PUMP

↔ Interchangeable; ≠ not interchangeable; ← new for old; → old for new

REF.No	Part No.	Description	Q'ty	S.No.	I/C	REMARKS	Weight (kgf)	Weight (lb)
001	15381-51010	ASSY PUMP INJECTION	1			REF.NO.002 TO 025	2.16	4.752
002	99999-99999	BLANK	0			ORDER BY REF.NO.001	0	0
003	15261-51050	ELEMENT PUMP	3				0.04	0.088
004	15261-51030	VALVE DELIV. VALVE	3				0.011	0.0242
005	15331-51230	SPRING DELIV. VALVE	3				0.001	0.0022
006	15331-51240	GASKET DELIV. VALVE	3				0.001	0.0022
007	15331-51220	HOLDER DELIV. VALVE	3				0.053	0.1166
008	15331-96760	O RING	3				0.001	0.0022
009	15331-51070	ASSY TAPPET	3				0.036	0.0792
010	15331-51250	PIN TAPPET GUIDE	3				0.001	0.0022
011	15331-51430	PIN CLAMP	3				0.001	0.0022
012	15331-51280	SPRING PLUNGER	3				0	0
013	15331-51270	SEAT SPRING UPPER	3				0.001	0.0022
014	15331-51290	SEAT SPRING UNDER	3				0.001	0.0022
015	15381-51490	SHIM	3				0.008	0.0176
016	15331-51060	RACK CONTROL	1				0.036	0.0792
017	15331-51380	SLEEVE CONTROL	3				0.012	0.0264
018	15241-51320	SCREW	1				0.034	0.0748
019	15331-96650	GASKET	1				0.001	0.0022
020	15331-51350	SCREW AIR BREEDER	1				0	0
021	15331-96660	GASKET	1				0.001	0.0022
022	15331-51480	COLLAR	2				0.005	0.011
023	15381-94090	WASHER SPRING	2				0.002	0.0044
024	15381-51390	PLATE ADJUSTING	1				0.008	0.0176
025	15331-91010	BOLT	2				0.034	0.0748

silverhorn.co.uk

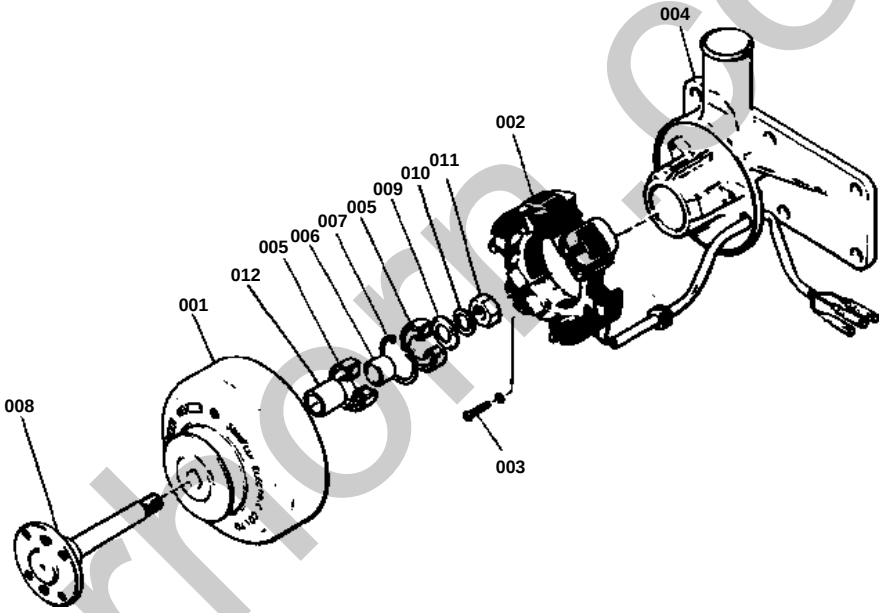

silverhopp.co.uk

DYNAMO

↔ Interchangeable; ≠ not interchangeable; ← new for old; → old for new

REF.No	Part No.	Description	Q'ty	S.No.	I/C	REMARKS	Weight (kgf)	Weight (lb)
001	15372-64040	ROTOR	1				0.95	2.09
002	15372-64290	ASSY STATOR	1				0.23	0.506
003	15261-93010	SCREW	3				0.003	0.0066
004	15372-64360	BASE STATOR	1				0	0
005	15531-74180	BEARING BALL	2				0.04	0.088
006	15261-64150	COLLAR	1				0.02	0.044
007	15261-95470	CIR-CLIP INTERNAL	1				0.002	0.0044
008	15372-74140	SHAFT FAN	1				0.22	0.484
009	15261-94020	WASHER PLAIN	1				0.007	0.0154
010	15261-94070	WASHER SPRING	1				0.003	0.0066
011	15261-92030	NUT	1				0.01	0.022
012	15261-64140	COLLAR	1				0.025	0.055

silverhorn.co.uk

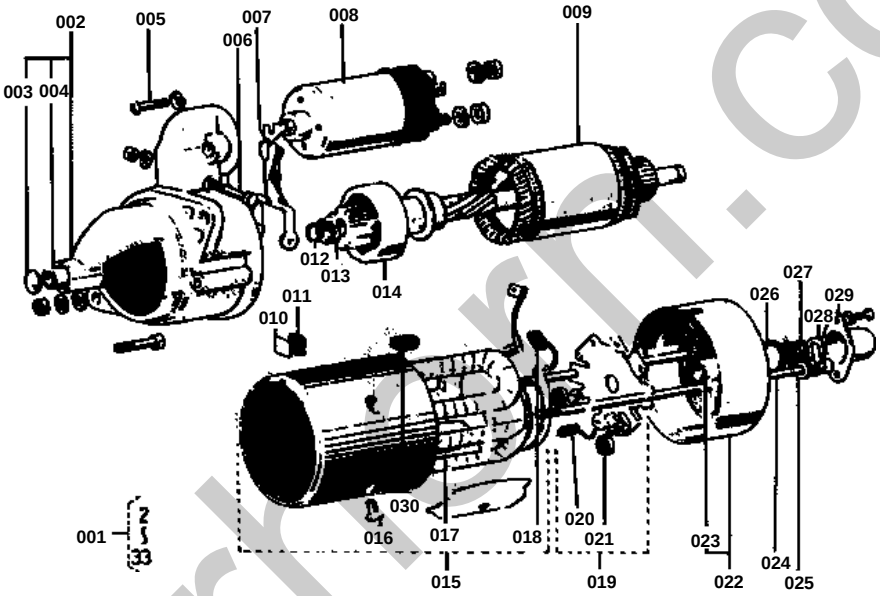

silverhorn.co.uk

STARTER

↔ Interchangeable; ≠ not interchangeable; ← new for old; → old for new

REF.No	Part No.	Description	Q'ty	S.No.	I/C	REMARKS	Weight (kgf)	Weight (lb)
001	15231-63010	ASSY STARTER	1			REF.NO.002 TO 033	0	0
002	15231-63030	DRIVE END FRAME	1				0.45	0.99
003	15231-63220	CAP END FRAME	1				0.001	0.0022
004	17016-63250	BUSH	1				0.006	0.0132
005	15221-91370	SCREW	2				0.01	0.022
006	15221-91020	BOLT	1				0.01	0.022
007	15221-63050	LEVER DRIVE	1				0.044	0.0968
008	15231-63020	MAGNET SWITCH	1				0.692	1.5224
009	15231-63072	ARMATURE	1				1.635	3.597
010	15231-63680	PLATE INSULATOR	1				0.007	0.0154
011	15231-63690	WASHER INSULATOR	1				0.004	0.0088
012	15221-94820	CIR-CLIP EXTERNAL	1				0.001	0.0022
013	15321-63250	COLLAR	1				0.005	0.011
014	15231-63040	CLUTCH	1				0.28	0.616
015	15231-63080	YOKE	1				1.8	3.96
016	15221-91380	SCREW	4				0.008	0.0176
017	15221-63090	COIL FIELD	1				0	0
018	15221-63370	BRUSH	1				0.006	0.0132
019	15221-63380	HOLDER BRUSH	1				0.13	0.286
020	15221-63360	BRUSH	1				0.006	0.0132
021	15221-63390	SPRING BRUSH	2				0.003	0.0066
022	15221-63200	END FRAME	1				0.254	0.5588
023	15221-63250	BUSH	1				0.006	0.0132
024	15221-63320	BOLT THROUGH	2				0.017	0.0374
025	15231-94030	WASHER PLAIN	2				0.002	0.0044
026	15221-63520	PACKING	1				0.005	0.011
027	15221-63490	SPRING RETURN	1				0.004	0.0088
028	15221-94030	HOLDER SPRING	1				0.003	0.0066
029	15221-63510	CAP END FRAME	1				0.01	0.022
030	15221-96680	BUSH INSUTATOR	1				0.002	0.0044
031	15231-94040	WASHER PLAIN	1			NOT SHOWN IN FIG.	0.002	0.0044
032	15321-94010	WASHER PLAIN	1			NOT SHOWN IN FIG.	0.001	0.0022
033	15231-94040	WASHER PLAIN	1			NOT SHOWN IN FIG.	0.002	0.0044

silvermorn.co.uk

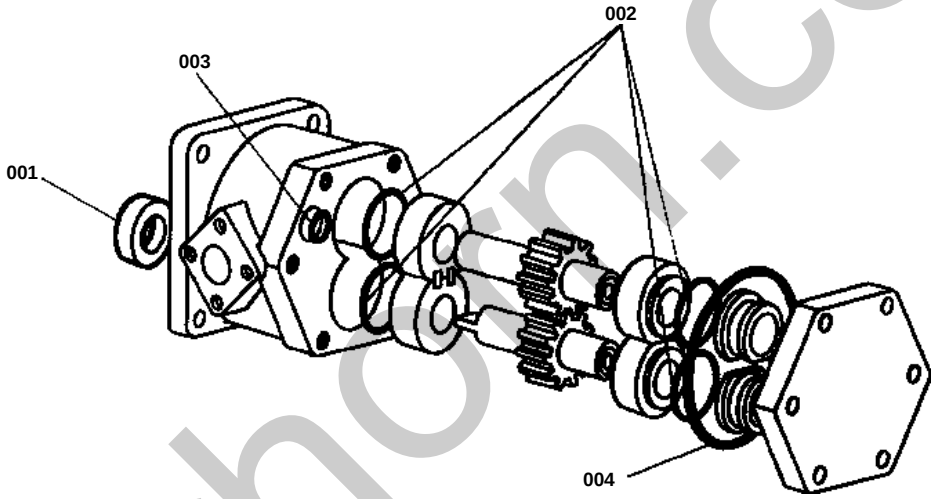

silverhorn.co.uk

OIL PRESSURE PUMP

↔ Interchangeable; ≠ not interchangeable; ← new for old; → old for new

REF.No	Part No.	Description	Q'ty	S.No.	I/C	REMARKS	Weight (kgf)	Weight (lb)
001	67211-76190	SEAL OIL	1				0	0
002	04810-00220	O RING	4				0.001	0.0022
003	04810-00050	O RING	1				0.001	0.0022
004	04810-50500	O RING	1				0.005	0.011

silverhorn.co.uk

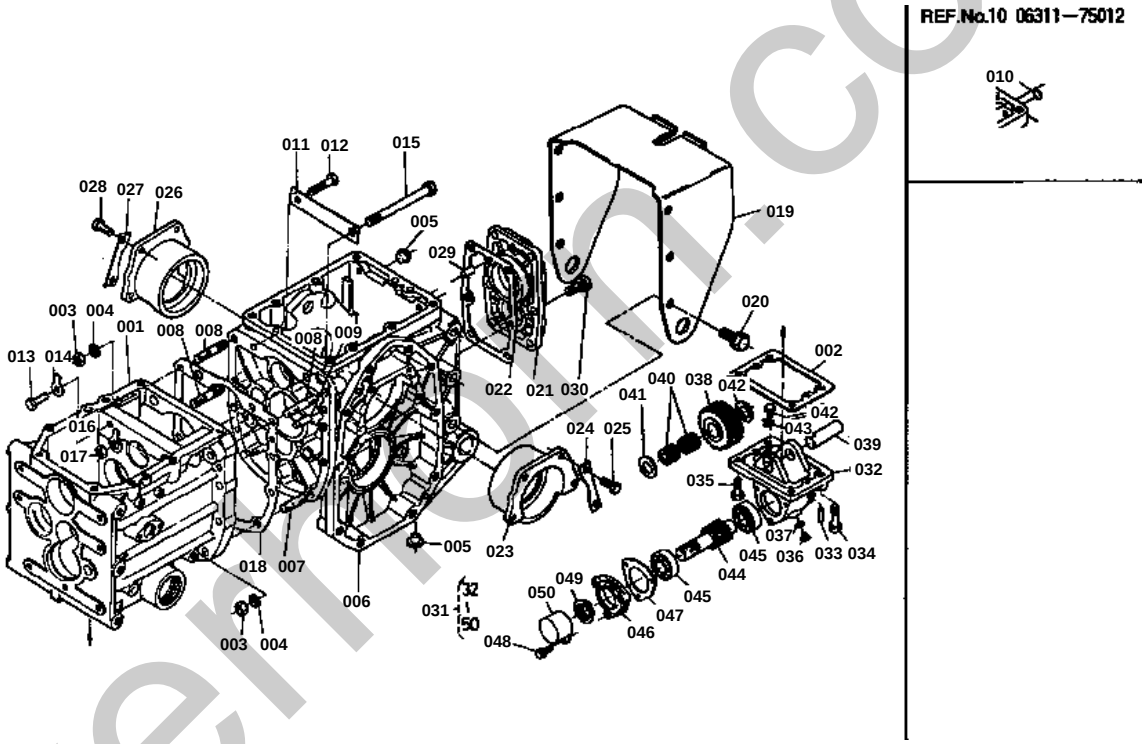

silverhorn.co.uk

TRANSMISSION CASE

↔ Interchangeable; ≠ not interchangeable; ← new for old; → old for new

REF.No	Part No.	Description	Q'ty	S.No.	I/C	REMARKS	Weight (kgf)	Weight (lb)
001	66204-11110	CASE TRANSMISSION	1				0	0
002	66204-21220	GASKET	1				0	0
003	02118-50100	NUT	9				0.005	0.011
004	04512-50100	WASHER SPRING	9				0	0
005	67111-11140	PLUG M12	4				0	0
005	67211-11140	PLUG M12	4	>=10001			0.001	0.0022
006	66611-11127	CASE DIFFERENTIAL	1	<=10430			8	17.6
006	66611-11129	CASE DIFFERENTIAL	1	>=10001			0	0
007	01555-51035	STUD	6				0.029	0.0638
008	01555-51050	STUD	3				0.038	0.0836
009	66611-11160	PIN KNOCK	2				0.01	0.022
010	06311-75012	PLUG EXPANSION	2	<=10430			0.002	0.0044
011	66591-11440	PLATE LOCK	1				0.014	0.0308
012	01153-50838	BOLT	1				0.017	0.0374
013	01153-50825	BOLT	1				0.012	0.0264
014	04111-50080	WASHER TONGUED	1				0.001	0.0022
015	66204-11140	BOLT	1				0.097	0.2134
016	04111-50100	WASHER TONGUED	1				0.003	0.0066
017	02118-50100	NUT	1				0.005	0.011
018	66611-11130	GASKET	1				0	0
019	66704-11214	COVER PTO	1				1.5	3.3
020	01123-51235	BOLT	6				0.041	0.0902
021	66706-12210	COVER REAR	1				1.21	2.662
022	66611-12220	GASKET	1				0	0
023	66611-11510	HOLDER DIF.BEARING L	1				0.78	1.716
024	66611-11520	PLATE LOCK	2				0.01	0.022
025	01150-50820	BOLT	4				0.011	0.0242
026	66611-11812	HOLDER DIF.BEARING R	1				0.72	1.584
027	66611-11520	PLATE LOCK	2				0.01	0.022
028	01150-50820	BOLT	4				0.011	0.0242
029	05012-00816	PIN STRAIGHT	1				0.007	0.0154
030	01120-51025	BOLT	6				0	0
031	66204-21200	KIT MID PTO	1	<=10217		REF.NO.032 TO 050	0	0
031	66204-21202	KIT MID PTO	1	>=10001		REF.NO.032 TO 050	3	6.6
032	96380-25110	CASE DRIVE	1				1.8	3.96
033	05012-00816	PIN	2				0.007	0.0154
034	01123-51040	BOLT	2				0.03	0.066
035	01123-51028	BOLT	2				0.025	0.055
036	06331-35016	PLUG	1				0.04	0.088
037	04717-01600	WASHER SEAL	1				0.003	0.0066
038	96380-25120	GEAR 24T	1	<=10217			0	0
038	96380-25123	GEAR 24T	1	>=10001			0.69	1.518
039	96380-25130	SHAFT	1				0.166	0.3652
040	08822-23015	BEARING NEEDLE	2				0.025	0.055
041	96380-25140	COLLAR	2				0.014	0.0308
042	01150-50814	BOLT	1				0.01	0.022
043	96380-25150	WASHER	1				0.003	0.0066
044	96380-25160	SHAFT	1				0.51	1.122
045	08101-06205	BEARING BALL	2				0.14	0.308
046	96380-25170	COVER CASE	1				0.195	0.429
047	96380-25180	GASKET	1				0.002	0.0044
048	01120-50825	BOLT	3				0	0
049	96380-25190	SEAL OIL	1				0.013	0.0286
050	66204-21250	COVER	1				0.07	0.154

silverthorn.co.uk

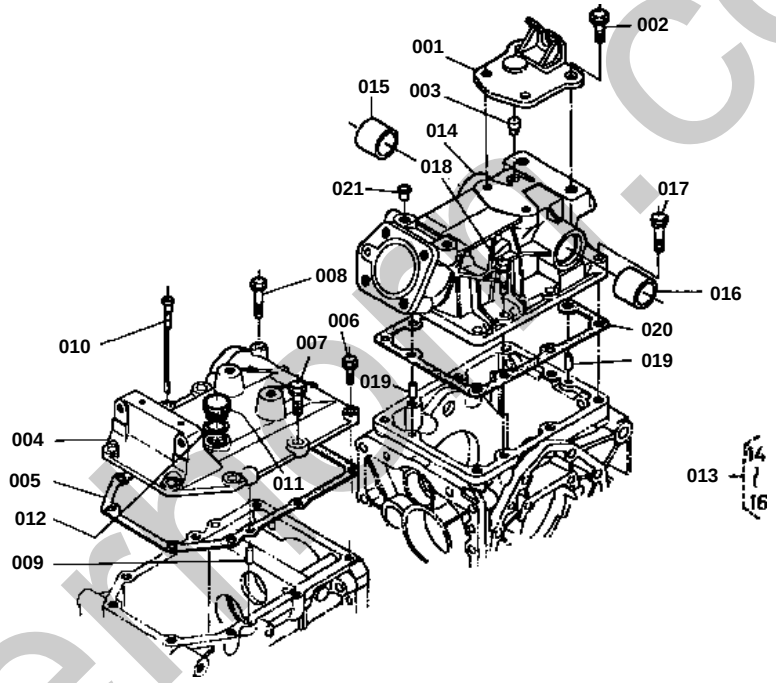

silvermill.co.uk

CASE COVER

↔ Interchangeable; ≠ not interchangeable; ← new for old; → old for new

REF.No	Part No.	Description	Q'ty	S.No.	I/C	REMARKS	Weight (kgf)	Weight (lb)
001	66611-11910	BRACKET CHAIN	1				0.607	1.3354
002	01123-51230	BOLT	2				0.04	0.088
003	66591-11350	BREATHER	1				0.002	0.0044
004	66204-12410	COVER CASE FRONT	1				3.6	7.92
005	66204-12450	GASKET	1				0	0
006	01120-50828	BOLT	1				0	0
007	01123-51035	BOLT	6				0.025	0.055
008	01123-50845	BOLT	1				0.02	0.044
009	05012-00816	PIN STRAIGHT	2				0.007	0.0154
010	66591-11380	GAUGE OIL	1				0.01	0.022
011	66591-11460	CAP	1				0.016	0.0352
012	04711-00400	GASKET	1				0.001	0.0022
012	04717-02150	WASHER SEAL	1	>=10001			0.004	0.0088
012	04713-00400	GASKET	1	>=10001			0.001	0.0022
013	66711-12500	ASSY COVER CASE REAR	1			REF.NO.014 TO 016	0	0
014	66611-12510	COVER CASE REAR	1				3.83	8.426
015	66591-36710	BUSH	1				0.049	0.1078
016	66591-36720	BUSH	1				0.044	0.0968
017	01123-51040	BOLT	3				0.03	0.066
018	01123-51035	BOLT	6				0.025	0.055
019	05012-00816	PIN STRAIGHT	2				0.007	0.0154
020	66611-12520	GASKET	1				0	0
021	66591-54390	PLUG 3	2				0.001	0.0022

silverhorn.co.uk

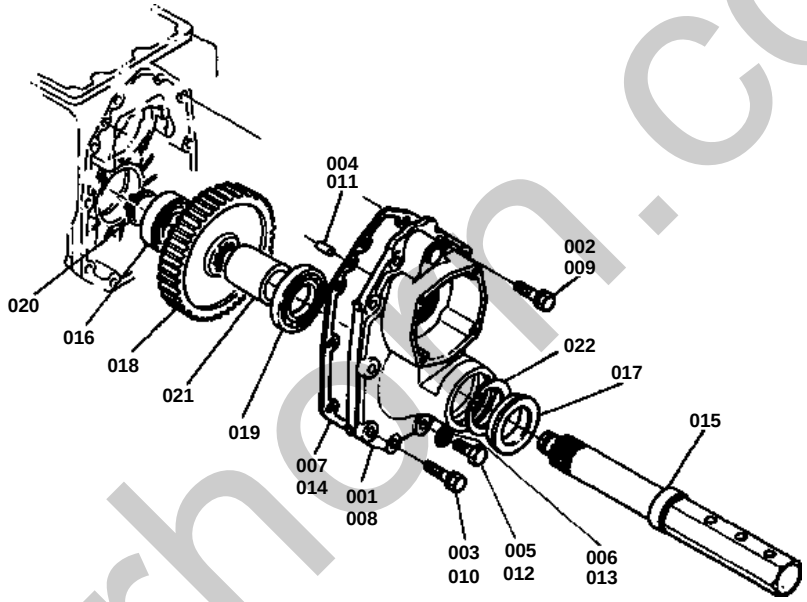

silverham.co.uk

AXLE CASE

↔ Interchangeable; ≠ not interchangeable; ← new for old; → old for new

REF.No	Part No.	Description	Q'ty	S.No.	I/C	REMARKS	Weight (kgf)	Weight (lb)
001	66611-12614	CASE AXLE LH	1				0	0
002	01123-51035	BOLT	4				0.025	0.055
003	01123-51250	BOLT	6				0.055	0.121
004	05012-00816	PIN STRAIGHT	2				0.007	0.0154
005	06331-35012	PLUG	1				0.022	0.0484
006	04717-01200	WASHER SEAL	1				0.002	0.0044
007	66591-11240	GASKET	1				0	0
008	66611-12714	CASE AXLE RH	1				0	0
009	01123-51035	BOLT	4				0.025	0.055
010	01123-51250	BOLT	6				0.055	0.121
011	05012-00816	PIN STRAIGHT	2				0.007	0.0154
012	06331-35012	PLUG	1				0.022	0.0484
013	04717-01200	WASHER SEAL	1				0.002	0.0044
014	66591-11240	GASKET	1				0	0
015	66611-17114	AXLE REAR	2				4.64	10.208
016	08101-06306	BEARING BALL	2				0.335	0.737
017	66611-17120	SEAL OIL	2				0.09	0.198
018	66611-17130	GEAR SPUR 55	2				2.4	5.28
019	08101-06208	BEALING BALL	2				0.355	0.781
020	04612-00300	CIR-CLIP EXTERNAL	2				0.003	0.0066
021	66611-17143	COLLAR	2				0.515	1.133
022	04611-00800	CIR-CLIP INTERNAL	2				0.02	0.044

silverhorn.co.uk

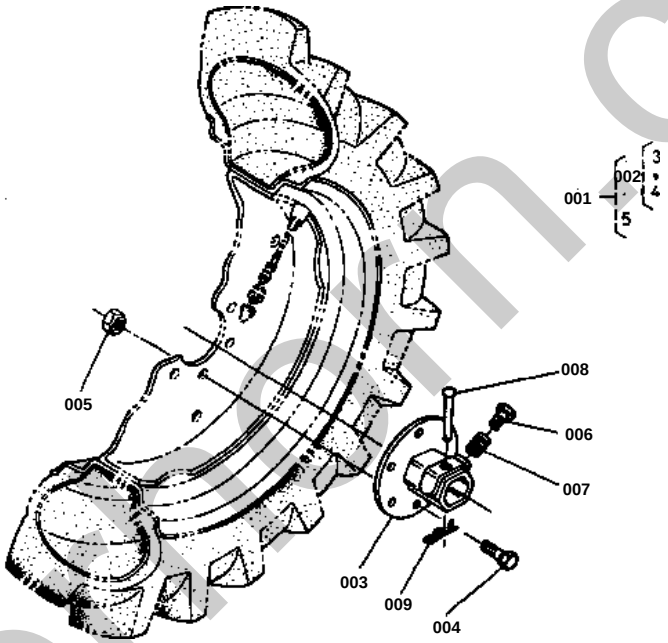

silverfarm.co.uk

WHEEL HUB [AMERICA]

↔ Interchangeable; ≠ not interchangeable; ← new for old; → old for new

REF.No	Part No.	Description	Q'ty	S.No.	I/C	REMARKS	Weight (kgf)	Weight (lb)
001	66704-17200	ASSY HUB WHEEL	2			REF.NO.002 005	2.95	6.49
002	66704-17300	ASSY BOLT WHEEL HUB	2			REF.NO.003 004	0	0
003	66704-17150	HUB WHEEL	2				2.6	5.72
004	66704-17310	BOLT	12				0	0
005	35340-11390	NUT	12				0.03	0.066
006	63733-17250	BOLT WHEEL HUB SET	2				0.08	0.176
007	63512-17230	SPRING SET BOLT	2				0.014	0.0308
008	66621-17160	PIN AXLE	2				0.05	0.11
009	62131-17290	PIN SNAP	2				0.004	0.0088

silverhorn.co.uk

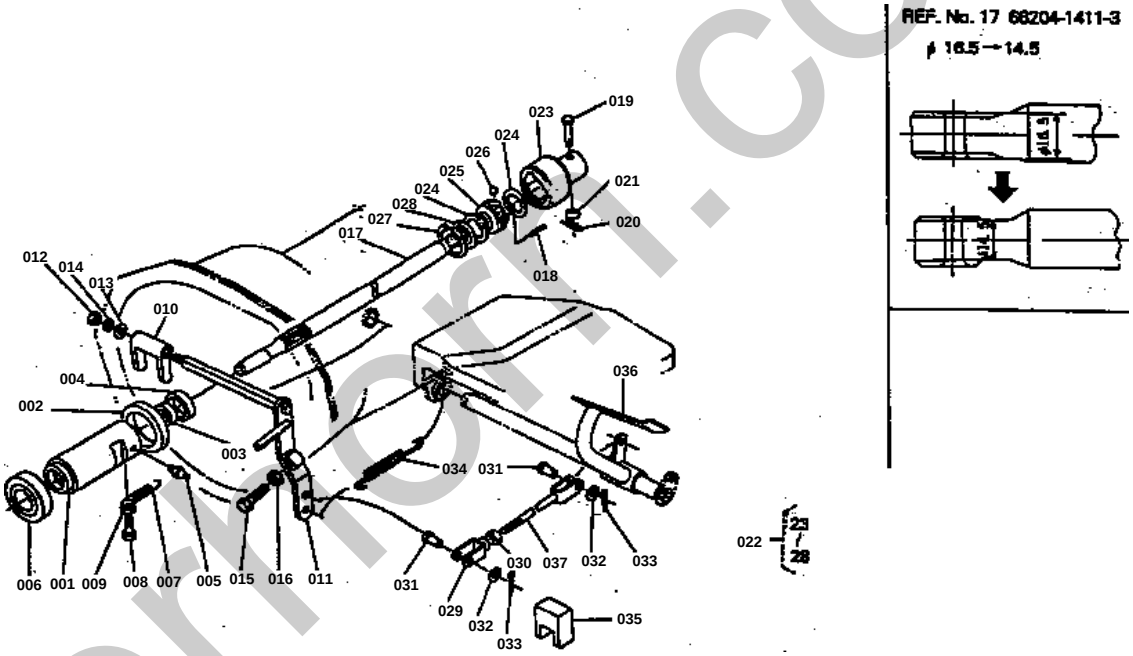

silvermorr.co.uk

CLUTCH ROD

↔ Interchangeable; ≠ not interchangeable; ← new for old; → old for new

REF.No	Part No.	Description	Q'ty	S.No.	I/C	REMARKS	Weight (kgf)	Weight (lb)
001	66621-13314	HOLDER RELEASE BRG.	1				0.63	1.386
002	66621-51420	SEAL OIL	1				0.011	0.0242
003	09030-20328	SEAL OIL	1				0.009	0.0198
004	09030-20357	SEAL OIL	1				0.009	0.0198
005	06613-10675	NIPPLE GREASE	1				0.003	0.0066
006	32150-14820	BEARING THRUST BALL	1				0.2	0.44
007	66611-13340	SPRING RELEASE	1				0.006	0.0132
008	01202-50610	BOLT	1				0.004	0.0088
009	04013-50060	WASHER PLAIN	1				0	0
010	66621-13350	FORK CLUTCH RELEASE	1				0.095	0.209
011	66204-13310	ROD CLUTCH	1				0.42	0.924
012	02114-50080	NUT	1				0.005	0.011
013	04012-50080	WASHER PLAIN	1				0.001	0.0022
014	04512-50080	WASHER SPRING	1				0	0
015	66711-13320	BOLT ADJUSTING	1				0.028	0.0616
016	02116-50100	NUT	1				0.004	0.0088
017	66204-14110	SHAFT PROPELLER	1	<=10740			0	0
017	66204-14113	SHAFT PROPELLER	1	>=10001			1	2.2
018	05411-00532	PIN SPRING	1				0.003	0.0066
019	66611-14120	PIN JOINT	1				0	0
020	66611-14130	PIN SET	1				0.001	0.0022
021	04717-00500	WASHER SEAL	1				0.001	0.0022
022	66611-14100	ASSY BALL JOINT	1			REF.NO.023 TO 028	0.307	0.6754
023	66611-14140	COUPLING BALL OUTER	1				0.2	0.44
024	66611-14150	GASKET BALL JOINT	2				0	0
025	66611-14160	COUPLING BALL INNER	1				0.076	0.1672
026	07715-00803	BALL	4				0.004	0.0088
027	04611-00350	CIP-CLIP INTERNAL	1				0.003	0.0066
028	66611-14170	RETAINER GASKET	1				0	0
029	66621-43130	U-JOINT	1				0.06	0.132
030	02112-50080	NUT	1				0.003	0.0066
031	05122-50825	PIN JOINT	2				0.011	0.0242
032	04012-50080	WASHER PLAIN	2				0.001	0.0022
033	05511-50215	PIN SPLIT	2				0.001	0.0022
034	66204-43250	SPRING	1				0.13	0.286
035	66711-42150	SPACER PEDAL	1				0.027	0.0594
036	66711-42120	PEDAL CLUTCH	1				0.926	2.0372
037	66204-42110	ROD CLUTCH	1				0.115	0.253

silvehorn.co.uk

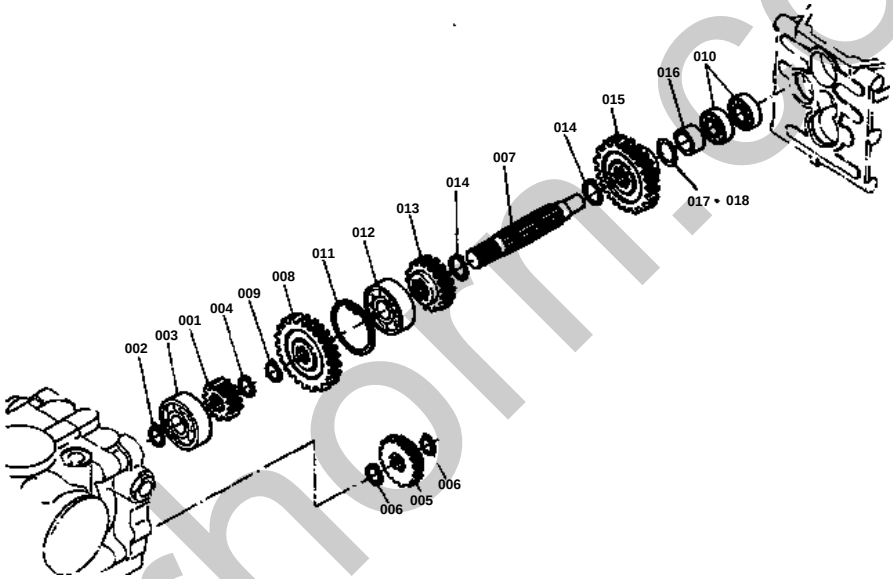

silverhorn.co.uk

1st SHAFT 4th SHAFT

↔ Interchangeable; ≠ not interchangeable; ← new for old; → old for new

REF.No	Part No.	Description	Q'ty	S.No.	I/C	REMARKS	Weight (kgf)	Weight (lb)
001	66204-14120	GEAR SPUR 13	1				0.085	0.187
002	04612-00200	CIR-CLIP ECXTERNAL	1				0.001	0.0022
003	08101-06304	BEARING BALL	1				0.146	0.3212
004	04612-00190	CIR-CLIP EXTERNAL	1				0.001	0.0022
005	66104-14150	GEAR SPUR 17	1				0.17	0.374
006	04612-00200	CIR-CLIP EXTERNAL	2				0.001	0.0022
007	66204-14410	SHAFT 4	1				0.35	0.77
008	66204-14420	GEAR SPUR 24	1				0.31	0.682
009	04612-00200	CIR-CLIP EXTERNAL	1				0.001	0.0022
010	08101-06202	BEARING BALL	2				0.044	0.0968
011	04611-00520	CIR-CLIP INTERNAL	1				0.009	0.0198
012	08101-06304	BEARING BALL	1				0.146	0.3212
013	66204-14430	GEAR SPUR 15	1				0.145	0.319
014	04612-00220	CIR-CLIP EXTERNAL	2				0.001	0.0022
015	66204-14440	GEAR SPUR 23	1				0.35	0.77
016	66611-14470	COLLAR	1				0.019	0.0418
017	66204-81410	SHIM A	1				0.001	0.0022
018	66204-81420	SHIM B	1				0.001	0.0022

silverhorn.co.uk

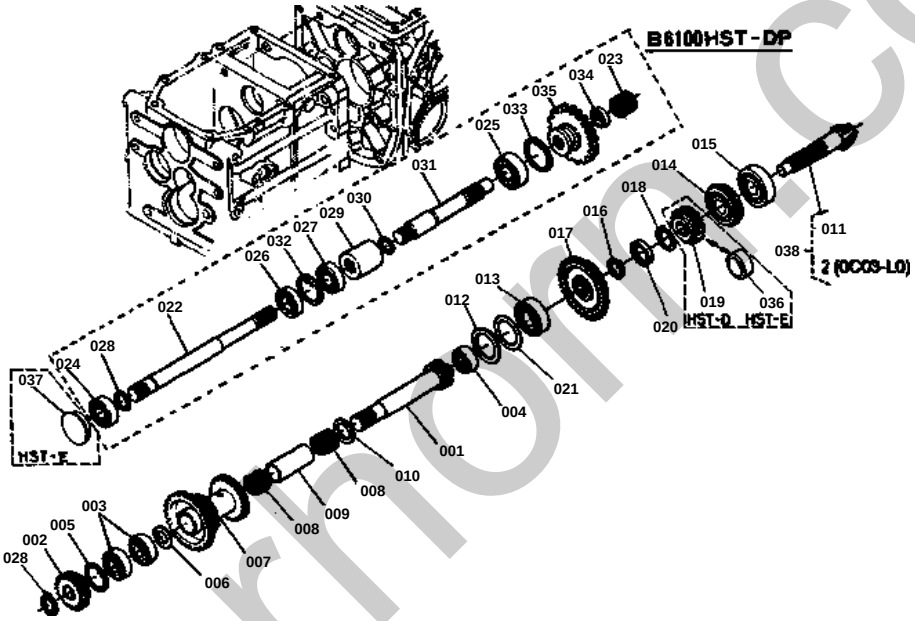

silverhorn.co.uk

2nd SHAFT FRONT WHEEL SHAFT

↔ Interchangeable; ≠ not interchangeable; ← new for old; → old for new

REF.No	Part No.	Description	Q'ty	S.No.	I/C	REMARKS	Weight (kgf)	Weight (lb)
001	66204-14210	SHAFT 2	1				0	0
002	66104-14220	GEAR SPUR 13	1				0.1	0.22
003	08101-06204	BEARING BALL	2				0.102	0.2244
004	08101-06302	BEARING BALL	1				0.084	0.1848
005	04611-00470	CIR-CLIP INTERNAL	1				0.006	0.0132
006	62231-14770	COLLAR	1				0	0
007	66204-14230	GEAR SPUR 30-14-18	1				0	0
008	66204-14240	BEARING NEEDLE	2				0.02	0.044
009	66204-14250	COLLAR	1				0.08	0.176
010	66204-14260	COLLAR	1				0.007	0.0154
011	99999-99999	BLANK	1			ORDER BY REF.NO.038	0	0
012	66591-14720	SPACER	1				0.002	0.0044
013	08211-07204	BEARING BALL	1				0.105	0.231
014	67211-14620	BEARING BALL	1				0.23	0.506
015	37230-26740	BEARING BALL	1				0	0
016	04612-00250	CIR-CLIP EXTERNAL	1				0.002	0.0044
017	66204-14630	GEAR SPUR 20-12	1				0.31	0.682
018	66611-14640	COLLAR STOP	2				0.003	0.0066
019	66611-14650	GEAR SPUR 16	1				0.104	0.2288
020	66611-14660	COLLAR	1				0.018	0.0396
021	66611-14670	SHIM 1	1				0.008	0.0176
021	66611-14680	SHIM 2	1				0.01	0.022
021	66611-14690	SHIM 3	1				0.001	0.0022
022	66204-14810	SHAFT 1	1				0.67	1.474
023	66611-14820	BEARING NEEDLE	1				0	0
024	08141-06004	BEARING BALL	1				0.064	0.1408
025	08101-06204	BEARING BALL	1				0.102	0.2244
026	09500-20428	SEAL OIL	1				0.012	0.0264
027	08101-06004	BEARING BALL	1				0.065	0.143
028	04612-00200	CIR-CLIP EXTERNAL	2				0.001	0.0022
029	66204-14820	JOINT	1				0.12	0.264
030	04611-00180	CIR-CLIP INTERNAL	1				0.001	0.0022
031	66204-14830	SHAFT 2	1				0.46	1.012
032	04611-00420	CIR-CLIP INTERNAL	1				0.006	0.0132
033	04611-00470	CIR-CLIP INTERNAL	1				0.006	0.0132
034	66611-14830	COLLAR	1				0.016	0.0352
035	66611-14840	GEAR SPUR 24	1				0.26	0.572
036	66681-14650	COLLAR	1				0.055	0.121
038	66204-82710	ASSY BEVEL GEAR 6-37	1				2.1	4.62

silvernorn.co.uk

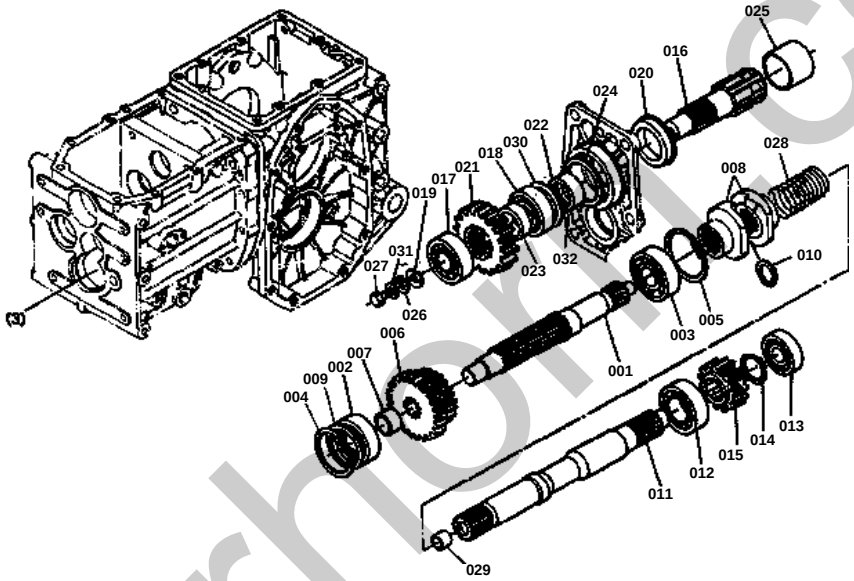

silverhorn.co.uk

3rd 5th PTO SHAFT

↔ Interchangeable; ≠ not interchangeable; ← new for old; → old for new

REF.No	Part No.	Description	Q'ty	S.No.	I/C	REMARKS	Weight (kgf)	Weight (lb)
001	66204-14310	SHAFT 3	1				0.7	1.54
002	08101-06303	BEARING BALL	1				0.112	0.2464
003	08101-06205	BEARING BALL	1				0.14	0.308
004	04611-00470	CIR-CLIP INTERNAL	1				0.006	0.0132
005	04611-00520	CIR-CLIP INTERNAL	1				0.009	0.0198
006	66204-14320	GEAR 21-17	1				0	0
007	66204-14330	COLLAR	1				0.03	0.066
008	66706-14380	CAM	2				0.198	0.4356
009	62131-14170	SHIM	1				0.002	0.0044
010	04612-00220	CIR-CLIP EXTERNAL	1				0.001	0.0022
011	66706-14510	SHAFT 5	1				0	0
012	08101-06205	BEARING BALL	1				0.14	0.308
013	08101-06303	BEARING BALL	1				0.112	0.2464
014	04612-00250	CIR-CLIP EXTERNAL	1				0.002	0.0044
015	66204-14510	GEAR SPUR 14	1				0.135	0.297
016	66204-14710	SHAFT PTO	1				0	0
017	08711-30204	BEARING	1				0.116	0.2552
018	08711-30205	BEARING	1				0.148	0.3256
019	66704-14720	WASHER	1				0.009	0.0198
020	09180-35488	SEAL OIL	1				0.019	0.0418
021	66204-14790	GEAR SPUR 21	1				0.465	1.023
022	66611-14730	BUSH	1				0.042	0.0924
023	66706-14740	COLLAR	1				0.03	0.066
024	66611-14750	SHIM 1	1				0.002	0.0044
024	66611-14760	SHIM 2	1				0.002	0.0044
024	66611-14770	SHIM 3	1				0.001	0.0022
025	66706-14810	VINYL COVER PTO	1				0.024	0.0528
026	63753-32430	WASHER	1				0.001	0.0022
027	66704-14730	BOLT	1				0.012	0.0264
028	66706-14390	SPRING	1				0.045	0.099
029	66706-14520	BUSH	1				0.004	0.0088
030	66706-14782	COLLAR	1				0.006	0.0132
031	04012-50080	WASHER PLAIN	1				0.001	0.0022
032	66611-14740	COLLAR	1				0.004	0.0088

silvernorn.co.uk

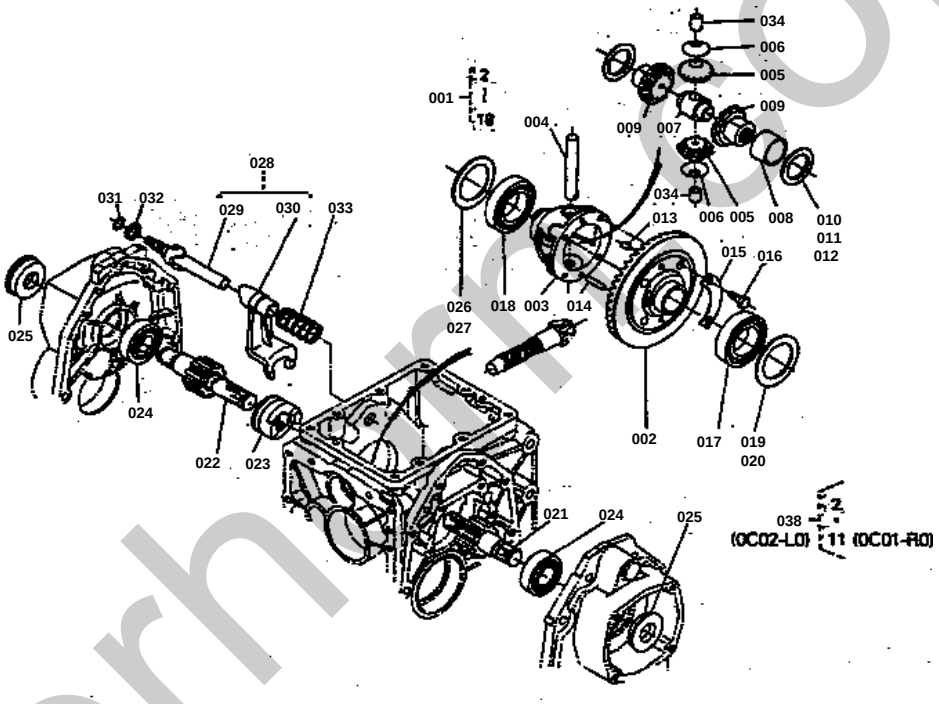

silverhill.co.uk

DIFFERENTIAL

↔ Interchangeable; ≠ not interchangeable; ← new for old; → old for new

REF.No	Part No.	Description	Q'ty	S.No.	I/C	REMARKS	Weight (kgf)	Weight (lb)
001	67211-14903	ASSY DIFFERENTIAL	1			REF.NO.002 TO 018	0	0
002	99999-99999	BLANK	1				0	0
003	67211-14974	CASE DIFFERENTIAL	1				0.72	1.584
004	67211-14913	SHAFT DIFF PINION	1				0.12	0.264
005	67211-14925	PINION DIFFERENTIAL	2				0.114	0.2508
006	67211-14983	COLLAR PINION THRUST	2				0.01	0.022
007	66591-14860	COLLAR DIFF THRUST	1				0.102	0.2244
008	66611-14950	BUSH	1				0.032	0.0704
009	67211-15150	GEAR DIFF SIDE	2				0.158	0.3476
010	67211-15160	SHIM 1	1				0.01	0.022
011	67211-15170	SHIM 2	1				0.008	0.0176
012	67211-15180	SHIM 3	1				0.01	0.022
013	66591-14790	PIN KNOCK	1				0.004	0.0088
014	66591-14783	PIN STRAIGHT	1				0.01	0.022
015	67211-15190	PLATE LOCK	2				0.008	0.0176
016	01156-50820	BOLT	6				0.01	0.022
017	08101-06009	BEARING BALL	1				0.22	0.484
018	08101-06010	BEARING BALL	1				0.262	0.5764
019	66591-14980	SHIM DIFF SIDE 3	1				0.005	0.011
020	66591-14990	SHIM DIFF SIDE 4	1				0.002	0.0044
021	66611-15110	SHAFT DIFF GEAR LH	1				0.58	1.276
022	66611-15120	SHAFT DIFF GEAR RH	1				0.68	1.496
023	66611-15130	CLUTCH DIFF LOCK	1				0.2	0.44
024	08101-06305	BEARING BALL	2				0.23	0.506
025	66611-14940	SEAL OIL	2				0.02	0.044
026	66611-15140	SHIM DIFF SIDE 5	1				0.006	0.0132
027	66611-15150	SHIM DIFF SIDE 6	1				0.002	0.0044
028	66611-19100	ASSY CAM FORK	1			REF.NO.029 030	0.42	0.924
029	66591-18280	ASSY ROD FORK	1				0.16	0.352
030	66611-19110	FORK DIFF LOCK	1				0.24	0.528
031	04811-10120	O RING	1				0.001	0.0022
032	66591-18340	SHIM	2				0.001	0.0022
033	66591-18320	SPRING	1				0.02	0.044
034	67211-14930	BUSH	2				0.01	0.022
038	66204-82710	ASSY BEVEL GEAR 6-37	1				2.1	4.62

silverhorn.co.uk

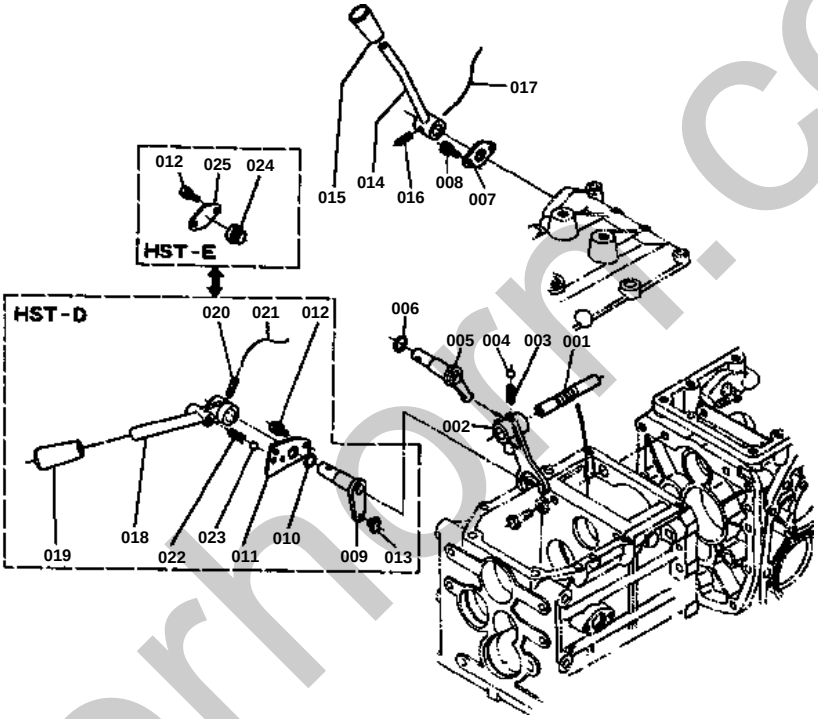

silvermorn.co.uk

AUX. SPEED CHANGE

↔ Interchangeable; ≠ not interchangeable; ← new for old; → old for new

REF.No	Part No.	Description	Q'ty	S.No.	I/C	REMARKS	Weight (kgf)	Weight (lb)
001	66204-18410	SHAFT FORK	1				0.095	0.209
002	66204-18420	FORK SHIFT	1				0.165	0.363
003	62061-18260	SPRING	1				0.002	0.0044
004	07715-01605	BALL	1				0.003	0.0066
005	66591-18170	ARM AUX SPEED-CHANGE	1				0.106	0.2332
006	04811-00160	O RING	1				0.001	0.0022
007	66591-18180	HOLDER FORK ROD 1	1				0.012	0.0264
008	01202-50614	BOLT	2				0.006	0.0132
009	66611-19210	LEVER FORK	1				0.12	0.264
010	04811-00160	O RING	1				0.001	0.0022
011	66204-19220	HOLDER FORK ROD 2	1				0.03	0.066
012	01202-50614	BOLT	2				0.006	0.0132
013	66611-19230	SHFTER	1				0.012	0.0264
014	66204-42510	LEVER RANGE SHIFT	1				0.2	0.44
015	54201-23270	GRIP LEVER	1				0.02	0.044
016	05411-00622	PIN SPRING	1				0.003	0.0066
017	99999-99999	BLANK	0			OBTAINED LOCALLY	0	0
018	66204-42610	LEVER FRONT DRIVE	1				0.16	0.352
019	54201-23270	GRIP LEVER	1				0.02	0.044
020	05411-00622	PIN SPRING	1				0.003	0.0066
021	99999-99999	BLANK	0			OBTAINED LOCALLY	0	0
022	62061-18260	SPRING	1				0.002	0.0044
023	07715-01605	BALL	1				0.003	0.0066

silverhorn.co.uk

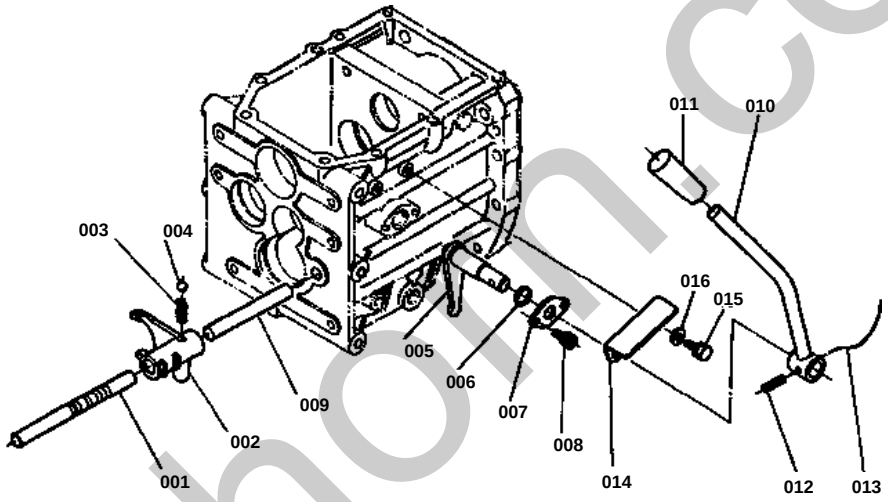

silverhorn.co.uk

ROTARY SPEED CHANGE

↔ Interchangeable; ≠ not interchangeable; ← new for old; → old for new

REF.No	Part No.	Description	Q'ty	S.No.	I/C	REMARKS	Weight (kgf)	Weight (lb)
001	66204-18610	FORK SHIFT	1				0.21	0.462
002	66591-18210	FORK SHIFT	1				0.2	0.44
003	62061-18260	SPRING	1				0.002	0.0044
004	07715-01605	BALL	1				0.003	0.0066
005	66591-18220	ARM	1				0.12	0.264
006	04811-00160	O RING	1				0.001	0.0022
007	66591-18180	HOLDER FORK ROD 1	1				0.012	0.0264
008	01202-50614	BOLT	2				0.006	0.0132
009	66611-19310	ROD	1				0.129	0.2838
010	66611-42710	LEVER	1				0.237	0.5214
011	54201-23270	GRIP LEVER	1				0.02	0.044
012	05411-00622	PIN SPRING	1				0.003	0.0066
013	99999-99999	BLANK	0			OBTAINED LOCALLY	0	0
014	66204-42170	GUIDE CHANGE LEVER	1				0.04	0.088
015	01202-50814	BOLT	2				0.011	0.0242
016	04013-50080	WASHER PLAIN	2				0	0

silverhorn.co.uk

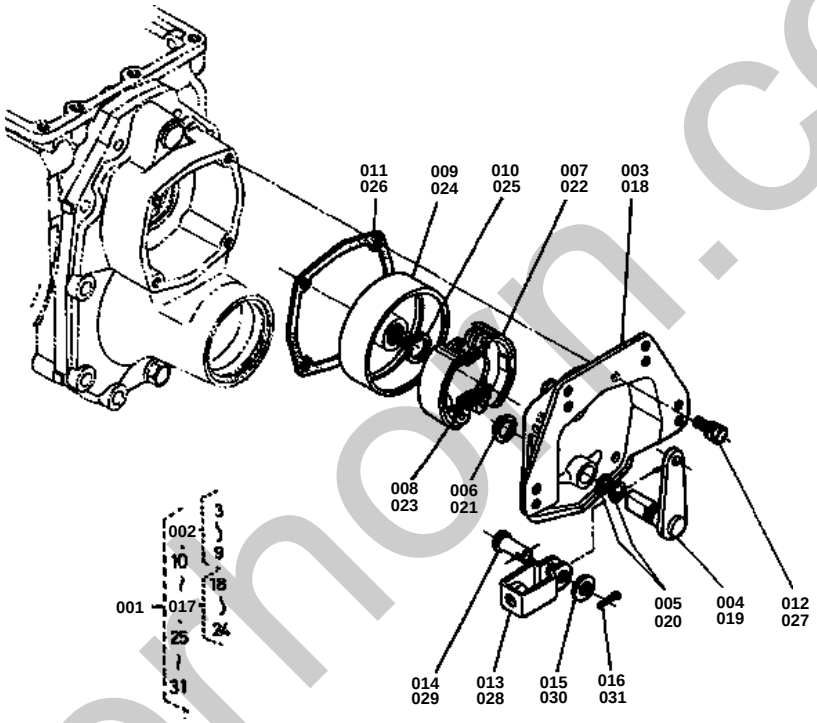

silvernoon.co.uk

BRAKE

↔ Interchangeable; ≠ not interchangeable; ← new for old; → old for new

REF.No	Part No.	Description	Q'ty	S.No.	I/C	REMARKS	Weight (kgf)	Weight (lb)
001	66611-22102	ASSY BRAKE	1			REF.NO.002 010 TO 017 AND 025 TO 031	5.14	11.308
002	66611-22303	ASSY BRAKE LH	1			REF.NO.003 TO 009	0	0
003	66611-22312	COVER BRAKE LH	1				1.04	2.288
004	66591-22330	CAM BRAKE LH	1				0.204	0.4488
005	04811-05170	O RING	2				0.001	0.0022
006	04612-00200	CIR-CLIP EXTERNAL	1				0.001	0.0022
007	66611-88800	SHOE BRAKE	2				0	0
008	66591-22350	SPRING RETURN	2				0.003	0.0066
009	66611-22360	DRUM BRAKE	1				0	0
010	04612-00220	CIR-CLIP EXTERNAL	1				0.001	0.0022
011	66591-22410	GASKET	1				0	0
012	01120-50822	BOLT	4				0	0
013	63753-42350	METAL MAIN CLUTCH	1				0.038	0.0836
014	05122-50820	PIN JOINT	1				0.009	0.0198
015	04012-50080	WASHER PLAIN	1				0.001	0.0022
016	05511-50215	PIN SPLIT	1				0.001	0.0022
017	66611-22403	ASSY BRAKE RH	1			REF.NO.018 TO 024	0	0
018	66611-22412	COVER BRAKE RH	1				1.05	2.31
019	66591-22370	CAM BRAKE RH	1				0.204	0.4488
020	04811-05170	O RING	2				0.001	0.0022
021	04612-00200	CIR-CLIP EXTERNAL	1				0.001	0.0022
022	66611-88800	SHOE BRAKE	2				0	0
023	66591-22350	SPRING RETURN	2				0.003	0.0066
024	66611-22360	DRUM BRAKE	1				0	0
025	04612-00220	CIR-CLIP EXTERNAL	1				0.001	0.0022
026	66591-22410	GASKET BRAKE	1				0	0
027	01120-50822	BOLT	4				0	0
028	63753-42350	METAL MAIN CLUTCH	1				0.038	0.0836
029	05122-50820	PIN JOINT	1				0.009	0.0198
030	04012-50080	WASHER PLAIN	1				0.001	0.0022
031	05511-50215	PIN SPLIT	1				0.001	0.0022

silvermorn.co.uk

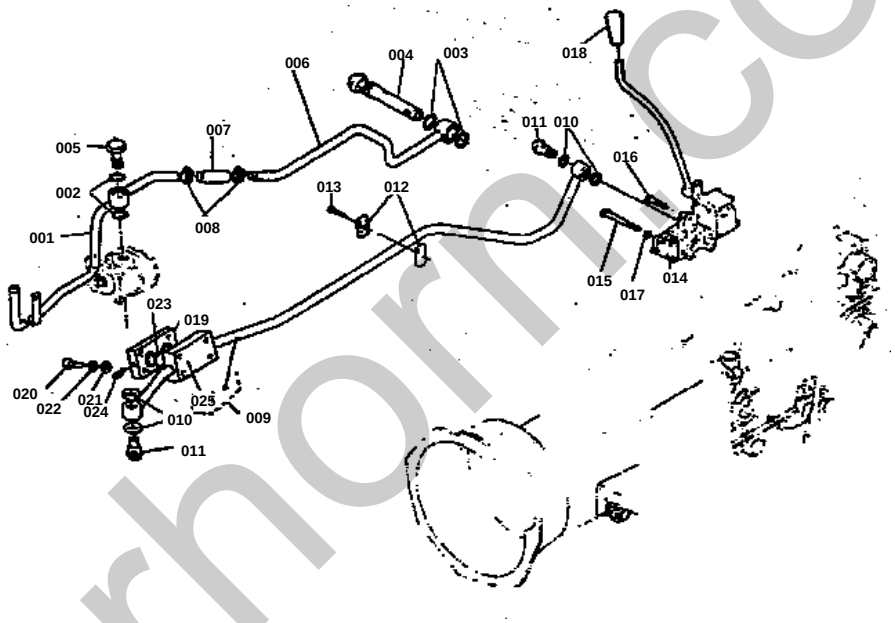

silverhorn.co.uk

HYDRAULIC PIPE

↔ Interchangeable; ≠ not interchangeable; ← new for old; → old for new

REF.No	Part No.	Description	Q'ty	S.No.	I/C	REMARKS	Weight (kgf)	Weight (lb)
001	66204-36110	PIPE 2 SUCTION	1				0.6	1.32
002	04811-00220	O RING	2				0.001	0.0022
003	04811-10300	O RING	2				0.001	0.0022
004	66611-36120	STRAINER	1				0.2	0.44
005	32170-38170	BOLT EYE JOINT	1				0.09	0.198
006	66204-36710	PIPE 1 SUCTION	1				0.6	1.32
007	66204-36720	HOSE 27 X 19	1				0.04	0.088
008	66204-36230	BAND	2				0.02	0.044
009	66204-36130	PIPE SUCTION	1			REF.NO.025	1.2	2.64
010	67111-37180	GASKET	4				0.003	0.0066
011	54203-36150	JOINT PIPE	2				0.079	0.1738
012	66204-36120	CLAMP PIPE	2				0.01	0.022
013	03016-50640	SCREW	1				0.008	0.0176
014	66711-36200	ASSY VALVE CONTROL	1				0	0
015	01150-50875	BOLT	2				0	0
016	01120-50845	BOLT	1				0	0
017	04512-50080	WASHER SPRING	2				0	0
018	54201-23270	GRIP LEVER	1				0.02	0.044
019	66604-36160	COVER HYD. BLOCK	1				0.23	0.506
020	01150-50838	BOLT	4				0.017	0.0374
021	04013-50080	WASHER PLAIN	4				0	0
022	04512-50080	WASHER SPRING	4				0	0
023	04811-00200	O RING	2				0.001	0.0022
024	06312-10020	PLUG	1				0.015	0.033
025	99999-99999	BLANK	0			ORDER BY REF.NO.009	0	0

silverhorn.co.uk

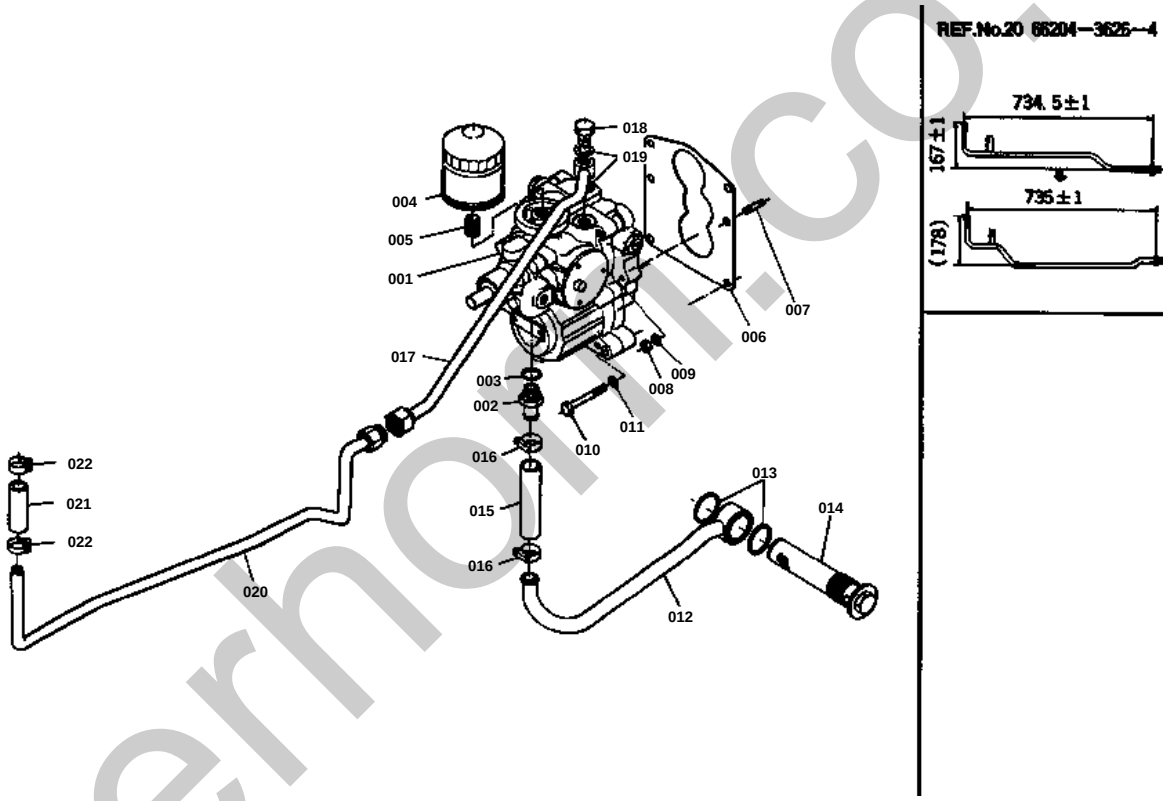

silverhorn.co.uk

↔ Interchangeable; ≠ not interchangeable; ← new for old; → old for new

REF.No	Part No.	Description	Q'ty	S.No.	I/C	REMARKS	Weight (kgf)	Weight (lb)
001	66204-36142	ASSY HST	1				0	0
002	66204-36150	JOINT	1				0.07	0.154
003	04811-00180	O RING	1				0.001	0.0022
004	66204-36160	CARTRIDGE OIL FILTER	1				0	0
005	66204-36170	JOINT	1				0.018	0.0396
006	66204-36180	GASKET	1				0	0
007	01555-51035	STUD	4				0.029	0.0638
008	02118-50100	NUT	4				0.005	0.011
009	04512-50100	WASHER SPRING	4				0	0
010	01153-51075	BOLT	2				0.045	0.099
011	04512-50100	WASHER SPRING	2				0	0
012	66204-36190	PIPE SUCTION (HST)	1				0.3	0.66
013	04811-06400	O RING	2				0.001	0.0022
014	66204-36210	STRAINER	1				0.367	0.8074
015	66204-36220	HOSE 31 X 19	1				0.07	0.154
016	66204-36230	BAND 27	2				0.02	0.044
017	66204-36240	PIPE 1	1				0.35	0.77
018	54203-36150	JOINT PIPE	1				0.079	0.1738
019	67111-37180	GASKET	2				0.003	0.0066
020	66204-36260	PIPE 2	1	<=10512			0.6	1.32
020	66204-36264	PIPE 2	1	>=10001			0	0
021	66204-36270	HOSE 27 X 15	2				0.038	0.0836
022	66204-36280	BAND 23	4				0.02	0.044

silverhorn.co.uk

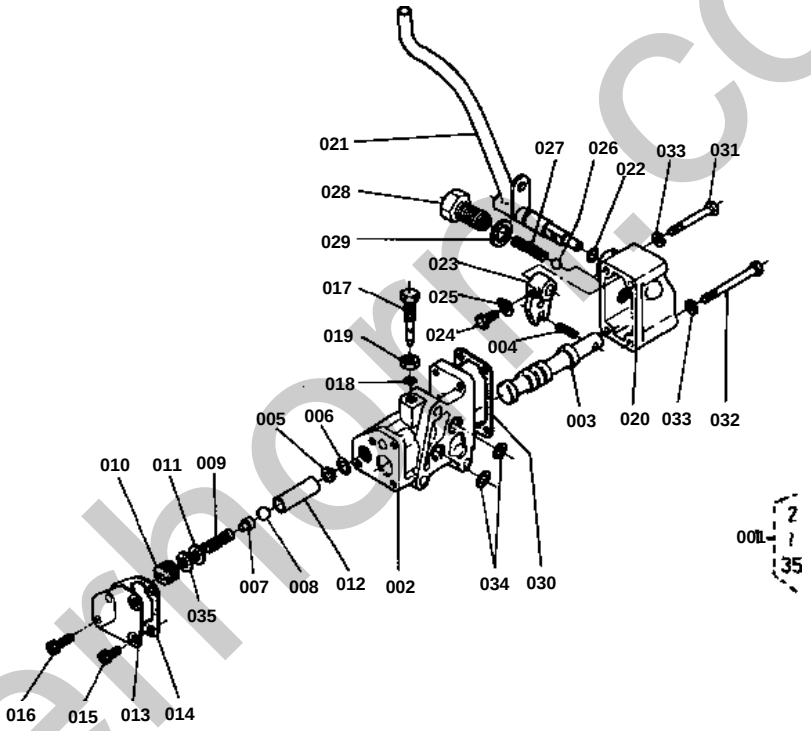

silverhorse.co.uk

CONTROL VALVE

↔ Interchangeable; ≠ not interchangeable; ← new for old; → old for new

REF.No	Part No.	Description	Q'ty	S.No.	I/C	REMARKS	Weight (kgf)	Weight (lb)
001	66711-36200	ASSY VALVE CONTROL	1			REF.NO.002 TO 035	0	0
002	99999-99999	BLANK	0			ORDER BY REF.NO.001	0	0
003	66611-36290	SPOOL	1				0.172	0.3784
004	05411-00620	PIN SPRING	1				0.002	0.0044
005	66591-36330	HOLDER	1				0.008	0.0176
006	04811-15120	O RING	1				0.001	0.0022
007	66611-36222	HOLDER SPRING	1				0.008	0.0176
008	07715-03211	BALL	1				0.003	0.0066
009	66591-36350	SPRING	1				0.01	0.022
010	66591-36360	SCREW ADJUSTING	1				0.012	0.0264
011	04012-50060	WASHER PLAIN	1				0.001	0.0022
012	66591-36370	COLLAR	1				0.016	0.0352
013	66611-36260	COVER RELIEF	1				0.03	0.066
014	66591-36390	GASKET	1				0	0
015	01202-50618	BOLT	2				0.006	0.0132
016	01202-50622	BOLT	2				0.007	0.0154
017	66591-36413	BOLT ADJUSTING	1				0.028	0.0616
018	04811-10040	O RING	1				0.001	0.0022
019	02112-50100	NUT	1				0.004	0.0088
020	66591-36430	COVER VALVE	1				0.18	0.396
021	66711-36250	LEVER CONTROL	1				0.392	0.8624
022	04811-00100	O RING	1				0.001	0.0022
023	66591-36450	ARM VALVE GUIDE	1				0.05	0.11
024	66591-36480	BOLT	1				0.004	0.0088
025	04111-50060	WASHER TONGUED	1				0.001	0.0022
026	07715-00803	BALL	1				0.004	0.0088
027	62061-18270	SPRING BALL STOPPER	1				0.003	0.0066
028	66591-36460	BOLT	1				0.054	0.1188
029	04714-00300	GASKET	1				0.002	0.0044
030	66591-36470	GASKET VALVE COVER	1				0	0
031	01050-50650	BOLT	2				0.012	0.0264
032	01050-50665	BOLT	2				0.014	0.0308
033	04512-50060	WASHER SPRING	4				0	0
034	04811-00120	O RING	2				0.001	0.0022
035	66611-36330	SHIM	1				0.001	0.0022

silverhorn.co.uk

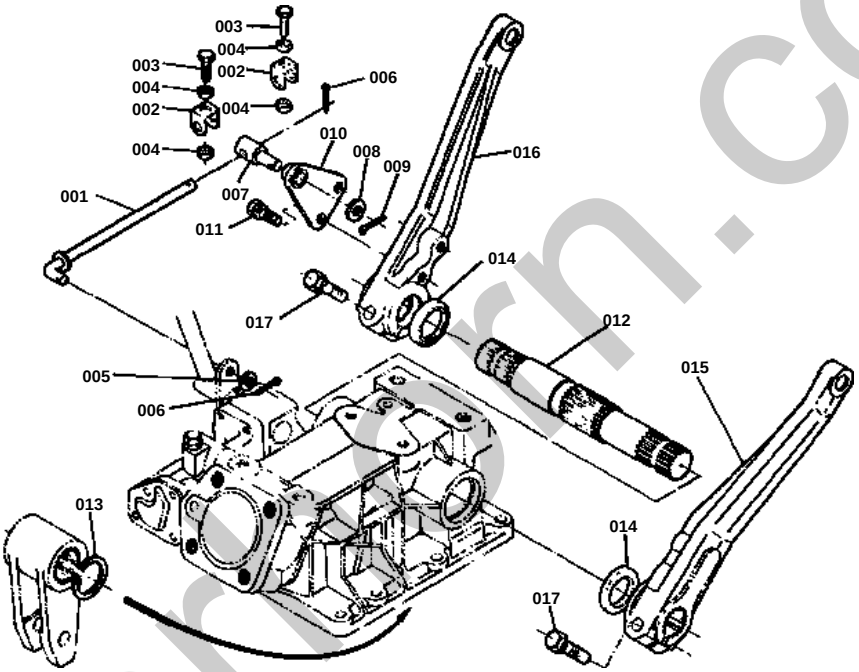

silverhorn.co.uk

↔ Interchangeable; ≠ not interchangeable; ← new for old; → old for new

REF.No	Part No.	Description	Q'ty	S.No.	I/C	REMARKS	Weight (kgf)	Weight (lb)
001	66704-36310	ROD CHECK	1				0.075	0.165
002	66611-36320	INTERLOCKER	2				0.022	0.0484
003	01153-50822	BOLT	2				0.011	0.0242
004	02112-50080	NUT	4				0.003	0.0066
005	04012-50080	WASHER PLAIN	1				0.001	0.0022
006	05511-50215	PIN SPLIT	2				0.001	0.0022
007	66591-36540	SHAFT	1				0.034	0.0748
008	04011-50100	WASHER PLAIN	1				0.002	0.0044
009	05511-50318	PIN SPLIT	1				0.001	0.0022
010	66591-36550	HOLDER	1				0.072	0.1584
011	01120-50822	BOLT	2				0	0
012	66591-36690	SHAFT HYDRAULIC ARM	1				0	0
013	04612-00320	CIR-CLIP EXTERNAL	1				0.004	0.0088
014	09230-28405	SEAL OIL	2				0.006	0.0132
015	66611-36510	ARM LIFT LH	1				0	0
016	66611-36520	ARM LIFT RH	1				0	0
017	01123-51045	BOLT	2				0.032	0.0704

silverhorn.co.uk

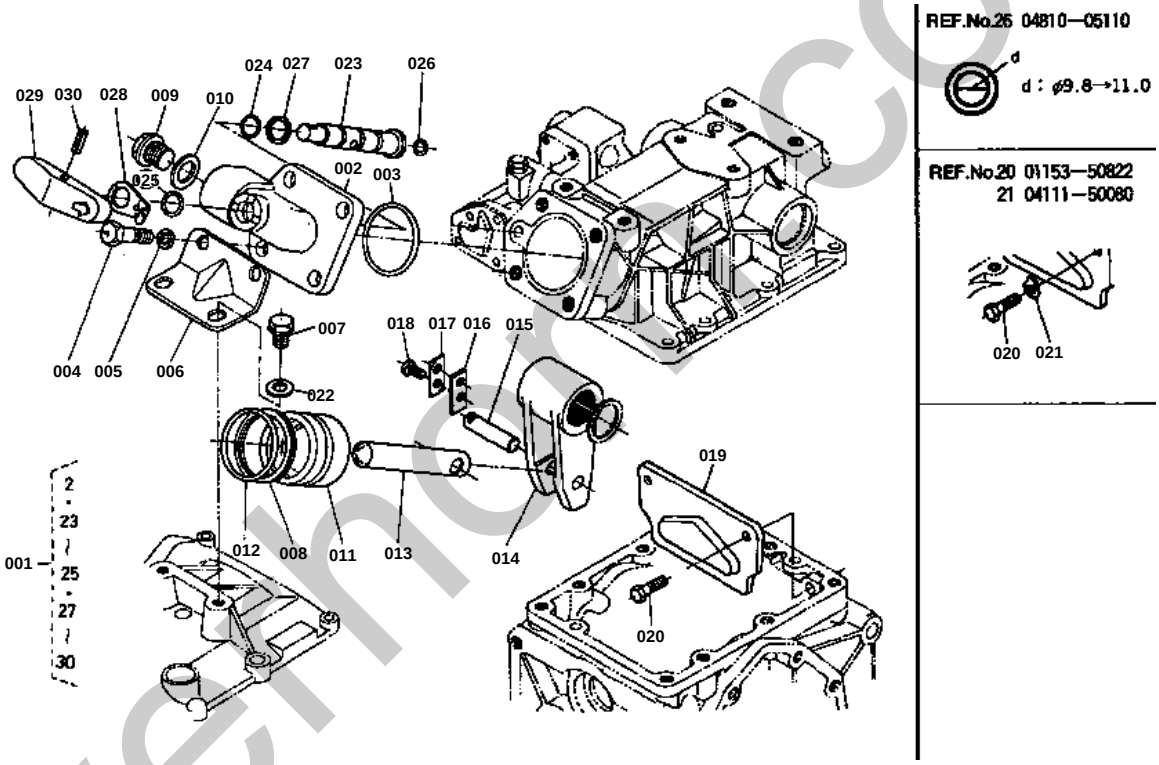

silvermacco.uk

↔ Interchangeable; ≠ not interchangeable; ← new for old; → old for new

REF.No	Part No.	Description	Q'ty	S.No.	I/C	REMARKS	Weight (kgf)	Weight (lb)
001	66404-36600	ASSY CAP CYLINDER	1			REF.NO.002 023 TO 025 AND 027 TO 030	1.17	2.574
002	96319-01410	CAP CYLINDER	1				1.02	2.244
003	04811-50550	O RING	1				0.002	0.0044
004	66711-36440	BOLT	2				0.045	0.099
005	04512-50120	WASHER SPRING	2				0	0
006	66611-36413	STAY	1				0.14	0.308
007	01120-51025	BOLT	2				0	0
008	67211-36420	RING	1				0.003	0.0066
009	06311-25040	PLUG	1				0.09	0.198
010	66611-36420	GASKET	1				0.006	0.0132
011	67211-36410	PISTON HYDRAULIC	1				0.55	1.21
012	04810-08500	O RING	1				0.005	0.011
013	66591-36640	ROD HYDRAULIC PISTON	1				0.31	0.682
014	66591-36650	ARM OIL PRESSURE	1				0.8	1.76
015	66591-36660	PIN ARM	1				0.045	0.099
016	66591-36670	PLATE LOCK	1				0.01	0.022
017	66591-36680	WASHER LOCK	1				0.002	0.0044
018	01050-50612	BOLT	2				0.005	0.011
019	66621-36750	PLATE HYDRAULIC ARM	1				0.34	0.748
020	01153-50822	BOLT	2	<=10430			0.011	0.0242
020	67211-36610	BOLT	2	>=10001			0.015	0.033
021	04111-50080	WASHER TONGUED	2	<=10430			0.001	0.0022
022	04013-50100	WASHER PLAIN	2				0	0
023	96319-01422	SPOOL SUB	1				0.07	0.154
024	04811-00120	O RING	1				0.001	0.0022
025	04811-00160	O RING	1				0.001	0.0022
026	04811-00100	O RING	1				0.001	0.0022
026	04810-05110	O RING	1	>=10001			0.001	0.0022
027	96319-01430	WASHER	1				0.002	0.0044
028	96319-01440	SPRING	1				0.002	0.0044
029	96319-01450	GRIP	1				0.04	0.088
030	05411-00520	PIN SPRING	1				0.002	0.0044

silverhorn.co.uk

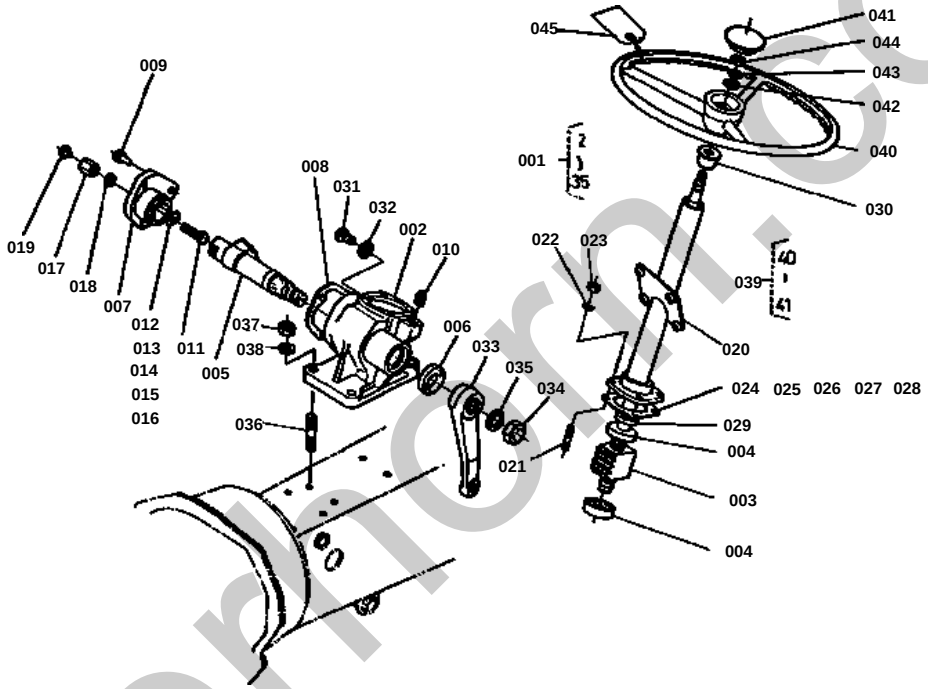

silverhorn.co.uk

STEERING

↔ Interchangeable; ≠ not interchangeable; ← new for old; → old for new

REF.No	Part No.	Description	Q'ty	S.No.	I/C	REMARKS	Weight (kgf)	Weight (lb)
001	66204-41102	ASSY STEERING	1			REF.NO.002 TO 035	6.8	14.96
002	66204-41110	CASE STEERING GEAR	1				0	0
003	66811-41200	ASSY NUT BALL	1				1.11	2.442
004	66811-41140	BEARING THRUST BALL	2				0.045	0.099
005	66811-41150	SHAFT SECTOR	1				0.52	1.144
006	09500-22358	SEAL OIL	1				0.01	0.022
007	66811-41160	COVER SIDE	1				0.3	0.66
008	66811-41170	GASKET	1				0	0
009	01120-50822	BOLT	3				0	0
010	34150-16640	PLUG	1				0.015	0.033
011	66811-41180	SCREW ADJUSTING	1				0.013	0.0286
012	66811-41190	COLLAR ADJUSTING 1	1				0.002	0.0044
013	66811-41210	COLLAR ADJUSTING 2	1				0.001	0.0022
014	66811-41220	COLLAR ADJUSTING 3	1				0.001	0.0022
015	66811-41230	COLLAR ADJUSTING 4	1				0.001	0.0022
016	66811-41240	COLLAR ADJUSTING 5	1				0.001	0.0022
017	66811-41250	NUT	1				0.027	0.0594
018	04714-00080	GASKET	1				0.001	0.0022
019	61011-18140	PLUG	1				0.002	0.0044
020	66204-41122	POST STEERING	1				0.5	1.1
021	01513-50822	STUD	4				0.01	0.022
022	04512-50080	WASHER SPRING	4				0	0
023	02114-50080	NUT	4				0.005	0.011
024	66811-41320	SHIM 1	1				0.001	0.0022
025	66811-41330	SHIM 2	1				0	0
026	66811-41340	SHIM 3	1				0.001	0.0022
027	66811-41350	SHIM 4	1				0.001	0.0022
028	66811-41360	SHIM 5	1				0.003	0.0066
029	09500-16287	SEAL OIL	1				0.01	0.022
030	66591-41250	BUSH POST	1				0.016	0.0352
031	06331-35010	PLUG	1				0.012	0.0264
032	04717-01000	WASHER SEAL	1				0.001	0.0022
033	66204-41410	ARM PITMAN	1				0.4	0.88
034	02172-50160	NUT	1				0.017	0.0374
035	04512-50160	WASHER SPRING	1				0	0
036	01517-51028	STUD	4				0.022	0.0484
037	02118-50100	NUT	4				0.005	0.011
038	04512-50100	WASHER SPRING	4				0	0
039	66611-41400	ASSY WHEEL STEERING	1			REF.NO.040 041	0	0
040	99999-99999	BLANK	0			ORDER BY REF.NO.039	0	0
041	66611-41420	CAP STEERING WHEEL	1				0.026	0.0572
042	04013-50120	WASHER PLAIN	1				0	0
043	04512-50120	WASHER SPRING	1				0	0
044	02172-50120	NUT	1				0.01	0.022
045	35217-18370	CARD INSTRUCTION	1				0.001	0.0022

silvermorn.co.uk

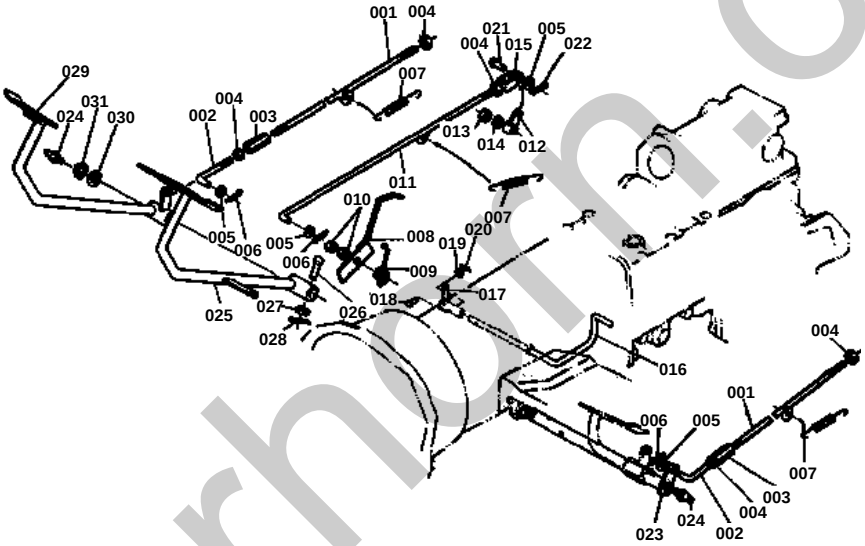

silverhorn.co.uk

BRAKE ROD

↔ Interchangeable; ≠ not interchangeable; ← new for old; → old for new

REF.No	Part No.	Description	Q'ty	S.No.	I/C	REMARKS	Weight (kgf)	Weight (lb)
001	66204-42810	ROD BRAKE	2				0	0
002	66621-43250	ROD BRAKE FRONT	2				0.024	0.0528
003	66591-42410	TURNBUCKLE	2				0.046	0.1012
004	02112-50080	NUT	5				0.003	0.0066
005	04012-50080	WASHER PLAIN	4				0.001	0.0022
006	05511-50318	PIN SPLIT	4				0.001	0.0022
007	66591-43190	SPRING	3				0.044	0.0968
008	66204-42850	LEVER BRAKE LOCK	1				0.12	0.264
009	66204-42840	SPRING	1				0.006	0.0132
010	02172-50120	NUT	2				0.01	0.022
011	66204-42860	ROD DIFF LOCK	1				0.29	0.638
012	66591-43170	LEVER DIFF LOCK	1				0.041	0.0902
013	02118-50100	NUT	1				0.005	0.011
014	04512-50100	WASHER SPRING	1				0	0
015	63753-42350	METAL MAIN CLUTCH	1				0.038	0.0836
016	66204-42870	SHAFT DIFF LOCK	1				0.715	1.573
017	66204-42880	LEVER DIFF LOCK	1				0.12	0.264
018	66611-14120	PIN JOINT	1				0	0
019	04012-50050	WASHER PLAIN	1				0.001	0.0022
020	05511-50215	PIN SPLIT	1				0.001	0.0022
021	05122-50820	PIN JOINT	1				0.009	0.0198
022	05511-50215	PIN SPLIT	1				0.001	0.0022
023	66204-42910	SHAFT BRAKE PEDAL	1				1.6	3.52
024	06613-10010	NIPPLE GREASE	2				0.006	0.0132
025	66204-42920	PEDAL BRAKE LH	1				1.7	3.74
026	05112-50840	PIN JOINT	1				0.017	0.0374
027	04012-50080	WASHER PLAIN	1				0.001	0.0022
028	05511-50215	PIN SPLIT	1				0.001	0.0022
029	66204-42930	PEDAL BRAKE RH	1				1.63	3.586
030	66591-43233	COLLAR	1				0.004	0.0088
031	04612-00240	CIR-CLIP EXTERNAL	1				0.002	0.0044

silverhorn.co.uk

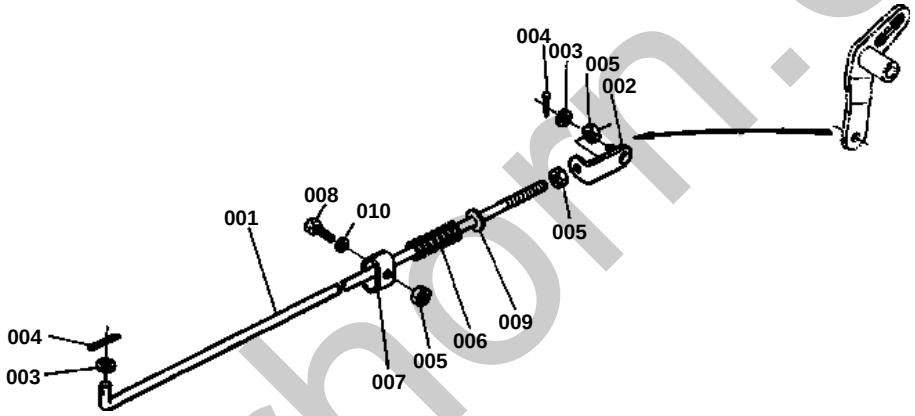

silverhorn.co.uk

RELEASE ROD

↔ Interchangeable; ≠ not interchangeable; ← new for old; → old for new

REF.No	Part No.	Description	Q'ty	S.No.	I/C	REMARKS	Weight (kgf)	Weight (lb)
001	66204-43210	ROD RELEASE	1				0.15	0.33
002	66711-43220	METAL	1				0.023	0.0506
003	04013-50060	WASHER PLAIN	2				0	0
004	05511-51612	PIN SPLIT	2				0.001	0.0022
005	02014-50060	NUT	3				0.003	0.0066
006	66204-43272	SPRING	1				0.014	0.0308
007	66204-54650	HOOK	2				0.007	0.0154
008	01050-50620	BOLT	1				0.006	0.0132
009	04015-50060	WASHER PLAIN	1				0	0
010	04512-50060	WASHER SPRING	1				0	0

silverhorn.co.uk

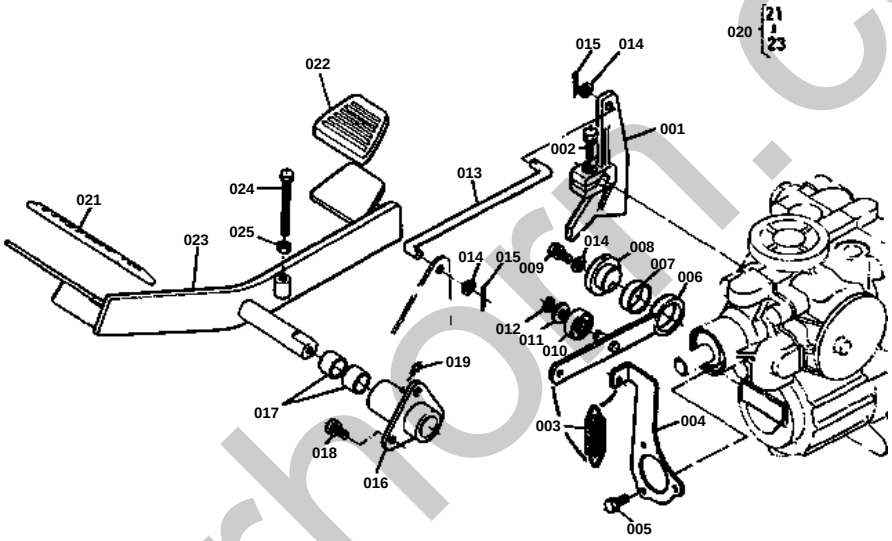

silverhorn.co.uk

SPEED CHANGE 1

↔ Interchangeable; ≠ not interchangeable; ← new for old; → old for new

REF.No	Part No.	Description	Q'ty	S.No.	I/C	REMARKS	Weight (kgf)	Weight (lb)
001	66204-43310	HOLDER NEUTRAL	1				0.28	0.616
002	01120-50828	BOLT	1				0	0
003	66204-43320	SPRING	1				0	0
004	66204-43330	HOLDER SPRING	1				0.095	0.209
005	01202-50614	BOLT	3				0.006	0.0132
006	66204-43343	ARM	1				0.13	0.286
007	66204-43572	BUSHING	1				0.003	0.0066
008	66204-43352	ADGUSTER NEUTRAL	1				0.072	0.1584
009	01123-50832	BOLT	1				0.016	0.0352
010	08121-06000	BEARING BALL	1				0.02	0.044
011	04011-50100	WASHER PLAIN	1				0.002	0.0044
012	04612-00100	CIR-CLIP EXTERNAL	1				0.001	0.0022
013	66204-43360	ROD SPEED CONTROL	1				0	0
014	04012-50080	WASHER PLAIN	3				0.001	0.0022
015	05511-50215	PIN SPLIT	2				0.001	0.0022
016	66204-43370	HOLDER PEDAL	1				0.25	0.55
017	66204-43550	BUSHING	2				0	0
018	01120-50818	BOLT	3				0	0
019	67211-42940	NIPPLE GREASE	1				0.001	0.0022
020	66204-43300	ASSY PEDAL SP-CONT.	1			REF.NO.021 TO 023	1.2	2.64
021	66204-43390	COVER FRONT PEDAL	1				0.06	0.132
022	66204-43410	COVER REAR PEDAL	1				0.06	0.132
023	66204-43380	PEDAL SPEED CONTROL	1				1.1	2.42
024	01155-50860	BOLT	1				0.025	0.055
025	02114-50080	NUT	1				0.005	0.011

silverhorn.co.uk

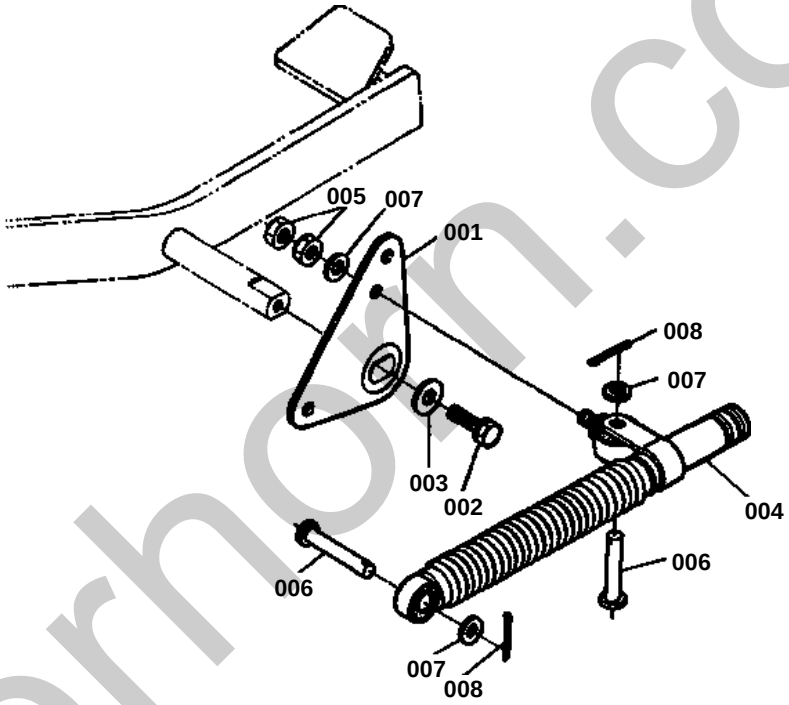

silverhorn.co.uk

SPEED CHANGE 2

↔ Interchangeable; ≠ not interchangeable; ← new for old; → old for new

REF.No	Part No.	Description	Q'ty	S.No.	I/C	REMARKS	Weight (kgf)	Weight (lb)
001	66204-43420	GUIDE ROD	1				0	0
002	01202-50816	BOLT	1				0.012	0.0264
002	01120-50816	BOLT	1	>=10001			0	0
003	04015-50080	WASHER PLAIN	1				0	0
004	66204-43530	DAMPER	1				0.3	0.66
005	02112-50080	NUT	2				0.003	0.0066
006	05122-50830	PIN JOINT	2				0.014	0.0308
007	04012-50080	WASHER PLAIN	3				0.001	0.0022
008	05511-50215	PIN SPLIT	2				0.001	0.0022

silverhorn.co.uk

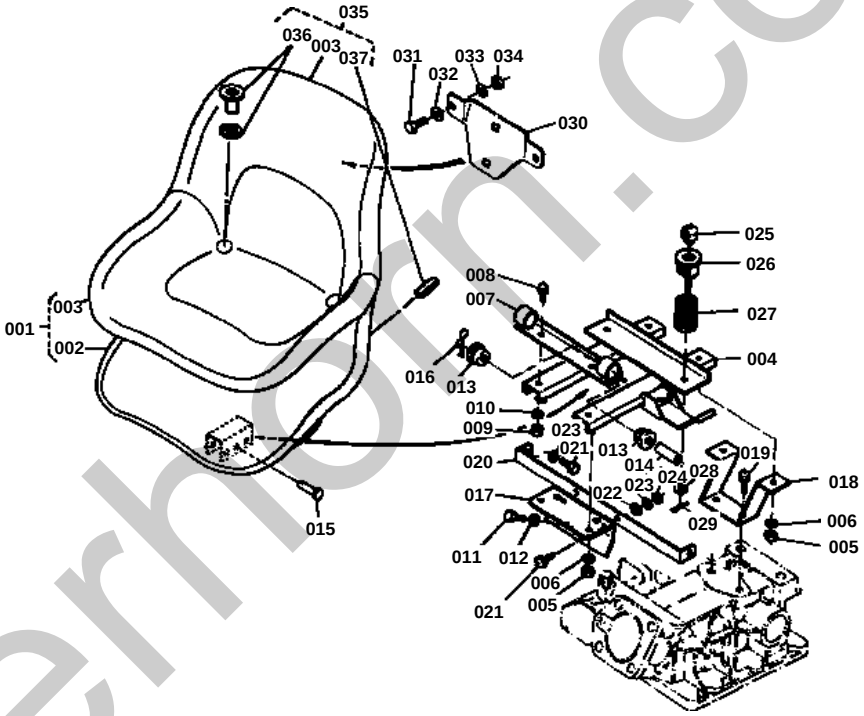

silverhorn.co.uk

↔ Interchangeable; ≠ not interchangeable; ← new for old; → old for new

REF.No	Part No.	Description	Q'ty	S.No.	I/C	REMARKS	Weight (kgf)	Weight (lb)
001	66711-45900	ASSY SEAT	1			REF.NO.002 003	4.8	10.56
002	99999-99999	BLANK	0			ORDER BY REF.NO.001	0	0
003	99999-99999	BLANK	0			ORDER BY REF.NO.001 OR 035	0	0
004	66204-45930	ADJUSTER SEAT	1				2.1	4.62
005	02118-50100	NUT	4				0.005	0.011
006	04512-50100	WASHER SPRING	4				0	0
007	66204-45940	SUPPORT SEAT FRONT	1				0.29	0.638
008	01150-50814	BOLT	2				0.01	0.022
009	02114-50080	NUT	2				0.005	0.011
010	04512-50080	WASHER SPRING	2				0	0
011	66711-36440	BOLT	2				0.045	0.099
012	04512-50120	WASHER SPRING	2				0	0
013	66591-41540	CUSHION	4				0.01	0.022
014	66591-41550	COLLAR	2				0.02	0.044
015	05122-51045	PIN JOINT	2				0	0
016	05516-51000	PIN SNAP	2				0	0
017	66204-45950	BRACKET FRONT	1				0	0
018	66204-45960	BRACKET REAR	1				0	0
019	01123-50825	BOLT	2				0.013	0.0286
020	66204-45990	STAY FENDER	1				0	0
021	01150-50820	BOLT	4				0.011	0.0242
022	04013-50080	WASHER PLAIN	4				0	0
023	04512-50080	WASHER SPRING	4				0	0
024	02114-50080	NUT	4				0.005	0.011
025	32160-18440	CUSHION	2				0.013	0.0286
026	66204-45970	SUPPORT SPRING	2				0.1	0.22
027	66204-45980	SPRING SEAT	2				0.1	0.22
028	04012-50080	WASHER PLAIN	2				0.001	0.0022
029	05511-50215	PIN SPLIT	2				0.001	0.0022
030	66704-54950	BRACKET SMV	1				0	0
031	01050-50616	BOLT	2				0	0
032	04013-50060	WASHER PLAIN	2				0	0
033	04512-50060	WASHER SPRING	2				0	0
034	02014-50060	NUT	2				0.003	0.0066
035	66704-83500	ASSY COVER SEAT	1			REF.NO.003 036 AND 037	0.4	0.88
036	35110-85050	EYE-LET	4				0.005	0.011
037	35110-85060	PROTECTOR	3				0.01	0.022

silvermorn.co.uk

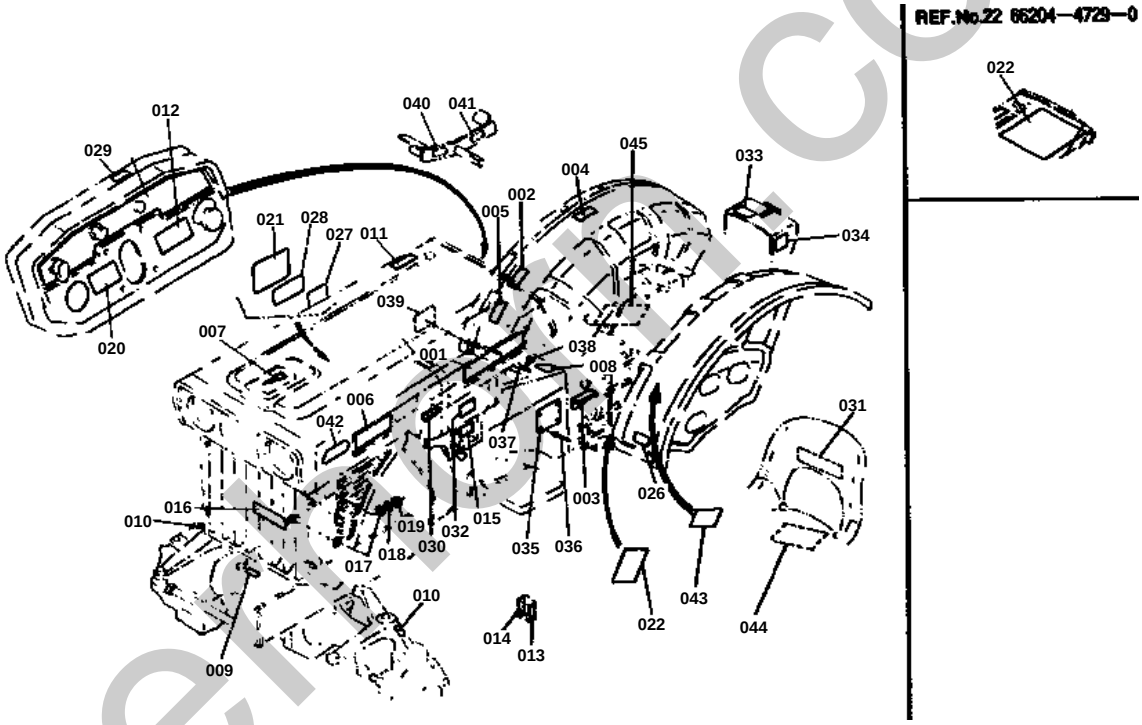

silvermill.co.uk

NAME PLATE

↔ Interchangeable; ≠ not interchangeable; ← new for old; → old for new

REF.No	Part No.	Description	Q'ty	S.No.	I/C	REMARKS	Weight (kgf)	Weight (lb)
001	66621-47110	LABEL KUBOTA	2				0.004	0.0088
002	66204-47120	LABEL	1				0	0
003	66204-47133	LABEL	1				0.001	0.0022
004	66706-47140	NAME PLATE 6	1				0	0
005	66706-47150	NAME PLATE 7	1				0	0
006	66104-47180	NAME PLATE	2				0.002	0.0044
007	66591-47190	NAME PLATE 9	1				0.001	0.0022
008	66204-47190	LABEL OIL	1				0.001	0.0022
009	66706-47210	LABEL OIL	1				0.001	0.0022
010	66706-47220	LABEL OIL	2				0.001	0.0022
011	66204-47230	LABEL	1				0.001	0.0022
012	66706-47240	LABEL	1				0.001	0.0022
013	31220-15970	MARK	1				0.001	0.0022
014	66706-47250	NAME PLATE	1				0.001	0.0022
015	66706-47260	NAME PLATE	1				0.001	0.0022
016	66601-47230	NAME PLATE	1				0.02	0.044
017	04013-50040	WASHER PLAIN	4				0	0
018	04512-50040	WASHER SPRING	2				0	0
019	02054-50040	NUT	2				0.001	0.0022
020	66706-47270	LABEL	1				0.001	0.0022
021	66706-47280	LABEL	1				0.003	0.0066
022	66204-47290	LABEL	1	<=10740			0.01	0.022
022	35260-34900	LABEL	1	>=10741			0	0
026	66204-47350	LABEL	1				0	0
027	66204-47360	LABEL	1				0.001	0.0022
028	66204-47370	LABEL	1				0.002	0.0044
029	66706-47370	LABEL	1				0.001	0.0022
030	35170-18290	LABEL	2				0.003	0.0066
031	32140-18470	MARK KUBOTA	1				0.002	0.0044
032	66706-47420	LABEL	1				0.001	0.0022
033	66706-47460	NAME PLATE	1				0.002	0.0044
034	35110-21990	LABEL	1				0.001	0.0022
035	66104-47460	NAME PLATE	1				0.015	0.033
036	54102-24410	RIVET	4				0.001	0.0022
037	66104-47510	NAME PLATE	1				0.03	0.066
038	03004-50610	SCREW	4				0.004	0.0088
039	66204-47520	LABEL	1				0.001	0.0022
040	66204-47530	LABEL	1				0	0
041	66204-47540	LABEL	1				0	0
042	66204-47550	MARK	2				0.003	0.0066
043	35200-25340	LABEL PTO	1				0.002	0.0044
044	35260-29790	LABEL	1	>=10741			0.002	0.0044
045	35260-29780	LABEL ROPS	1	>=10741			0	0

silvernorn.co.uk

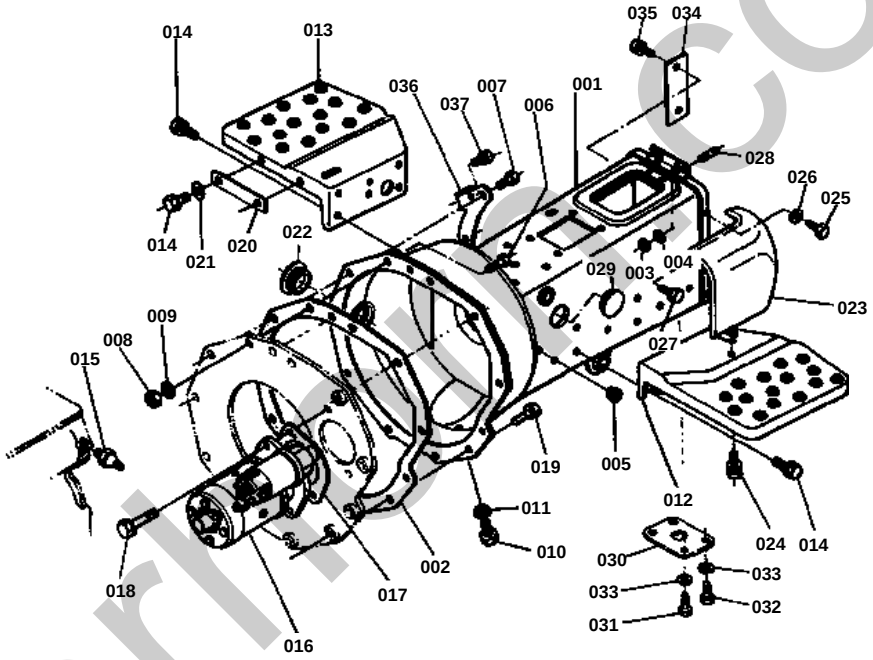

silverline.co.uk

CLUTCH HOUSING

↔ Interchangeable; ≠ not interchangeable; ← new for old; → old for new

REF.No	Part No.	Description	Q'ty	S.No.	I/C	REMARKS	Weight (kgf)	Weight (lb)
001	66204-51110	HOUSING CLUTCH	1				0	0
002	66621-51410	GASKET	1				0	0
003	02174-50120	NUT	2				0.01	0.022
004	04512-50120	WASHER SPRING	4				0	0
005	66591-54390	PLUG	10				0.001	0.0022
006	01153-50825	BOLT	1				0.012	0.0264
007	01153-50828	BOLT	2				0.014	0.0308
008	02114-50080	NUT	3				0.005	0.011
009	04512-50080	WASHER SPRING	3				0	0
010	06331-35010	PLUG	1				0.012	0.0264
011	04717-01000	WASHER SEAL	1				0.001	0.0022
012	66711-51130	STEP LH	1				2.078	4.5716
013	66204-51140	STEP RH	1				1.85	4.07
014	01120-50818	BOLT	12				0	0
015	15231-39010	SWITCH OIL	1				0	0
016	15231-63010	ASSY STARTER	1				0	0
017	66591-51160	GASKET	1				0	0
018	01123-50828	BOLT	2				0.014	0.0308
019	01123-50825	BOLT	8				0.013	0.0286
020	66711-51180	PLATE	1				0.045	0.099
021	04013-50080	WASHER PLAIN	2				0	0
022	66704-51190	CAP	1				0.009	0.0198
023	66204-82610	COVER	1				0.25	0.55
024	01120-50814	BOLT	2				0	0
025	66204-51150	BOLT	4				0	0
026	04512-50140	WASHER SPRING	4				0	0
027	01153-51230	BOLT	2				0.036	0.0792
028	01555-51220	STUD	2				0.034	0.0748
029	66204-51160	CAP	1				0.007	0.0154
030	66204-51180	PLATE	1				0.44	0.968
031	01173-51225	BOLT	2				0.033	0.0726
032	01153-51230	BOLT	2				0.036	0.0792
033	04512-50120	WASHER SPRING	4				0	0
034	66204-51190	CAP	1				0.075	0.165
035	01120-50818	BOLT	2				0	0
036	66704-36150	HOLDER	1				0.06	0.132
037	01120-50814	BOLT	1				0	0

silverhorn.co.uk

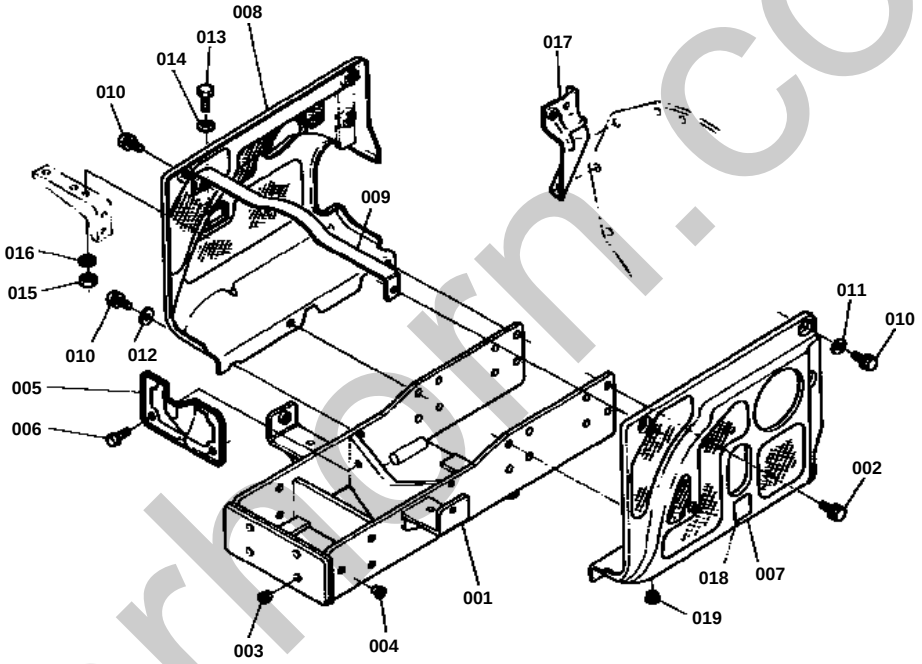

silverhorn.co.uk

FRONT WHEEL SUPPORT

↔ Interchangeable; ≠ not interchangeable; ← new for old; → old for new

REF.No	Part No.	Description	Q'ty	S.No.	I/C	REMARKS	Weight (kgf)	Weight (lb)
001	66704-51210	SUPPORT FRONT WHEEL	1				17	37.4
002	01133-51025	BOLT	16				0.023	0.0506
003	66591-54390	PLUG	8				0.001	0.0022
004	67111-11140	PLUG M12	6				0	0
004	67211-11140	PLUG M12	6	>=10001			0.001	0.0022
005	66704-51280	COVER FRONT	1				0.11	0.242
006	01120-50825	BOLT	2				0	0
007	66709-51370	COVER SIDE LH	1				0.97	2.134
008	66204-51330	COVER SIDE RH	1				0.9	1.98
009	66711-51380	STAY SIDE COVER	1				0.215	0.473
010	01202-50614	BOLT	8				0.006	0.0132
011	04013-50060	WASHER PLAIN	4				0	0
012	04015-50060	WASHER PLAIN	2				0	0
013	01150-50818	BOLT	1				0	0
014	04013-50080	WASHER PLAIN	1				0	0
015	02114-50080	NUT	1				0.005	0.011
016	04512-50080	WASHER SPRING	1				0	0
017	66711-51350	STAY FILTER	1				0.146	0.3212
018	66706-47330	LABEL	1				0.001	0.0022
019	66591-54580	RUBBER	1				0.003	0.0066

silverhorn.co.uk

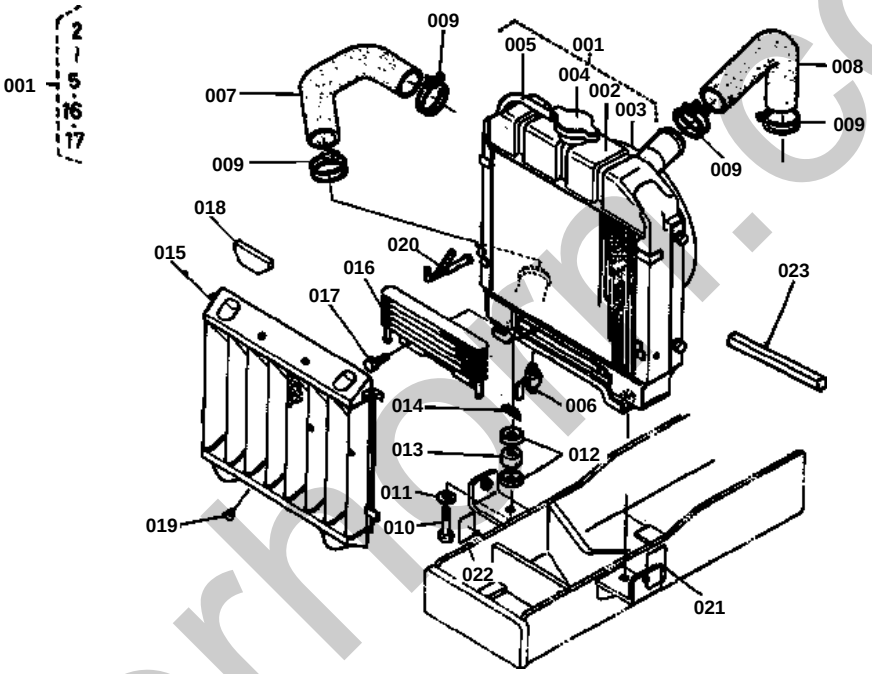

silverhome.co.uk

RADIATOR

↔ Interchangeable; ≠ not interchangeable; ← new for old; → old for new

REF.No	Part No.	Description	Q'ty	S.No.	I/C	REMARKS	Weight (kgf)	Weight (lb)
001	15553-72060	ASSY RADIATOR	1			REF.NO.002 TO 005 016 AND 017	6	13.2
002	99999-99999	BLANK	0			ORDER BY REF.NO.001	0	0
003	15371-74470	COVER FAN	1				0.4	0.88
004	15101-72030	CAP RADIATOR	1				0.075	0.165
005	15401-72710	PIPE WATER OVER FLOW	1				0.032	0.0704
006	14301-73110	COCK DRAIN	1				0.094	0.2068
007	15371-72850	PIPE WATER 1	1				0.21	0.462
008	15371-72940	PIPE WATER 4	1				0.164	0.3608
009	15108-72870	BAND	4				0.027	0.0594
010	66711-51340	BOLT RADIATOR STOP.	2				0.032	0.0704
011	04013-50100	WASHER PLAIN	2				0	0
012	15111-72200	WASHER	4				0.013	0.0286
013	15111-72180	CUSHION	2				0.015	0.033
014	05515-51000	PIN SNAP	2				0	0
015	66204-51415	NET RADIATOR	1				0.8	1.76
016	66204-58710	COOLER OIL	1				0.38	0.836
017	01202-50612	BOLT	2				0.005	0.011
018	66204-51420	TAPE	2				0.002	0.0044
019	63763-52580	RUBBER	4				0.001	0.0022
020	66204-58750	WHISTLE STEEM	1				0.028	0.0616
021	66706-58810	LABEL RADIATOR	1				0.001	0.0022
022	66706-58820	LABEL	1				0.001	0.0022
023	66204-58730	TAPE RADIATOR	1				0.01	0.022

silverhorn.co.uk

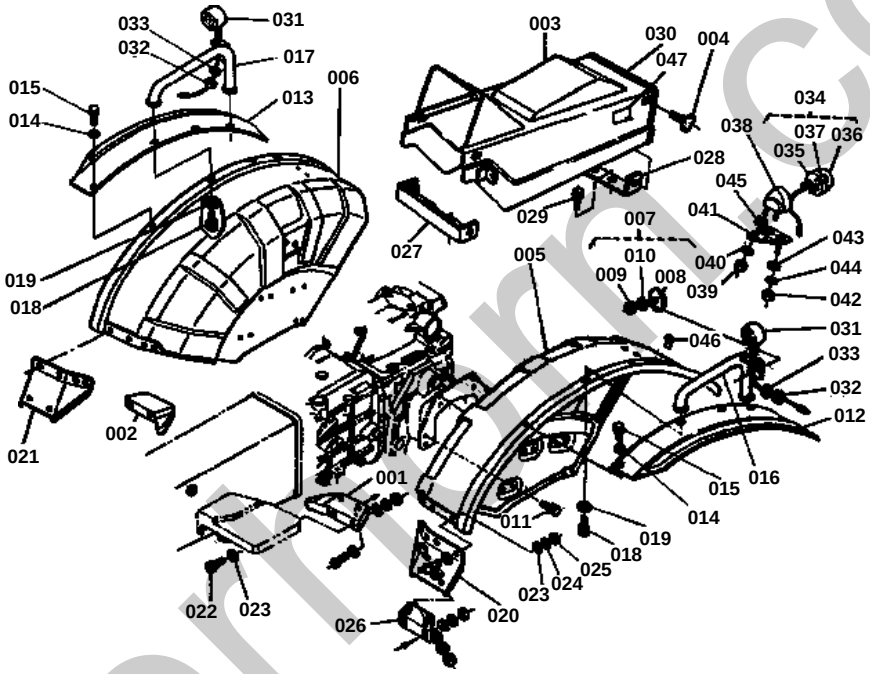

silverfarm.co.uk

FENDER

↔ Interchangeable; ≠ not interchangeable; ← new for old; → old for new

REF.No	Part No.	Description	Q'ty	S.No.	I/C	REMARKS	Weight (kgf)	Weight (lb)
001	66204-51050	STEP LH	1				0.233	0.5126
002	66204-51060	STEP RH	1				0.23	0.506
003	66204-53110	COVER	1				1.95	4.29
004	01820-50615	BOLT	4				0.017	0.0374
005	66706-52710	FENDER LH	1				3.8	8.36
006	66706-52720	FENDER RH	1				3.6	7.92
007	66591-52300	ASSY REFLECTOR	2			REF.NO.008 TO 010	0.006	0.0132
008	53143-61240	REFLECTOR	2				0.009	0.0198
009	02054-50050	NUT	2				0.002	0.0044
010	04512-50050	WASHER SPRING	2				0	0
011	01120-50818	BOLT	8				0	0
012	66611-52732	FENDER EXTENTION LH	1				0.626	1.3772
013	66611-52742	FENDER EXTENTION RH	1				0.65	1.43
014	04013-50060	WASHER PLAIN	6				0	0
015	01202-50614	BOLT	6				0.006	0.0132
016	66611-52750	BALUSTRADE LH	1				0.264	0.5808
017	66611-52760	BALUSTRADE RH	1				0.258	0.5676
018	01120-50820	BOLT	4				0	0
019	04013-50080	WASHER PLAIN	4				0	0
020	66711-51150	PLATE SUB LH	1				0.143	0.3146
021	66711-51160	PLATE SUB RH	1				0.135	0.297
022	03014-50614	SCREW	20				0.003	0.0066
023	04013-50060	WASHER PLAIN	40				0	0
024	04512-50060	WASHER SPRING	20				0	0
025	02014-50060	NUT	20				0.003	0.0066
026	66711-51170	STAY	2				0.044	0.0968
027	66204-53130	STAY FRONT	1				0.165	0.363
028	66204-53140	STAY REAR	1				0.09	0.198
029	01120-50820	BOLT	2				0	0
030	66204-53150	RUBBER	1				0.02	0.044
031	67111-55470	ASSY CAMP FLASHER	2				0	0
032	02114-50080	NUT	2				0.005	0.011
033	04512-50080	WASHER	2				0	0
034	66704-55520	ASSY LAMP TAIL	1			REF.NO.035 TO 037	0.11	0.242
035	66704-55540	BODY TAIL LAMP	1				0.06	0.132
036	66704-55550	LENS TAIL LAMP	1				0.045	0.099
037	66704-55560	BULB TAIL LAMP	1				0.007	0.0154
038	34350-34190	BRACKET TAIL LAMP	1				0.107	0.2354
039	02014-50060	NUT	2				0.003	0.0066
040	04512-50060	WASHER SPRING	2				0	0
041	66704-55530	STAY TAIL LAMP	1				0	0
042	02014-50060	NUT	2				0.003	0.0066
043	04015-50060	WASHER PLAIN	2				0	0
044	04512-50060	WASHER SPRING	2				0	0
045	66591-54580	RUBBER	1				0.003	0.0066
046	63763-52580	RUBBER	6				0.001	0.0022
047	66204-47140	LABEL	1				0.001	0.0022

silverhorn.co.uk

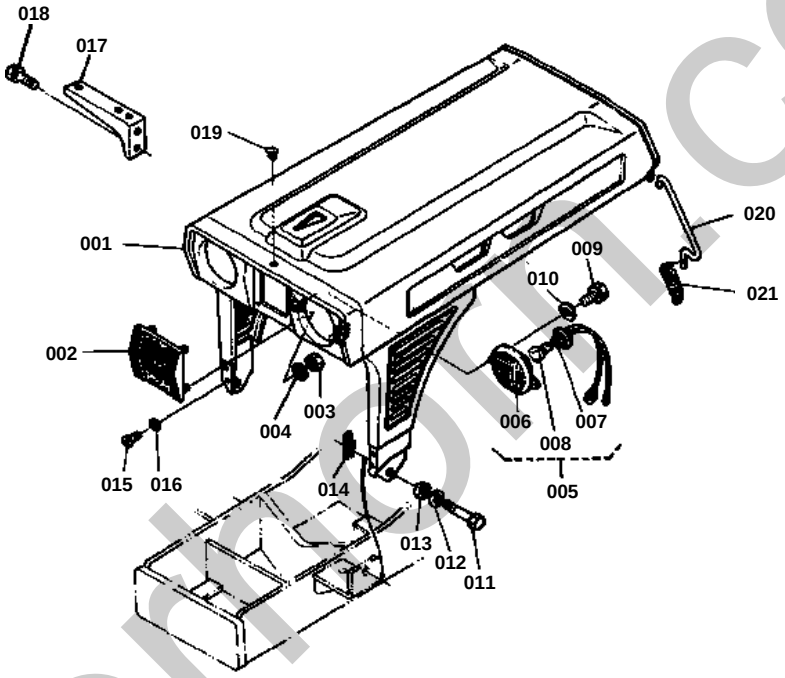

silvermoor.co.uk

BONNET

↔ Interchangeable; ≠ not interchangeable; ← new for old; → old for new

REF.No	Part No.	Description	Q'ty	S.No.	I/C	REMARKS	Weight (kgf)	Weight (lb)
001	66711-54110	BONNET	1				9.2	20.24
002	66711-54140	MASCOT	1				0.09	0.198
003	02014-50060	NUT	4				0.003	0.0066
004	04512-50060	WASHER SPRING	4				0	0
005	66711-54120	ASSY LAMP HEAD	2			REF.NO.006 TO 008	0.15	0.33
006	66591-55610	LAMP HEAD	2				0.15	0.33
007	66711-54130	SOCKET	2				0.016	0.0352
008	66591-55630	BULB	2				0.008	0.0176
009	01202-50612	BOLT	4				0.005	0.011
010	04013-50060	WASHER PLAIN	4				0	0
011	66711-54150	BOLT BONNET STOPPER	2				0.026	0.0572
012	04015-50100	WASHER PLAIN	2				0.016	0.0352
013	34150-18180	CUSHION	2				0.003	0.0066
014	05515-51000	PIN SNAP	2				0	0
015	03004-50812	SCREW	4				0.008	0.0176
016	04012-50080	WASHER PLAIN	4				0.001	0.0022
017	66711-54310	STAY AIR CLEANER	1				0.306	0.6732
018	01123-50820	BOLT	2				0.011	0.0242
019	63763-52580	RUBBER	1				0.001	0.0022
020	66751-55210	LATCH BONNET	2				0.04	0.088
021	66711-55220	SPRING	2				0.01	0.022

silverhorn.co.uk

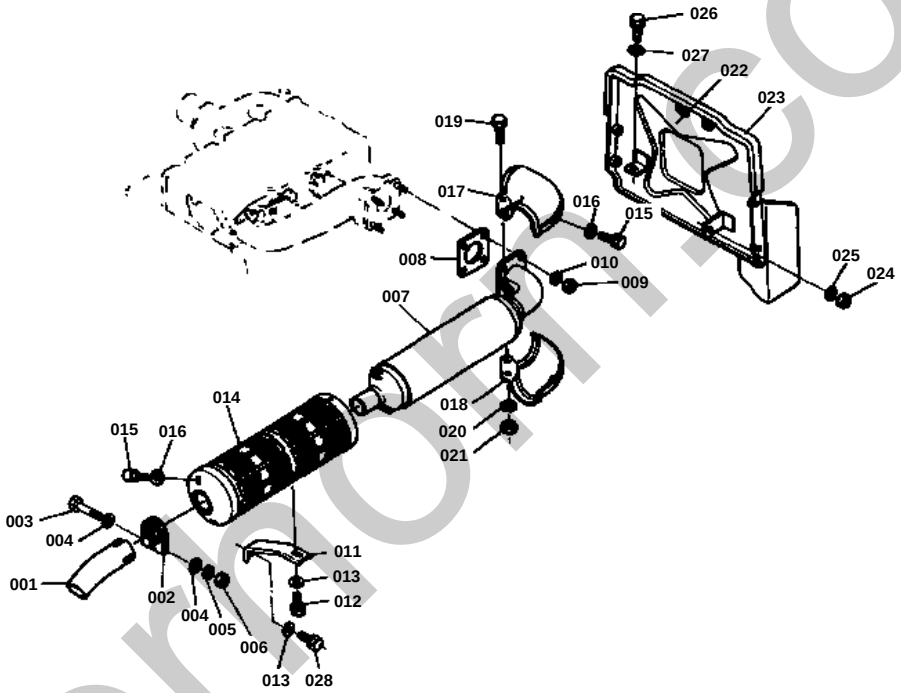

silvermoor.co.uk

MUFFLER

↔ Interchangeable; ≠ not interchangeable; ← new for old; → old for new

REF.No	Part No.	Description	Q'ty	S.No.	I/C	REMARKS	Weight (kgf)	Weight (lb)
001	66711-54410	PIPE MUFFLER	1				0.137	0.3014
002	66711-54420	BAND MUFFLER	1				0.038	0.0836
003	01150-50865	BOLT	1				0	0
004	04013-50080	WASHER PLAIN	2				0	0
005	04512-50080	WASHER SPRING	1				0	0
006	02114-50080	NUT	1				0.005	0.011
007	15371-12110	MUFFLER	1				0	0
007	66706-54510	MUFFLER	1	>=10001			2.8	6.16
008	15371-12370	GASKET MUFFLER	1				0	0
009	02114-50080	NUT	4				0.005	0.011
010	04512-50080	WASHER SPRING	4				0	0
011	66711-54530	STAY MUFFLER	1				0.096	0.2112
012	01120-50814	BOLT	1				0	0
013	04013-50080	WASHER PLAIN	2				0	0
014	66711-54520	COVER MUFFLER	1				0.878	1.9316
015	01202-50612	BOLT	4				0.005	0.011
016	04013-50060	WASHER PLAIN	4				0	0
017	66711-54550	COVER MUFFLER LH	1				0.137	0.3014
018	66711-54560	COVER MUFFLER RH	1				0.135	0.297
019	01050-50628	BOLT	2				0	0
020	04512-50060	WASHER SPRING	2				0	0
021	02014-50060	NUT	2				0.003	0.0066
022	66711-54610	COVER	1				1.066	2.3452
023	66711-54620	TAPE	1				0.005	0.011
024	02114-50080	NUT	1				0.005	0.011
025	04512-50080	WASHER SPRING	1				0	0
026	01120-50816	BOLT	1				0	0
027	04013-50080	WASHER PLAIN	1				0	0
028	01120-50818	BOLT	1				0	0

silverhorn.co.uk

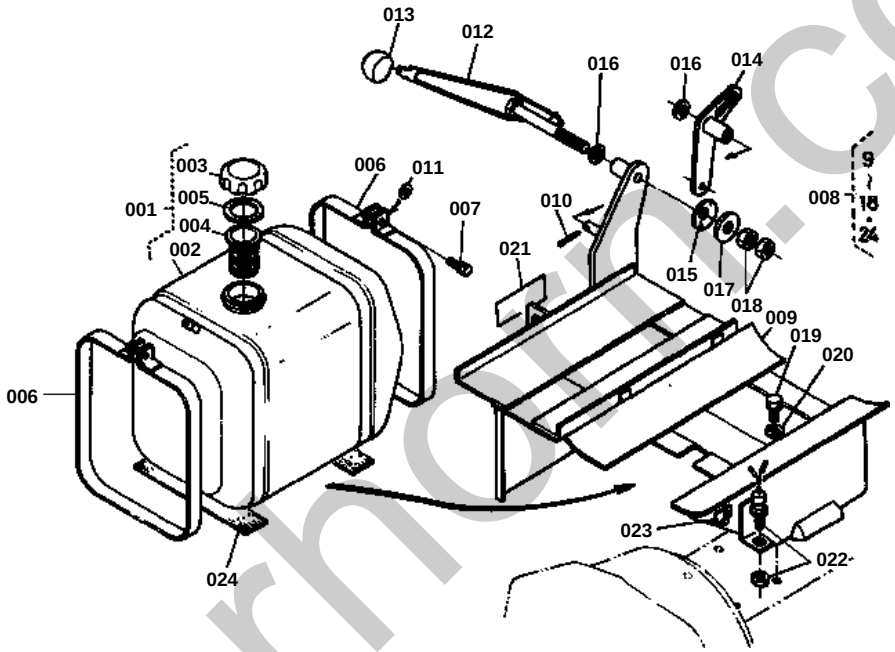

silverhorn.co.uk

FUEL TANK

↔ Interchangeable; ≠ not interchangeable; ← new for old; → old for new

REF.No	Part No.	Description	Q'ty	S.No.	I/C	REMARKS	Weight (kgf)	Weight (lb)
001	66711-54700	ASSY TANK FUEL	1			REF.NO.002 TO 005	0	0
002	99999-99999	BLANK	0			ORDER BY REF.NO.001	0	0
003	66621-54820	ASSY CAP FUEL	1				0.028	0.0616
004	13251-41060	FILTER	1				0.01	0.022
005	10211-41340	GASKET	1				0.003	0.0066
006	66711-54760	BAND FUEL TANK	2				0	0
007	01120-50830	BOLT	2				0	0
008	66204-54800	ASSY BRACKET TANK	1			REF.NO.009 TO 018 AND 024	3.5	7.7
009	66204-54770	BRACKET TANK BATTERY	1				3.3	7.26
010	05511-52518	PIN SPLIT	1				0.001	0.0022
011	04013-50080	WASHER PLAIN	2				0	0
012	66204-43220	LEVER THROTTLE	1				0.185	0.407
013	66611-43240	GRIP LEVER	1				0.018	0.0396
014	66204-43230	ARM	1				0.1	0.22
015	32210-17190	SPRING	1				0.005	0.011
016	04013-50100	WASHER PLAIN	2				0	0
017	04015-50100	WASHER PLAIN	1				0.016	0.0352
018	02116-50100	NUT	2				0.004	0.0088
019	01120-50816	BOLT	4				0	0
020	04013-50080	WASHER PLAIN	4				0	0
021	66706-47360	LABEL BRAKE	1				0.002	0.0044
022	66204-32240	SWITCH SAFETY	1				0	0
023	66611-55190	CLAMP CORD 2	1				0.001	0.0022
024	66641-54740	CUSHION	2				0.065	0.143

silverhorn.co.uk

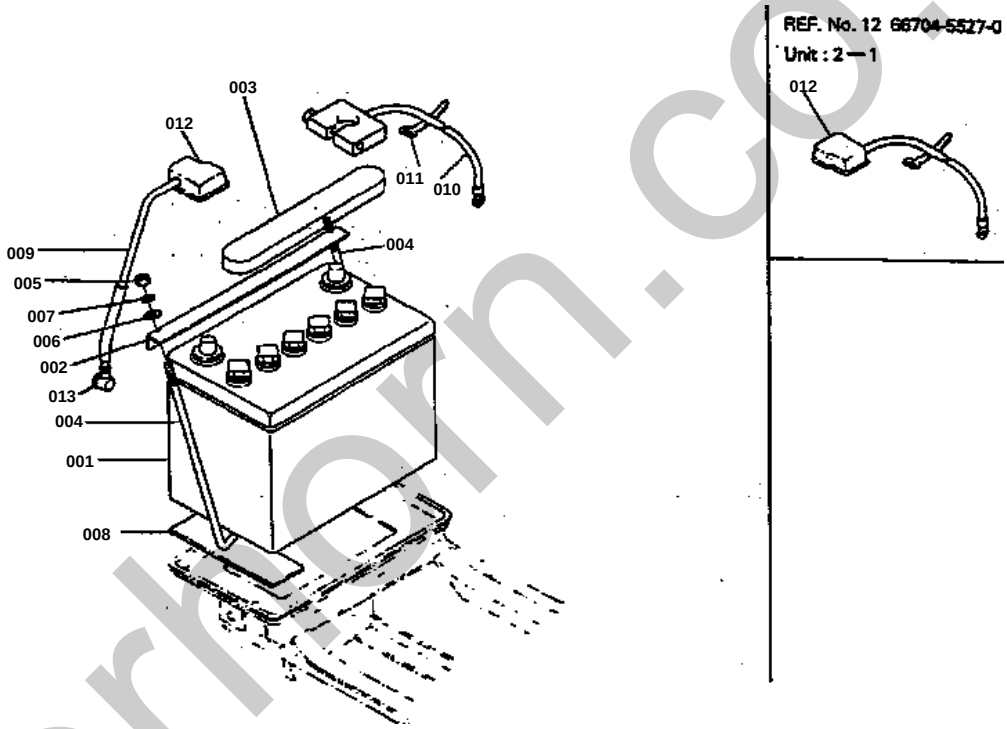

silverhorn.co.uk

BATTERY

↔ Interchangeable; ≠ not interchangeable; ← new for old; → old for new

REF.No	Part No.	Description	Q'ty	S.No.	I/C	REMARKS	Weight (kgf)	Weight (lb)
001	66704-55430	BATTERY	1				9.3	20.46
002	66704-54482	RETAINER BATTERY	1				0.14	0.308
003	66641-55430	COVER BATTERY	1				0.07	0.154
004	66591-54490	BOLT	2				0.048	0.1056
005	02014-50060	NUT	2				0.003	0.0066
006	04013-50060	WASHER PLAIN	2				0	0
007	04512-50060	WASHER SPRING	2				0	0
008	66591-54510	CUSHION BATTERY	2				0.02	0.044
009	66709-55450	CORD BATTERY	1				0.25	0.55
010	66704-55460	CORD BATTERY	1				0.165	0.363
011	34350-29380	CLAMP	1				0.001	0.0022
012	66704-55270	CAP TERMINAL	1				0.015	0.033
013	66591-55190	CAP TERMINAL	1				0.012	0.0264

silverhorn.co.uk

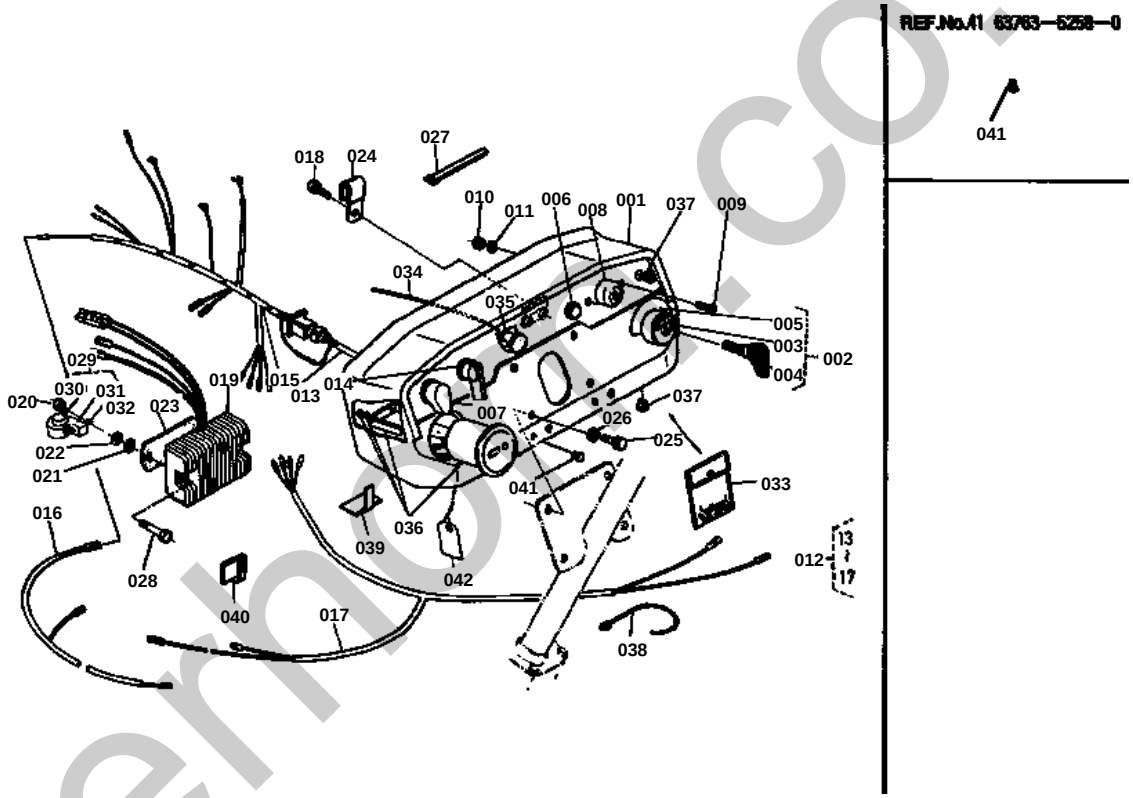

silverhorse.co.uk

PANEL

↔ Interchangeable; ≠ not interchangeable; ← new for old; → old for new

REF.No	Part No.	Description	Q'ty	S.No.	I/C	REMARKS	Weight (kgf)	Weight (lb)
001	66204-55112	PANEL	1				0	0
002	66706-55120	ASSY SWITCH STARTER	1			REF.NO.003 TO 005	0.256	0.5632
003	66711-55130	SWITCH STARTER	1				0.241	0.5302
004	66711-55140	KEY	2				0	0
005	66706-55150	LABEL STARTER SWITCH	1				0.001	0.0022
006	66711-55290	ASSY LAMP OIL	1				0.016	0.0352
007	55311-41120	SWITCH	1				0.05	0.11
008	15231-65950	LAMP GLOW PLUG	1				0.045	0.099
009	01050-50512	BOLT	2				0.003	0.0066
010	02054-50050	NUT	2				0.002	0.0044
011	04512-50050	WASHER SPRING	2				0	0
012	66204-55160	ASSY WIRE HARNESS	1			REF.NO.013 TO 017	0.565	1.243
013	66204-55170	WIRE HARNESS 1	1				0.285	0.627
014	66621-55190	SWITCH LIGHTING	1				0.067	0.1474
015	66204-55182	WIRE HARNESS 2	1				0.2	0.44
016	66711-55190	WIRE HARNESS 3	1				0.017	0.0374
017	66204-55192	WIRE HARNESS 4	1				0.095	0.209
018	01202-50612	BOLT	2				0.005	0.011
019	15372-64600	REGULATOR	1				0.22	0.484
020	02014-50060	NUT	2				0.003	0.0066
021	04013-50060	WASHER PLAIN	2				0	0
022	04512-50060	WASHER SPRING	2				0	0
023	66704-55260	CUSHION	1				0.009	0.0198
024	13313-69750	ASSY CLAMP CORD	1				0	0
025	01120-50818	BOLT	4				0	0
026	04013-50080	WASHER PLAIN	4				0	0
027	34350-29380	CLAMP	1				0.001	0.0022
028	01050-50640	BOLT	2				0	0
029	66204-55812	UNIT	1			REF.NO.030 031	0.06	0.132
030	66204-55830	BODY	1				0.5	1.1
031	66204-55840	BAND	1				0.006	0.0132
032	66204-55820	STAY	1				0.01	0.022
033	66591-55520	ASSY FUSE	1				0.004	0.0088
034	66711-43510	WIRE DECOMPRESS	1				0.093	0.2046
035	04011-50100	WASHER PLAIN	1				0.002	0.0044
036	66704-55310	METER HOUR	1				0.22	0.484
037	35110-32420	PLUG	3				0.002	0.0044
038	66704-55510	BAND	1				0.002	0.0044
039	66611-55190	CLAMP 2	6				0.001	0.0022
040	66706-55220	CLAMP	10				0.002	0.0044
041	63763-52580	RUBBER	2	<=10644			0.001	0.0022
041	13151-67160	PLUG	2	>=10645			0.01	0.022
042	66706-47380	CARD CAUTION	1				0.001	0.0022

silverhorn.co.uk

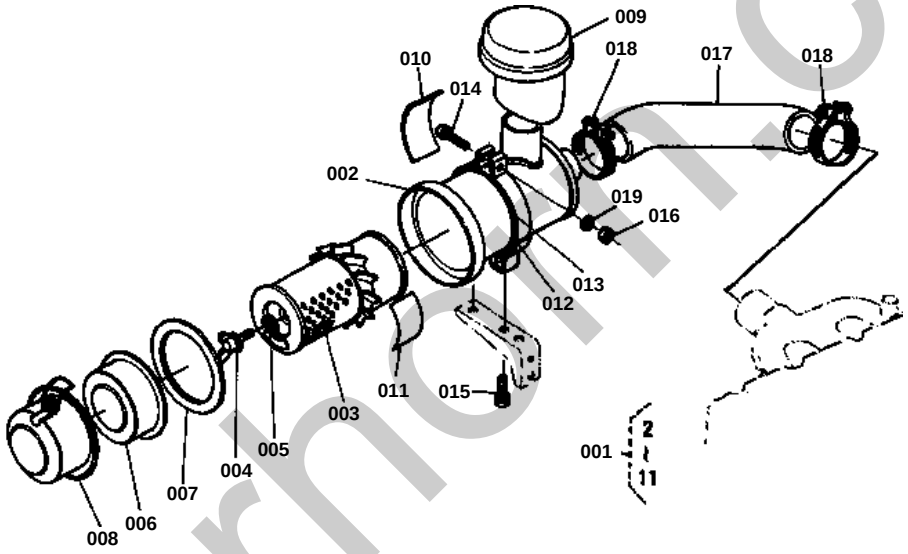

silvermoff.co.uk

AIR CLEANER

↔ Interchangeable; ≠ not interchangeable; ← new for old; → old for new

REF.No	Part No.	Description	Q'ty	S.No.	I/C	REMARKS	Weight (kgf)	Weight (lb)
001	15372-11010	ASSY AIR CLEANER	1			REF.NO.002 TO 011	0	0
002	15241-11150	BODY AIR CLEANER	1				0.69	1.518
003	15221-11220	ELEMENT AIR CLEANER	1				0	0
004	15221-92620	BOLT WING	1				0.04	0.088
005	15221-94430	WASHER SEAL	1				0.004	0.0088
006	15221-14110	COVER BAFFLE	1				0	0
007	15221-11170	GASKET COVER	1				0.01	0.022
008	15241-11160	COVER AIR CLEANER	1				0.255	0.561
009	15241-11350	CAP AIR CLEANER	1				0.48	1.056
010	15372-87452	LABEL AIR CLEANER	1				0.001	0.0022
011	15227-87480	LABEL ELEMENT	1				0.004	0.0088
012	15371-11250	BAND AIR CLEANER	1				0	0
013	15371-11870	CUSHION	1				0.025	0.055
014	01222-50830	BOLT	1				0.013	0.0286
015	01120-50816	BOLT	2				0	0
016	02114-50080	NUT	1				0.005	0.011
017	15371-11620	PIPE INLET	1				0.2	0.44
018	15221-11720	BAND PIPE	2				0.03	0.066
019	04512-50080	WASHER SPRING	1				0	0

silverhorn.co.uk

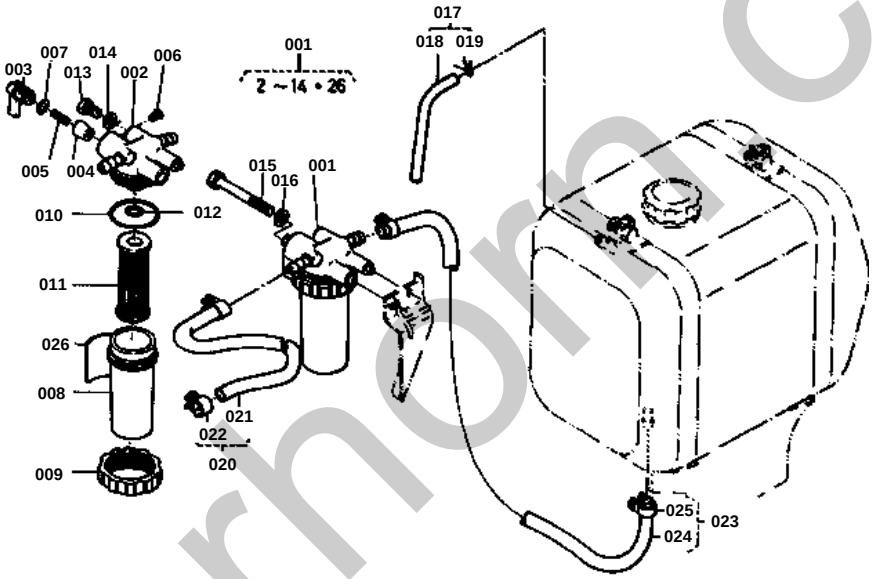

silverhorn.co.uk

FUEL FILTER

↔ Interchangeable; ≠ not interchangeable; ← new for old; → old for new

REF.No	Part No.	Description	Q'ty	S.No.	I/C	REMARKS	Weight (kgf)	Weight (lb)
001	15261-43010	ASSY FILTER FUEL	1			REF.NO.002 TO 014 026	0	0
002	99999-99999	BLANK	0			ORDER BY REF.NO.001	0	0
003	14301-43522	LEVER COCK	1				0.024	0.0528
004	15231-43810	TAPER VALVE	1				0.002	0.0044
005	14301-43820	SPRING VALVE	1				0.001	0.0022
006	14301-43830	SCREW LEVER	1				0.001	0.0022
007	14301-43840	O RING LEVER	1				0.001	0.0022
008	15231-43580	CUP FILTER	1				0	0
009	14301-43590	RETERING RING	1				0.054	0.1188
010	14301-43650	O RING FILTER	1				0.001	0.0022
011	15231-43560	ASSY ELEMENT	1				0.03	0.066
012	04811-00100	O RING FILTER	1				0.001	0.0022
013	15231-43283	PLUG BREATHER	2				0.003	0.0066
014	04810-00060	O RING	2				0.001	0.0022
015	01150-50865	BOLT	1				0	0
016	04512-50080	WASHER SPRING	1				0	0
017	15371-42050	ASSY PIPE OVER FLOW	1			REF.NO.018 019	0.016	0.0352
018	99999-99999	BLANK	0			ORDER BY REF.NO.017	0	0
019	10244-42320	CLIP PIPE	2				0.001	0.0022
020	15371-42020	ASSY PIPE FUEL 1	1			REF.NO.021 022	0.034	0.0748
021	99999-99999	BLANK	0			ORDER BY REF.NO.020	0	0
022	14301-42750	CLIP PIPE	2				0.005	0.011
023	15371-42030	ASSY PIPE FUEL 2	1			REF.NO.024 025	0	0
024	99999-99999	BLANK	0			ORDER BY REF.NO.023	0	0
025	14301-42750	CLIP PIPE	2				0.005	0.011
026	66706-58310	LABEL	1				0.001	0.0022

silverhorn.co.uk

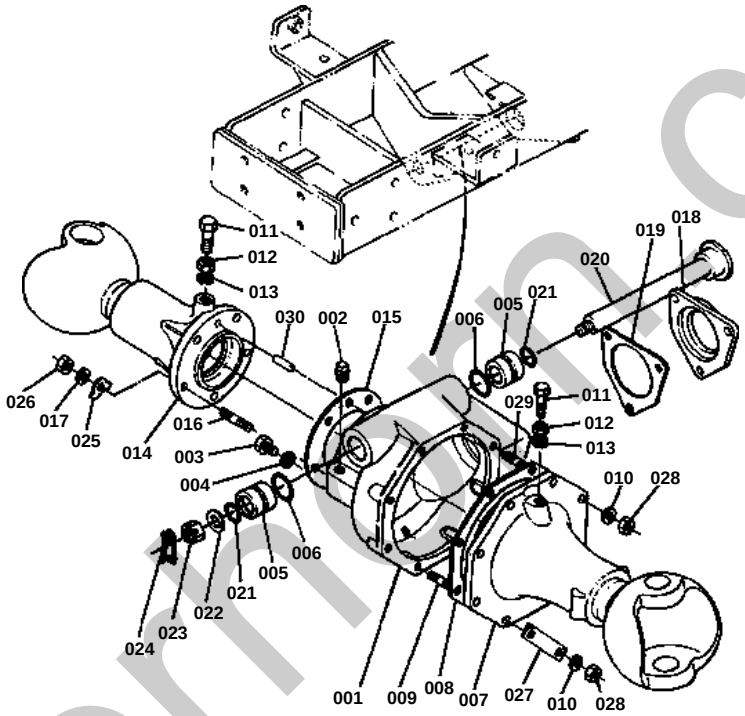

silvermoon.co.uk

FRONT AXLE CASE [DP]

↔ Interchangeable; ≠ not interchangeable; ← new for old; → old for new

REF.No	Part No.	Description	Q'ty	S.No.	I/C	REMARKS	Weight (kgf)	Weight (lb)
001	66751-56160	CASE FRONT AXLE 1	1				6.5	14.3
002	06312-10020	PLUG	1				0.015	0.033
003	06331-35010	PLUG	1				0.012	0.0264
004	04717-01000	WASHER SEAL	1				0.001	0.0022
005	66591-56120	BUSH	2				0.074	0.1628
006	04811-50250	O RING	2				0.001	0.0022
007	66751-56210	CASE FRONT AXLE LH	1				6.29	13.838
008	66591-56190	GASKET	1				0	0
009	01518-50820	STUD	7				0.012	0.0264
010	04512-50080	WASHER SPRING	8				0	0
011	66591-56280	BOLT	2				0	0
012	02112-50120	NUT	2				0.007	0.0154
013	04512-50120	WASHER SPRING	2				0	0
014	66711-56310	CASE FRONT AXLE RH	1				5	11
015	66711-56320	GASKET	1				0	0
016	01555-51022	STUD	5				0.021	0.0462
017	04512-50100	WASHER SPRING	5				0	0
018	66591-56183	COVER	1				0.415	0.913
019	66591-56172	GASKET	1				0	0
020	66802-56110	PIN CENTER	1				0.58	1.276
021	04811-00200	O RING	2				0.001	0.0022
022	04011-50180	WASHER PLAIN	1				0.012	0.0264
023	02372-50180	NUT SLOTTED	1				0.019	0.0418
024	66611-57150	PIN SET	1				0.02	0.044
025	66611-56610	WASHER LOCK	5				0.003	0.0066
026	02176-50100	NUT	5				0.005	0.011
027	66711-56620	PLATE LOCK	4				0.01	0.022
028	02114-50080	NUT	8				0.005	0.011
029	66711-56220	STUD	1				0.014	0.0308
030	05012-01016	PIN	1				0.01	0.022

silverhorn.co.uk

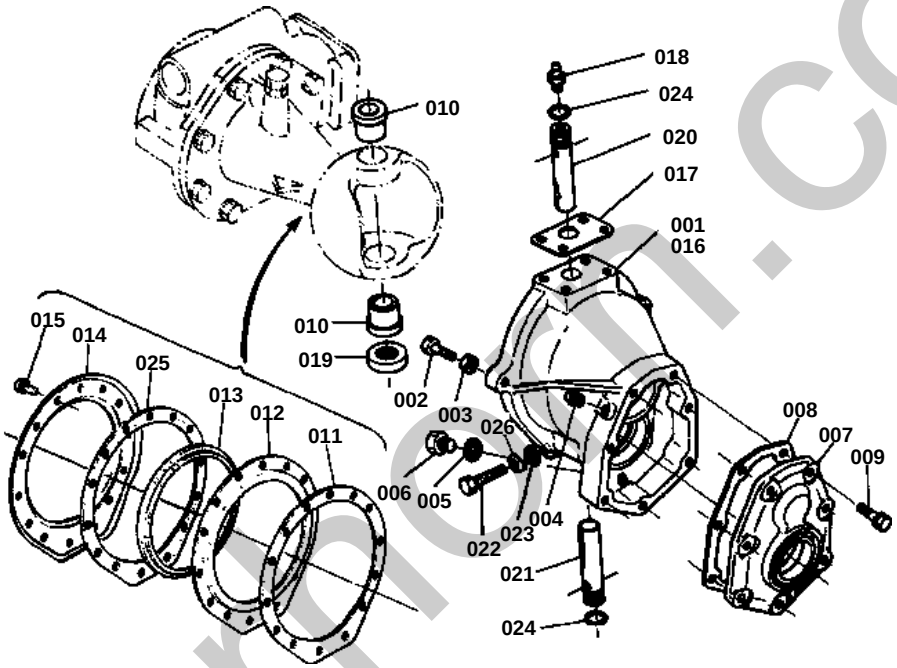

silverhorn.co.uk

FRONT WHEEL GEAR CASE [DP]

↔ Interchangeable; ≠ not interchangeable; ← new for old; → old for new

REF.No	Part No.	Description	Q'ty	S.No.	I/C	REMARKS	Weight (kgf)	Weight (lb)
001	66711-56410	CASE GEAR LH	1				4.5	9.9
002	66591-56440	BOLT	2				0.02	0.044
003	02112-50100	NUT	2				0.004	0.0088
004	06312-10020	PLUG	2				0.015	0.033
005	04717-01000	WASHER SEAL	2				0.001	0.0022
006	06331-35010	PLUG	2				0.012	0.0264
007	66711-56430	COVER GEAR CASE	2				1.078	2.3716
008	66711-56440	GASKET	2				0	0
009	01120-50828	BOLT	14				0	0
010	66711-56470	BUSH KING PIN	4				0.064	0.1408
011	66711-56560	GASKET DUST COVER	2				0	0
012	66711-56570	HOLDER DUST SEAL	2				0.096	0.2112
013	66711-56580	SEAL DUST	2				0.016	0.0352
014	66711-56590	COVER DUST	2				0.19	0.418
015	01202-50614	BOLT	28				0.006	0.0132
016	66711-56420	CASE GEAR RH	1				5.2	11.44
017	66711-56480	GASKET KNUCKLE ARM	2				0	0
018	06613-20010	NIPPLE GREASE	2				0.01	0.022
019	08400-00010	BEARING THRUST BALL	2				0.046	0.1012
020	66711-56450	PIN KING UPPER	2				0.15	0.33
021	66711-56460	PIN KING UNDER	2				0.151	0.3322
022	01173-51035	BOLT	4				0.025	0.055
023	04717-01000	WASHER	4				0.001	0.0022
024	04811-10180	O RING	4				0.001	0.0022
025	66711-56490	GASKET	2				0.011	0.0242
026	66611-56610	WASHER	4				0.003	0.0066

silverhorn.co.uk

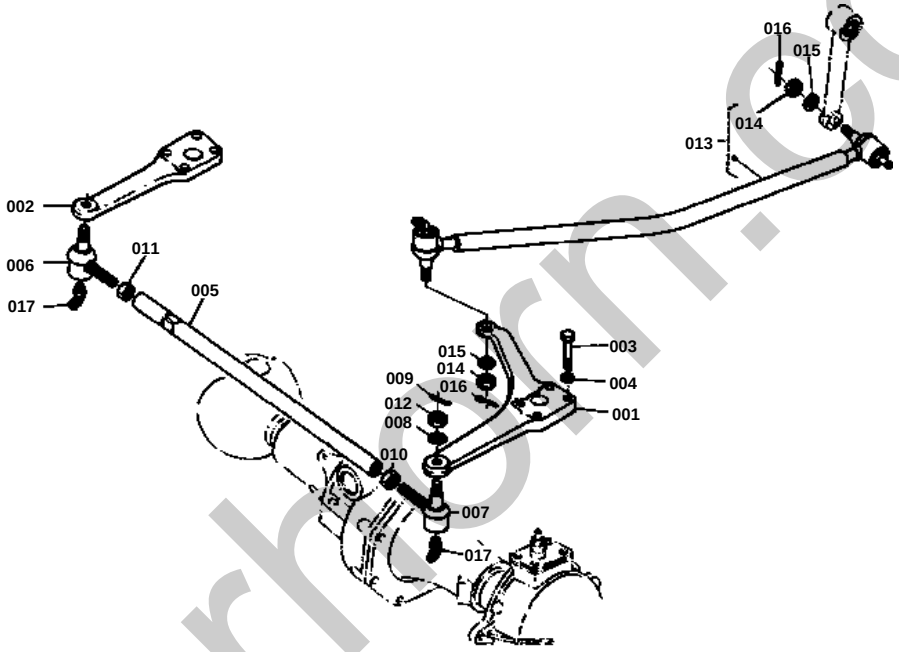

silverhorn.co.uk

KNUCKLE ARM [DP]

↔ Interchangeable; ≠ not interchangeable; ← new for old; → old for new

REF.No	Part No.	Description	Q'ty	S.No.	I/C	REMARKS	Weight (kgf)	Weight (lb)
001	66711-56510	ARM KNUCKLE LH	1				1.1	2.42
002	66711-56520	ARM KNUCKLE RH	1				0.808	1.7776
003	01153-51035	BOLT	8				0.025	0.055
004	04512-50100	WASHER SPRING	8				0	0
005	66751-56530	ROD TIE	1				0.55	1.21
006	66711-56540	ASSY END ROD 2	1				0.13	0.286
007	66711-56550	ASSY END ROD 3	1				0.18	0.396
008	04512-50100	WASHER SPRING	2				0	0
009	05511-52520	PIN SPLIT	2				0.001	0.0022
010	66591-56880	NUT LEFT	1				0.01	0.022
011	02172-50120	NUT	1				0.01	0.022
012	66591-56780	NUT SLOTTED	2				0.01	0.022
013	66104-57100	ASSY LINK DRAG	1			REF.NO.014	2.3	5.06
014	66591-56780	NUT SLOTTED	2				0.01	0.022
015	04512-50100	WASHER SPRING	2				0	0
016	05511-52528	PIN SPLIT	2				0.001	0.0022
017	66591-56930	NIPPLE GREASE	2				0.003	0.0066

silverhorn.co.uk

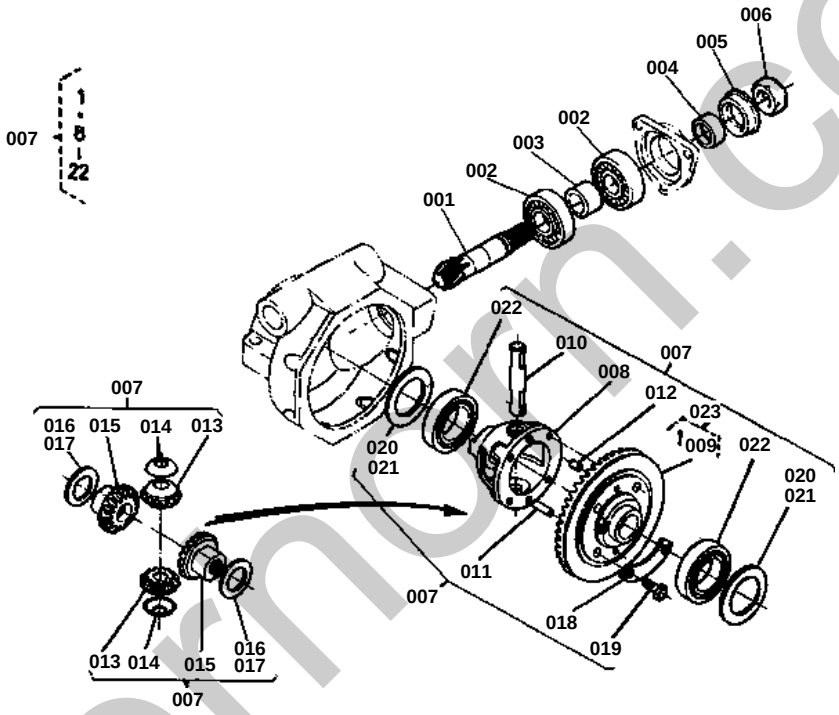

silvermorn.co.uk

FRONT DIFFERENTIAL [DP]

↔ Interchangeable; ≠ not interchangeable; ← new for old; → old for new

REF.No	Part No.	Description	Q'ty	S.No.	I/C	REMARKS	Weight (kgf)	Weight (lb)
001	99999-99999	BLANK	0			ORDER BY REF.NO.023	0	0
002	08101-06305	BEARING BALL	2				0.23	0.506
003	66591-56460	COLLAR	1				0.049	0.1078
004	66591-56420	BUSH	1				0.021	0.0462
005	66591-56430	SEAL OIL	1				0.019	0.0418
006	31220-22340	NUT	1				0.033	0.0726
007	66704-81200	ASSY DIFF FRONT AXLE	1			REF.NO.001 008 TO 022	3.7	8.14
008	66711-56710	CASE DIFFERENTIAL	1				0	0
009	99999-99999	BLANK	0			ORDER BY REF.NO.023	0	0
010	66591-14830	SHAFT DIFF PINION	1				0.1	0.22
011	66591-14783	PIN STRAIGHT	1				0.01	0.022
012	66591-14790	PIN KNOCK	1				0.004	0.0088
013	66591-14840	GEAR DIFF PINION	2				0.082	0.1804
014	66591-14850	COLLAR THRUST	2				0.006	0.0132
015	66591-14870	GEAR DIFF SIDE	2				0.18	0.396
016	66591-14880	SHIM 1	1				0.008	0.0176
017	66591-14890	SHIM 2	1				0.01	0.022
018	66591-14910	PLATE LOCK	2				0.006	0.0132
019	01156-50820	BOLT	4				0.01	0.022
020	66591-14920	SHIM DIFF SIDE 1	1				0.006	0.0132
021	66591-14930	SHIM DIFF SIDE 2	1				0.002	0.0044
022	08101-06008	BEARING BALL	2				0.19	0.418
023	66711-82810	ASSY BEVEL GEAR 6-37	1			REF.NO.001 009	1.73	3.806

silverhorn.co.uk

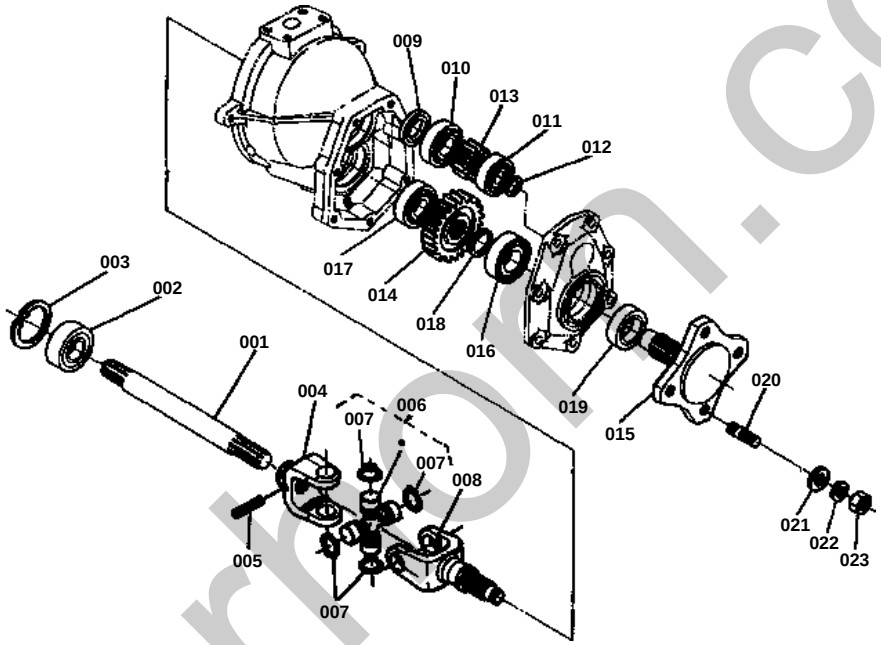

silverhorn.co.uk

FRONT AXLE JOINT [DP]

↔ Interchangeable; ≠ not interchangeable; ← new for old; → old for new

REF.No	Part No.	Description	Q'ty	S.No.	I/C	REMARKS	Weight (kgf)	Weight (lb)
001	66591-56513	SHAFT	2				0	0
002	09400-21528	SEAL OIL	2				0.019	0.0418
003	04611-00520	CIR-CLIP INTERNAL	2				0.009	0.0198
004	66711-56920	JOINT	2				0.428	0.9416
005	05411-00635	PIN SPRING	2				0.005	0.011
006	66716-31160	ASSY JOINT UNIVERSAL	2			REF.NO.007	0.32	0.704
007	66716-31170	CIR-CLIP EXTERNAL	8				0.002	0.0044
008	66711-56930	SHAFT JOINT	2				0.618	1.3596
009	09230-25405	SEAL OIL	2				0.001	0.0022
010	08101-06204	BEARING BALL	2				0.102	0.2244
011	08101-06303	BEARING BALL	2				0.112	0.2464
012	04612-00170	CIR-CLIP EXTERNAL	2				0.001	0.0022
013	66704-56950	GEAR SPUR 12	2				0.162	0.3564
014	66704-56960	GEAR SPUR 25	2				0.58	1.276
015	66591-56555	HUB FRONT WHEEL	2				0.85	1.87
016	08101-06206	BEARING BALL	2				0.196	0.4312
017	08101-06205	BEARING BALL	2				0.14	0.308
018	04612-00290	CIR-CLIP EXTERNAL	2				0.003	0.0066
019	63733-17150	SEAL OIL	2				0.04	0.088
020	66591-56564	STUD	8				0.028	0.0616
021	04013-50120	WASHER PLAIN	8				0	0
022	04512-50120	WASHER SPRING	8				0	0
023	02174-50120	NUT	8				0.01	0.022

silverhorn.co.uk

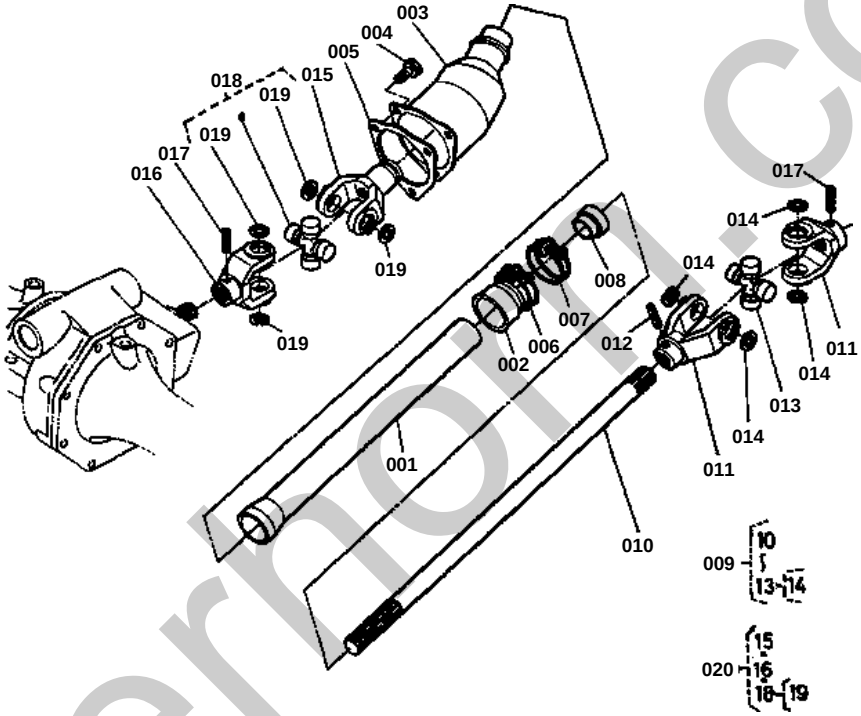

silvermoll.co.uk

↔ Interchangeable; ≠ not interchangeable; ← new for old; → old for new

REF.No	Part No.	Description	Q'ty	S.No.	I/C	REMARKS	Weight (kgf)	Weight (lb)
001	66591-57164	PIPE 2	1				0.429	0.9438
002	66591-57170	PIPE 3	1				0.046	0.1012
003	67221-57110	CASE JOINT	1				0.56	1.232
004	01120-50835	BOLT	3				0	0
005	66591-57220	GASKET	1				0	0
006	66591-57190	BAND 3	1				0.029	0.0638
007	66591-57150	BAND 1	1				0	0
007	67221-57120	BAND 1	1				0	0
007	15108-72870	BAND 1	1	>=10001			0.027	0.0594
008	67121-57150	SEAL OIL	1				0.018	0.0396
009	66711-57200	ASSY DRIVER SHAFT	1			REF.NO.010 TO 013	2.045	4.499
010	66711-57210	SHAFT DRIVER	1				1.32	2.904
011	66591-56410	JOINT 1	2				0.252	0.5544
012	05411-00628	PIN SPRING	1				0.004	0.0088
013	66591-56320	ASSY JOINT UNIVERSAL	1			REF.NO.014	0.185	0.407
014	04611-00200	CIR-CLIP INTERNAL	4				0.001	0.0022
015	66591-56340	JOINT 2	1				0.338	0.7436
016	66591-56410	JOINT 1	1				0.252	0.5544
017	05411-00628	PIN SPRING	2				0.004	0.0088
018	66591-56320	ASSY JOINT UNIVERSAL	1			REF.NO.019	0.185	0.407
019	04611-00200	CIR-CLIP INTERNAL	4				0.001	0.0022
020	67121-57250	ASSY JOINT FRONT	1			REF.NO.015 016 AND 018	0.77	1.694

silverhorn.co.uk

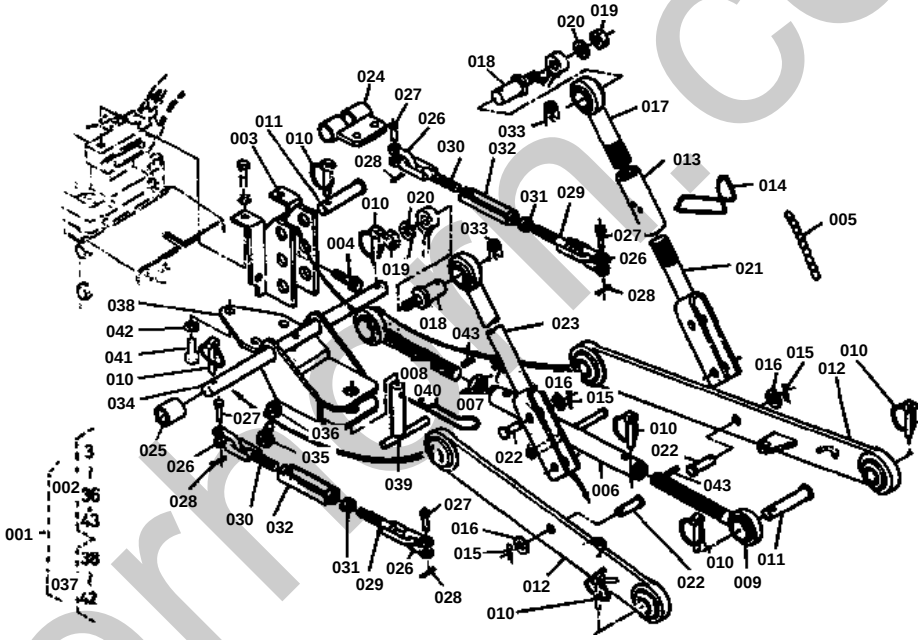

silverfern.co.uk

↔ Interchangeable; ≠ not interchangeable; ← new for old; → old for new

REF.No	Part No.	Description	Q'ty	S.No.	I/C	REMARKS	Weight (kgf)	Weight (lb)
001	66204-65100	ASSY 3-P.LINK HITCH	1			REF.NO.002 037	28	61.6
002	66204-65200	ASSY LINK 3-POINT	1			REF.NO.003 TO 036 AND 043	22	48.4
003	96316-06110	BRACKET	1				1.22	2.684
004	01123-51230	BOLT	2				0.04	0.088
005	66616-34550	CHAIN	1				0.66	1.452
006	66706-65330	LINK TOP	1				0	0
007	66706-65340	NUT TOP LINK	1				0.05	0.11
008	66706-65360	JOINT TOP LINK RH	1				0	0
009	66706-65350	JOINT TOP LINK LH	1				0	0
010	34150-37640	PIN SET	7				0.06	0.132
011	31150-71360	PIN JOINT	2				0.166	0.3652
012	66706-65212	LINK LOWER	2				0	0
013	66706-65250	NUT	1				0	0
014	66706-65260	SPRING	1				0.041	0.0902
015	05511-50425	PIN SPLIT	3				0.003	0.0066
016	04013-50120	WASHER PLAIN	3				0	0
017	66706-65232	ROD LIFT RH	1				0.315	0.693
018	66706-65280	PIN	2				0.082	0.1804
019	02174-50120	NUT	2				0.01	0.022
020	04512-50120	WASHER SPRING	2				0	0
021	66706-65240	ROD LIFT LH	1				0.5	1.1
022	05122-51240	PIN JOINT	3				0.039	0.0858
023	66706-65272	ROD LIFT LOWER	1				0.9	1.98
024	66204-65290	BRACKET	1				0	0
025	66204-65350	SPACER	2				0.12	0.264
026	66706-65370	JOINT CHAIN	4				0.07	0.154
027	66706-65380	PIN	4				0.021	0.0462
028	05511-50318	PIN SPLIT	4				0.001	0.0022
029	66706-65310	TURN BACKLE BOLT RH	2				0.153	0.3366
030	66706-65320	TURN BACKLE BOLT LH	2				0.153	0.3366
031	02112-50120	NUT	2				0.007	0.0154
032	96316-05580	TURN BACKLE	2				0.14	0.308
033	66713-34340	PIN SNAP	2				0.013	0.0286
034	66704-86110	PIN LOWER LINK	1				1.19	2.618
035	66204-65120	BOLT SET	1				0.055	0.121
036	02174-50140	NUT	1				0.014	0.0308
037	66204-65500	ASSY HITCH	1			REF.NO.038 TO 042	0	0
038	66204-65600	HITCH	1				0	0
039	66204-65610	PIN HITCH	1				0	0
040	31150-29730	PIN SNAP	1				0.044	0.0968
041	01150-51235	BOLT	3				0	0
042	04512-50120	WASHER SPRING	3				0	0
043	05411-00422	PIN SPRING	2				0.001	0.0022

silverhorn.co.uk

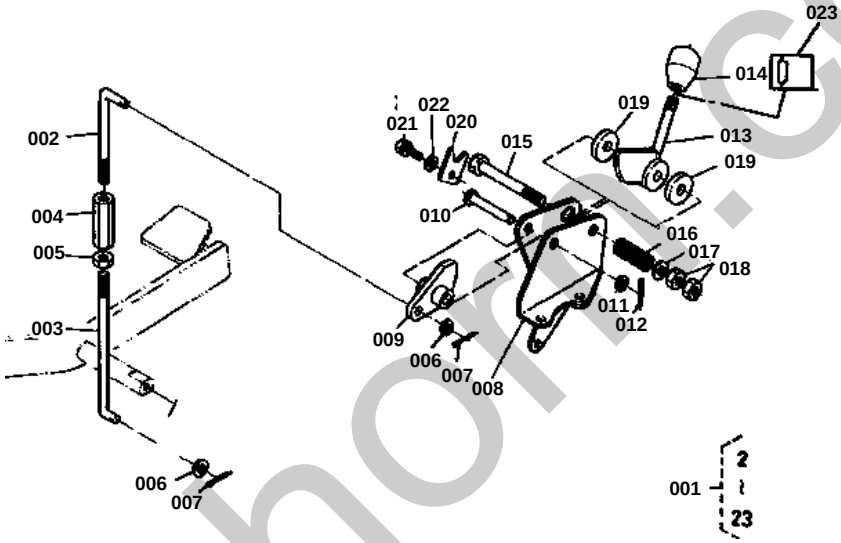

silverhorn.co.uk

SPEED CHANGE 2 [OPTION]

↔ Interchangeable; ≠ not interchangeable; ← new for old; → old for new

REF.No	Part No.	Description	Q'ty	S.No.	I/C	REMARKS	Weight (kgf)	Weight (lb)
001	66104-84340	KIT SPEED CHANGE	1			REF.NO.002 TO 023	1.233	2.7126
002	66204-43430	ROD CHECK A	1				0.04	0.088
003	66204-43440	ROD CHECK B	1				0.13	0.286
004	66591-42410	TURN BACKLE	1				0.046	0.1012
005	02112-50080	NUT	1				0.003	0.0066
006	04012-50080	WASHER PLAIN	2				0.001	0.0022
007	05511-50215	PIN SPLIT	2				0.001	0.0022
008	66204-43450	PLATE CHECK	1				0.47	1.034
009	66204-43460	PLATE CHECK	1				0.105	0.231
010	05122-51045	PIN JOINT	1				0	0
011	04013-50100	WASHER PLAIN	1				0	0
012	05511-50318	PIN SPLIT	1				0.001	0.0022
013	66204-43470	LEVER	1				0.19	0.418
014	63763-42260	GRIP	1				0.021	0.0462
015	66204-43480	BOLT	1				0.06	0.132
016	66204-43510	SPRING	1				0.02	0.044
017	04013-50100	WASHER PLAIN	1				0	0
018	02116-50100	NUT	2				0.004	0.0088
019	66204-43490	PLATE	2				0.004	0.0088
020	66204-43520	STOPPER	1				0.03	0.066
021	01023-50610	BOLT	1				0.005	0.011
022	04013-50060	WASHER PLAIN	1				0	0
023	66204-47510	LABEL	1				0.045	0.099

silverhorn.co.uk

IMAGE NOT AVAILABLE

silverhorn.co.uk

↔ Interchangeable; ≠ not interchangeable; ← new for old; → old for new

REF.No	Part No.	Description	Q'ty	S.No.	I/C	REMARKS	Weight (kgf)	Weight (lb)
001	66104-61200	ASSY TOOLS	1				0.6	1.32
002	15241-86610	WRENCH FILTER	1				0.133	0.2926
003	66204-62912	MANUAL INSTRUCTION	1	<=10740			0	0
003	66204-62917	MANUAL INSTRUCTION	1	>=10001			0	0
004	66104-62920	PARTS LIST	1				0	0

silverhorn.co.uk