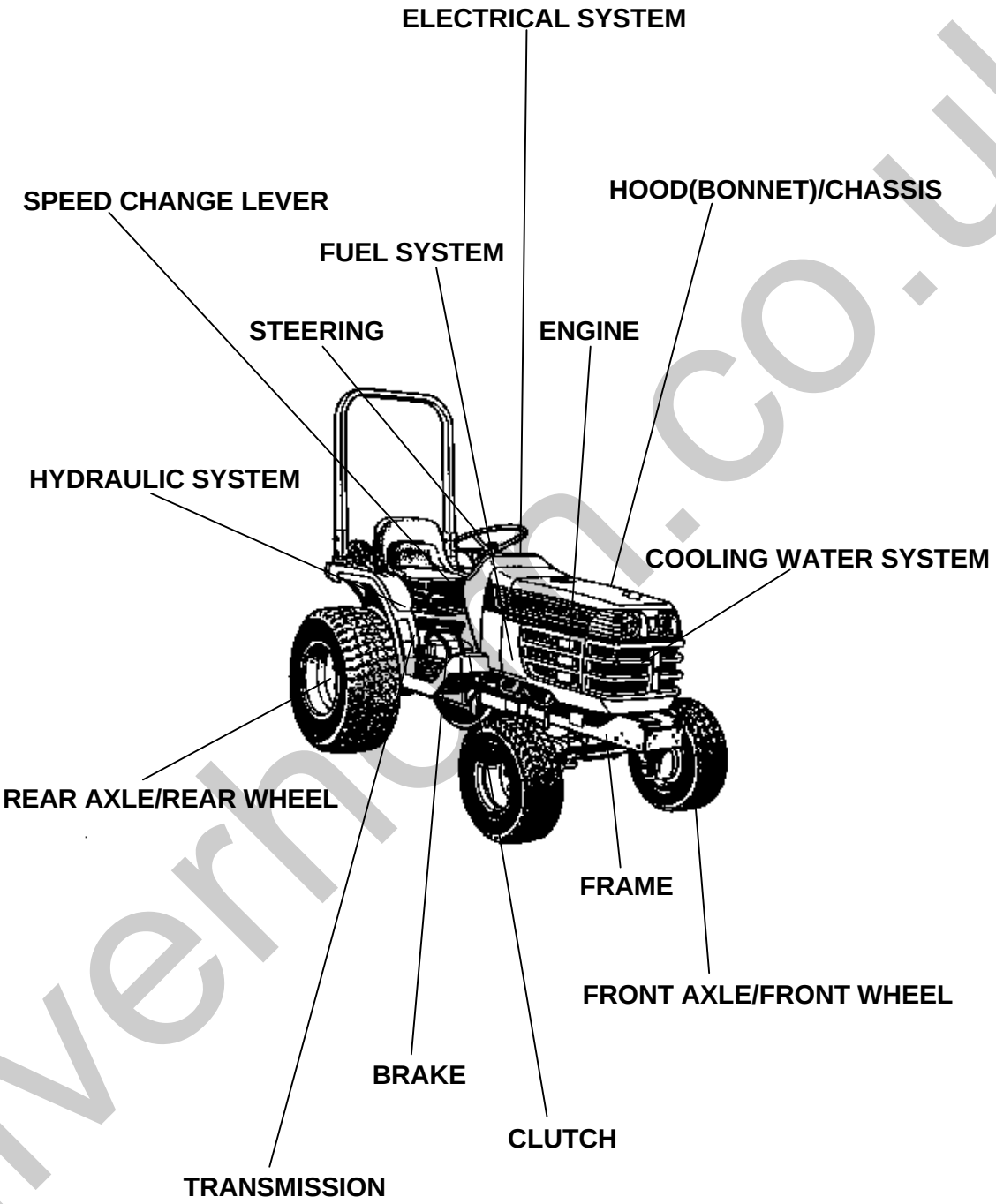

LABELS

ACCESSORIES

silverhorn.co.uk

Item	Part No.	Description	Book
ENGINE	01T001	CRANKCASE	100K0314
	01T002	OIL PAN	100K0314
	01T003	PISTON/CRANKSHAFT	100K0314
	01T004	MAIN BEARING CASE	100K0314
	01T005	FLYWHEEL	100K0314
	01T006	CYLINDER HEAD	100K0314
	01T007	VALVE AND ROCKER ARM	100K0314
	01T008	NOZZLE HOLDER AND GLOW PLUG	100K0314
	01T009	NOZZLE HOLDER [COMPONENT PARTS]	100K0314
	01T010	HEAD COVER	100K0314
	01T011	INLET MANIFOLD	100K0314
	01T013	EXHAUST MANIFOLD	100K0314
	01T015	CAMSHAFT	100K0314
	01T016	GEAR CASE	100K0314
	01T017	WATER PUMP	100K0314
	01T018	WATER FLANGE/THERMOSTAT	100K0314
	01T019	INJECTION PUMP	100K0314
	01T020	INJECTION PUMP [COMPONENT PARTS]	100K0314
	01T021	SPEED CONTROL PLATE	100K0314
	01T022	GOVERNOR	100K0314
	01T023	FUEL PUMP	100K0314
	01T024	LOWER GASKET KIT	100K0314
	01T025	UPPER GASKET KIT	100K0314
ELECTRICAL SYSTEM	01T034	DYNAMO	100K0314
	01T035	DYNAMO [COMPONENT PARTS]	100K0314
CLUTCH	01T044	CLUTCH	100K0314
HYDRAULIC SYSTEM	01T083	HYDRAULIC GEAR PUMP	100K0314
	01T084	HYDRAULIC GEAR PUMP [COMPONENT PARTS]	100K0314
ENGINE	02T012	AIR CLEANER	100K0314
	02T014	MUFFLER	100K0314
	02T026	ACCELERATOR LEVER	100K0314
FUEL SYSTEM	02T027	FUEL TANK	100K0314
	02T028	FUEL PIPE	100K0314
	02T029	FUEL FILTER [COMPONENT PARTS]	100K0314
COOLING WATER SYSTEM	02T030	WATER PIPE	100K0314
	02T031	RADIATOR	100K0314
	02T032	RESERVE TANK	100K0314
	02T033	FAN	100K0314
ELECTRICAL SYSTEM	02T036	STARTER	100K0314
	02T037	STARTER [COMPONENT PARTS]	100K0314
	02T038	BATTERY	100K0314
	02T039	HEAD LIGHT	100K0314
	02T040	HAZARD LIGHT/TAIL LIGHT	100K0314
	02T041	METER/SWITCH	100K0314
	02T04102	METER KIT	100K0314
	02T042	METER [COMPONENT PARTS]	100K0314
	02T043	WIRE HARNESS	100K0314
CLUTCH	02T045	CLUTCH ROD	100K0314
	02T046	CLUTCH PEDAL	100K0314
	02T047	CLUTCH HOUSING	100K0314
TRANSMISSION	02T048	CLUTCH SHAFT/PROPELLER SHAFT	100K0314
	02T049	TRANSMISSION CASE	100K0314
	02T050	DIFFERENTIAL GEAR CASE	100K0314
	02T051	HST	100K0314
	02T052	HST [COMPONENT PARTS]	100K0314
	02T053	2ND/3RD/4TH SHAFT	100K0314
	02T054	5TH SHAFT/PTO SHAFT	100K0314

silverfarm.co.uk

Item	Part No.	Description	Book
TRANSMISSION	02T055	FRONT WHEEL DRIVE SHAFT	100K0314
	02T056	MID PTO	100K0314
SPEED CHANGE LEVER	02T057	SPEED CHANGE LEVER	100K0314
	02T058	SPEED CONTROL PEDAL	100K0314
	02T059	SPEED SET LEVER	100K0314
	02T060	RANGE GEAR SHIFT LEVER	100K0314
	02T061	PTO GEAR SHIFT LEVER	100K0314
	02T062	FRONT WHEEL DRIVE LEVER	100K0314
	02T063	REAR DIFFERENTIAL	100K0314
	02T064	DIFFERENTIAL LOCK PEDAL	100K0314
REAR AXLE/REAR WHEEL	02T065	REAR AXLE CASE	100K0314
	02T066	REAR AXLE	100K0314
	02T06701	REAR WHEEL (29 X 12.5-15)	100K0314
	02T06702	REAR WHEEL (8.3-16)	100K0314
	02T06703	REAR WHEEL (31 X 15.5-15)	100K0314
BRAKE	02T068	BRAKE	100K0314
	02T069	BRAKE PEDAL	100K0314
	02T070	PARKING BRAKE LEVER	100K0314
FRONT AXLE/FRONT WHEEL	02T071	FRONT DRIVE SHAFT	100K0314
	02T072	FRONT DIFFERENTIAL	100K0314
	02T073	FRONT AXLE CASE	100K0314
	02T074	FRONT BEVEL GEAR CASE	100K0314
	02T075	FRONT AXLE	100K0314
	02T07601	FRONT WHEEL (6-12)	100K0314
	02T07602	FRONT WHEEL (21 X 8.00-10)	100K0314
FRAME	02T077	FRAME	100K0314
STEERING	02T078	KNUCKLE ARM/TIE ROD	100K0314
	02T079	DRAG LINK	100K0314
	02T080	STEERING WHEEL	100K0314
	02T081	STEERING	100K0314
	02T082	STEERING [COMPONENT PARTS]	100K0314
HYDRAULIC SYSTEM	02T085	HYDRAULIC OIL LINE (OIL COOLER)	100K0314
	02T086	HYDRAULIC OIL LINE (T/M)	100K0314
	02T087	HYDRAULIC OIL LINE (SUCTION/DELIVERY)	100K0314
	02T088	FLOW DIVIDING VALVE [COMPONENT PARTS]	100K0314
	02T089	HYDRAULIC OIL LINE (HST)	100K0314
	02T090	OIL COOLER	100K0314
	02T091	HYDRAULIC CYLINDER CASE	100K0314
	02T092	CONTROL VALVE	100K0314
	02T093	CONTROL VALVE [COMPONENT PARTS]	100K0314
	02T094	HYDRAULIC CONTROL LEVER	100K0314
	02T095	TOP LINK	100K0314
	02T096	LOWER LINK	100K0314
	02T097	LIFT ROD	100K0314
HOOD(BONNET)/CHASSIS	02T098	HOOD (BONNET)	100K0314
	02T099	FRONT GRILLE	100K0314
	02T100	SIDE COVER	100K0314
	02T101	FENDER LH	100K0314
	02T102	FENDER RH	100K0314
	02T103	SEAT STAY	100K0314
	02T104	SEAT	100K0314
	02T105	STEP	100K0314
	02T106	ROPS	100K0314
LABELS	02T107	LABEL	100K0314
ACCESSORIES	02T108	ACCESSORIES AND SERVICE PARTS	100K0314

silverfarm.co.uk

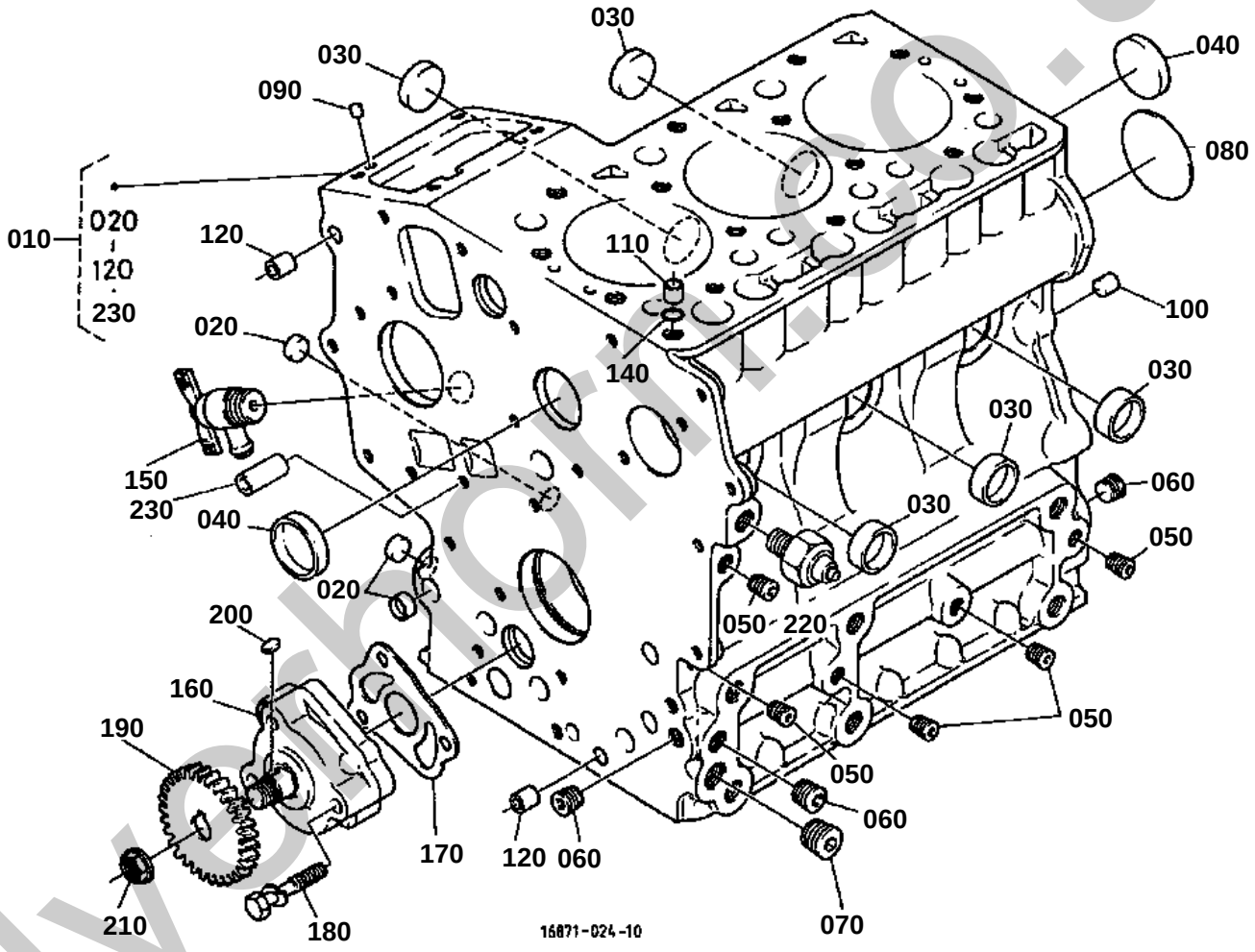

silvershorts.co.uk

CRANKCASE

↔ Interchangeable; ≠ not interchangeable; ← new for old; → old for new

REF.No	Part No.	Description	Q'ty	S.No.	I/C	REMARKS	Weight (kgf)	Weight (lb)
010	16813-01010	COMP.CRANKCASE	1				22	48.4
020	16851-96260	CAP SEALING	3				0.005	0.011
030	16851-96270	CAP SEALING	5				0.005	0.011
040	15451-96270	CAP SEALING	2				0.012	0.0264
050	15261-96010	PLUG	5				0.002	0.0044
060	15521-96020	PLUG	3				0.003	0.0066
070	15521-96030	PLUG	1				0.007	0.0154
080	15261-96160	PLUG EXPANSION	1				0.02	0.044
090	05012-00508	PIN STRAIGHT	2				0.001	0.0022
100	05012-00820	PIN STRAIGHT	2				0.008	0.0176
110	15221-33650	PIN PIPE	1				0.004	0.0088
120	15231-33960	PIN PIPE	2				0.001	0.0022
140	15221-33700	O RING	1				0.001	0.0022
150	15841-73020	ASSY COCK DRAIN	1				0.03	0.066
160	16851-35010	ASSY PUMP OIL	1				0.24	0.528
170	16851-35152	GASKET	1				0.001	0.0022
180	15841-91050	BOLT	3				0.01	0.022
190	15841-35660	GEAR OIL PUMP DRIVE	1				0.113	0.2486
200	05712-00408	KEY FEATHER	1				0.001	0.0022
210	02783-50100	NUT FLANGE	1				0.01	0.022
220	15531-39010	SWITCH OIL	1				0.032	0.0704
230	17331-59190	PIN PIPE	2				0.02	0.044

silverhorn.co.uk

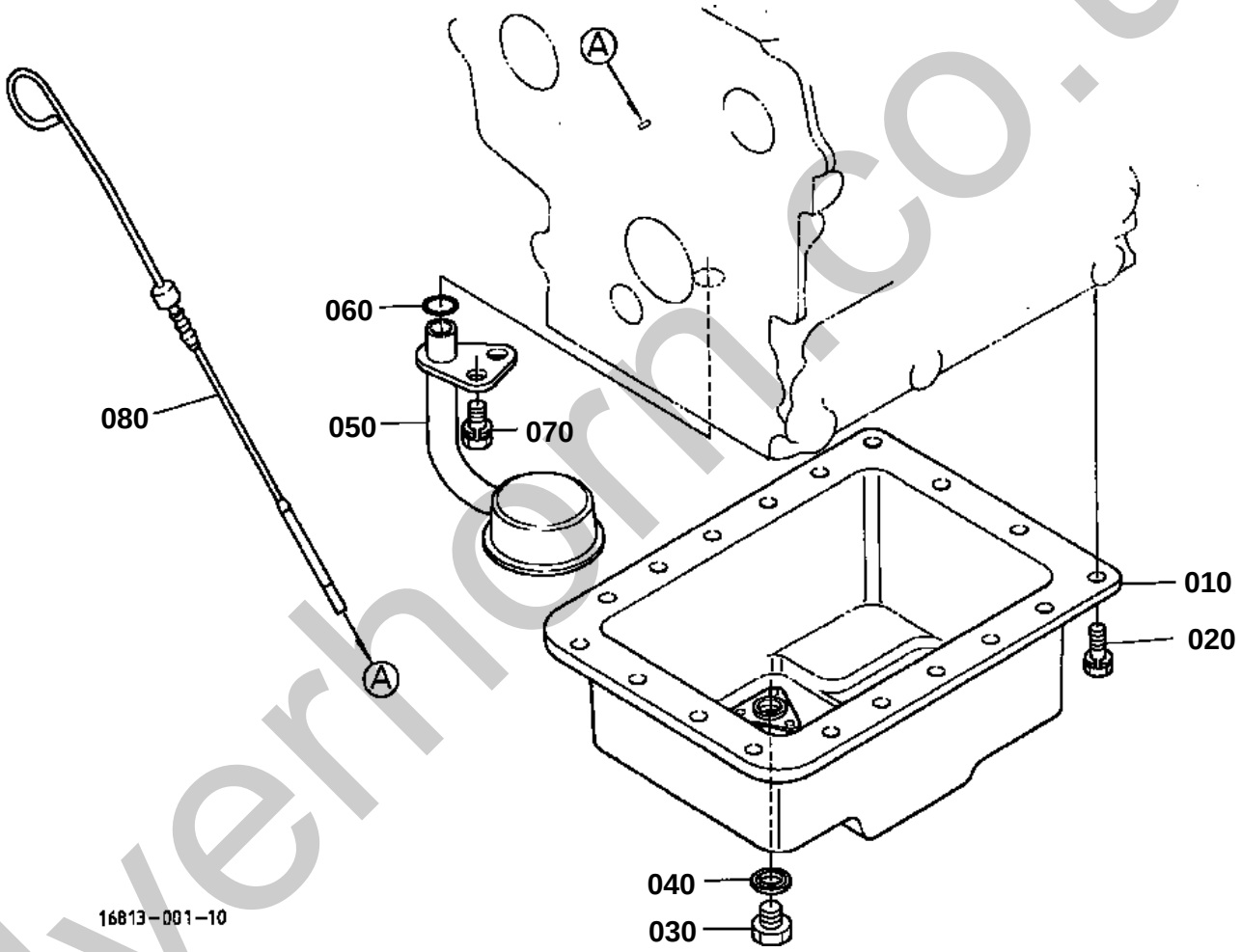

silverhorn.co.uk

OIL PAN

↔ Interchangeable; ≠ not interchangeable; ← new for old; → old for new

REF.No	Part No.	Description	Q'ty	S.No.	I/C	REMARKS	Weight (kgf)	Weight (lb)
010	6C090-58920	COMP.OIL PAN	1	<=WQ5250			0	0
010	6C090-58924	COMP.OIL PAN	1	>=WS0001	←		0.75	1.65
020	01023-50612	BOLT	18				0.005	0.011
030	15221-33750	PLUG	1				0.032	0.0704
040	6C090-58960	GASKET	1				0.002	0.0044
050	16813-32110	FILTER OIL	1				0.11	0.242
060	04811-00160	O RING	1	<=WG4000			0.001	0.0022
060	04814-00160	RING	1	>=WJ0001	←		0.001	0.0022
070	01123-60814	BOLT	1				0.008	0.0176
080	16853-36410	GAUGE OIL	1				0.045	0.099

silverhorn.co.uk

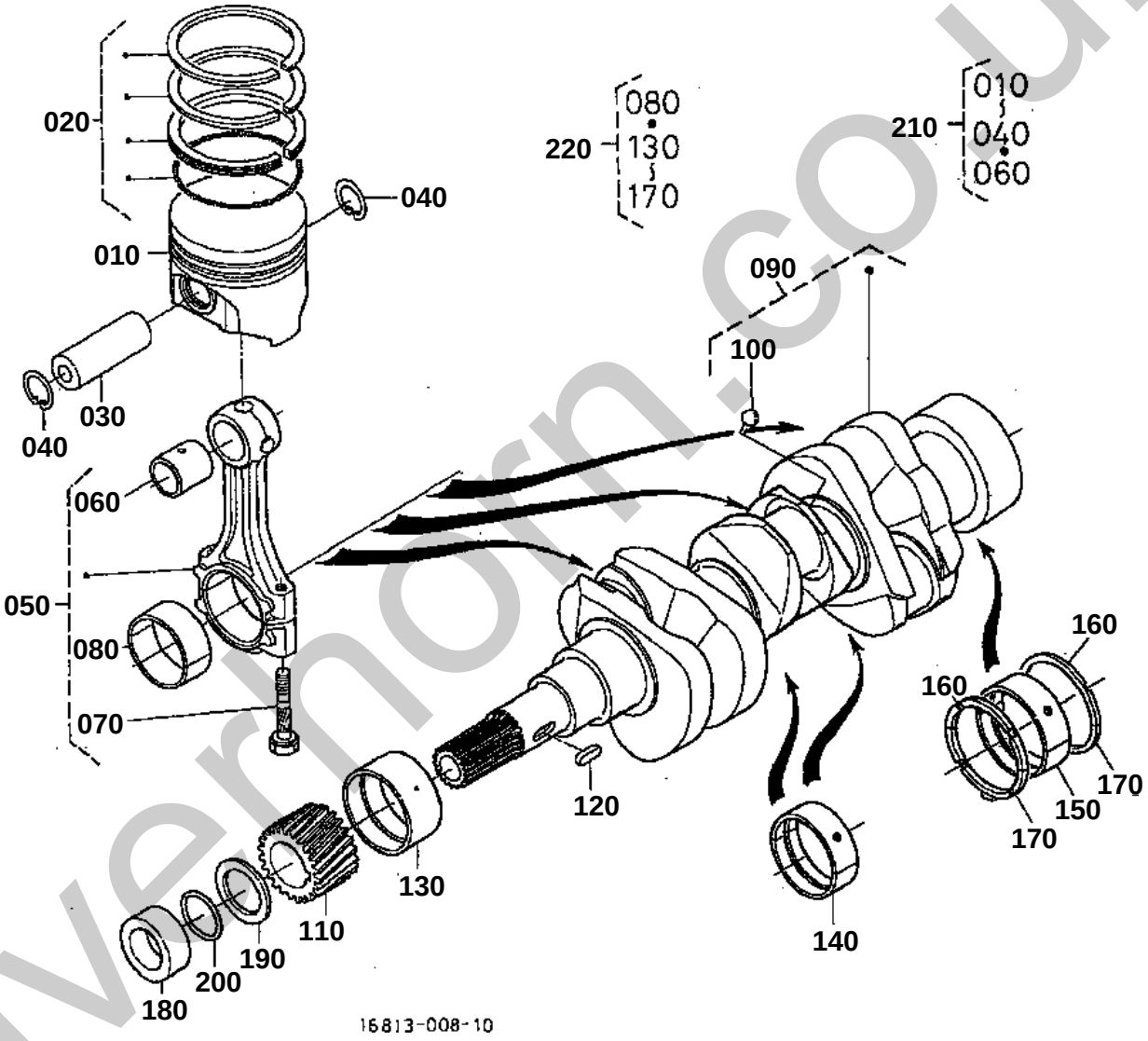

silvernorn.co.uk

PISTON/CRANKSHAFT

↔ Interchangeable; ≠ not interchangeable; ← new for old; → old for new

REF.No	Part No.	Description	Q'ty	S.No.	I/C	REMARKS	Weight (kgf)	Weight (lb)
010	16851-21112	PISTON	3			STD	0.23	0.506
010	16851-21900	PISTON	3			+0.25mm	0.26	0.572
020	16853-21050	ASSY PISTON RING	3			STD	0.04	0.088
020	16851-21093	ASSY PISTON RING	3			+0.25mm	0.03	0.066
030	16851-21310	PIN PISTON	3				0.1	0.22
040	15261-21330	CIRCLIP PISTON PIN	6				0.001	0.0022
050	16851-22010	ASSY CONNECTING ROD	3				0.47	1.034
060	16851-21980	BUSH PISTON PIN	3				0.01	0.022
070	16851-22140	BOLT CONNECTING ROD	6				0.012	0.0264
080	16851-22320	METAL CRANKPIN M	3			STD SET	0.04	0.088
080	15861-22970	METAL CRANKPIN	3			-0.2mm SET	0.03	0.066
080	15861-22980	METAL CRANKPIN	3			-0.4mm SET	0.03	0.066
090	16861-23010	COMP.CRANKSHAFT	1				5.56	12.232
100	07715-03207	BALL	3				0.001	0.0022
110	16864-24110	GEAR CRANKSHAFT	1				0.08	0.176
120	05712-00515	KEY FEATHER	1				0.003	0.0066
130	15861-23470	METAL CRANKSHAFT	1			STD	0.03	0.066
130	15861-23910	METAL CRANKSHAFT	1			-0.2mm	0.04	0.088
130	15861-23920	METAL CRANKSHAFT	1			-0.4mm	0.04	0.088
140	16861-23490	METAL CRANKSHAFT M	2			STD SET	0.02	0.044
140	15861-23860	METAL CRANKSHAFT	2			-0.2mm SET	0.03	0.066
140	15861-23870	METAL CRANKSHAFT	2			-0.4mm SET	0.03	0.066
150	16861-23480	METAL CRANKSHAFT M	1			STD SET	0.03	0.066
150	15694-23930	METAL CRANKSHAFT	1			-0.2mm SET	0.05	0.11
150	15694-23940	METAL CRANKSHAFT	1			-0.4mm SET	0.046	0.1012
160	15261-23530	METAL SIDE	2			STD	0.006	0.0132
160	15261-23950	METAL SIDE	2			+0.2mm	0.006	0.0132
160	15261-23960	METAL SIDE	2			+0.4mm	0.007	0.0154
170	15261-23540	METAL SIDE	2			STD	0.007	0.0154
170	15261-23970	METAL SIDE	2			+0.2mm	0.006	0.0132
170	15261-23980	METAL SIDE	2			+0.4mm	0.007	0.0154
180	15841-23250	COLLAR CRANKSHAFT	1				0.05	0.11
190	15881-23310	SLINGER OIL	1				0.004	0.0088
200	04811-16220	O RING	1	<=WG4000			0.001	0.0022
200	04814-16220	O RING	1	>=WJ0001	←		0.001	0.0022
210	07916-28460	KIT PISTON-RING	3			STD	0.38	0.836
210	07916-28470	KIT PISTON-RING	3			+0.25mm	0.1	0.22
220	07916-28210	KIT METAL ENGINE	1			STD	0.22	0.484
220	07916-28860	KIT METAL ENGINE	1			-0.2mm/+0.2mm	0.217	0.4774
220	07916-28870	KIT METAL ENGINE	1			-0.4mm/+0.4mm	0.217	0.4774

silvermorn.co.uk

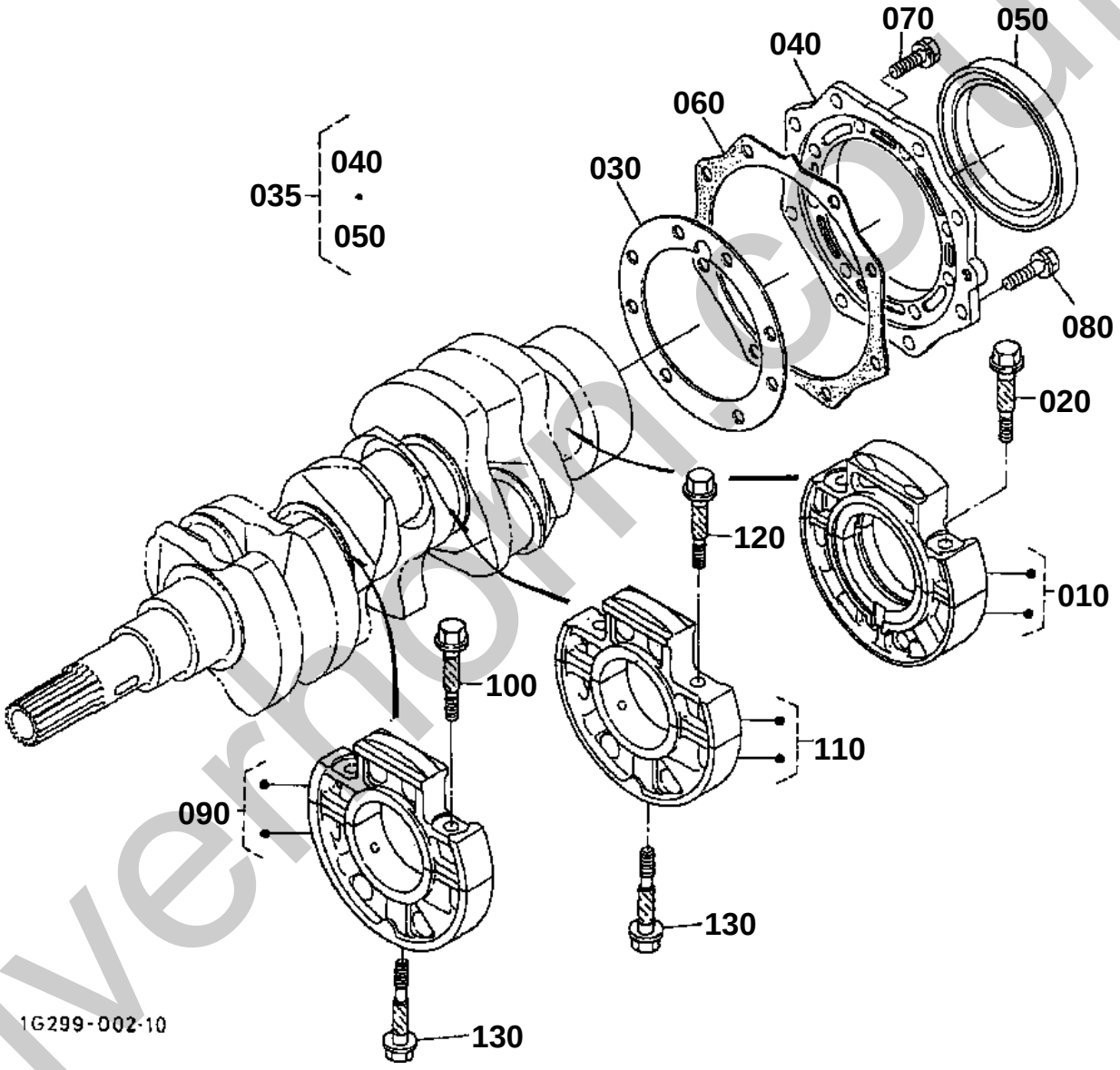

silverhorn.co.uk

MAIN BEARING CASE

↔ Interchangeable; ≠ not interchangeable; ← new for old; → old for new

REF.No	Part No.	Description	Q'ty	S.No.	I/C	REMARKS	Weight (kgf)	Weight (lb)
010	16851-04092	ASSY CASE MAIN BRG.	1				0.71	1.562
020	15841-04540	BOLT BEARING CASE	2				0.012	0.0264
030	15852-04360	GASKET BEARING CASE	1				0.005	0.011
035	15841-04800	ASSY COVER BRG.CASE	1				0.177	0.3894
040	15841-04810	COVER BEARING CASE	1				0.16	0.352
050	09560-00007	SEAL OIL	1				0.029	0.0638
060	15841-04822	GASKET	1				0.004	0.0088
070	01023-50620	BOLT	8				0.006	0.0132
080	01023-50622	BOLT	8				0.005	0.011
090	16851-04040	ASSY CASE MAIN BRG.	1				0.58	1.276
100	15841-04540	BOLT BEARING CASE	2				0.012	0.0264
110	16861-04050	ASSY CASE MAIN BRG.	1				0.58	1.276
120	15841-04540	BOLT BEARING CASE	2				0.012	0.0264
130	15841-04562	BOLT BEARING CASE	2				0.02	0.044

silverhorn.co.uk

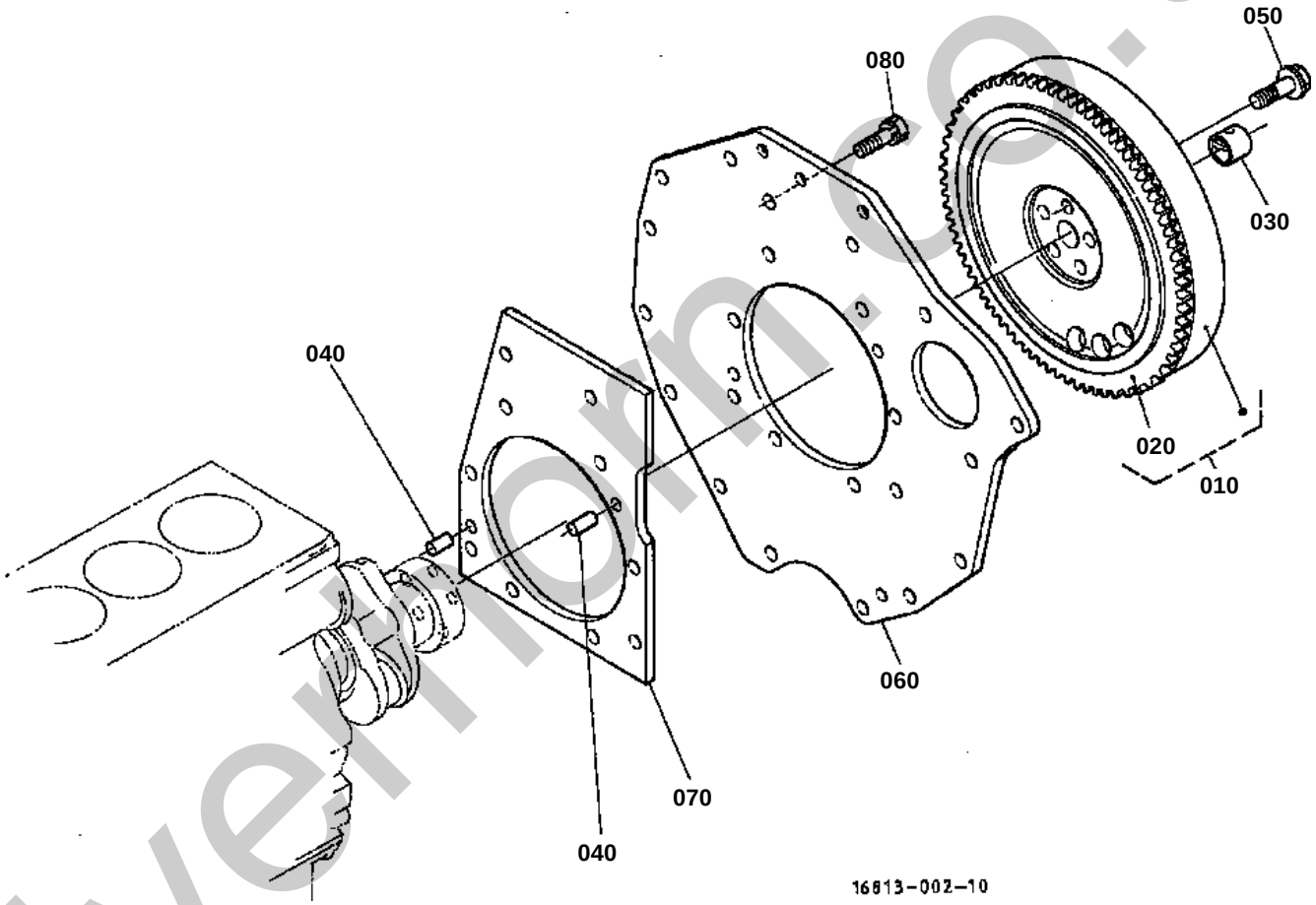

silverthorn.co.uk

FLYWHEEL

↔ Interchangeable; ≠ not interchangeable; ← new for old; → old for new

REF.No	Part No.	Description	Q'ty	S.No.	I/C	REMARKS	Weight (kgf)	Weight (lb)
010	16813-25010	COMP.FLYWHEEL	1				11.5	25.3
020	15262-63820	GEAR RING	1	<=801762			0.65	1.43
020	16813-63820	GEAR RING	1	>=801763	←		0.62	1.364
030	66621-14120	BEARING DRY	1				0.006	0.0132
040	05012-00816	PIN STRAIGHT	2				0.007	0.0154
050	15533-25162	BOLT FLYWHEEL	5				0.03	0.066
060	6C090-58910	PLATE END	1				4	8.8
070	6C090-58940	PLATE REAR END	1				1	2.2
080	01123-50825	BOLT	10				0.013	0.0286

silverhorn.co.uk

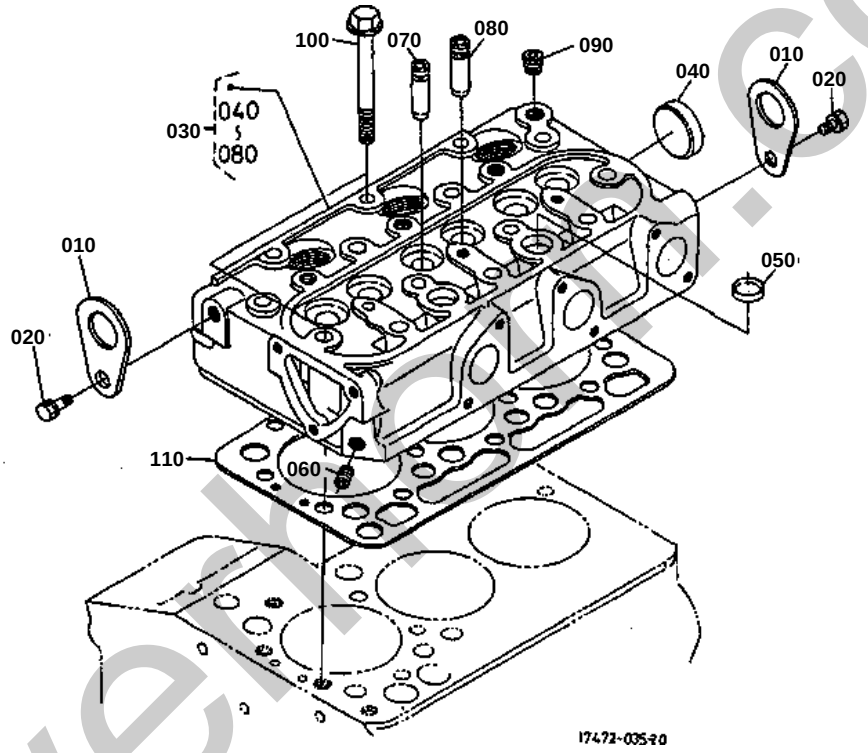

silverhill.co.uk

CYLINDER HEAD

↔ Interchangeable; ≠ not interchangeable; ← new for old; → old for new

REF.No	Part No.	Description	Q'ty	S.No.	I/C	REMARKS	Weight (kgf)	Weight (lb)
010	15841-01750	HOOK ENGINE	2	<=825650			0	0
010	15221-01750	HOOK ENGINE	2	>=825651	↔		0.04	0.088
020	01123-60814	BOLT	2	<=825650			0.008	0.0176
020	01123-60816	BOLT	2	>=825651	↔		0.01	0.022
030	17575-03042	COMP.CYLINDER HEAD	1				7.3	16.06
040	15321-96260	CAP SEALING	1				0.014	0.0308
050	15261-03370	CAP SEALING	2				0.005	0.011
060	15261-96010	PLUG	1				0.002	0.0044
070	15841-13540	GUIDE INLET VALVE	3				0.014	0.0308
080	15841-13560	GUIDE EXHAUST VALVE	3				0.014	0.0308
090	15841-96020	PLUG	1				0.003	0.0066
100	14601-03450	BOLT CYLINDER HEAD	14				0.035	0.077
110	16871-03310	GASKET CYLINDER HEAD	1				0.083	0.1826

silverhorn.co.uk

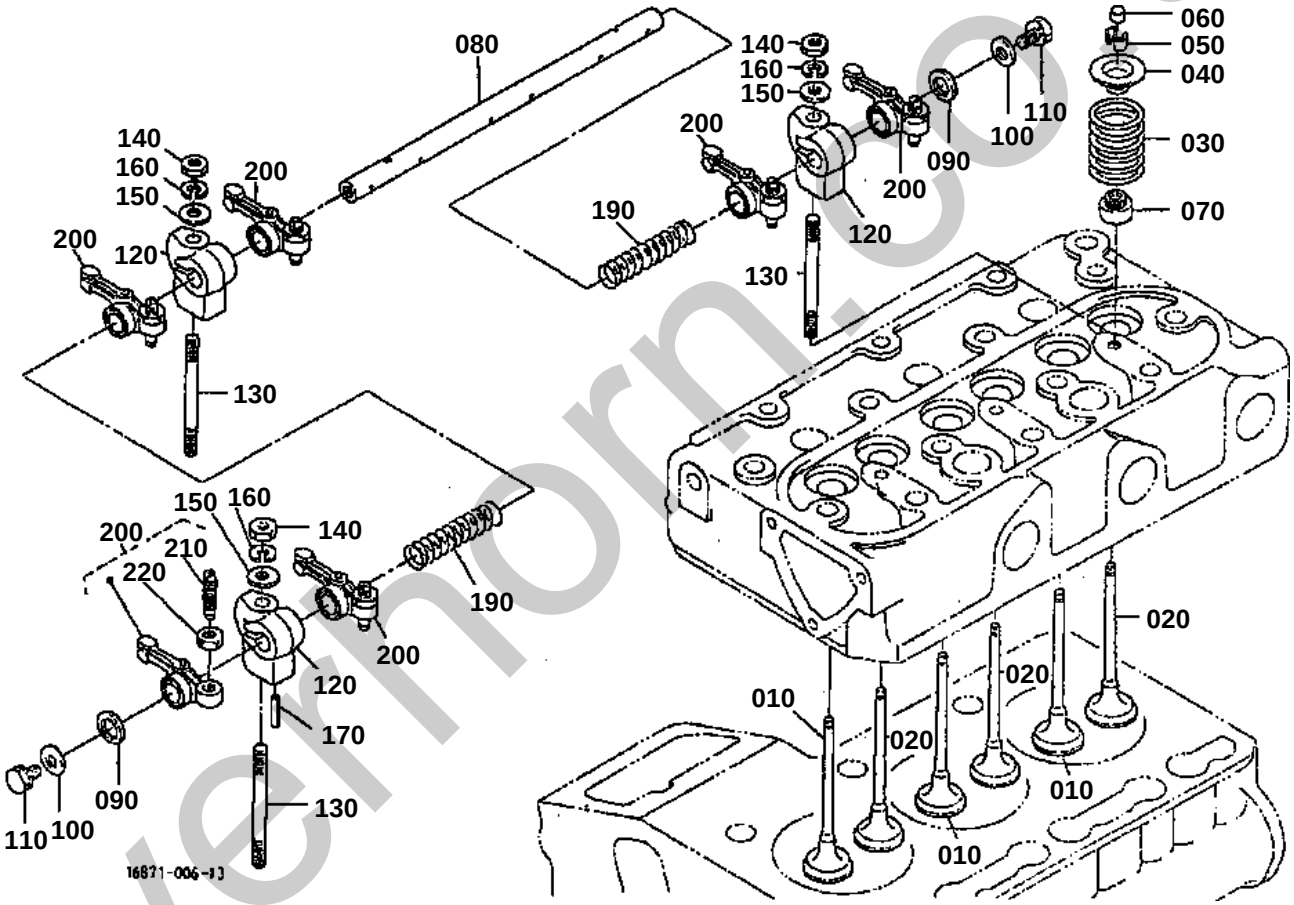

silverhorn.co.uk

VALVE AND ROCKER ARM

↔ Interchangeable; ≠ not interchangeable; ← new for old; → old for new

REF.No	Part No.	Description	Q'ty	S.No.	I/C	REMARKS	Weight (kgf)	Weight (lb)
010	14601-13110	VALVE INLET	3				0.03	0.066
020	14601-13120	VALVE EXHAUST	3				0.028	0.0616
030	14601-13240	SPRING VALVE	6				0.015	0.033
040	14601-13330	RETAINER SPRING	6				0.01	0.022
050	14601-13360	COLLET VALVE SPRING	6			SET	0.001	0.0022
060	16851-13280	CAP VALVE	6				0.005	0.011
070	15841-13150	SEAL VALVE STEM	6				0.015	0.033
080	15861-14263	SHAFT ROCKER ARM	1				0.094	0.2068
090	16871-14430	WASHER	2				0.002	0.0044
100	15841-94022	WASHER PLAIN	2				0.005	0.011
110	01023-50610	BOLT	2				0.005	0.011
120	15841-14350	BRACKET ROCKER ARM	3				0.026	0.0572
130	14601-14410	STUD	3				0.015	0.033
140	02056-50060	NUT	3				0.002	0.0044
150	04012-50060	WASHER PLAIN	3				0.001	0.0022
160	04512-60060	WASHER SPRING	3				0.001	0.0022
170	05411-00420	PIN SPRING	1				0.001	0.0022
190	14601-14310	SPRING ROCKER ARM	2				0.005	0.011
200	15841-14030	ASSY ROCKER ARM	6				0.04	0.088
210	15841-14230	SCREW ADJUSTING	6				0.003	0.0066
220	14601-14240	NUT	6				0.007	0.0154

silverhorn.co.uk

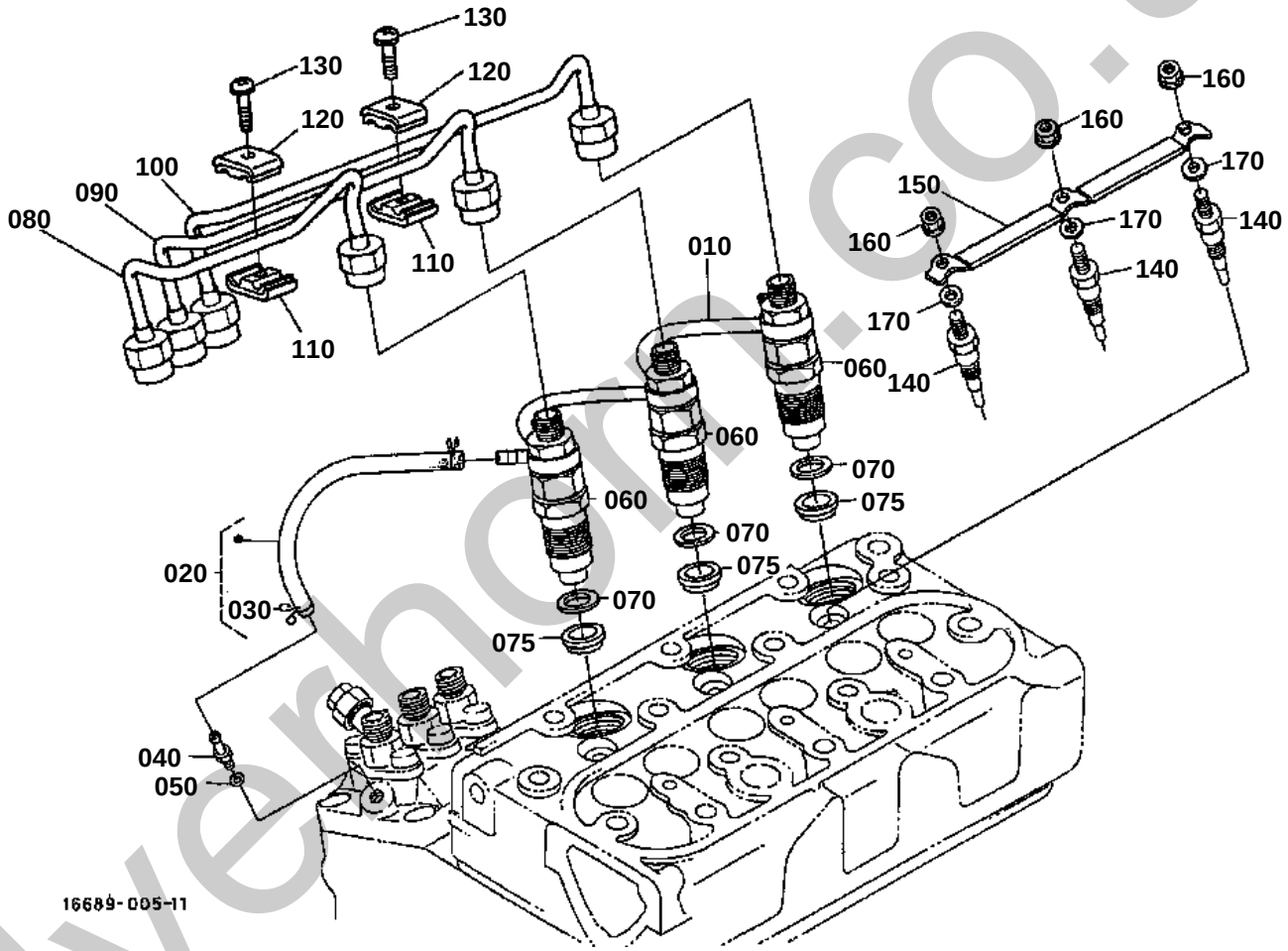

silverhorn.co.uk

NOZZLE HOLDER AND GLOW PLUG

↔ Interchangeable; ≠ not interchangeable; ← new for old; → old for new

REF.No	Part No.	Description	Q'ty	S.No.	I/C	REMARKS	Weight (kgf)	Weight (lb)
010	15862-42502	ASSY PIPE OVER FLOW	1				0.042	0.0924
020	15841-42500	ASSY PIPE OVER FLOW	1				0.015	0.033
030	14971-42750	CLIP PIPE	2				0.001	0.0022
040	15841-51360	SCREW AIR BREEDER	1				0.008	0.0176
050	15601-96650	GASKET	1				0.001	0.0022
060	16001-53000	ASSY HOLDER NOZZLE	3			REFER TO L.NO.0B05-R0 FOR COMPONENTS.	0.13	0.286
070	15841-53622	GASKET	3				0.002	0.0044
075	19077-53650	SEAL HEAT	3				0.005	0.011
080	16851-53712	PIPE INJECTION	1				0.1	0.22
090	16851-53722	PIPE INJECTION	1				0.1	0.22
100	16861-53732	PIPE INJECTION	1				0.1	0.22
110	15841-53850	CLAMP PIPE	2				0.01	0.022
120	15841-53860	CLAMP PIPE	2				0.009	0.0198
130	03024-50520	SCREW WITH WASHER	2				0.004	0.0088
140	16851-65510	GLOW PLUG	3				0.02	0.044
150	16861-65560	CORD GLOW PLUG	1				0.02	0.044
160	02761-50040	NUT FLANGE	3				0.002	0.0044
170	04013-60040	WASHER PLAIN	3				0.002	0.0044

silverhorn.co.uk

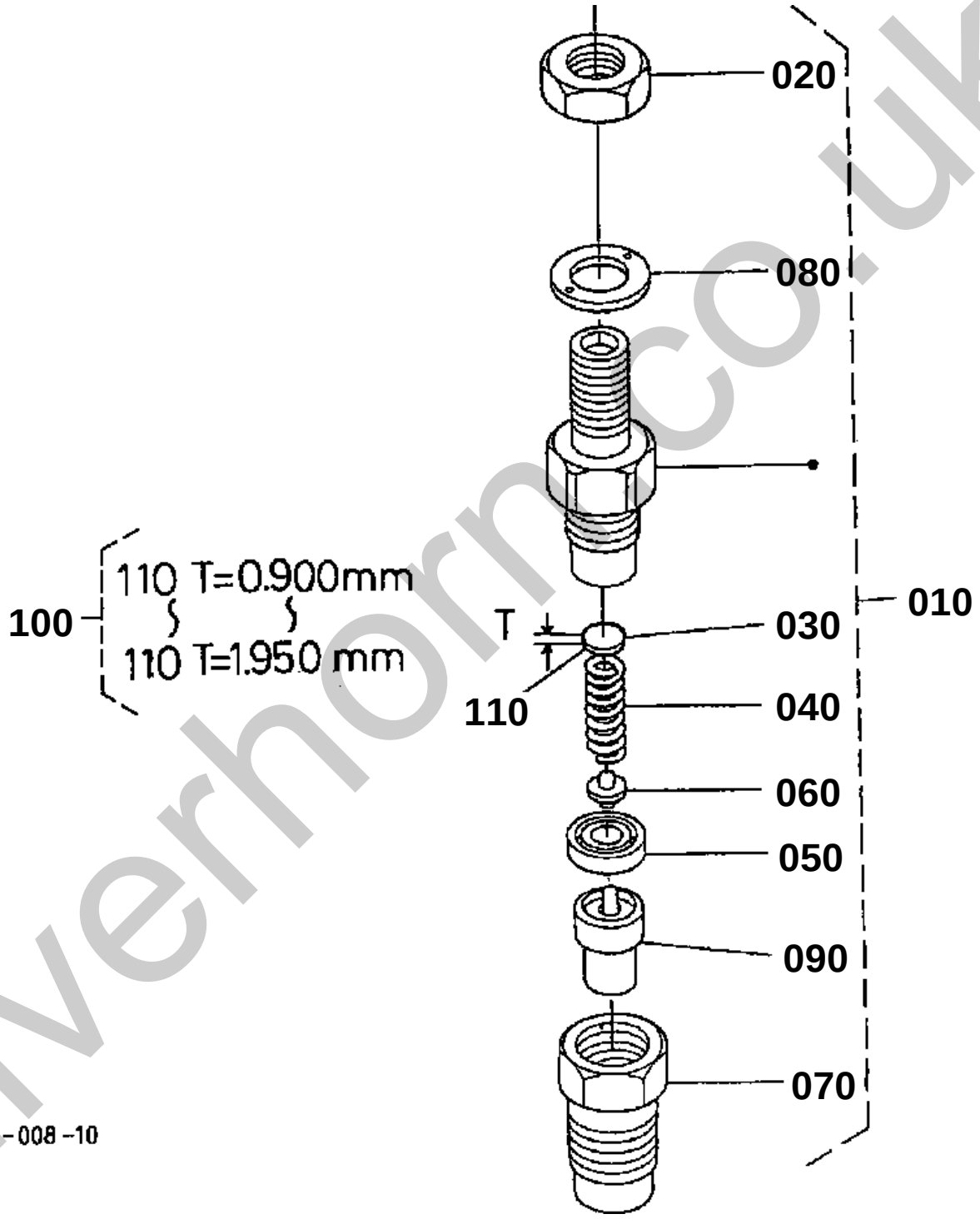

silverhorn.co.uk

NOZZLE HOLDER [COMPONENT PARTS]

↔ Interchangeable; ≠ not interchangeable; ← new for old; → old for new

REF.No	Part No.	Description	Q'ty	S.No.	I/C	REMARKS	Weight (kgf)	Weight (lb)
010	16001-53000	ASSY HOLDER NOZZLE	3				0.13	0.286
020	15841-92030	NUT	3				0.005	0.011
030	15841-53230	WASHER ADJUSTING	3				0.001	0.0022
040	15841-53170	SPRING NOZZLE	3				0.004	0.0088
050	15841-53350	PIECE DISTANCE	3				0.004	0.0088
060	15841-53160	PUSH ROD	3				0.001	0.0022
070	16475-53280	NUT NOZZLE	3				0.03	0.066
080	15841-94040	WASHER	3				0.001	0.0022
090	16851-53610	PIECE NOZZLE	3				0.03	0.066
100	15841-98100	ASSY WASHER ADJUST	3			OPTION	0.043	0.0946
110	15841-53230	WASHER ADJUSTING	3			0.900MM	0.001	0.0022
110	15841-98510	WASHER ADJUSTING	3			0.925MM	0.001	0.0022
110	15841-98520	WASHER ADJUSTING	3			0.950MM	0.001	0.0022
110	15841-98530	WASHER ADJUSTING	3			0.975MM	0.001	0.0022
110	15841-98540	WASHER ADJUSTING	3			1.000MM	0.001	0.0022
110	15841-98550	WASHER ADJUSTING	3			1.025MM	0.001	0.0022
110	15841-98560	WASHER ADJUSTING	3			1.050MM	0.001	0.0022
110	15841-98570	WASHER ADJUSTING	3			1.075MM	0.001	0.0022
110	15841-98580	WASHER ADJUSTING	3			1.100MM	0.001	0.0022
110	15841-98590	WASHER ADJUSTING	3			1.125MM	0.001	0.0022
110	15841-98600	WASHER ADJUSTING	3			1.150MM	0.001	0.0022
110	15841-98610	WASHER ADJUSTING	3			1.175MM	0.001	0.0022
110	15841-98620	WASHER ADJUSTING	3			1.200MM	0.001	0.0022
110	15841-98630	WASHER ADJUSTING	3			1.225MM	0.001	0.0022
110	15841-98640	WASHER ADJUSTING	3			1.250MM	0.001	0.0022
110	15841-98650	WASHER ADJUSTING	3			1.275MM	0.001	0.0022
110	15841-98660	WASHER ADJUSTING	3			1.300MM	0.001	0.0022
110	15841-98670	WASHER ADJUSTING	3			1.325MM	0.001	0.0022
110	15841-98680	WASHER ADJUSTING	3			1.350MM	0.001	0.0022
110	15841-98690	WASHER ADJUSTING	3			1.375MM	0.001	0.0022
110	15841-98700	WASHER ADJUSTING	3			1.400MM	0.001	0.0022
110	15841-98710	WASHER ADJUSTING	3			1.425MM	0.001	0.0022
110	15841-98720	WASHER ADJUSTING	3			1.450MM	0.001	0.0022
110	15841-98730	WASHER ADJUSTING	3			1.475MM	0.001	0.0022
110	15841-98740	WASHER ADJUSTING	3			1.500MM	0.001	0.0022
110	15841-98750	WASHER ADJUSTING	3			1.525MM	0.001	0.0022
110	15841-98760	WASHER ADJUSTING	3			1.550MM	0.001	0.0022
110	15841-98770	WASHER ADJUSTING	3			1.575MM	0.001	0.0022
110	15841-98780	WASHER ADJUSTING	3			1.600MM	0.002	0.0044
110	15841-98790	WASHER ADJUSTING	3			1.625MM	0.001	0.0022
110	15841-98800	WASHER ADJUSTING	3			1.650MM	0.001	0.0022
110	15841-98810	WASHER ADJUSTING	3			1.675MM	0.004	0.0088
110	15841-98820	WASHER ADJUSTING	3			1.700MM	0.001	0.0022
110	15841-98830	WASHER ADJUSTING	3			1.725MM	0.001	0.0022
110	15841-98840	WASHER ADJUSTING	3			1.750MM	0.001	0.0022
110	15841-98850	WASHER ADJUSTING	3			1.775MM	0.001	0.0022
110	15841-98860	WASHER ADJUSTING	3			1.800MM	0.001	0.0022
110	15841-98870	WASHER ADJUSTING	3			1.825MM	0.001	0.0022
110	15841-98880	WASHER ADJUSTING	3			1.850MM	0.001	0.0022
110	15841-98890	WASHER ADJUSTING	3			1.875MM	0.001	0.0022
110	15841-98900	WASHER ADJUSTING	3			1.900MM	0.001	0.0022
110	15841-98910	WASHER ADJUSTING	3			1.925MM	0.001	0.0022
110	15841-98920	WASHER ADJUSTING	3			1.950MM	0.001	0.0022

silverthorn.co.uk

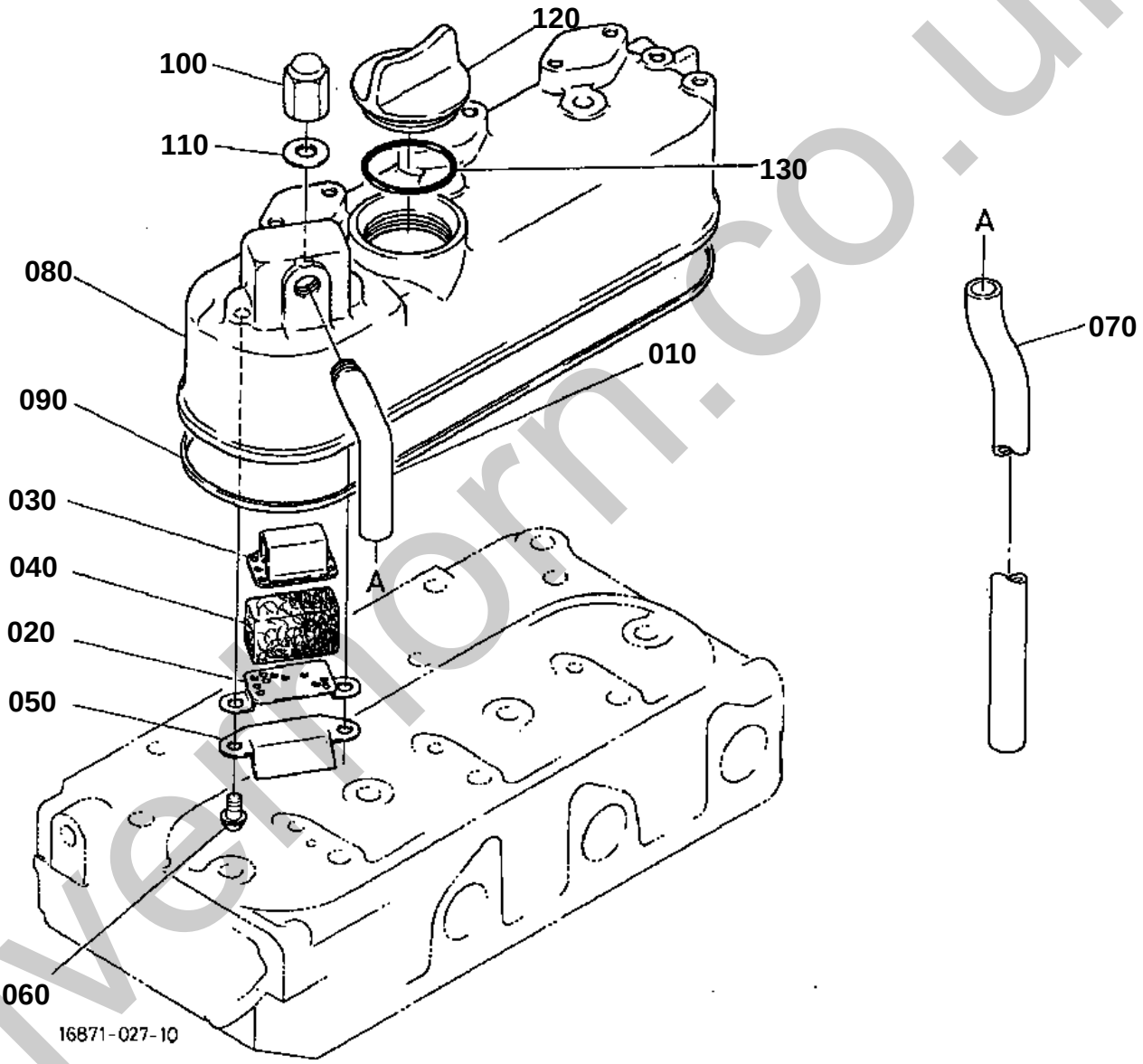

silverthorn.co.uk

HEAD COVER

↔ Interchangeable; ≠ not interchangeable; ← new for old; → old for new

REF.No	Part No.	Description	Q'ty	S.No.	I/C	REMARKS	Weight (kgf)	Weight (lb)
010	15881-05550	JOINT BREATHER PIPE	1				0.01	0.022
020	15841-05140	PLATE B/THER ELEMENT	1				0.005	0.011
030	15841-05150	PLATE B/THER ELEMENT	1				0.005	0.011
040	15841-05670	ELEMENT BREATHER	1				0.01	0.022
050	15841-05370	OIL SHIELD BREATHER	1				0.003	0.0066
060	16861-93310	SCREW	2				0.001	0.0022
070	15841-05510	PIPE BREATHER	1				0.04	0.088
080	16861-14513	COVER CYL.HEAD	1				0.38	0.836
090	16861-14520	GASKET HEAD COVER	1	<=825650			0	0
090	16861-14522	GASKET HEAD COVER	1	>=825651	←		0.02	0.044
100	15841-14620	NUT CAP	3				0.01	0.022
110	15601-96650	GASKET	3				0.001	0.0022
120	15852-33140	PLUG OIL FILLER	1				0.038	0.0836
130	04811-50300	O RING	1	<=WG4000			0.001	0.0022
130	04814-50300	RING	1	>=WJ0001	←		0.001	0.0022

silverhorn.co.uk

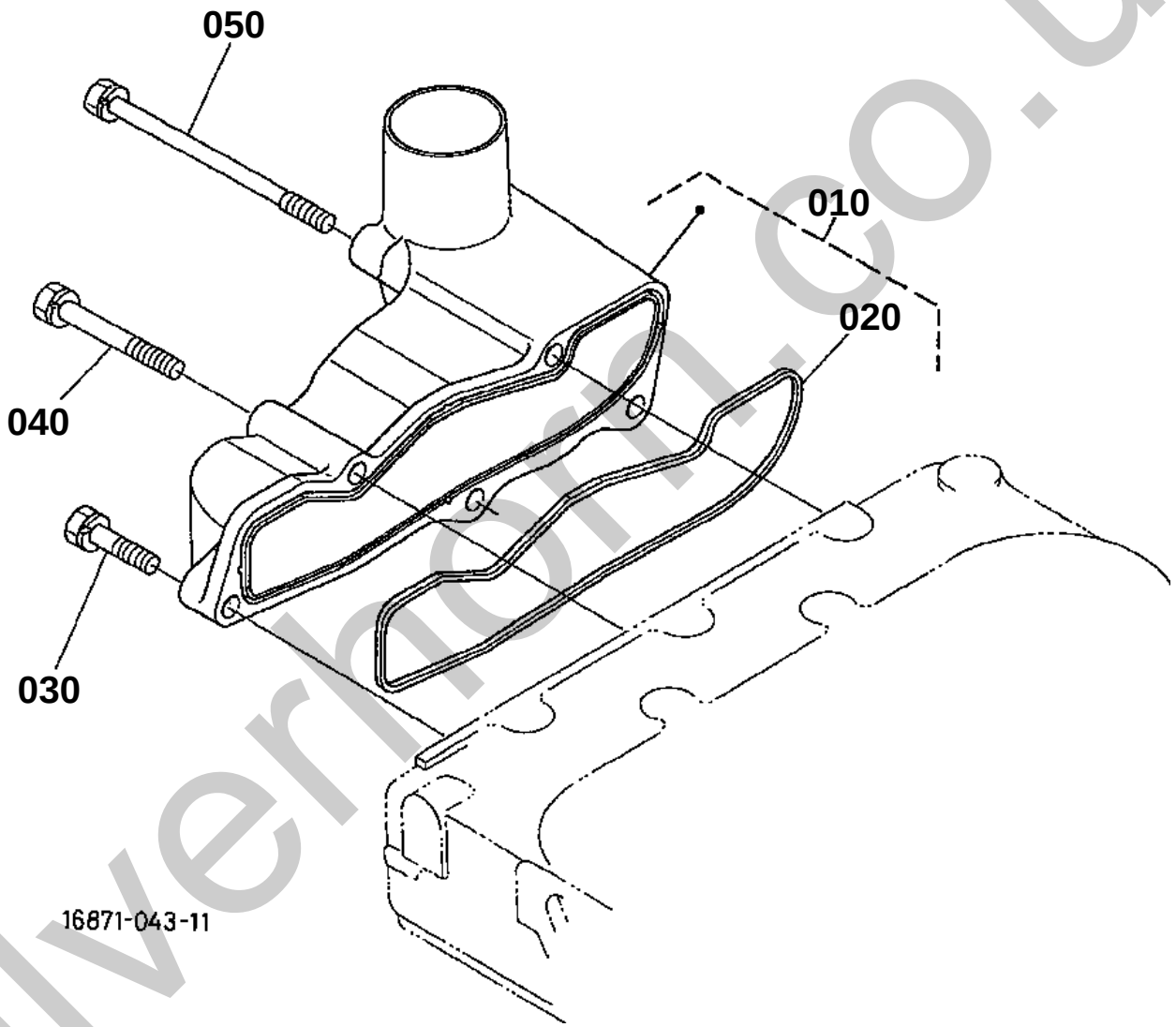

silverhorn.co.uk

INLET MANIFOLD

↔ Interchangeable; ≠ not interchangeable; ← new for old; → old for new

REF.No	Part No.	Description	Q'ty	S.No.	I/C	REMARKS	Weight (kgf)	Weight (lb)
010	15862-11770	ASSY MANIFOLD INLET	1				0.35	0.77
020	15861-11820	GASKET IN-MANIFOLD	1				0.001	0.0022
030	01023-50625	BOLT	2				0.007	0.0154
040	01023-60650	BOLT	2				0.015	0.033
050	15862-91010	BOLT	1				0.02	0.044

silverhorn.co.uk

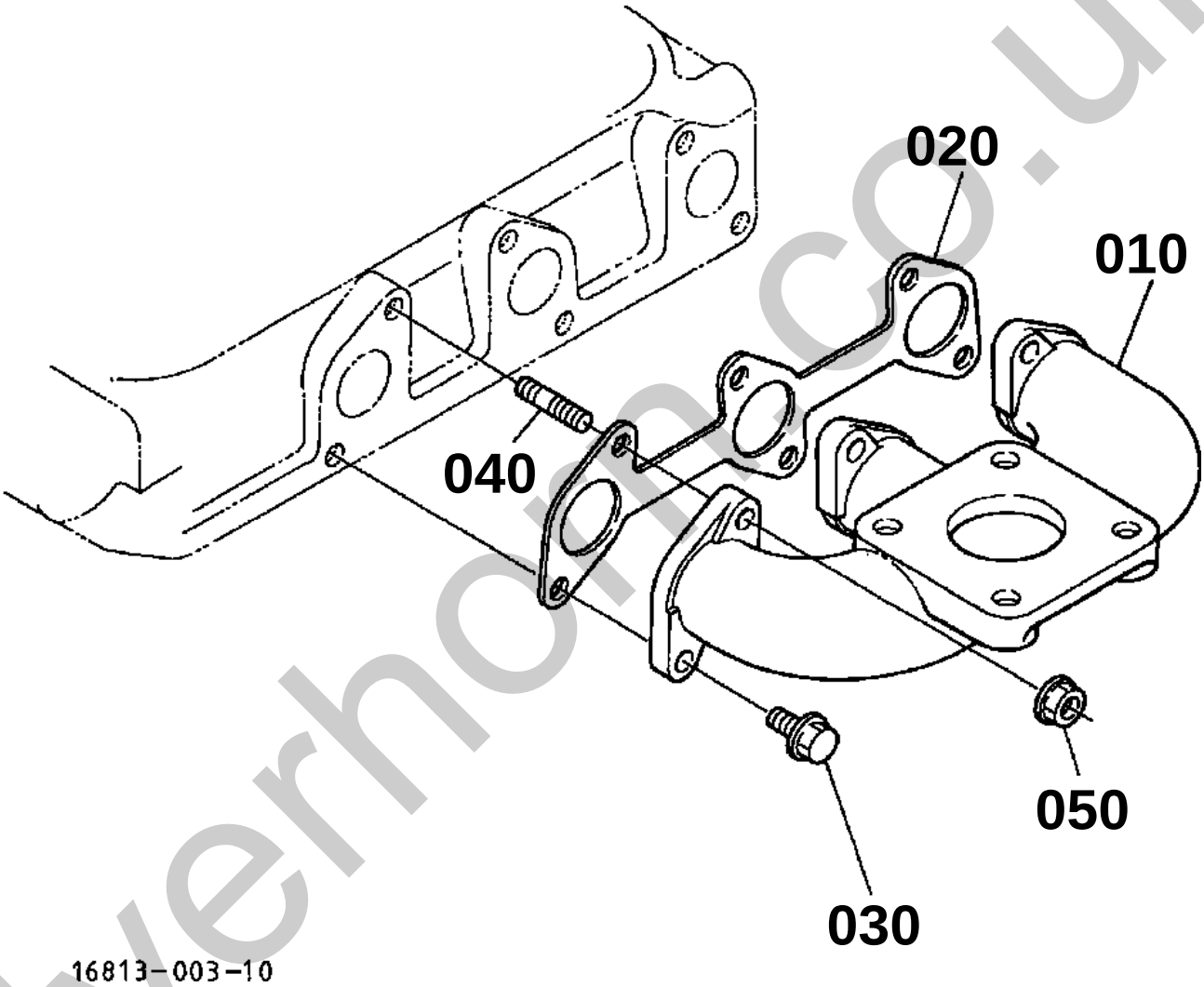

silverhorn.co.uk

EXHAUST MANIFOLD

↔ Interchangeable; ≠ not interchangeable; ← new for old; → old for new

REF.No	Part No.	Description	Q'ty	S.No.	I/C	REMARKS	Weight (kgf)	Weight (lb)
010	16813-12310	MANIFOLD EXHAUST	1				1.06	2.332
020	15862-12350	GASKET EX-MANIFOLD	1				0.01	0.022
030	01759-50616	BOLT UBS	3				0.01	0.022
040	16851-91490	STUD	3	<=830738			0	0
040	01513-50618	STUD	3	>=830739	↔		0.005	0.011
050	02756-50060	NUT UBS	3				0.001	0.0022

silverhorn.co.uk

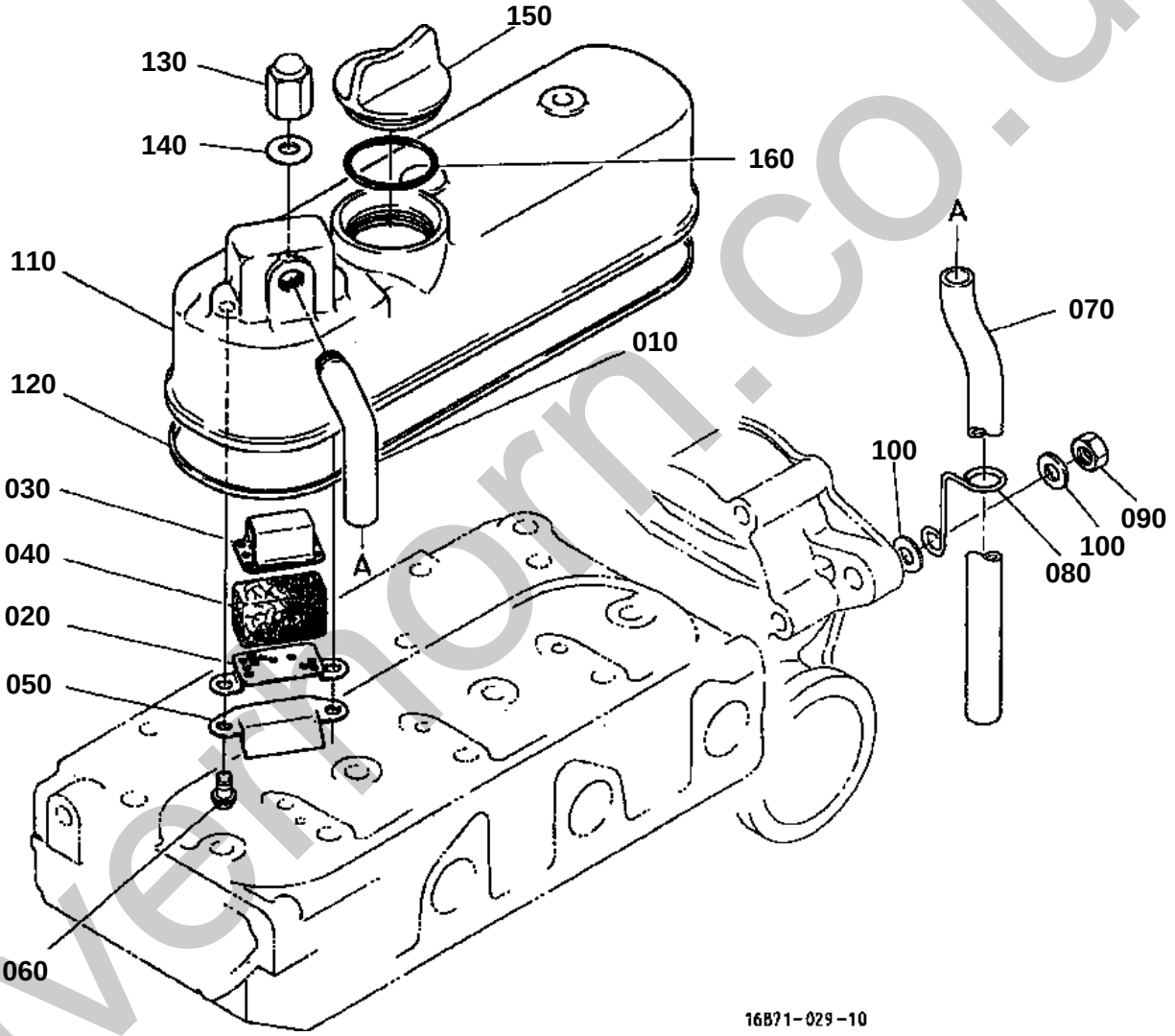

silvermorn.co.uk

CAMSHAFT

↔ Interchangeable; ≠ not interchangeable; ← new for old; → old for new

REF.No	Part No.	Description	Q'ty	S.No.	I/C	REMARKS	Weight (kgf)	Weight (lb)
010	16851-15550	TAPPET	6				0.025	0.055
020	16851-15110	PUSH ROD	6				0.02	0.044
030	16864-16010	ASSY CAMSHAFT	1				1.05	2.31
040	15521-93610	SCREW SET	1				0.002	0.0044
050	16864-16510	GEAR CAM	1				0.262	0.5764
060	05712-00518	KEY FEATHER	1				0.003	0.0066
070	15841-16270	STOPPER CAMSHAFT	1				0.027	0.0594
080	01023-50612	BOLT	2				0.005	0.011
090	16864-24210	GEAR IDLE	1				0.41	0.902
100	16864-24290	BEARING	1				0.145	0.319
110	04611-00520	CIR CLIP INTERNAL	1				0.009	0.0198
120	16864-24250	SHAFT IDLE GEAR	1				0.16	0.352
130	16864-92010	NUT	1				0.02	0.044
140	01023-50614	BOLT	3				0.005	0.011

silverhorn.co.uk

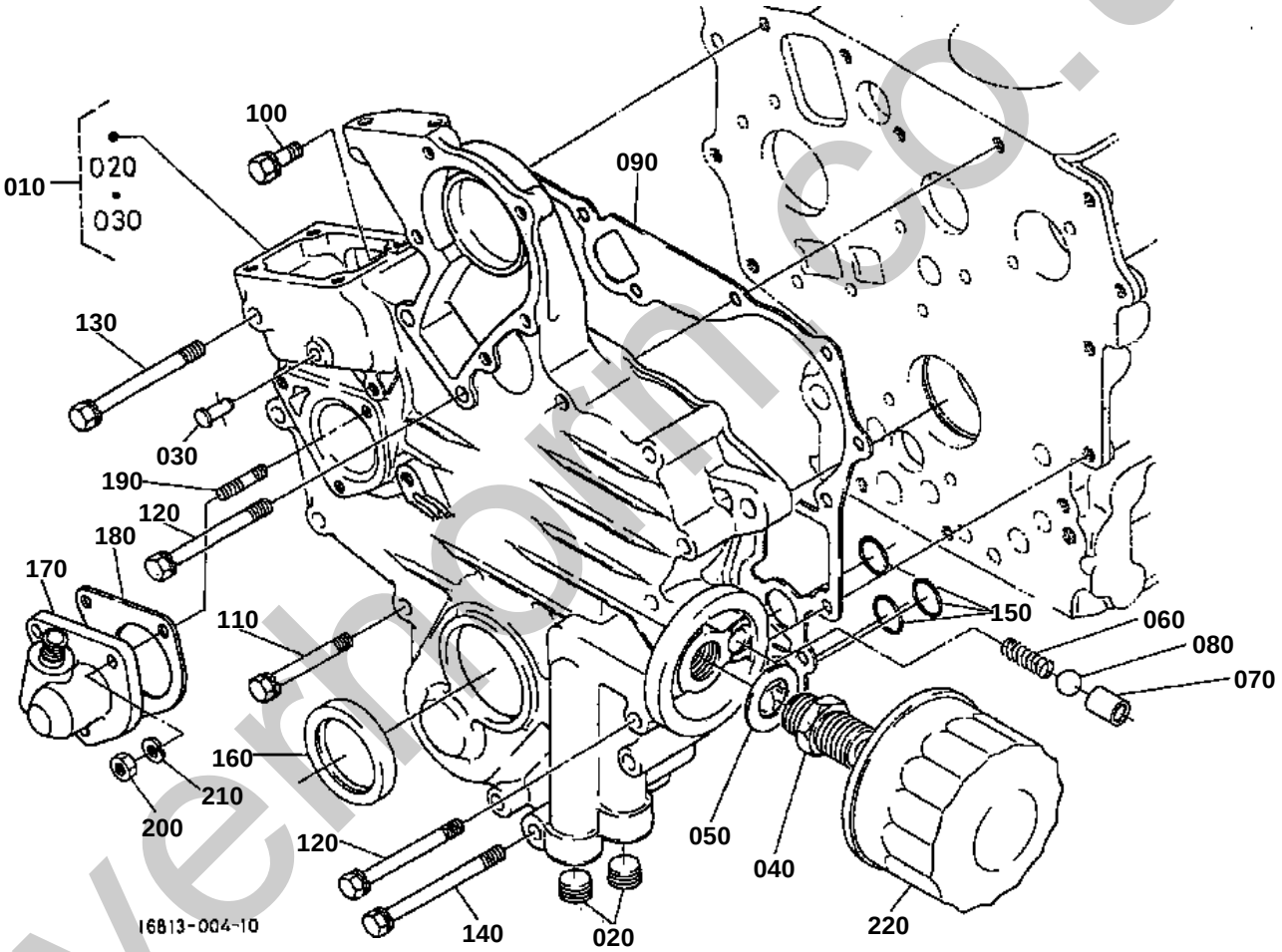

silverhorn.co.uk

GEAR CASE

↔ Interchangeable; ≠ not interchangeable; ← new for old; → old for new

REF.No	Part No.	Description	Q'ty	S.No.	I/C	REMARKS	Weight (kgf)	Weight (lb)
010	16875-04024	COMP.CASE GEAR	1				1.78	3.916
020	16851-96010	PLUG	2				0.015	0.033
030	15841-56280	PIN START SPRING	1				0.005	0.011
040	15241-32290	JOINT PIPE	1				0.053	0.1166
050	15841-94010	WASHER PLAIN	1				0.003	0.0066
060	16851-36950	SPRING	1				0.02	0.044
070	15841-36930	SEAT VALVE	1				0.01	0.022
080	07715-03211	BALL	1				0.003	0.0066
090	15862-04132	GASKET	1				0.007	0.0154
100	01023-50168	BOLT	1				0	0
110	01023-60650	BOLT	8				0.015	0.033
120	15841-91010	BOLT	5				0.014	0.0308
130	01023-60670	BOLT	1				0.015	0.033
140	01023-50675	BOLT	1				0.01	0.022
150	04811-06130	O RING	3	<=WG4000			0.001	0.0022
150	04814-06130	O RING	3	>=WJ0001	←		0.01	0.022
160	15841-04140	SEAL OIL	1				0.012	0.0264
170	59360-25950	ASSY GEAR CASE H/M	1				0.29	0.638
180	19461-88132	GASKET	1				0.002	0.0044
190	15221-88210	STUD	3				0.005	0.011
200	02056-50060	NUT	3				0.002	0.0044
210	04512-50060	WASHER SPRING	3				0.001	0.0022
220	15853-99170	CARTRIDGE OIL FILTER	1				0	0

silverhorn.co.uk

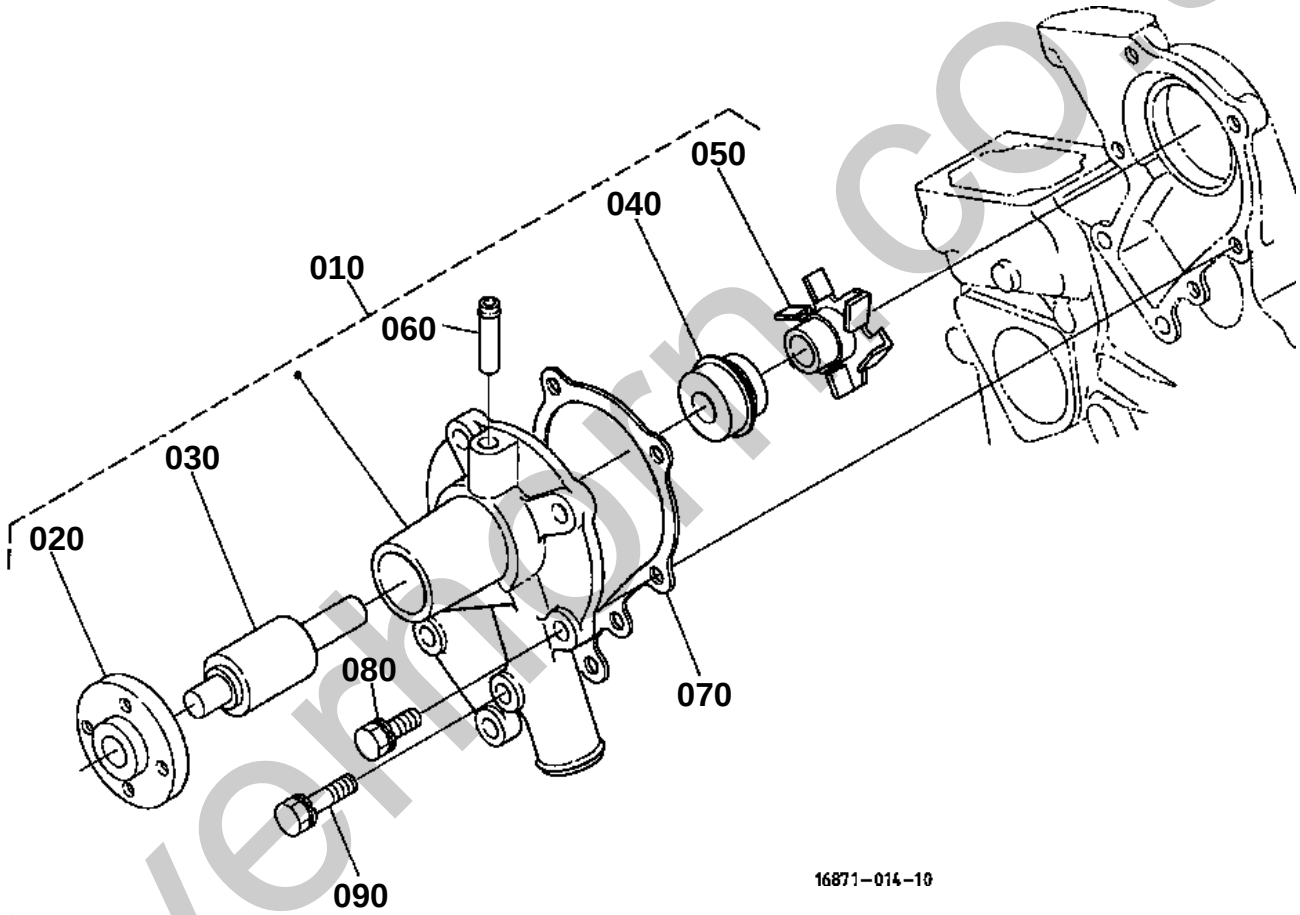

silvermorn.co.uk

WATER PUMP

↔ Interchangeable; ≠ not interchangeable; ← new for old; → old for new

REF.No	Part No.	Description	Q'ty	S.No.	I/C	REMARKS	Weight (kgf)	Weight (lb)
010	19883-73030	ASSY PUMP WATER	1				0.65	1.43
020	15852-73520	FLANGE WATER PUMP	1				0.13	0.286
030	15852-73550	BEARING	1				0.18	0.396
040	15481-73050	ASSY SEAL MECHANICAL	1				0.02	0.044
050	19883-73510	IMPELLER WATER PUMP	1				0.05	0.11
060	15852-73340	PIPE WATER RETURN	1				0.02	0.044
070	15881-73432	GASKET	1				0.002	0.0044
080	01023-50622	BOLT	4				0.005	0.011
090	01023-50638	BOLT	1				0.01	0.022

silverhorn.co.uk

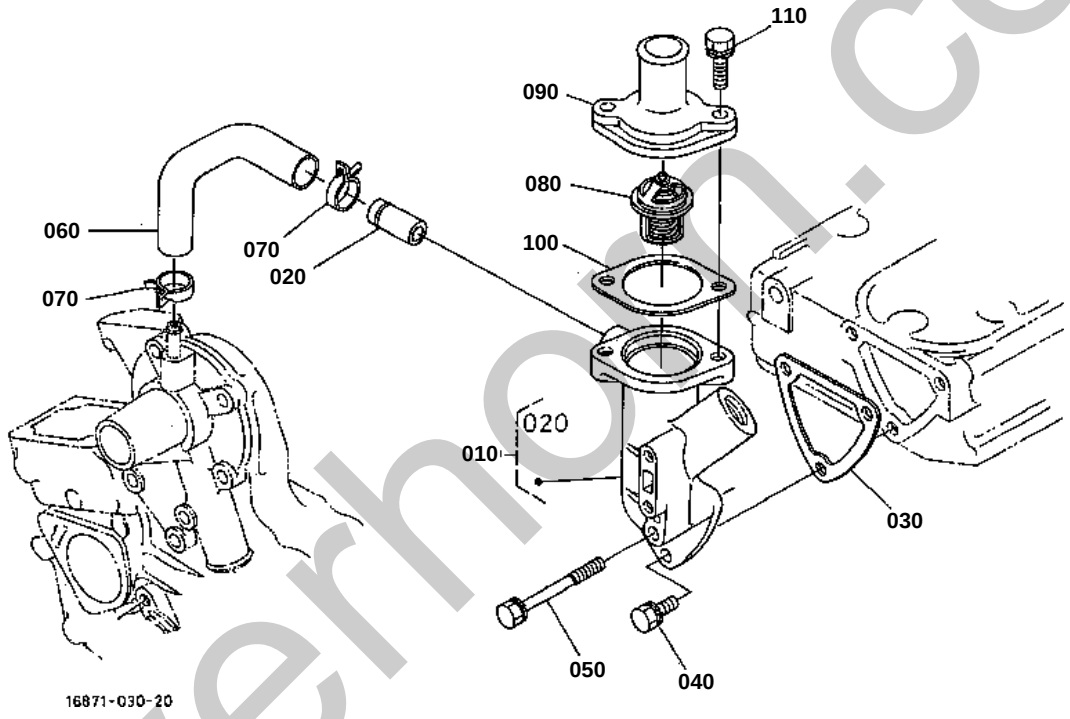

silverhorn.co.uk

WATER FLANGE/THERMOSTAT

↔ Interchangeable; ≠ not interchangeable; ← new for old; → old for new

REF.No	Part No.	Description	Q'ty	S.No.	I/C	REMARKS	Weight (kgf)	Weight (lb)
010	16851-72700	COMP.FLANGE WATER	1				0.24	0.528
020	16241-73370	PIPE WATER RETURN	1				0.007	0.0154
030	15841-72922	GASKET	1				0.001	0.0022
040	01023-50616	BOLT	2				0.005	0.011
050	15881-91020	BOLT	1				0.01	0.022
060	16851-73350	PIPE WATER RETURN	1				0.15	0.33
070	16241-73360	BAND PIPE	2				0.003	0.0066
080	15531-73010	ASSY THERMOSTAT	1				0.07	0.154
090	15841-73260	COVER THERMOSTAT	1				0.04	0.088
100	16851-73270	GASKET THERMOSTAT	1				0.003	0.0066
110	01023-50622	BOLT	2				0.005	0.011

silverhorn.co.uk

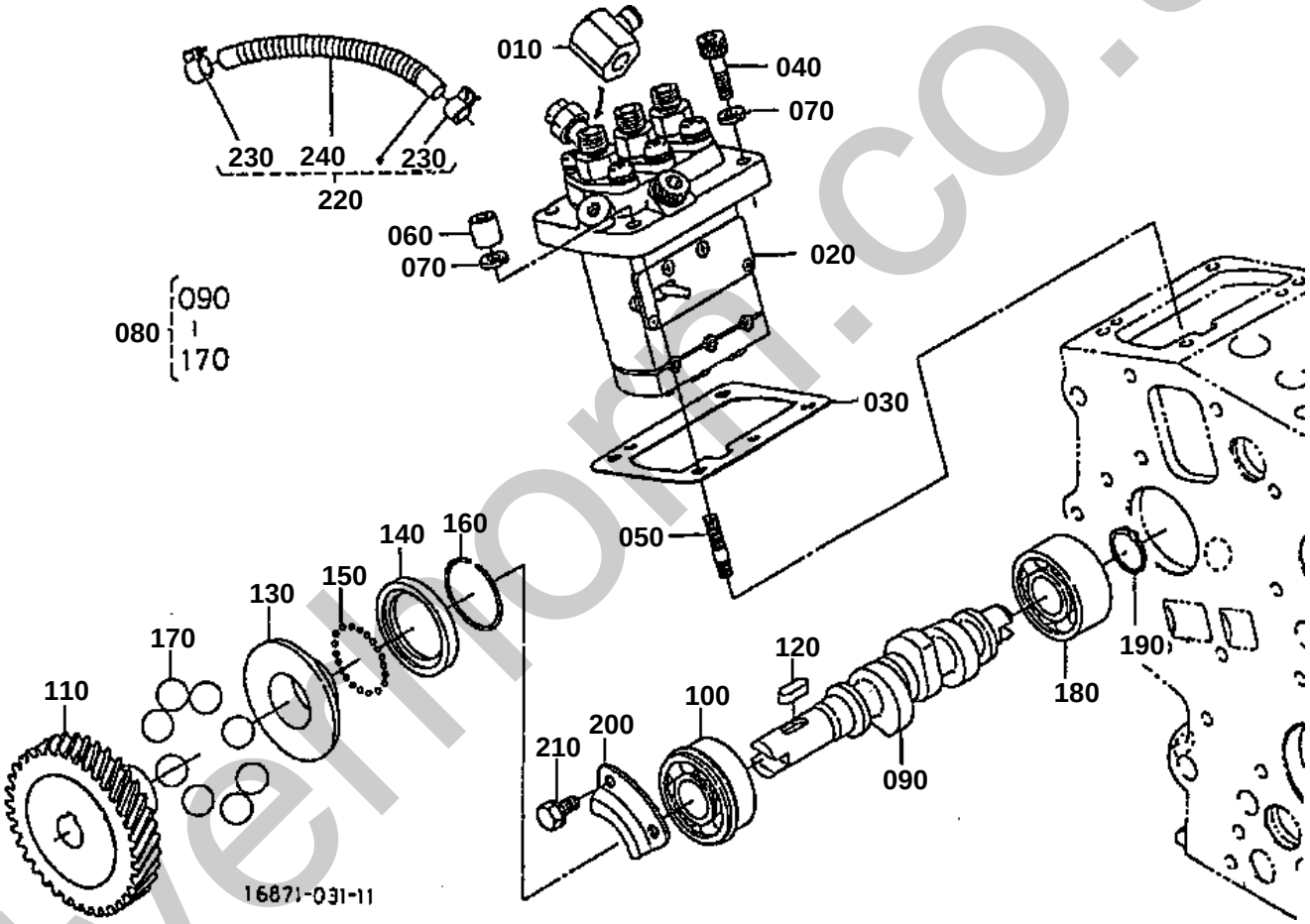

silverthorn.co.uk

↔ Interchangeable; ≠ not interchangeable; ← new for old; → old for new

REF.No	Part No.	Description	Q'ty	S.No.	I/C	REMARKS	Weight (kgf)	Weight (lb)
010	15841-95680	JOINT EYE	1				0.03	0.066
020	16006-51010	ASSY PUMP INJECTION	1			REFER TO L.NO.0B11-R0 FOR COMPONENTS.	1.1	2.42
030	16006-52092	SHIM INJECTION	1			0.20MM	0.004	0.0088
030	16006-52112	SHIM INJECTION	1			0.25MM	0.004	0.0088
030	16006-52122	SHIM INJECTION	1			0.30MM	0.006	0.0132
040	01311-10620	BOLT HEX-SOC-HD	2				0.012	0.0264
050	15841-91500	STUD	2				0.04	0.088
060	15841-92320	NUT CAP	2				0.01	0.022
070	04512-60060	WASHER SPRING	4				0.001	0.0022
080	16861-16020	ASSY CAMSHAFT FUEL	1				0.856	1.8832
090	15875-16170	CAMSHAFT FUEL	1				0.316	0.6952
100	08153-06203	BEARING BALL	1				0.08	0.176
110	16851-51150	GEAR INJECTION PUMP	1				0.2	0.44
120	05712-00515	KEY FEATHER	1				0.003	0.0066
130	15841-55450	SLEEVE GOVERNOR	1				0.05	0.11
140	15841-55690	CASE GOVERNOR BALL	1				0.02	0.044
150	07715-00801	BALL	32				0.001	0.0022
160	15261-55470	CIR-CLIP GOV. SLEEVE	1				0.002	0.0044
170	07715-03217	BALL	8				0.01	0.022
180	08103-06203	BEARING BALL	1				0.065	0.143
190	04612-00170	CIRCLIP EXTERNAL	1				0.001	0.0022
200	15841-16320	STOPPER FUEL.C/SHAFT	1				0.015	0.033
210	01023-50612	BOLT	2				0.005	0.011
220	15263-42010	ASSY PIPE FUEL	1				0.04	0.088
230	16241-42750	BAND PIPE	2				0	0
240	66591-54250	SPRING PIPE PROTECT.	1				0.01	0.022

silvermorn.co.uk

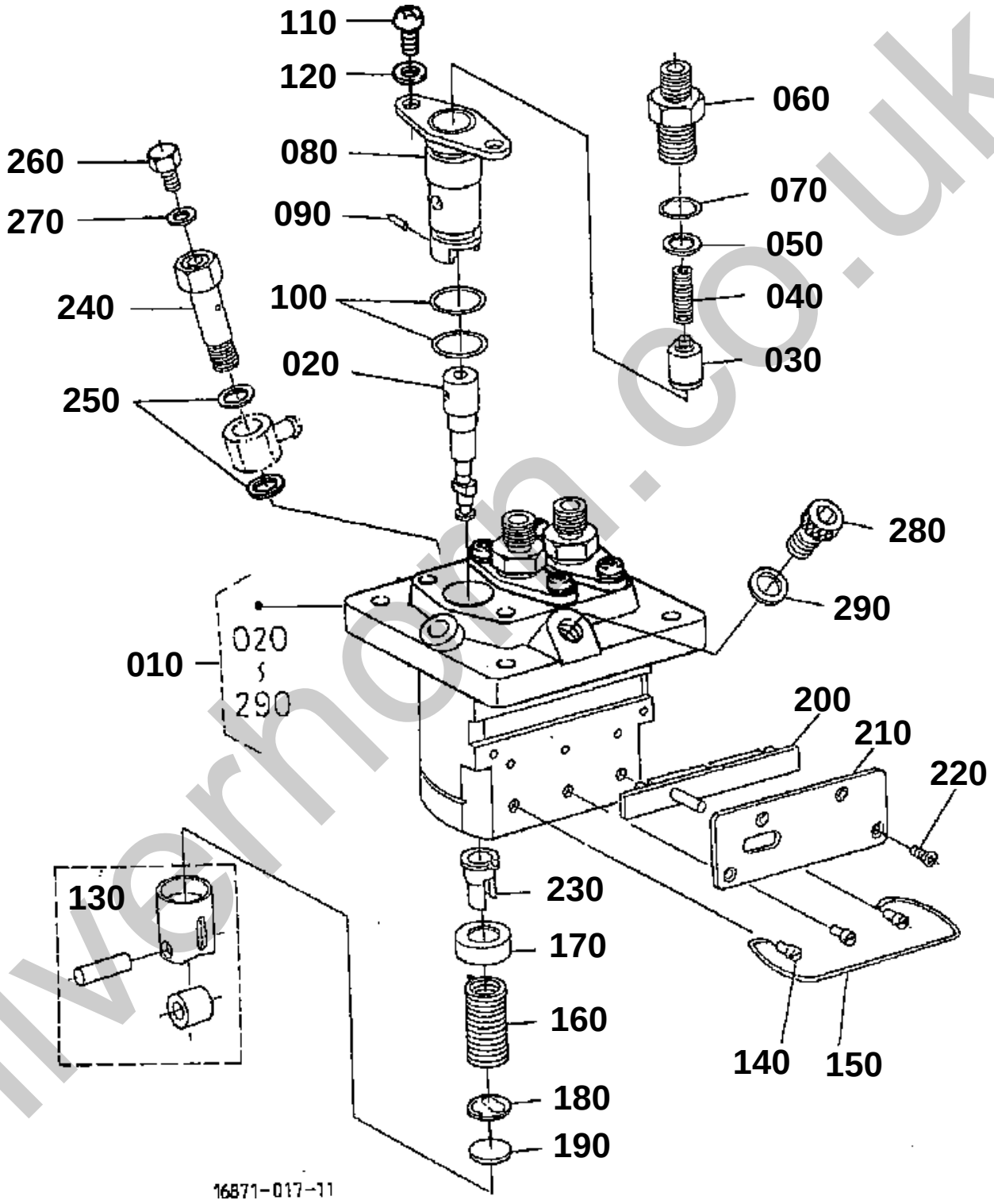

silverhorn.co.uk

↔ Interchangeable; ≠ not interchangeable; ← new for old; → old for new

REF.No	Part No.	Description	Q'ty	S.No.	I/C	REMARKS	Weight (kgf)	Weight (lb)
010	16006-51010	ASSY PUMP INJECTION	1				1.1	2.42
020	16851-51050	PLUNGER PUMP	3				0.035	0.077
030	15841-51030	VALVE DELIVERY	3				0.015	0.033
040	15841-51230	SPRING DELIV.VALVE	3				0.004	0.0088
050	15841-51240	GASKET DELIV.VALVE	3				0.001	0.0022
060	16851-51220	HOLDER DELIVE.VALVE	3				0.045	0.099
070	15841-96760	O RING	3				0.001	0.0022
080	15841-51560	FLANGE SLEEVE	3				0.06	0.132
090	15841-94570	PIN JOINT	3				0.001	0.0022
100	15841-51200	O RING	6				0.001	0.0022
110	15862-91430	SCREW	6				0.01	0.022
120	15852-51470	WASHER	6				0.002	0.0044
130	15841-51070	ASSY TAPPET	3				0.03	0.066
140	15841-51250	PIN TAPPET GUIDE	3				0.001	0.0022
150	15861-51430	PIN CLAMP	1				0.002	0.0044
160	15841-51280	SPRING PLUNGER	3				0.015	0.033
170	15841-51270	SEAT SPRING UPPER	3				0.005	0.011
180	15841-51290	SEAT SPRING LOWER	3				0.005	0.011
190	15841-51490	SHIM	3				0.005	0.011
200	15861-51060	RACK CONTROL	1				0.02	0.044
210	15861-51540	PLATE	1				0.02	0.044
220	15841-93110	SCREW CSK-HD	4				0.001	0.0022
230	15841-51380	SLEEVE CONTROL	3				0.006	0.0132
240	15841-51320	SCREW FOLLOW	1				0.024	0.0528
250	15841-96650	GASKET	2				0.001	0.0022
260	15841-51350	SCREW	1				0.005	0.011
270	15841-96660	GASKET	1				0.001	0.0022
280	15861-91010	BOLT	1				0.013	0.0286
290	15861-96650	GASKET	1				0.001	0.0022

silverhorn.co.uk

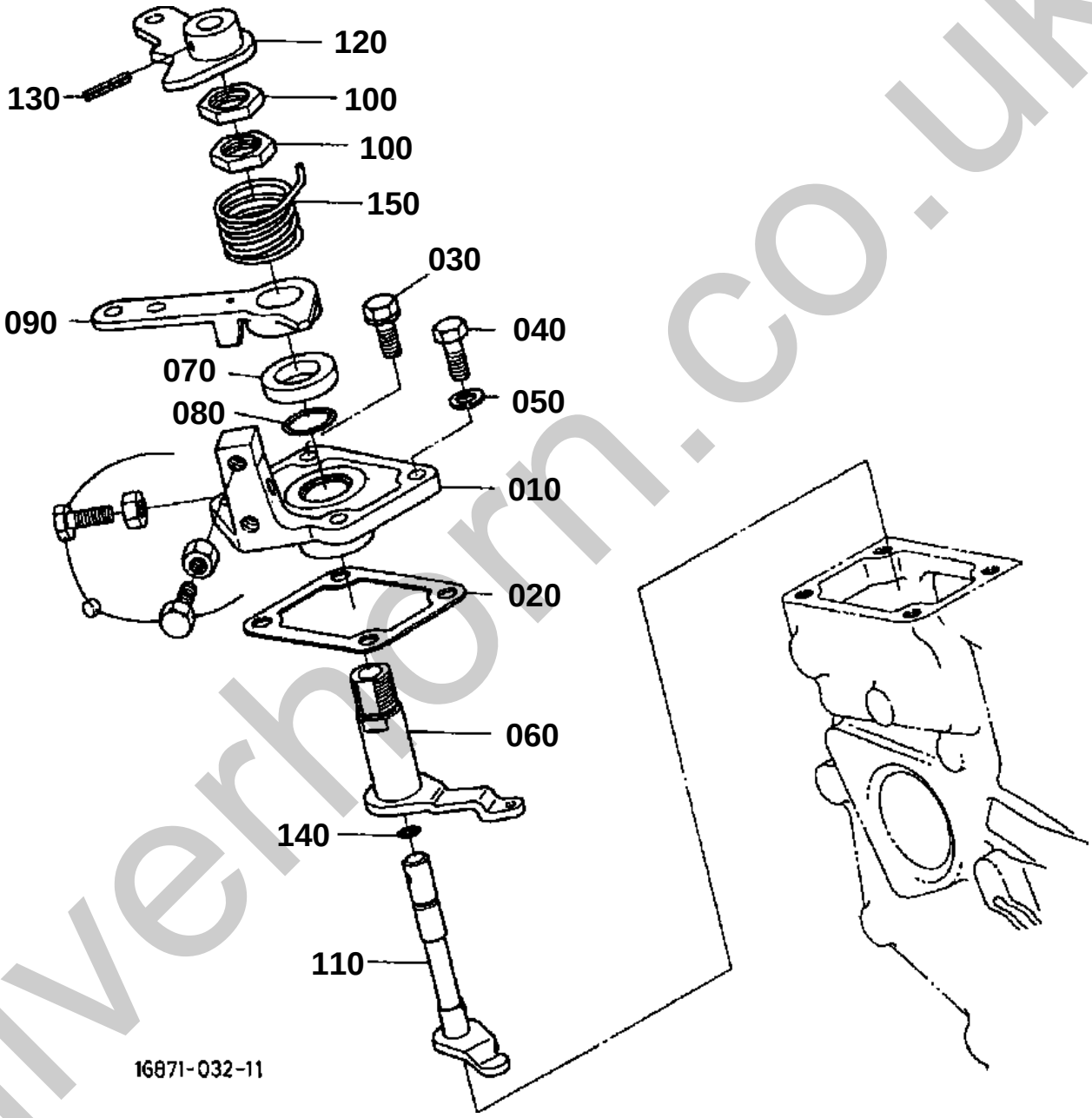

silverhorn.co.uk

SPEED CONTROL PLATE

↔ Interchangeable; ≠ not interchangeable; ← new for old; → old for new

REF.No	Part No.	Description	Q'ty	S.No.	I/C	REMARKS	Weight (kgf)	Weight (lb)
010	15841-57110	PLATE SPEED CONTROL	1				0.12	0.264
020	15841-57212	GASKET	1				0.001	0.0022
030	01023-50618	BOLT	2				0.006	0.0132
040	01053-50618	BOLT	2				0.006	0.0132
050	15601-96650	GASKET	2				0.001	0.0022
060	15841-56110	LEVER GOVERNOR	1				0.06	0.132
070	15841-57240	COLLAR	1				0.01	0.022
080	04811-10160	O RING	1	<=WG4000			0.001	0.0022
080	04814-10160	O RING	1	>=WJ0001	←		0.001	0.0022
090	16667-57150	LEVER SPEED CONTROL	1				0.045	0.099
100	15841-92010	NUT SPEED CONTROL	2				0.007	0.0154
110	16878-57740	SHAFT LEVER	1				0.041	0.0902
120	15841-57720	LEVER ENGINE STOP	1				0	0
130	05411-00318	PIN SPRING	1				0.001	0.0022
140	04811-10070	O RING	1				0.001	0.0022
150	15841-57920	SPRING RETURN	1				0.008	0.0176

silverhorn.co.uk

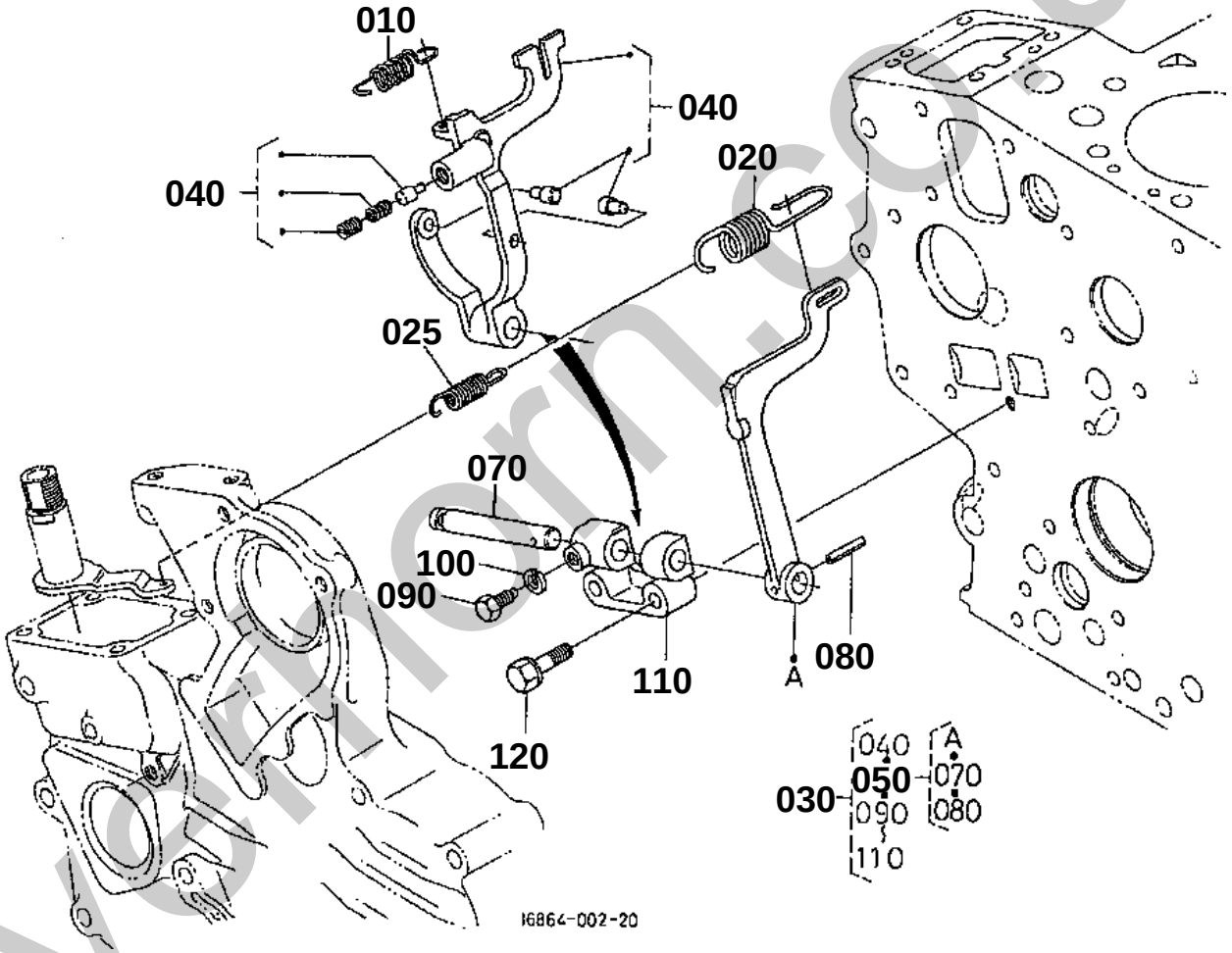

silvermorn.co.uk

GOVERNOR

↔ Interchangeable; ≠ not interchangeable; ← new for old; → old for new

REF.No	Part No.	Description	Q'ty	S.No.	I/C	REMARKS	Weight (kgf)	Weight (lb)
010	15841-56480	SPRING START	1				0.001	0.0022
020	16864-56410	SPRING GOVERNOR	1				0.004	0.0088
025	16864-56420	SPRING GOVERNOR	1				0.003	0.0066
030	16813-56050	ASSY LEVER FORK	1				0.25	0.55
040	16813-56040	COMP.LEVER FORK	1				0.12	0.264
050	17563-56060	ASSY LEVER FORK	1				0.09	0.198
070	15841-56150	SHAFT FORK LEVER	1				0.035	0.077
080	05411-00318	PIN SPRING	1				0.001	0.0022
090	15261-66410	BOLT	1				0.003	0.0066
100	04512-60050	WASHER SPRING	1				0.002	0.0044
110	15841-56230	HOLDER FORK LEVER	1				0.035	0.077
120	01023-50635	BOLT	2				0.01	0.022

silverhorn.co.uk

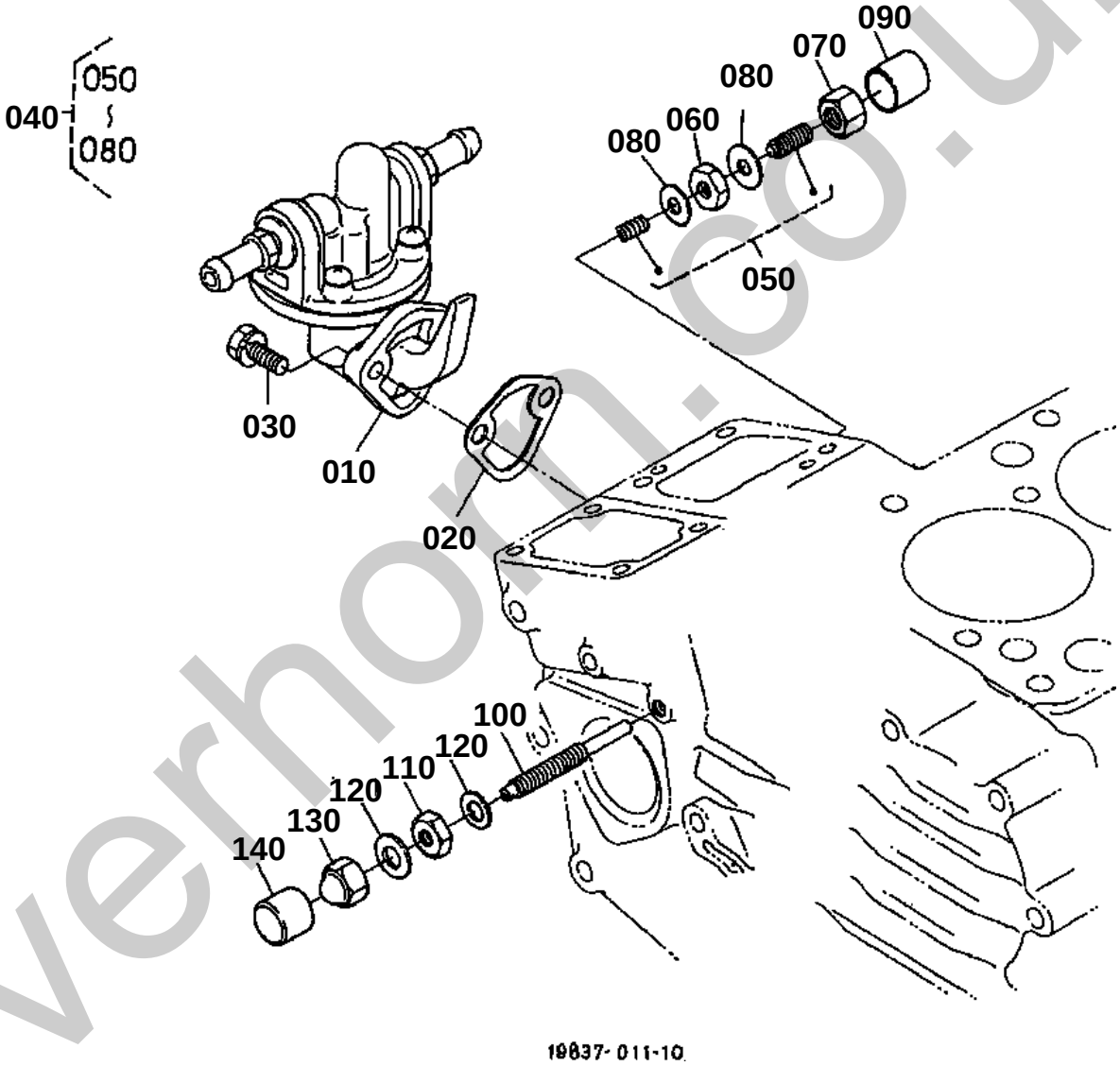

silverhorn.co.uk

FUEL PUMP

↔ Interchangeable; ≠ not interchangeable; ← new for old; → old for new

REF.No	Part No.	Description	Q'ty	S.No.	I/C	REMARKS	Weight (kgf)	Weight (lb)
010	19035-52030	ASSY PUMP FUEL	1				0	0
020	16264-52140	GASKET FUEL PUMP	1				0.001	0.0022
030	01023-50616	BOLT	2				0.005	0.011
040	15841-54092	ASSY APPARATUS IDLE	1				0.02	0.044
050	15841-54100	ASSY BOLT ADJUSTING	1				0.009	0.0198
060	15261-92020	NUT	1				0.004	0.0088
070	15841-54220	NUT CAP	1				0.006	0.0132
080	15021-33660	GASKET	2				0.001	0.0022
090	15841-54270	CAP	1				0.001	0.0022
100	15841-54122	BOLT ADJUSTING	1				0.008	0.0176
110	15841-92020	NUT	1				0.004	0.0088
120	15601-96650	GASKET	2				0.001	0.0022
130	15841-92330	NUT CAP	1				0.006	0.0132
140	16241-54420	CAP	1				0.004	0.0088

silverhorn.co.uk

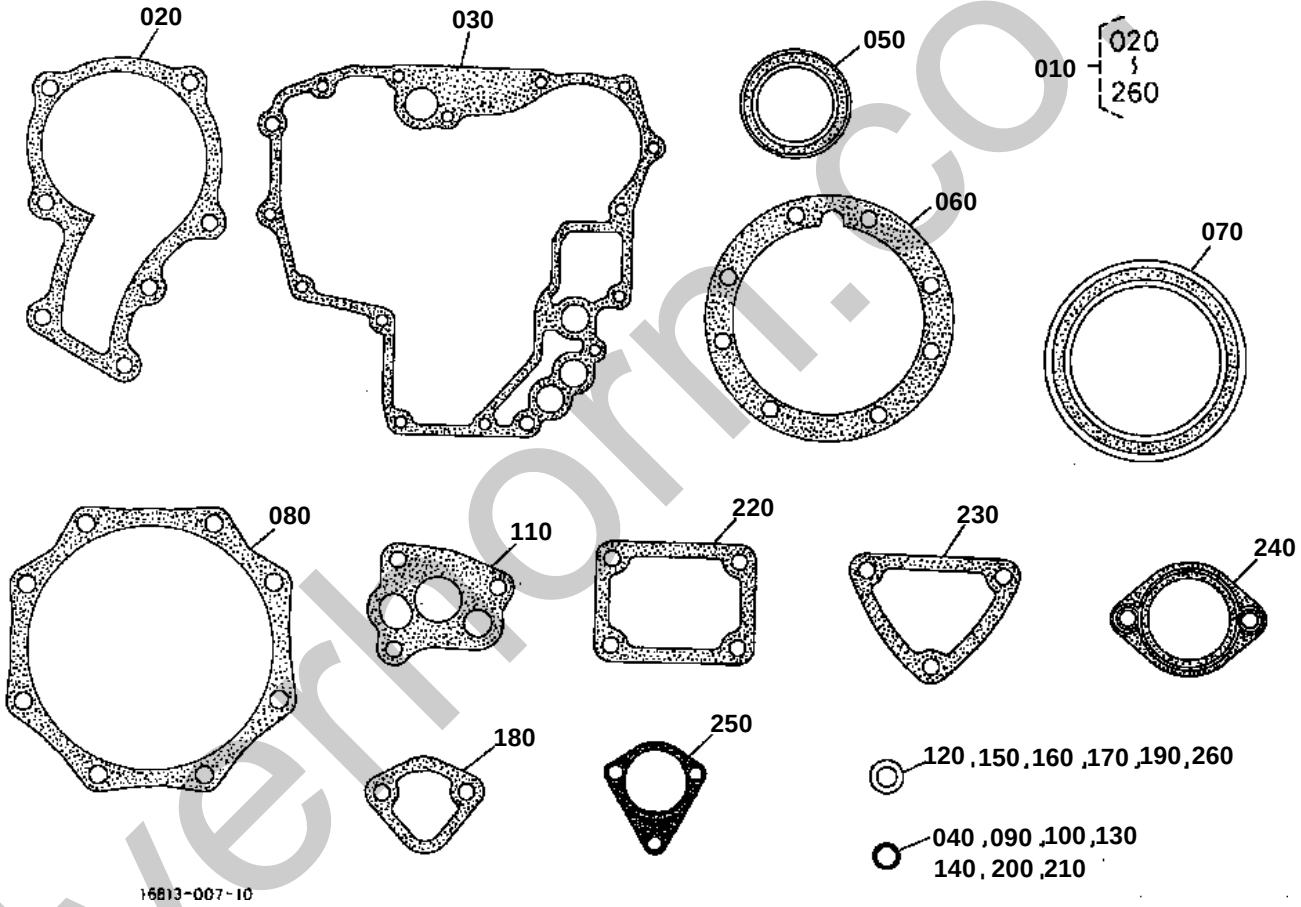

silverhorn.co.uk

LOWER GASKET KIT

↔ Interchangeable; ≠ not interchangeable; ← new for old; → old for new

REF.No	Part No.	Description	Q'ty	S.No.	I/C	REMARKS	Weight (kgf)	Weight (lb)
010	07916-28695	KIT GASKET LOWER	1				0.18	0.396
020	15881-73432	GASKET	1				0.002	0.0044
030	15862-04132	GASKET	1				0.007	0.0154
040	04811-06130	O RING	3	<=WG4000			0.001	0.0022
040	04814-06130	O RING	3	>=WJ0001	←		0.01	0.022
050	15841-04140	SEAL OIL	1				0.012	0.0264
060	15852-04360	GASKET	1				0.005	0.011
070	09560-00007	SEAL OIL	1				0.029	0.0638
080	15841-04822	GASKET	1				0.004	0.0088
090	04811-16220	O RING	1	<=WG4000			0.001	0.0022
090	04814-16220	O RING	1	>=WJ0001	←		0.001	0.0022
100	04811-00160	O RING	1	<=WG4000			0.001	0.0022
100	04814-00160	RING	1	>=WJ0001	←		0.001	0.0022
110	16851-35152	GASKET	1				0.001	0.0022
120	15601-96650	GASKET	5				0.001	0.0022
130	15841-96760	O RING	3				0.001	0.0022
140	15841-51200	O RING	6				0.001	0.0022
150	15841-96650	GASKET	2				0.001	0.0022
160	15841-96660	GASKET	1				0.001	0.0022
170	15861-96650	GASKET	1				0.001	0.0022
180	16264-52140	GASKET FUEL PUMP	1				0.001	0.0022
190	15021-33660	GASKET	2				0.001	0.0022
200	04811-10160	O RING	1	<=WG4000			0.001	0.0022
200	04814-10160	O RING	1	>=WJ0001	←		0.001	0.0022
210	04811-10070	O RING	1				0.001	0.0022
220	15841-57212	GASKET	1				0.001	0.0022
230	15841-72922	GASKET	1				0.001	0.0022
240	16851-73270	GASKET THERMOSTAT	1				0.003	0.0066
250	19461-88132	GASKET	1				0.002	0.0044
260	6C090-58960	GASKET	1				0.002	0.0044

silverhorn.co.uk

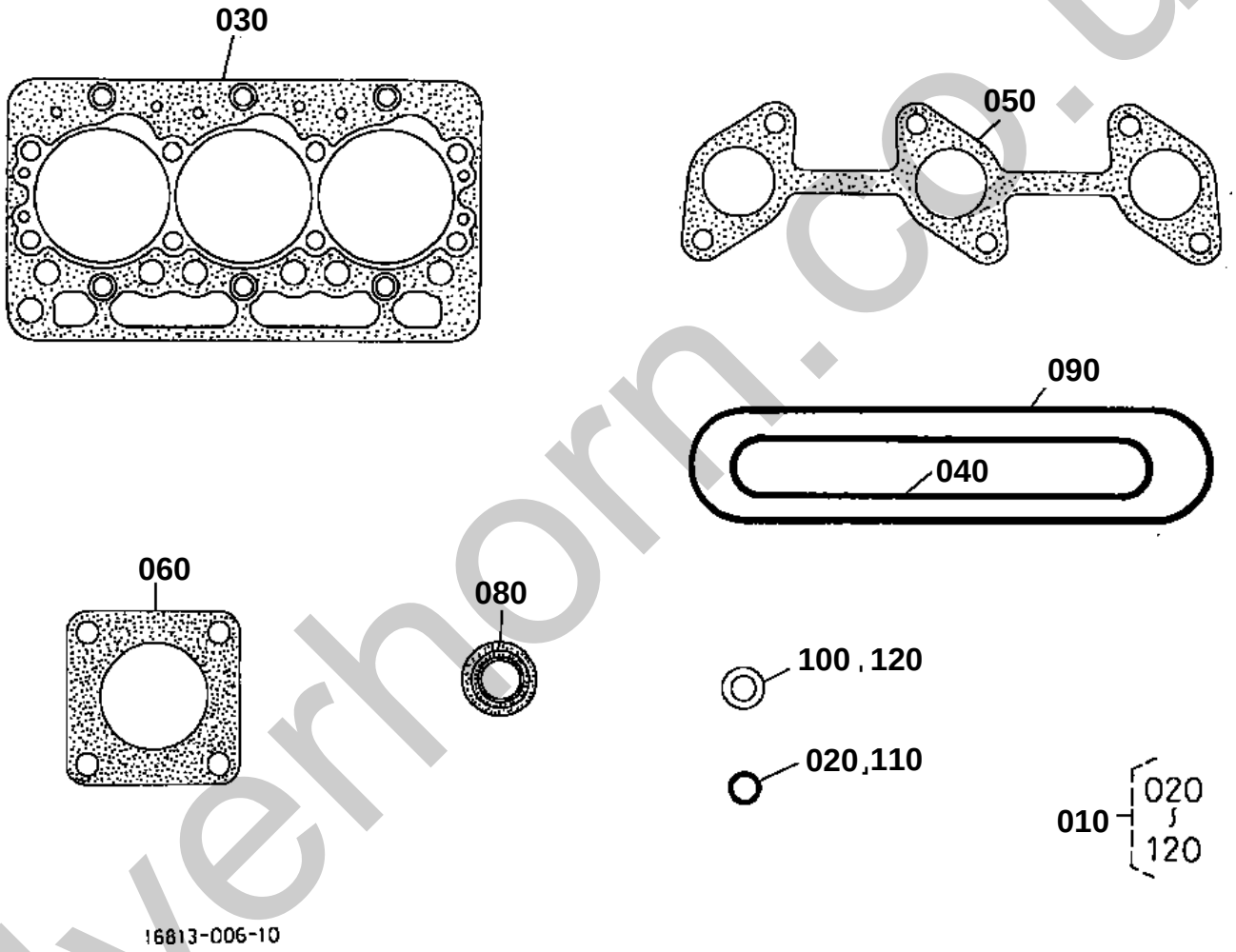

silverhorn.co.uk

UPPER GASKET KIT

↔ Interchangeable; ≠ not interchangeable; ← new for old; → old for new

REF.No	Part No.	Description	Q'ty	S.No.	I/C	REMARKS	Weight (kgf)	Weight (lb)
010	07916-29475	KIT GASKET UPPER	1				0	0
020	15221-33700	O RING	1				0.001	0.0022
030	16871-03310	GASKET CYLINDER HEAD	1				0.083	0.1826
040	15861-11820	GASKET IN-MANIFOLD	1				0.001	0.0022
050	15862-12350	GASKET	1				0.01	0.022
060	15263-12370	GASKET MUFFLER NA	1				0.015	0.033
080	15841-13150	SEAL VALVE STEM	6				0.015	0.033
090	16861-14520	GASKET HEAD COVER	1	<=825650			0	0
090	16861-14522	GASKET HEAD COVER	1	>=825651	←		0.02	0.044
100	15601-96650	GASKET	3				0.001	0.0022
110	04811-50300	O RING	1	<=WG4000			0.001	0.0022
110	04814-50300	RING	1	>=WJ0001	←		0.001	0.0022
120	15841-53622	GASKET	3				0.002	0.0044

silverhorn.co.uk

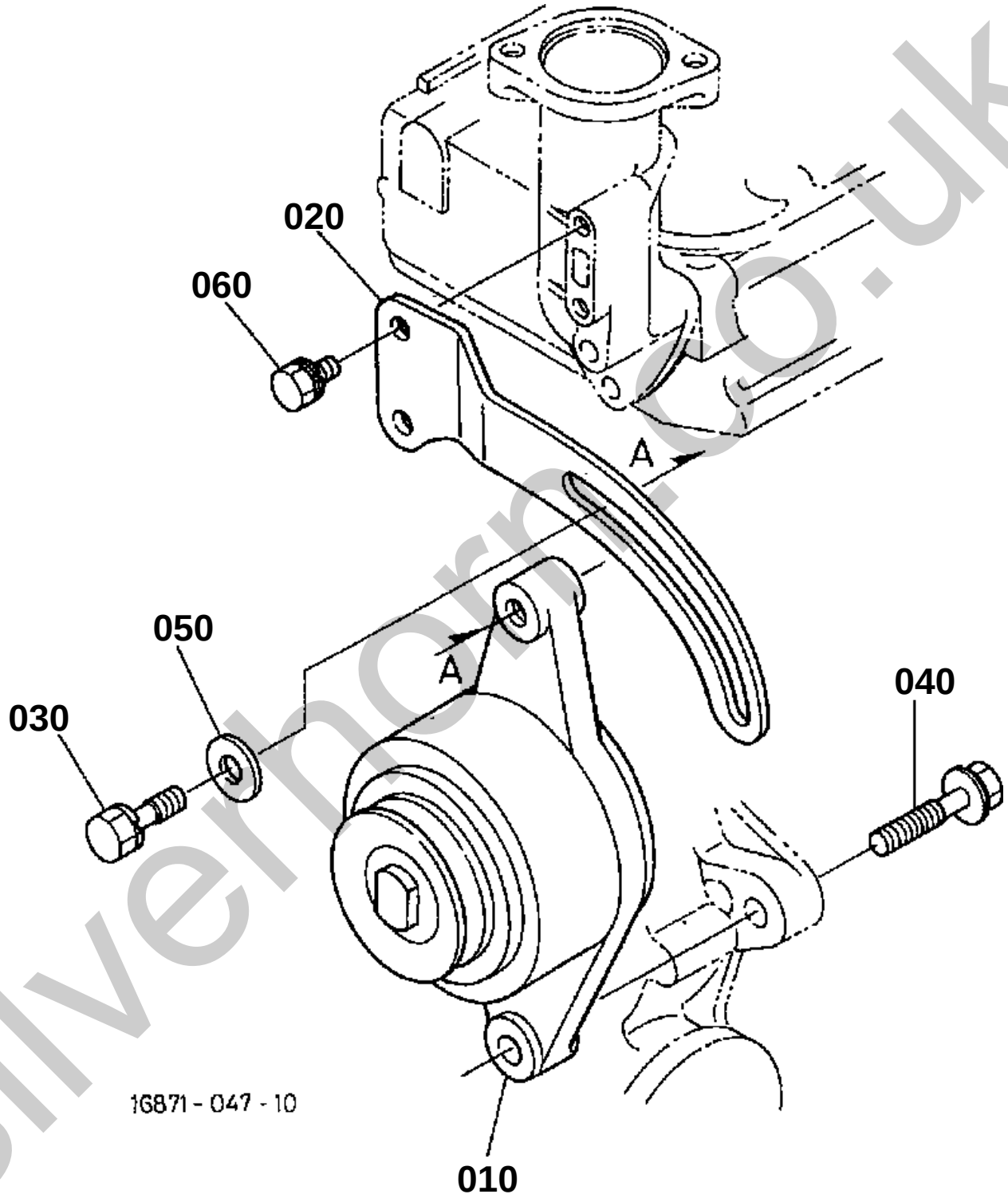

silverhorn.co.uk

DYNAMO

↔ Interchangeable; ≠ not interchangeable; ← new for old; → old for new

REF.No	Part No.	Description	Q'ty	S.No.	I/C	REMARKS	Weight (kgf)	Weight (lb)
010	6C040-59250	ASSY DYNAMO	1			REFER TO L.NO.0C03-L0 FOR COMPONENTS.	1.33	2.926
020	15872-64420	STAY DYNAMO	1	<=825650			0	0
020	12599-64420	STAY DYNAMO	1	>=825651	↔		0.1	0.22
030	01123-50825	BOLT	1				0.013	0.0286
040	01125-50855	BOLT	1				0.025	0.055
050	04015-60080	WASHER PLAIN	1				0.01	0.022
060	01023-50616	BOLT	2				0.005	0.011

silverhorn.co.uk

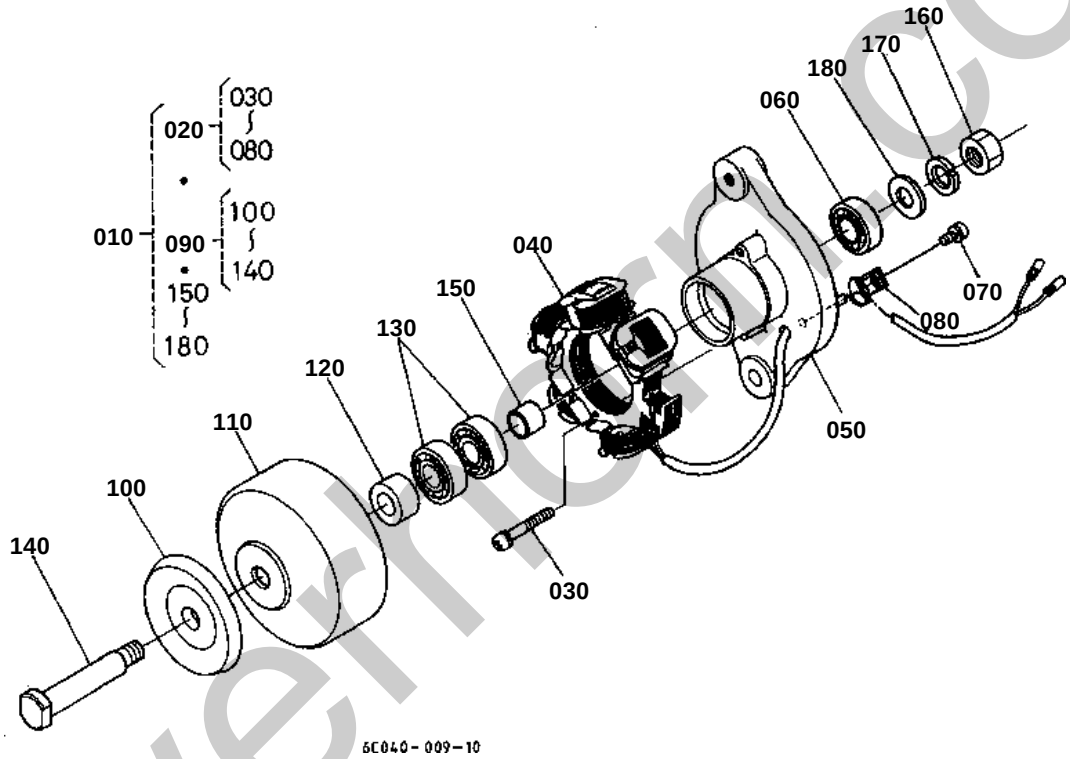

silverhorse.co.uk

DYNAMO [COMPONENT PARTS]

↔ Interchangeable; ≠ not interchangeable; ← new for old; → old for new

REF.No	Part No.	Description	Q'ty	S.No.	I/C	REMARKS	Weight (kgf)	Weight (lb)
010	6C040-59250	ASSY DYNAMO	1				1.33	2.926
020	6C040-59260	COMP.STATOR	1				0.55	1.21
030	15261-93010	SCREW ROUND HEAD	2				0.003	0.0066
040	15531-64292	STATOR	1				0.29	0.638
050	6C040-82880	PLATE	1				0.267	0.5874
060	15531-74180	BEARING BALL	1				0.04	0.088
070	15531-93010	SCREW ROUND HEAD	1				0.002	0.0044
080	15531-64190	CLAMP CORD	1				0.005	0.011
090	6C040-59270	COMP.FLYWHEEL	1				0.75	1.65
100	15531-64110	PULLEY	1				0.15	0.33
110	6C040-82850	FLYWHEEL DYNAMO	1				0.48	1.056
120	6C040-82860	COLLAR	1				0.014	0.0308
130	15531-74180	BEARING BALL	2				0.04	0.088
140	6C040-82870	SHAFT	1				0.075	0.165
150	15261-64150	COLLAR	1				0.02	0.044
160	15261-92030	NUT	1				0.01	0.022
170	15261-94070	WASHER SPRING	1				0.003	0.0066
180	15261-94020	WASHER PLAIN	1				0.007	0.0154

silverhorn.co.uk

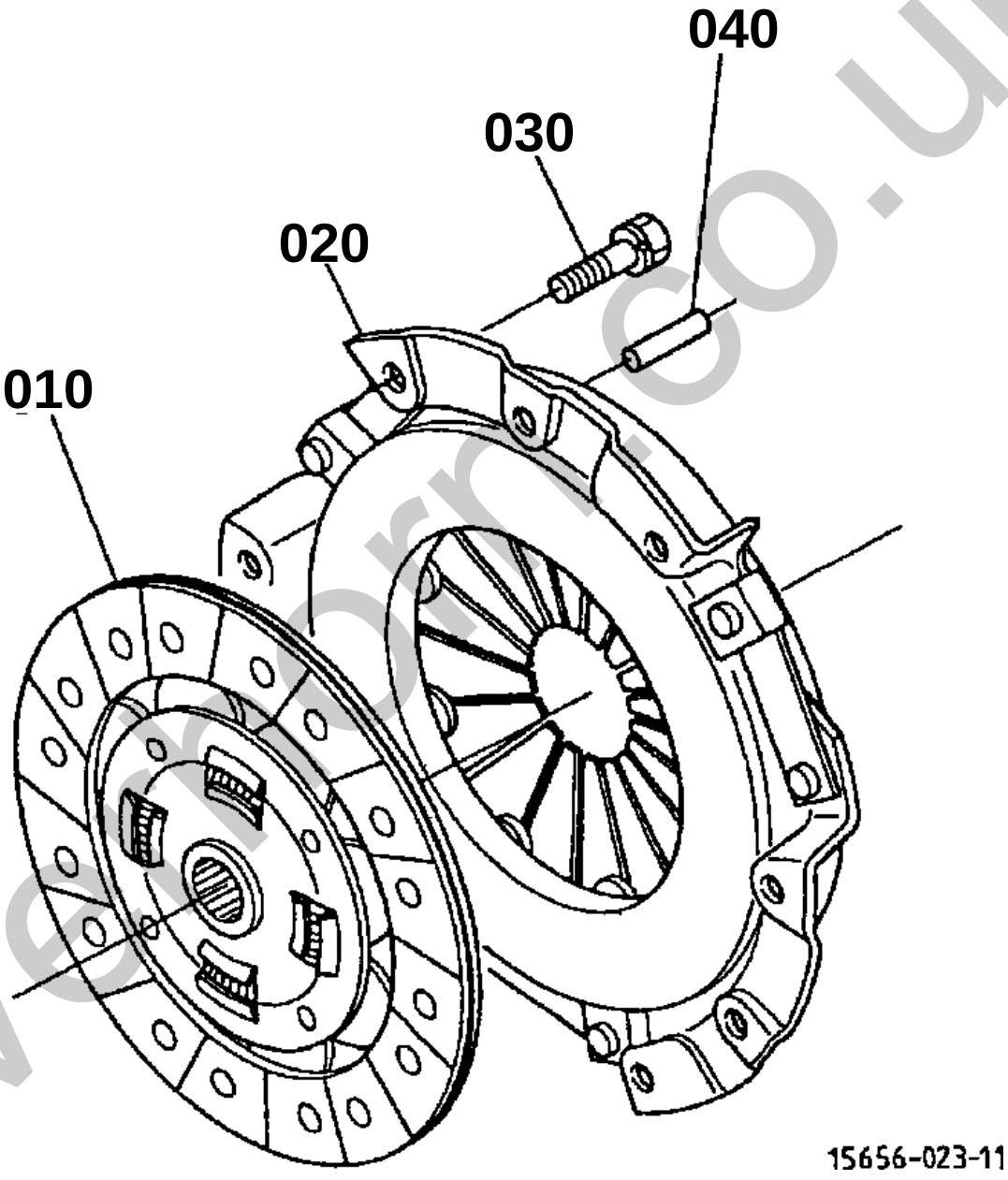

silvermorn.co.uk

CLUTCH

↔ Interchangeable; ≠ not interchangeable; ← new for old; → old for new

REF.No	Part No.	Description	Q'ty	S.No.	I/C	REMARKS	Weight (kgf)	Weight (lb)
010	6C090-13400	COMP.DISK CLUTCH	1				0.92	2.024
020	6C090-13300	ASSY PLATE PRESSURE	1				2.3	5.06
030	01123-60816	BOLT	6				0.01	0.022
040	05012-00816	PIN STRAIGHT	3				0.007	0.0154

silverhorn.co.uk

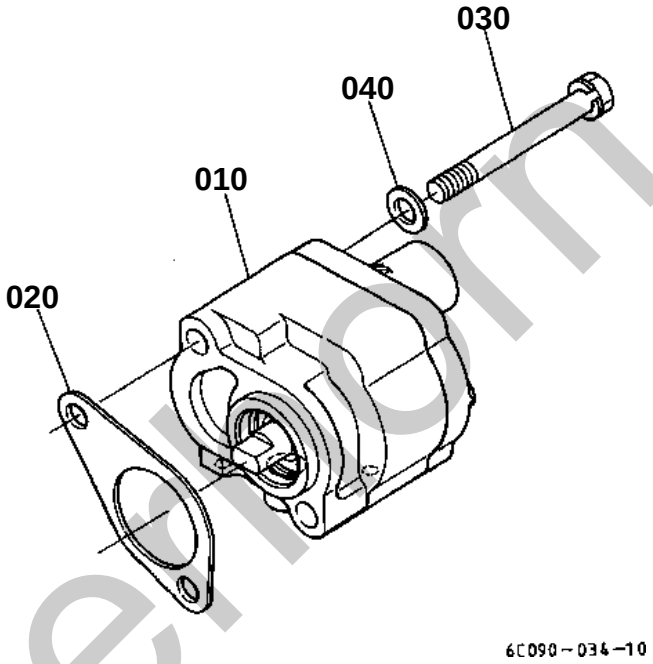

silverthorn.co.uk

↔ Interchangeable; ≠ not interchangeable; ← new for old; → old for new

REF.No	Part No.	Description	Q'ty	S.No.	I/C	REMARKS	Weight (kgf)	Weight (lb)
010	6C090-36300	ASSY PUMP HYDRAULIC	1			REFER TO L.NO.0D15-L0 FOR COMPONENTS.	1.2	2.64
020	15841-83112	GASKET	1				0.002	0.0044
030	01123-50880	BOLT	2				0.03	0.066
040	04013-60080	WASHER PLAIN	2				0.002	0.0044

silverhorn.co.uk

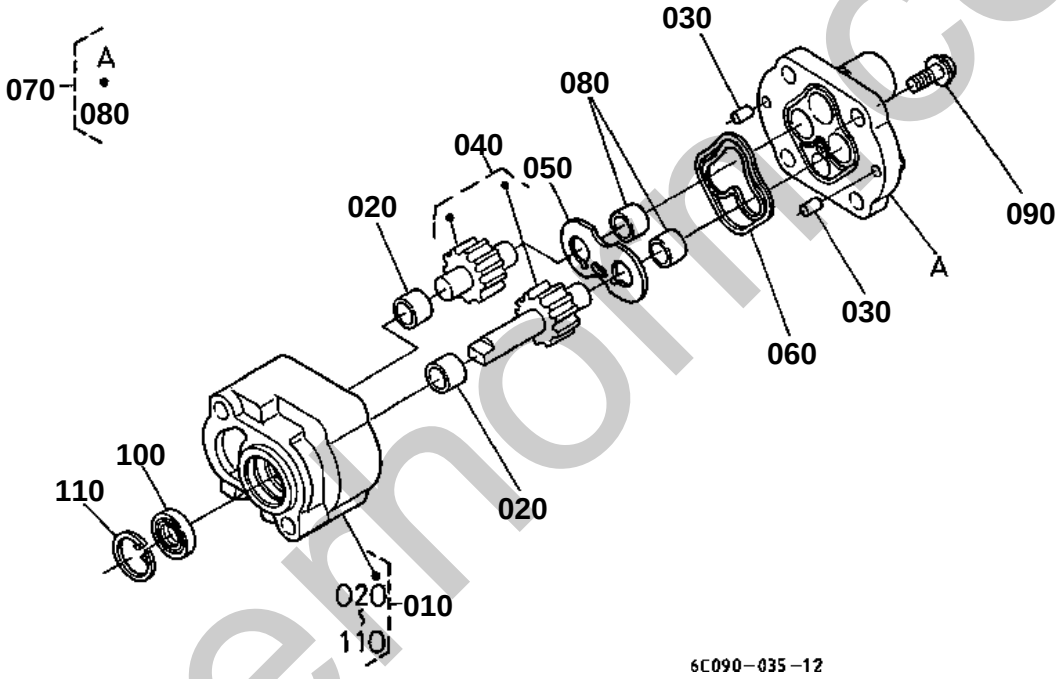

silvermoncco.uk

HYDRAULIC GEAR PUMP [COMPONENT PARTS]

↔ Interchangeable; ≠ not interchangeable; ← new for old; → old for new

REF.No	Part No.	Description	Q'ty	S.No.	I/C	REMARKS	Weight (kgf)	Weight (lb)
010	6C090-36300	ASSY PUMP HYDRAULIC	1				1.2	2.64
020	6A100-37230	BUSH	2				0.005	0.011
030	05012-00814	PIN STRAIGHT	2				0.006	0.0132
040	6C090-37200	COMP.GEAR HYD.PUMP	1	<=798015			0	0
040	6C090-37202	COMP.GEAR HYD.PUMP	1	>=798016	≠		0.3	0.66
050	6C040-36350	PLATE SIDE	1	<=781718			0.023	0.0506
050	6C040-36352	PLATE SIDE	1	>=781719	≠		0.023	0.0506
060	6C040-36342	RING DOUBLE	1				0.003	0.0066
070	6A100-37402	COMP.COVER	1				0.23	0.506
080	6A100-37230	BUSH	2				0.005	0.011
090	01754-51030	BOLT FLANGE	2				0.03	0.066
100	31381-76390	SEAL OIL	1				0.01	0.022
110	04611-00300	CIR CLIP INTERNAL	1				0.004	0.0088

silverhorn.co.uk

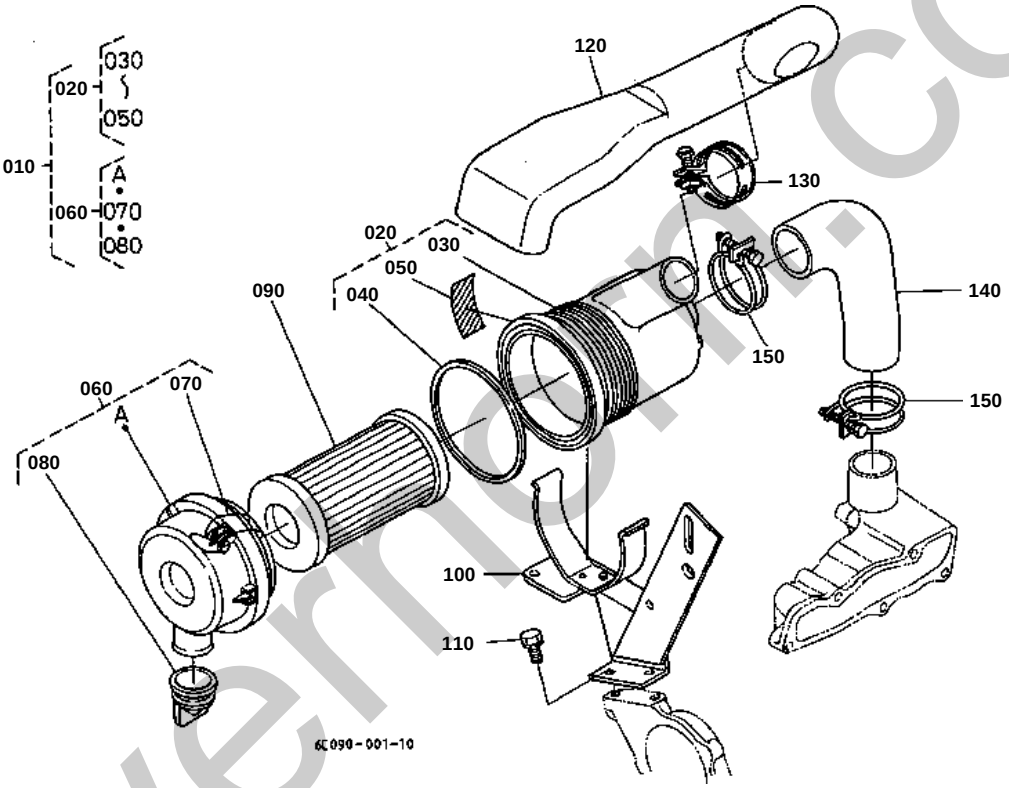

silvermoon.co.uk

AIR CLEANER

↔ Interchangeable; ≠ not interchangeable; ← new for old; → old for new

REF.No	Part No.	Description	Q'ty	S.No.	I/C	REMARKS	Weight (kgf)	Weight (lb)
010	6C090-58200	ASSY CLEANER AIR	1				0.61	1.342
020	6C090-82510	ASSY BODY A/C	1				0.22	0.484
030	6A100-82520	BODY AIR CLEANER	1				0.23	0.506
040	6A100-82530	GASKET	1				0.03	0.066
050	67980-82620	LABEL CAUTION	1			ENGLISH	0.001	0.0022
050	6C021-92130	LABEL AIR CLEANER	1			FRENCH	0.001	0.0022
060	6A100-82550	ASSY COVER A/C	1				0.179	0.3938
070	6A100-82570	SPRING	2				0.005	0.011
080	67980-82580	VALVE UNLOADER	1				0.011	0.0242
090	6A100-82630	ASSY ELEMENT	1				0.24	0.528
100	6C090-58230	BRACKET AIR CLEANER	1				0.67	1.474
110	01023-50616	BOLT	2				0.005	0.011
120	6C090-58250	HOSE INLET	1				0.13	0.286
130	15261-11720	BAND PIPE	1				0.03	0.066
140	6C090-58260	HOSE INLET	1				0.15	0.33
150	67955-58260	BAND AIR CLEANER	2				0.028	0.0616

silverhorn.co.uk

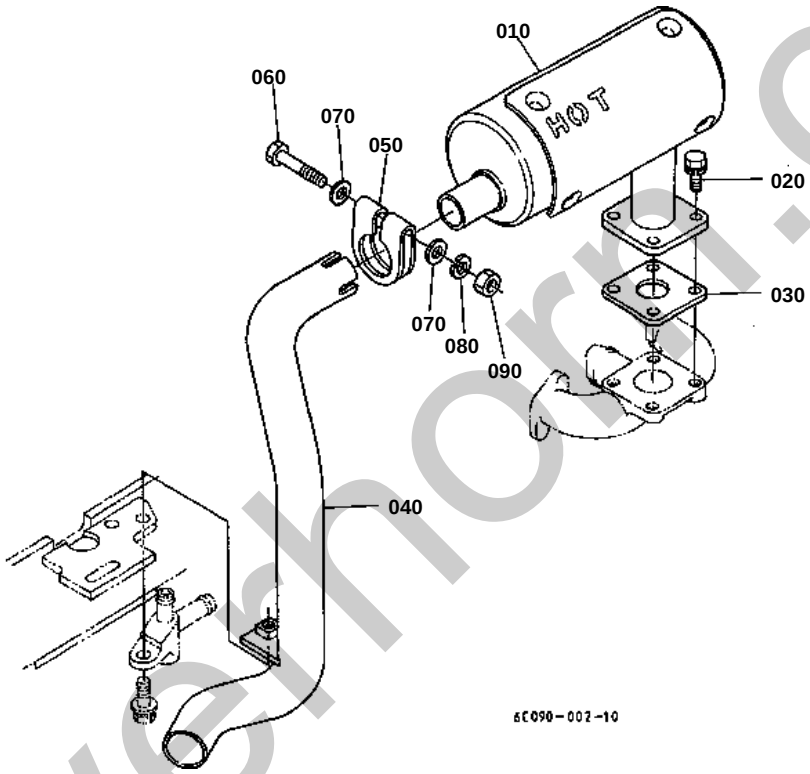

silverhorn.co.uk

MUFFLER

↔ Interchangeable; ≠ not interchangeable; ← new for old; → old for new

REF.No	Part No.	Description	Q'ty	S.No.	I/C	REMARKS	Weight (kgf)	Weight (lb)
010	6C090-58400	COMP.MUFFLER	1				2.1	4.62
020	01123-50820	BOLT	4				0.011	0.0242
030	15263-12370	GASKET MUFFLER NA	1				0.015	0.033
040	6C090-58420	PIPE EXHAUST	1				0.535	1.177
050	15221-12433	CLAMP MUFFER PIPE	1				0.05	0.11
060	01153-50865	BOLT	1				0.025	0.055
070	04013-60080	WASHER PLAIN	2				0.002	0.0044
080	04512-60080	WASHER SPRING	1				0.002	0.0044
090	02114-50080	NUT	1				0.005	0.011

silverhorn.co.uk

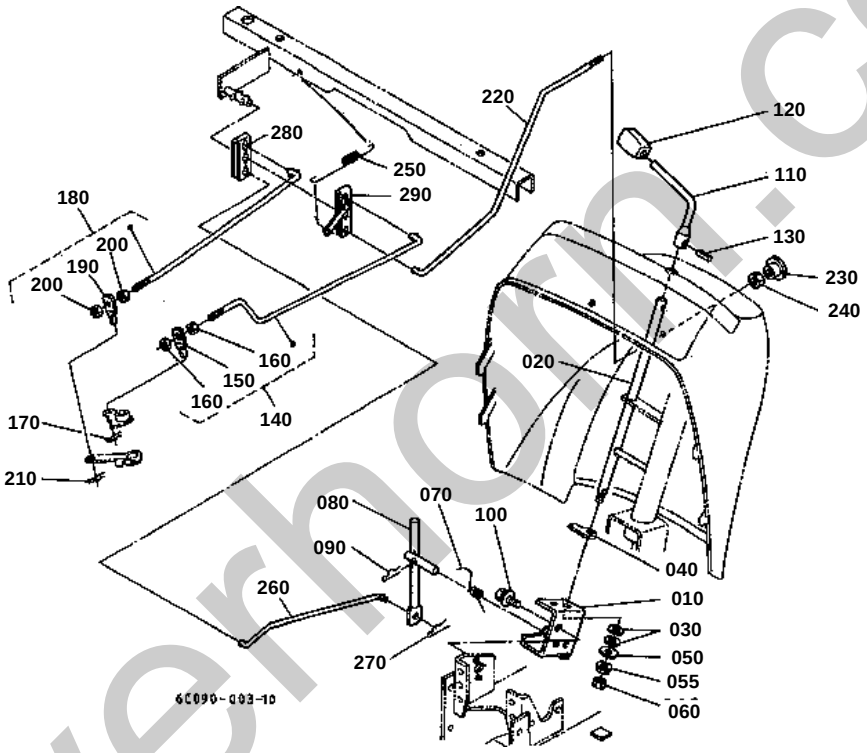

silverhorn.co.uk

ACCELERATOR LEVER

↔ Interchangeable; ≠ not interchangeable; ← new for old; → old for new

REF.No	Part No.	Description	Q'ty	S.No.	I/C	REMARKS	Weight (kgf)	Weight (lb)
010	6C040-43212	BRACKET ACCEL.	1				0.163	0.3586
020	6C040-43220	ROD ACCEL.	1				0.35	0.77
030	66116-51530	SPRING PLATE	2				0.004	0.0088
040	6C040-43250	ARM ACCELERATOR	1				0.04	0.088
050	04015-60080	WASHER PLAIN	1				0.01	0.022
055	02751-50080	NUT FLANGE	1				0.006	0.0132
060	02156-50080	NUT	1				0.004	0.0088
070	6C040-43290	SPRING	1				0.005	0.011
080	6C050-43230	LINK ACCEL.	1				0.135	0.297
090	05525-61000	PIN SNAP	1				0.002	0.0044
100	01125-60820	BOLT	1				0.015	0.033
110	6C040-43244	LEVER ACCEL	1				0.115	0.253
120	TA040-49873	GRIP	1				0.024	0.0528
130	05411-00520	PIN SPRING	1				0.002	0.0044
140	6C090-43220	ASSY ROD ENGINE STOP	1				0.07	0.154
150	6C090-43280	CONNECTOR	1				0.004	0.0088
160	02014-50060	NUT	2				0.003	0.0066
170	05525-50800	PIN SNAP	1				0.001	0.0022
180	6C090-43300	ASSY ROD RELEASE	1				0.07	0.154
190	6C090-43280	CONNECTOR	1				0.004	0.0088
200	02014-50060	NUT	2				0.003	0.0066
210	05525-50800	PIN SNAP	1				0.001	0.0022
220	6C090-43210	ROD ENGINE STOP	1	<=11014			0	0
220	6C090-43214	ROD ENGINE STOP	1	>=11015	←		0.5	1.1
230	35260-17160	KNOB	1				0.015	0.033
240	02014-50060	NUT	1				0.003	0.0066
250	6C090-43310	SPRING	1				0.012	0.0264
260	6C090-43240	ROD RELEASE	1				0.04	0.088
270	05525-50600	PIN SNAP	2				0	0
280	6C090-43250	LEVER RELEASE	1				0.05	0.11
290	6C090-43260	LEVER ENGINE STOP	1				0.063	0.1386

silverhorn.co.uk

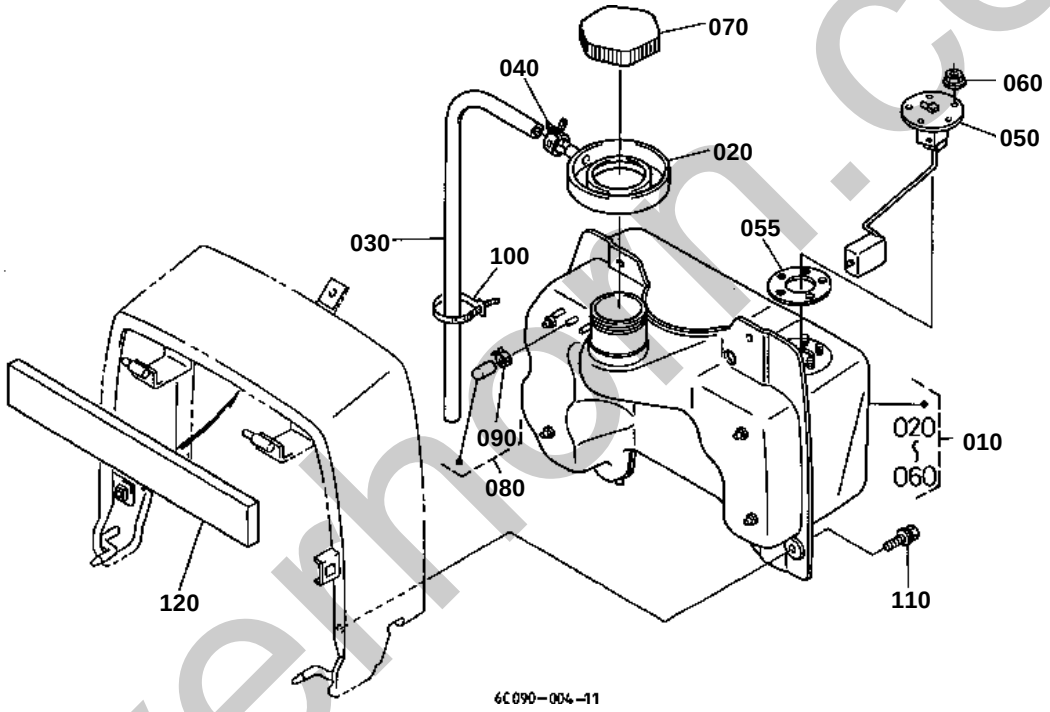

silverhorn.co.uk

FUEL TANK

↔ Interchangeable; ≠ not interchangeable; ← new for old; → old for new

REF.No	Part No.	Description	Q'ty	S.No.	I/C	REMARKS	Weight (kgf)	Weight (lb)
010	6C090-54700	ASSY TANK FUEL	1	<=12694			0	0
010	6C090-54704	ASSY TANK FUEL	1	>=12695	≠		2.5	5.5
020	6C090-54740	TRAY FUEL	1				0.04	0.088
030	6C090-54760	PIPE	1				0.14	0.308
040	6C090-54780	CLAMP	1				0.007	0.0154
050	6C090-54750	GAUGE FUEL	1				0.12	0.264
055	6A320-85810	GASKET GAUGE	1				0.005	0.011
060	6C090-54860	NUT FLANGE	5				0.003	0.0066
070	6A100-54910	ASSY CAP FUEL TANK	1				0.05	0.11
080	6C090-54830	ASSY CAP FUEL TANK	1				0.004	0.0088
090	6C090-54840	CLAMP HOSE	1				0.001	0.0022
100	55311-41260	BAND CORD	1				0.007	0.0154
110	01127-50820	BOLT	4				0.02	0.044
120	6C090-54790	SPONGE	1				0.018	0.0396

silverhorn.co.uk

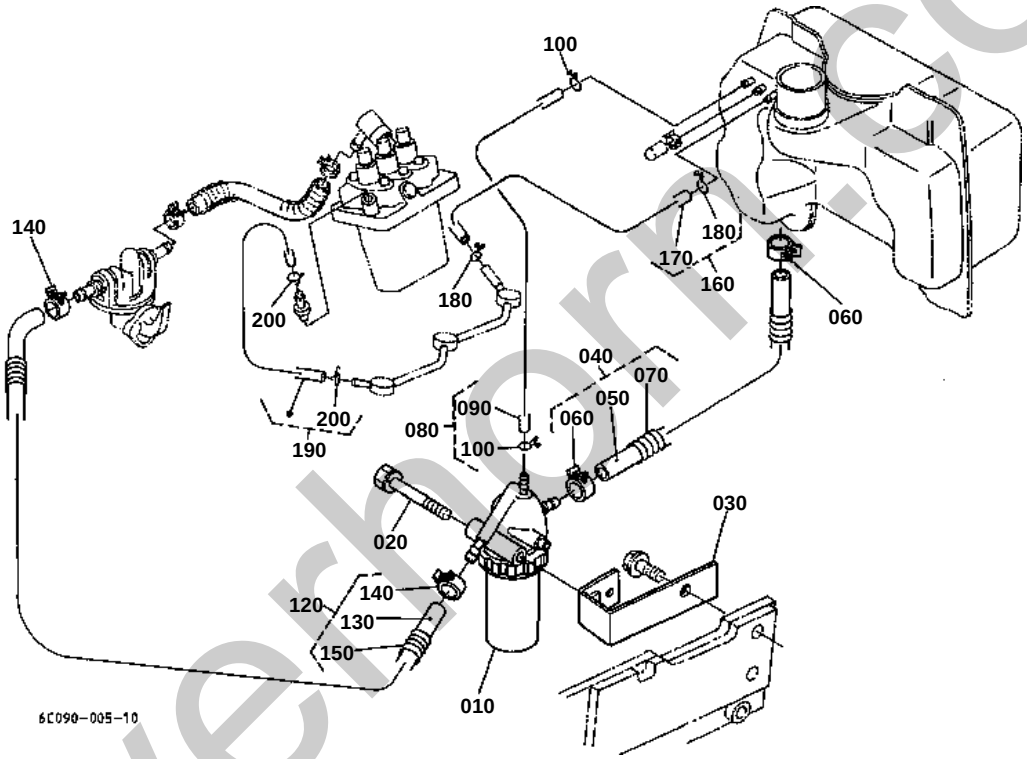

silverhorn.co.uk

FUEL PIPE

↔ Interchangeable; ≠ not interchangeable; ← new for old; → old for new

REF.No	Part No.	Description	Q'ty	S.No.	I/C	REMARKS	Weight (kgf)	Weight (lb)
010	15751-43010	ASSY FILTER FUEL	1			REFER TO L.NO.0B16-L0 FOR COMPONENTS.	0.41	0.902
020	01123-50865	BOLT	1				0.028	0.0616
030	6C090-58310	STAY FUEL FILTER	1				0.156	0.3432
040	6C090-54810	ASSY TUBE FUEL	1				0	0
050	09661-70260	TUBE FUEL	1				0.033	0.0726
060	14911-42750	CLIP PIPE	2				0.002	0.0044
070	67111-58320	SPRING PIPE PROTECT.	1				0.02	0.044
080	6C090-54850	ASSY PIPE AIR VENT	1				0.026	0.0572
090	09661-40460	TUBE FUEL	1				0.024	0.0528
100	14971-42750	CLIP PIPE	2				0.001	0.0022
120	6C040-54810	ASSY TUBE FUEL	1				0.048	0.1056
130	09661-70300	TUBE FUEL	1				0.04	0.088
140	14911-42750	CLIP PIPE	2				0.002	0.0044
150	67111-58320	SPRING PIPE PROTECT.	1				0.02	0.044
160	6C090-59440	ASSY PIPE AIR VENT	1				0.017	0.0374
170	09661-40260	TUBE FUEL	1				0.015	0.033
180	14971-42750	CLIP PIPE	2				0.001	0.0022
190	15841-42500	ASSY PIPE OVER FLOW	1				0.015	0.033
200	14971-42750	CLIP PIPE	2				0.001	0.0022

silverhorn.co.uk

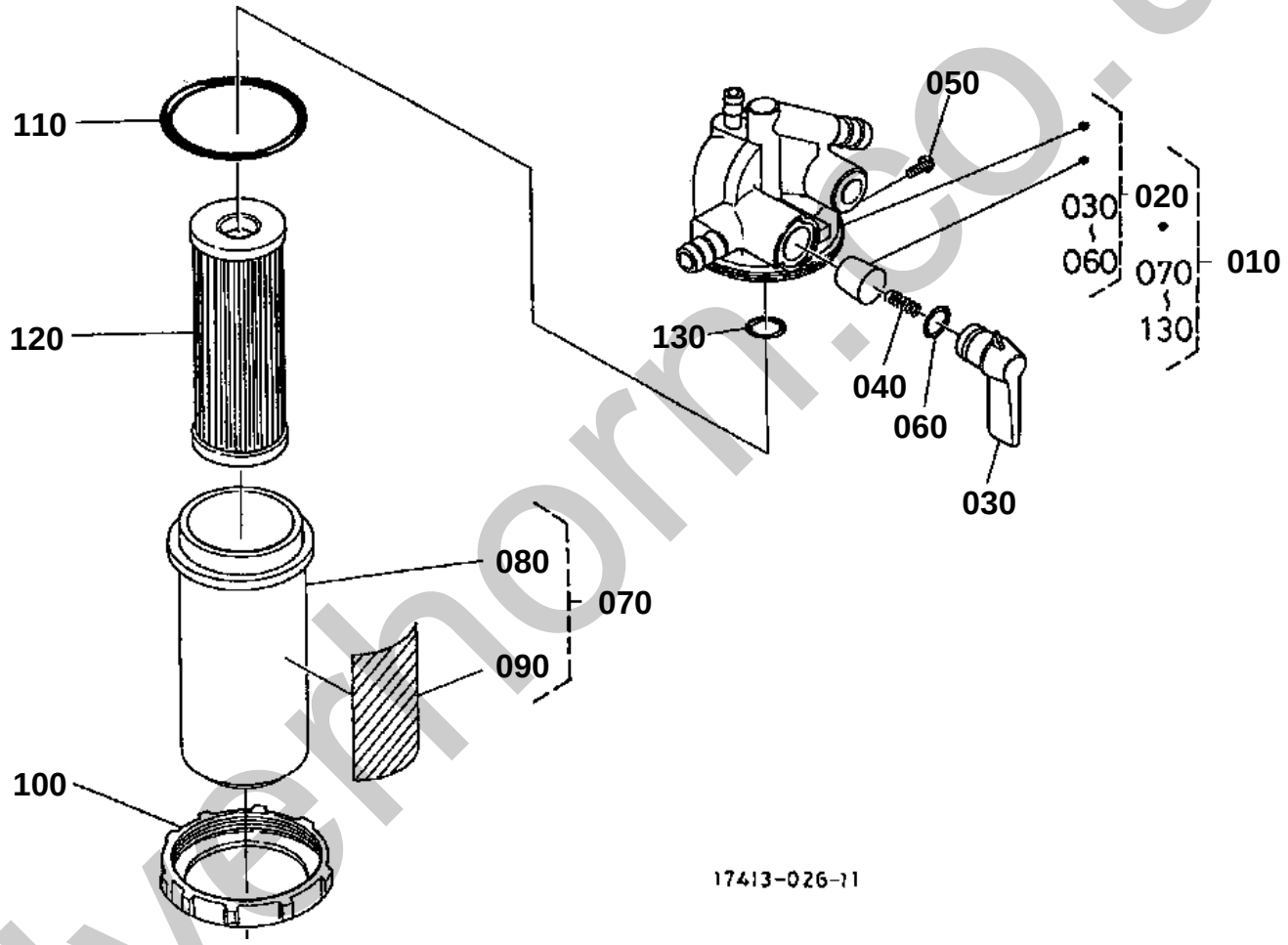

silverhorn.co.uk

FUEL FILTER [COMPONENT PARTS]

↔ Interchangeable; ≠ not interchangeable; ← new for old; → old for new

REF.No	Part No.	Description	Q'ty	S.No.	I/C	REMARKS	Weight (kgf)	Weight (lb)
010	15751-43010	ASSY FILTER FUEL	1				0.41	0.902
020	15531-43110	COMP.BODY COCK	1				0.255	0.561
030	14301-43522	LEVER COCK	1				0.024	0.0528
040	14301-43820	SPRING VALVE	1				0.001	0.0022
050	14301-43830	SCREW SET	1				0.001	0.0022
060	14301-43840	O RING LEVER	1				0.001	0.0022
070	19204-43100	ASSY CUP FILTER	1				0.02	0.044
080	15393-43580	CUP FILTER	1				0.01	0.022
090	16689-88430	LABEL FUEL	1				0.001	0.0022
100	14301-43590	RING RETAINING	1				0.054	0.1188
110	14301-43650	O RING FILTER CUP	1				0.001	0.0022
120	15231-43560	ASSY ELEMENT	1				0.03	0.066
130	14301-43570	O RING FILTER	1				0.001	0.0022

silverhorn.co.uk

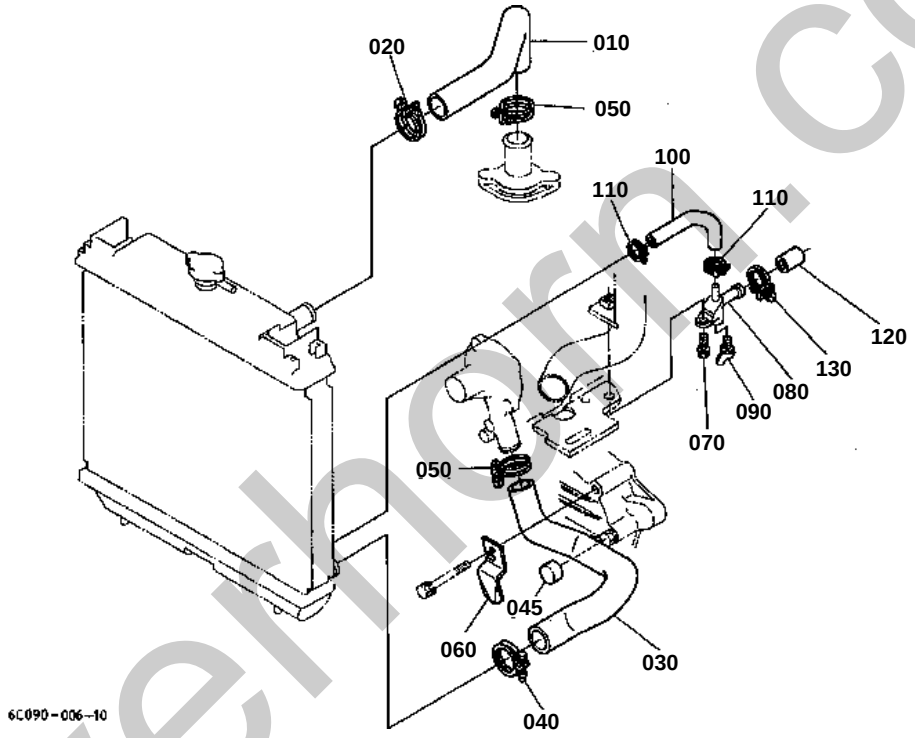

silverthorn.co.uk

WATER PIPE

↔ Interchangeable; ≠ not interchangeable; ← new for old; → old for new

REF.No	Part No.	Description	Q'ty	S.No.	I/C	REMARKS	Weight (kgf)	Weight (lb)
010	6C090-58630	HOSE WATER	1				0.09	0.198
020	67955-58630	CLAMP HOSE	1				0.025	0.055
030	6C090-58570	HOSE WATER	1				0.14	0.308
040	67955-58630	CLAMP HOSE	1				0.025	0.055
045	3F760-56750	CAP	1				0.001	0.0022
050	09318-89030	CLAMP HOSE	2				0.02	0.044
060	6C090-58642	CLAMP WATER HOSE	1				0	0
070	01125-50822	BOLT	1				0.015	0.033
080	6C040-58650	COCK	1				0.017	0.0374
090	55364-82110	COCK DRAIN	1				0.005	0.011
100	6C090-58680	HOSE DRAIN	1				0.025	0.055
110	6C040-58720	CLAMP HOSE	2				0.017	0.0374
120	6C090-58690	CAP DRAIN	1				0.007	0.0154
130	6C040-58730	CLAMP HOSE	1				0.017	0.0374

silverhorn.co.uk

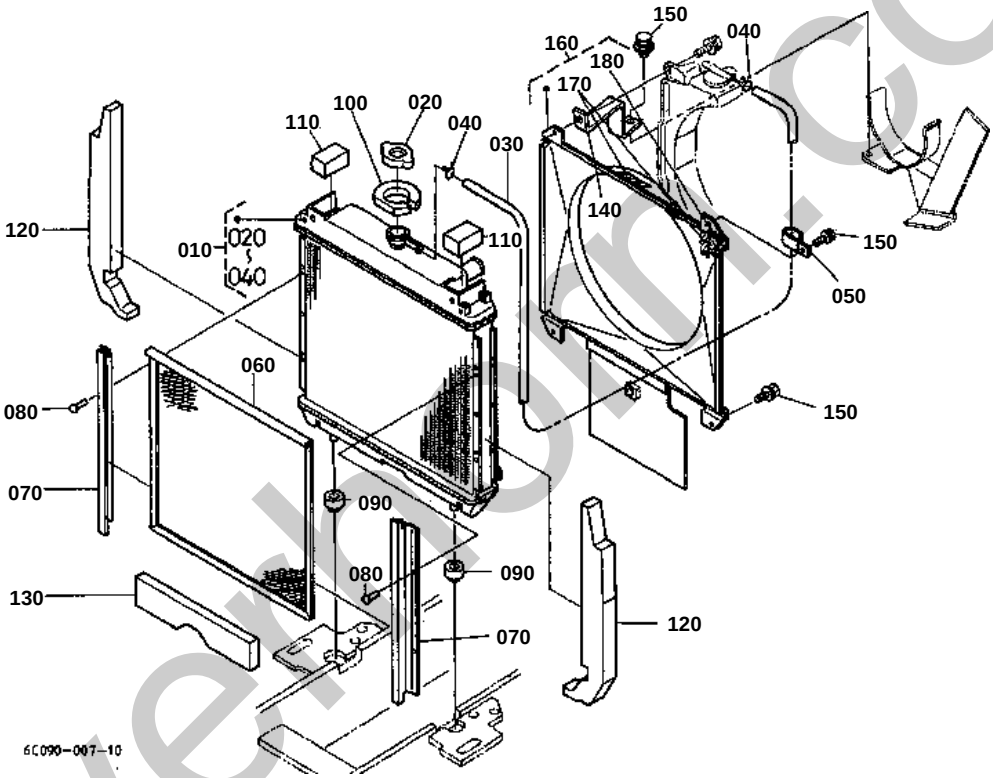

silverton.co.uk

RADIATOR

↔ Interchangeable; ≠ not interchangeable; ← new for old; → old for new

REF.No	Part No.	Description	Q'ty	S.No.	I/C	REMARKS	Weight (kgf)	Weight (lb)
010	6C090-58500	ASSY RADIATOR	1				0	0
020	6C040-58660	ASSY CAP RADIATOR	1				0.043	0.0946
030	6C090-58670	HOSE OVER FLOW	1				0.033	0.0726
040	6C040-58710	CLIP	2				0.002	0.0044
050	15272-67590	CLAMP CORD	1				0.004	0.0088
060	6C090-58530	NET RADIATOR	1				0.3	0.66
070	6C090-58540	GUIDE	2				0.107	0.2354
080	54102-24410	RIVET	4				0.001	0.0022
090	6C040-58580	CUSHION RADIATOR	2				0.021	0.0462
100	6C090-54520	SPONGE	1				0.004	0.0088
110	6C090-54490	SPONGE	2				0.004	0.0088
120	6C090-54450	TAPE RADIATOR	2				0	0
130	6C090-54470	TAPE RADIATOR	1				0.017	0.0374
140	6C090-58590	STAY RADIATOR	1				0.13	0.286
150	01025-50616	BOLT	3				0.005	0.011
160	6C090-58600	KIT SHROUD FAN	1				0	0
170	6C090-49580	LABEL FAN BELT	2				0.005	0.011
180	6C090-49590	LABEL MUFFLER	1				0.005	0.011

silverhorn.co.uk

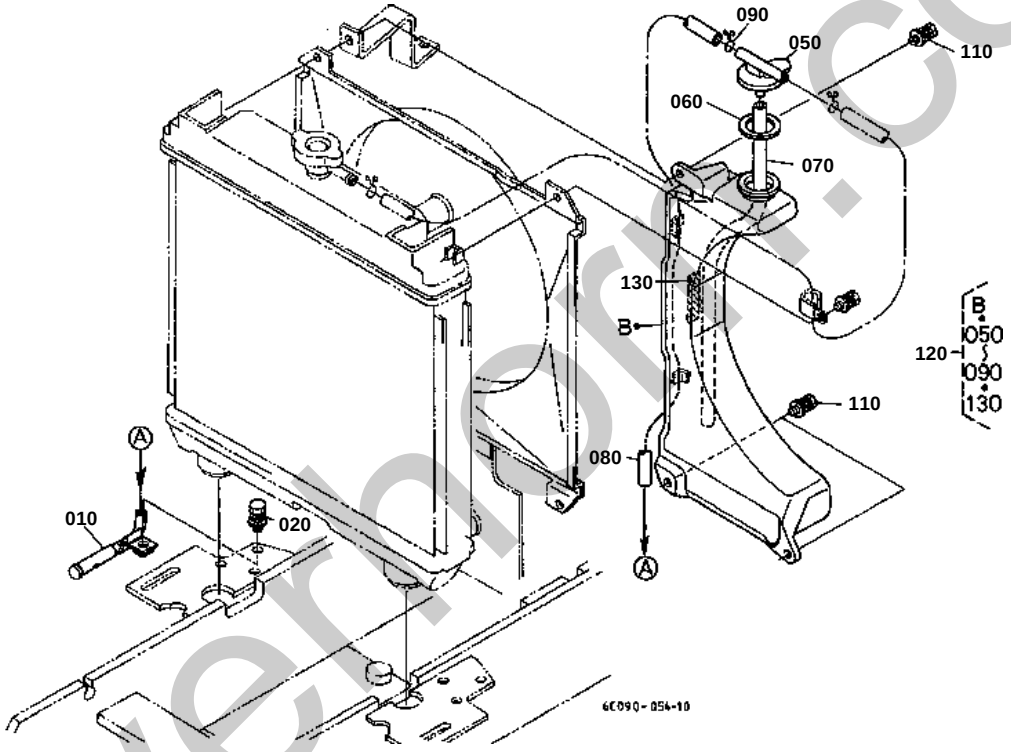

silverhorn.co.uk

RESERVE TANK

↔ Interchangeable; ≠ not interchangeable; ← new for old; → old for new

REF.No	Part No.	Description	Q'ty	S.No.	I/C	REMARKS	Weight (kgf)	Weight (lb)
010	6C090-58750	HORN WHISTLE	1				0.01	0.022
020	01125-50818	BOLT	1				0.015	0.033
050	6C090-58820	CAP	1				0.006	0.0132
060	6C090-58830	GASKET	1				0.001	0.0022
070	6C090-58840	HOSE	1				0.034	0.0748
080	6C090-58850	HOSE	1				0.042	0.0924
090	6C040-58710	CLIP	1				0.002	0.0044
110	01025-50620	BOLT	3				0.02	0.044
120	6C090-99150	KIT TANK RESERVE	1				0.35	0.77
130	6C090-49580	LABEL FAN BELT	1				0.005	0.011

silverhorn.co.uk

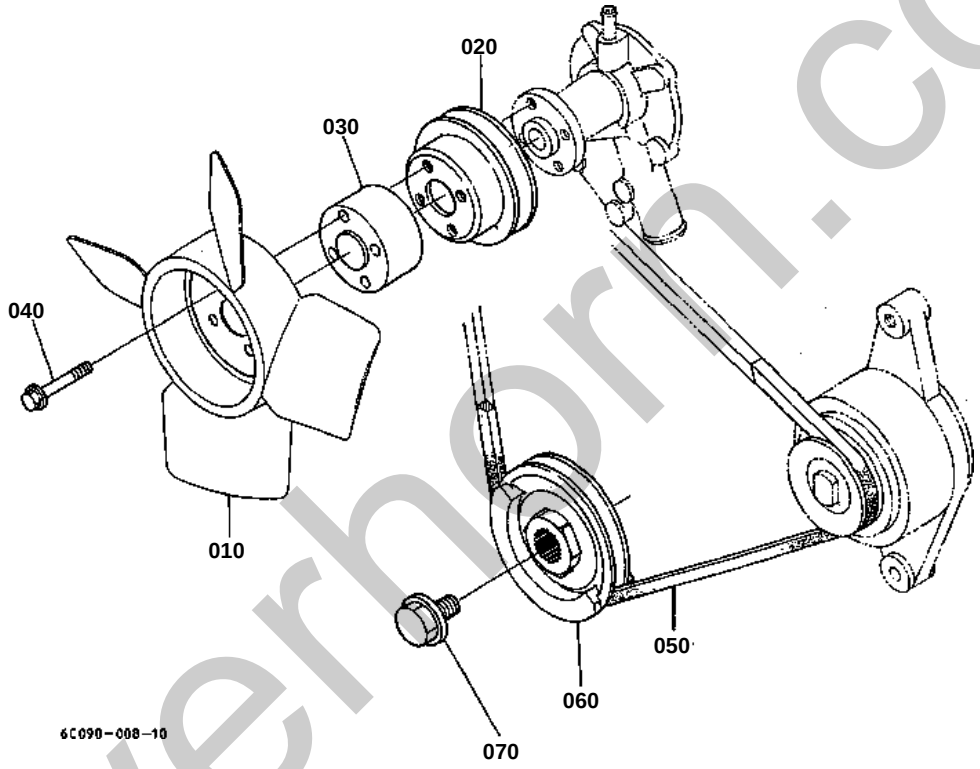

silverhorn.co.uk

FAN

↔ Interchangeable; ≠ not interchangeable; ← new for old; → old for new

REF.No	Part No.	Description	Q'ty	S.No.	I/C	REMARKS	Weight (kgf)	Weight (lb)
010	15872-74110	FAN	1				0.25	0.55
020	15841-74250	PULLEY FAN	1				0.19	0.418
030	15679-74150	COLLAR FAN	1				0.13	0.286
040	15687-91020	BOLT FLANGE	4				0.01	0.022
050	15881-97010	V BELT	1				0.08	0.176
060	16875-74280	PULLEY FAN DRIVE	1				0.825	1.815
070	15881-91030	BOLT	1				0.06	0.132

silverhorn.co.uk

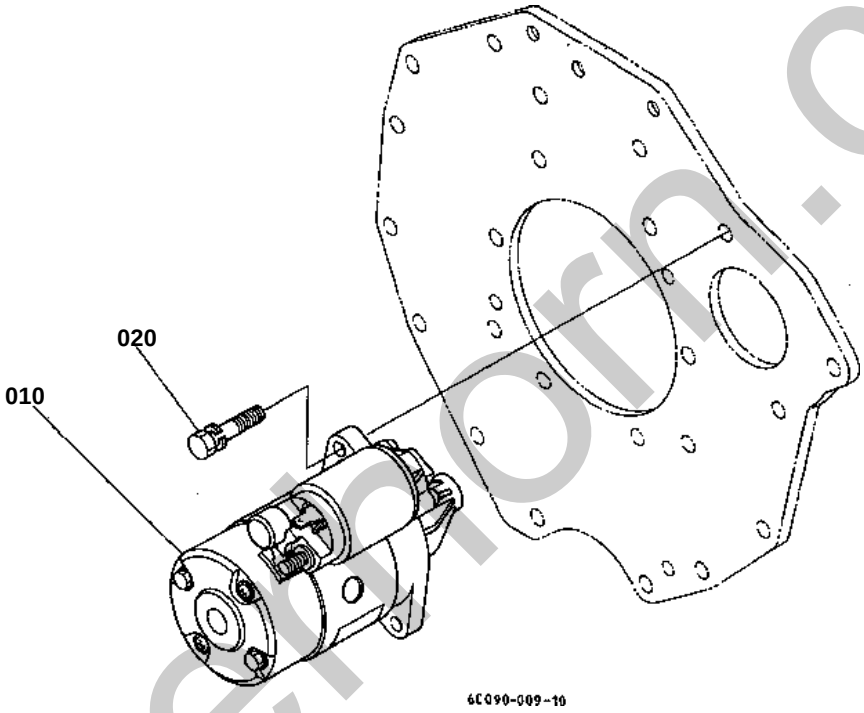

silvermorn.co.uk

↔ Interchangeable; ≠ not interchangeable; ← new for old; → old for new

REF.No	Part No.	Description	Q'ty	S.No.	I/C	REMARKS	Weight (kgf)	Weight (lb)
010	6C090-59210	ASSY STARTER	1	<=12554		REFER TO L.NO.0C04-L0 FOR COMPONENTS.	3.7	8.14
010	6C090-59300	ASSY STARTER	1	>=12555	→	REFER TO L.NO.0C04-L0 FOR COMPONENTS.	3.6	7.92
020	01123-50840	BOLT	2				0.018	0.0396

silverhorn.co.uk

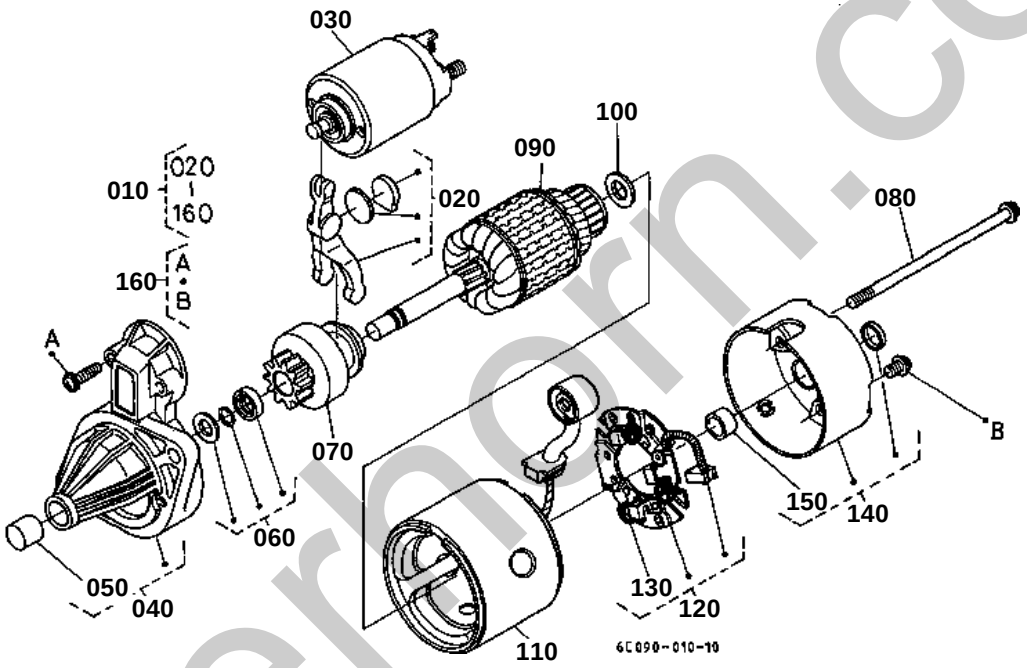

silverhorn.co.uk

↔ Interchangeable; ≠ not interchangeable; ← new for old; → old for new

REF.No	Part No.	Description	Q'ty	S.No.	I/C	REMARKS	Weight (kgf)	Weight (lb)
010	6C090-59210	ASSY STARTER	1	<=12554			3.7	8.14
010	6C090-59300	ASSY STARTER	1	>=12555	→		3.6	7.92
020	15852-63050	LEVER DRIVE	1				0.015	0.033
030	6C090-59220	SWITCH MAGNETIC	1	<=12554			0.5	1.1
030	6C090-59320	SWITCH MAGNETIC	1	>=12555	→		0.67	1.474
040	6C090-59230	FRAME DRIVE END	1	<=12554			0.27	0.594
040	6C090-59330	FRAME DRIVE END	1	>=12555	→		0.26	0.572
050	16225-63240	BEARING NEEDLE	1	<=12554			0.01	0.022
050	15852-63240	BUSH	1	>=12555	→		0.006	0.0132
060	19837-63150	STOPPER	1				0.007	0.0154
070	19837-63040	CLUTCH OVER RUNNING	1	<=12554			0.22	0.484
070	6C090-59340	CLUTCH OVER RUNNING	1	>=12555	→		0.21	0.462
080	15852-63320	BOLT	2				0.016	0.0352
090	6C090-59240	ARMATURE	1	<=12554			0.97	2.134
090	15852-63070	ARMATURE	1	>=12555	→		0.99	2.178
100	15852-63410	WASHER ADJUSTING	1				0.006	0.0132
110	6C090-59250	YOKE	1	<=12554			1.06	2.332
110	6C090-59350	YOKE	1	>=12555	→		1.06	2.332
120	15852-63380	HOLDER BRUSH	1				0.052	0.1144
130	15852-63390	SPRING BRUSH	3				0.002	0.0044
140	15852-63200	FRAME END	1				0.2	0.44
150	15852-63250	BUSH	1				0.006	0.0132
160	15852-93310	SCREW PAN-HEAD	1				0.02	0.044

silverhorn.co.uk

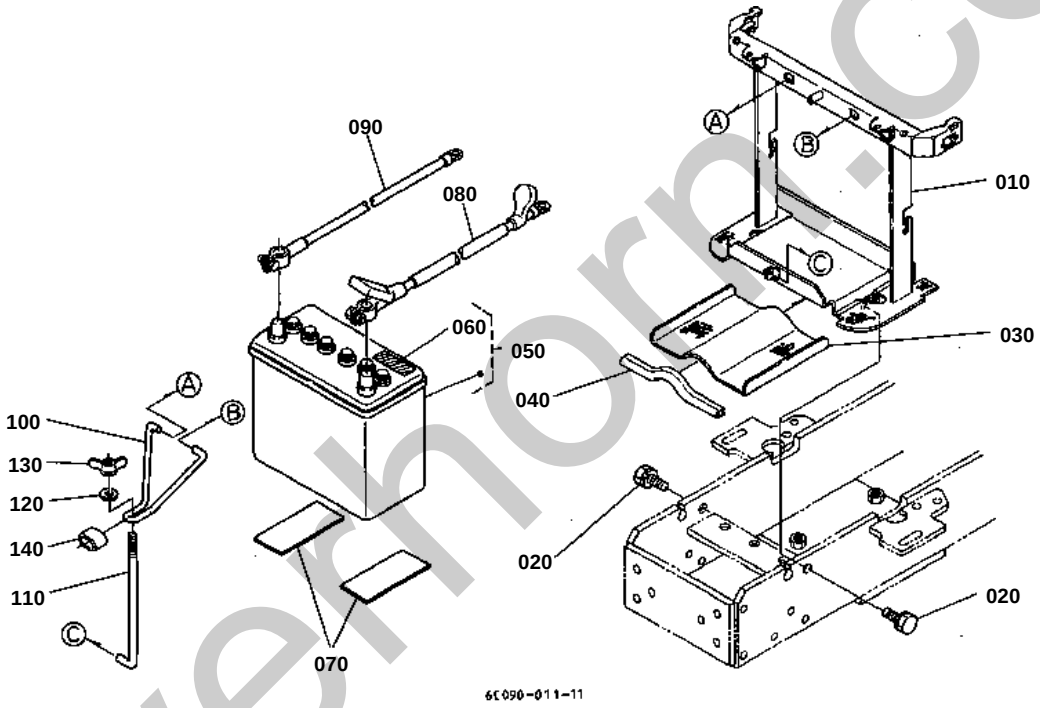

silverhorn.co.uk

BATTERY

↔ Interchangeable; ≠ not interchangeable; ← new for old; → old for new

REF.No	Part No.	Description	Q'ty	S.No.	I/C	REMARKS	Weight (kgf)	Weight (lb)
010	6C090-51220	BRACKET BATTERY	1	<=16485			0	0
010	6C090-51224	BRACKET BATTERY	1	>=16486	←		2.45	5.39
020	01133-51025	BOLT	2				0.023	0.0506
030	6C090-51260	NET	1				0.26	0.572
040	76650-42520	TRIM DUSTPROOF	1				0.03	0.066
050	6C040-55510	ASSY BATTERY	1				0	0
060	6C040-55590	LABEL BATTERY	1			ENGLISH	0.001	0.0022
060	6C021-92120	LABEL BATTERY	1			FRENCH	0.001	0.0022
070	34150-33220	CUSHION	2				0.015	0.033
080	6C090-55530	CORD BATTERY(+)	1				0.22	0.484
090	6C040-55540	CORD BATTERY(-)	1				0.11	0.242
100	6C090-55550	RETAINER BATTERY	1				0.005	0.011
110	6C040-55560	BOLT HOOK	1				0.038	0.0836
120	04015-60060	WASHER PLAIN	1				0.005	0.011
130	02810-50060	NUT WING	1				0.009	0.0198
140	6C040-55580	CUSHION	1				0.002	0.0044

silverhorn.co.uk

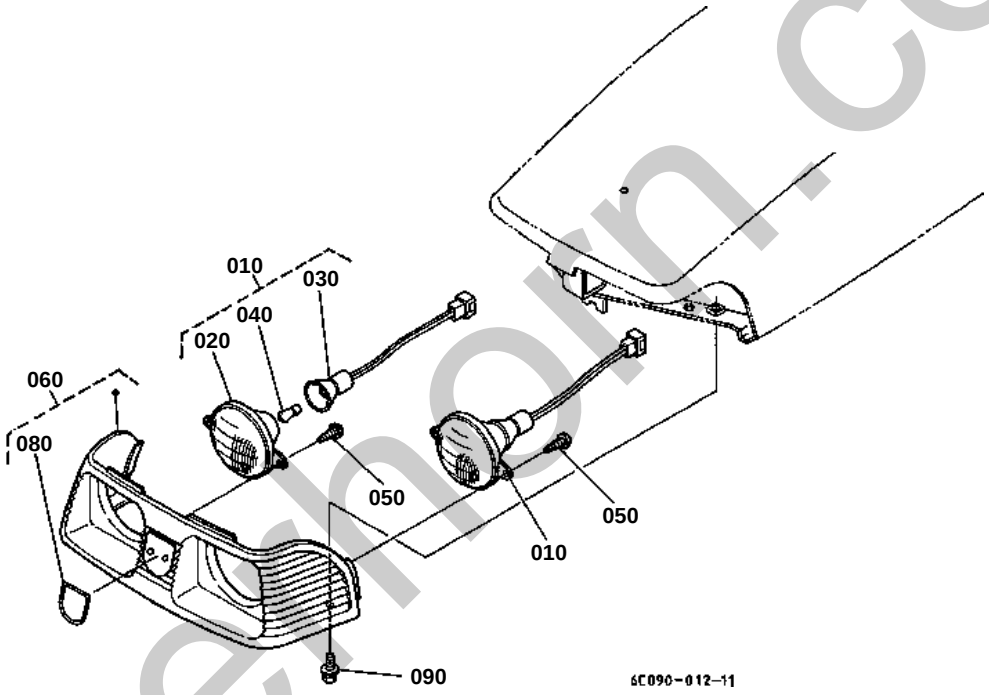

silverthorn.co.uk

HEAD LIGHT

↔ Interchangeable; ≠ not interchangeable; ← new for old; → old for new

REF.No	Part No.	Description	Q'ty	S.No.	I/C	REMARKS	Weight (kgf)	Weight (lb)
010	6C090-55610	ASSY LIGHT HEAD	2				0.13	0.286
020	66591-55610	LAMP HEAD	2				0.15	0.33
030	6C040-55630	COMP.SOCKET	2				0.019	0.0418
040	66591-55630	BULB	2				0.008	0.0176
050	03514-50512	SCREW TAPPING	4				0.003	0.0066
060	6C090-54180	ASSY GRILLE	1				0.39	0.858
080	6C090-54290	MARK MASCOT	1				0.01	0.022
090	01125-60820	BOLT	3				0.015	0.033

silverhorn.co.uk

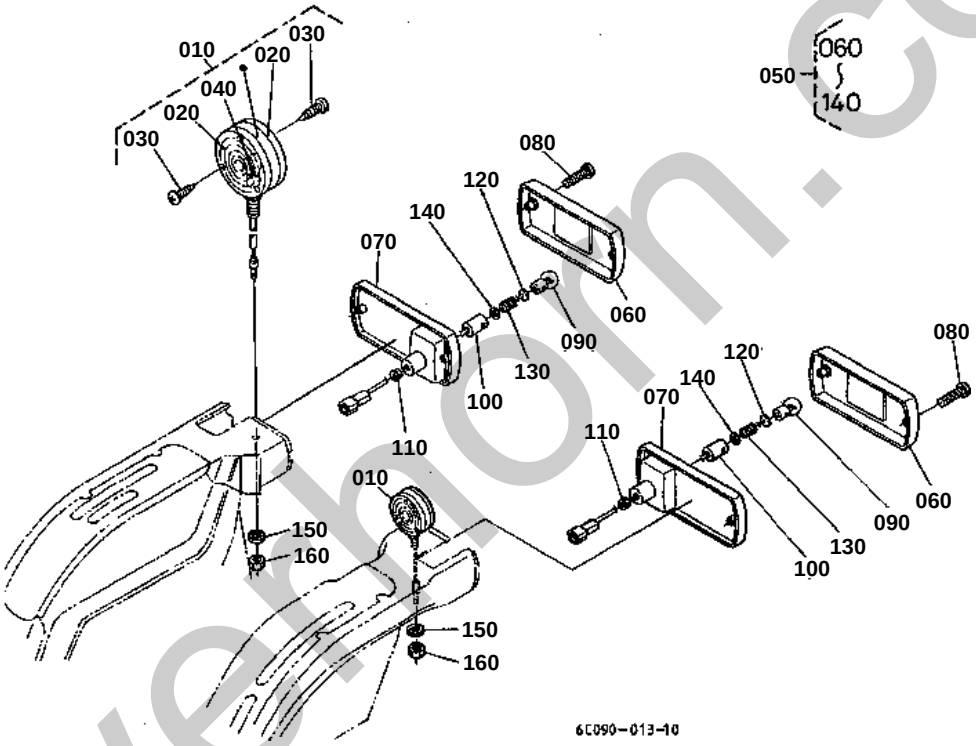

silverthorn.co.uk

HAZARD LIGHT/TAIL LIGHT

↔ Interchangeable; ≠ not interchangeable; ← new for old; → old for new

REF.No	Part No.	Description	Q'ty	S.No.	I/C	REMARKS	Weight (kgf)	Weight (lb)
010	32530-33610	ASSY LIGHT HAZARD	2				0.5	1.1
020	32530-91510	LENS HAZARD LIGHT	4				0.085	0.187
030	32530-91520	SCREW TAPPING	12				0.001	0.0022
040	32530-91530	BULB LIGHT	2				0.02	0.044
050	6C040-55490	ASSY LIGHT TAIL	2				0.21	0.462
060	6C040-92200	ASSY LENS	2				0.1	0.22
070	6C040-92120	BODY	2				0.065	0.143
080	6C040-92140	SCREW	4				0.007	0.0154
090	6C040-92150	BULB	2				0.006	0.0132
100	6C040-92160	SOCKET	2				0.007	0.0154
110	6C040-92170	BUSH RUBBER	2				0.001	0.0022
120	6C040-92180	INSULATOR	2				0.001	0.0022
130	6C040-92190	SPRING	2				0.001	0.0022
140	6C040-92210	WASHER	2				0.001	0.0022
150	04411-50100	WASHER TOOTHED	2				0.001	0.0022
160	02114-50100	NUT	2				0.005	0.011

silverhorn.co.uk

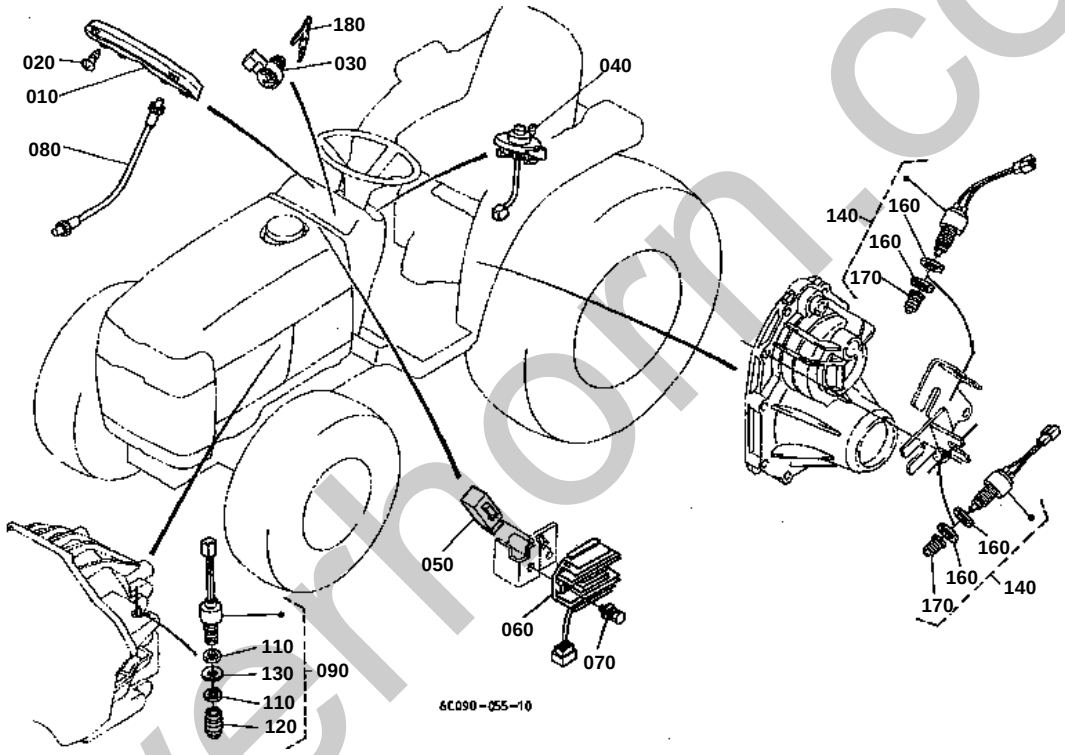

silverhorn.co.uk

↔ Interchangeable; ≠ not interchangeable; ← new for old; → old for new

REF.No	Part No.	Description	Q'ty	S.No.	I/C	REMARKS	Weight (kgf)	Weight (lb)
010	6C090-55100	ASSY METER	1			REFER TO L.NO.0C06-R0 FOR COMPONENTS.	0.77	1.694
020	03514-50420	SCREW TAPPING	6				0.002	0.0044
030	6C040-55412	SWITCH STARTER	1				0.198	0.4356
040	6C040-55424	SWITCH COMBINATION	1				0.09	0.198
050	6C040-55520	HAZARD UNIT	1				0.036	0.0792
060	RP201-53710	ASSY REGULATOR	1				0.185	0.407
070	01205-50625	BOLT	1				0.007	0.0154
080	6C040-55440	CABLE HOUR METER	1				0.2	0.44
090	6C040-55850	ASSY SWITCH SAFETY	1				0.128	0.2816
110	67111-55830	NUT SAFETY SWITCH	2				0.035	0.077
120	67111-55840	CAP SAFETY SWITCH	1				0.002	0.0044
130	6C040-55860	WASHER	1				0.007	0.0154
140	52320-42900	SWITCH SAFETY	2				0.1	0.22
160	67111-55830	NUT SAFETY SWITCH	4				0.035	0.077
170	67111-55840	CAP SAFETY SWITCH	2				0.002	0.0044
180	6C040-55432	KEY STARTER	2				0.012	0.0264

silverhorn.co.uk

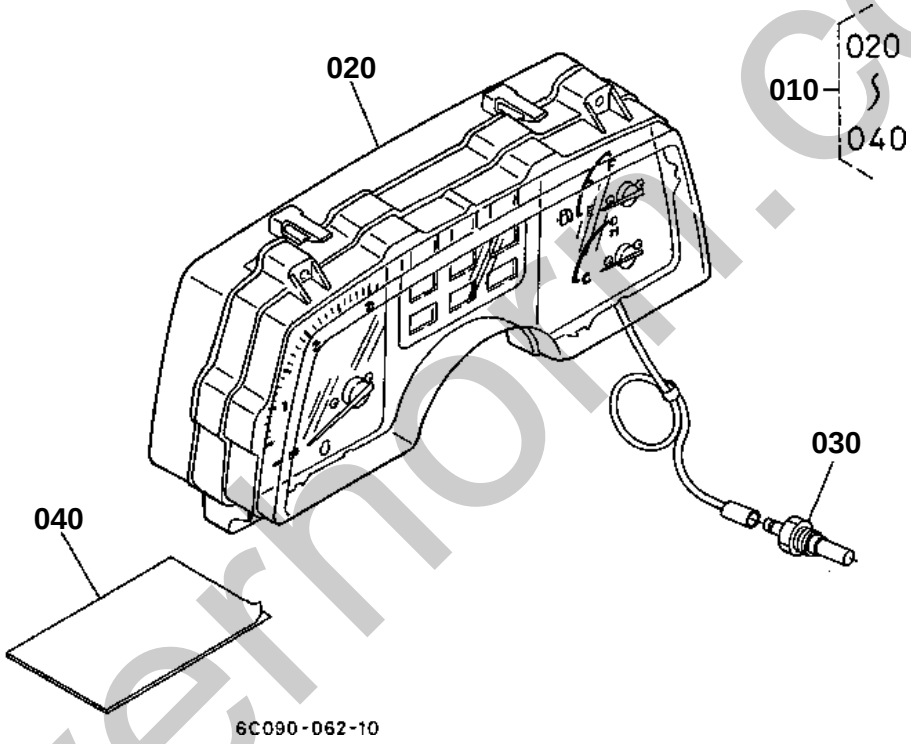

silverhorn.co.uk

METER KIT

↔ Interchangeable; ≠ not interchangeable; ← new for old; → old for new

REF.No	Part No.	Description	Q'ty	S.No.	I/C	REMARKS	Weight (kgf)	Weight (lb)
010	6C090-96500	KIT METER WATER TEMP	1				1.34	2.948
020	6C090-96520	ASSY METER	1				0.83	1.826
030	31351-32830	SENSOR THERMO	1				0.02	0.044
040	6C090-96530	MANUAL METER W/TEMP.	1				0.01	0.022

silverhorn.co.uk

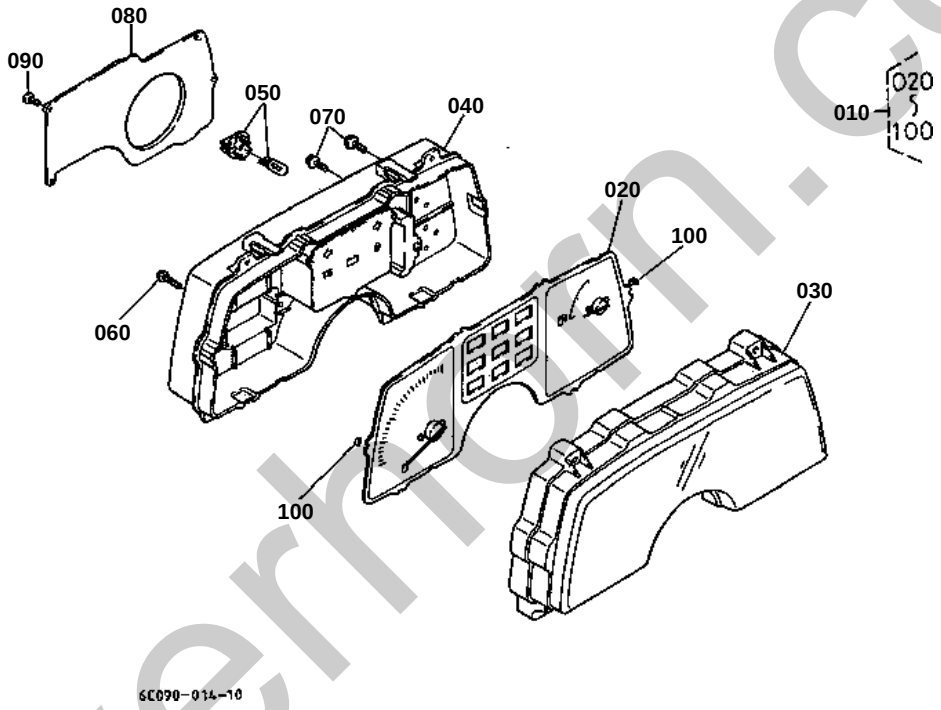

silverhorn.co.uk

↔ Interchangeable; ≠ not interchangeable; ← new for old; → old for new

REF.No	Part No.	Description	Q'ty	S.No.	I/C	REMARKS	Weight (kgf)	Weight (lb)
010	6C090-55100	ASSY METER	1				0.77	1.694
020	6C090-55110	COMP.METER	1				0.43	0.946
030	6C040-55120	GLASS	1				0.16	0.352
040	6C040-55130	ASSY CASE	1				0.25	0.55
050	6C040-55140	ASSY BULB	5				0.003	0.0066
060	6C040-55150	SCREW	2				0.002	0.0044
070	6C040-55160	SCREW	6				0.002	0.0044
080	6C040-55172	COVER	1				0.062	0.1364
090	6C040-55180	SCREW	2				0.003	0.0066
100	6C040-55190	CUSHION	6				0.001	0.0022

silverhorn.co.uk

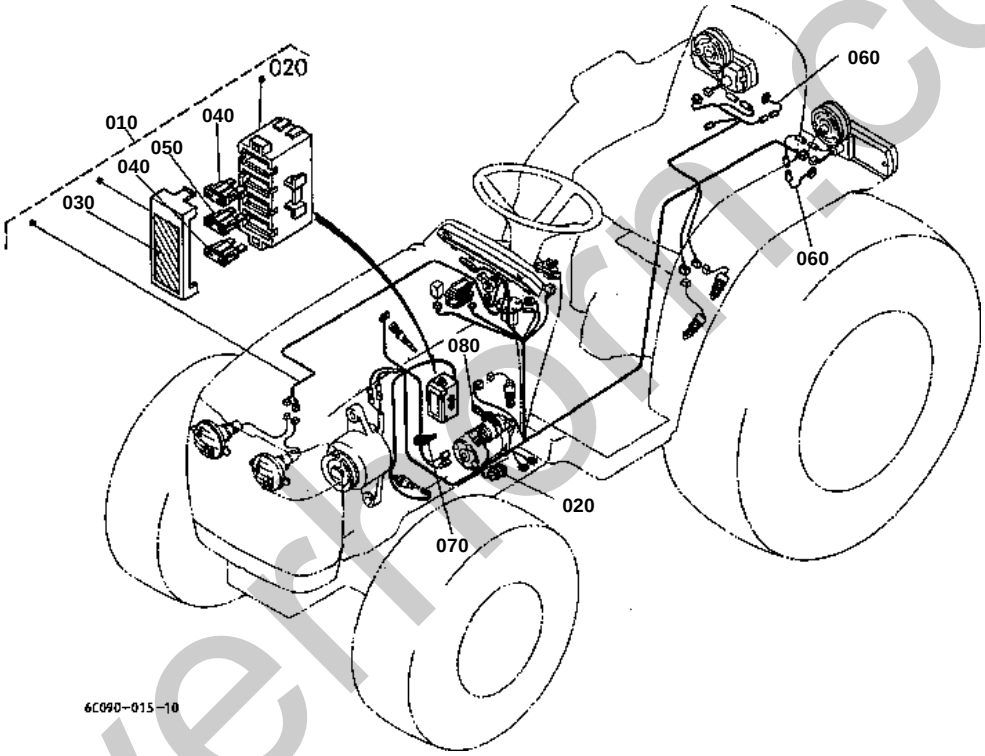

silverfern.co.uk

WIRE HARNESS

↔ Interchangeable; ≠ not interchangeable; ← new for old; → old for new

REF.No	Part No.	Description	Q'ty	S.No.	I/C	REMARKS	Weight (kgf)	Weight (lb)
010	6C090-55462	ASSY WIRE HARNESS	1				0.5	1.1
020	1G111-65720	FUSE	1			30A	0.009	0.0198
030	6C090-47490	LABEL FUSE BOX	1			ENGLISH	0.001	0.0022
030	6C091-47490	LABEL FUSE BOX FR	1			FRENCH	0.001	0.0022
040	36730-75550	FUSE AUTO	2			10A	0.001	0.0022
050	52200-41620	FUSE AUTO	1			15A	0.003	0.0066
060	6C040-55480	WIRE HARNESS	2				0.005	0.011
070	53581-64150	BAND CORD	1				0.002	0.0044
080	55311-41260	BAND CORD	1				0.007	0.0154

silverhorn.co.uk

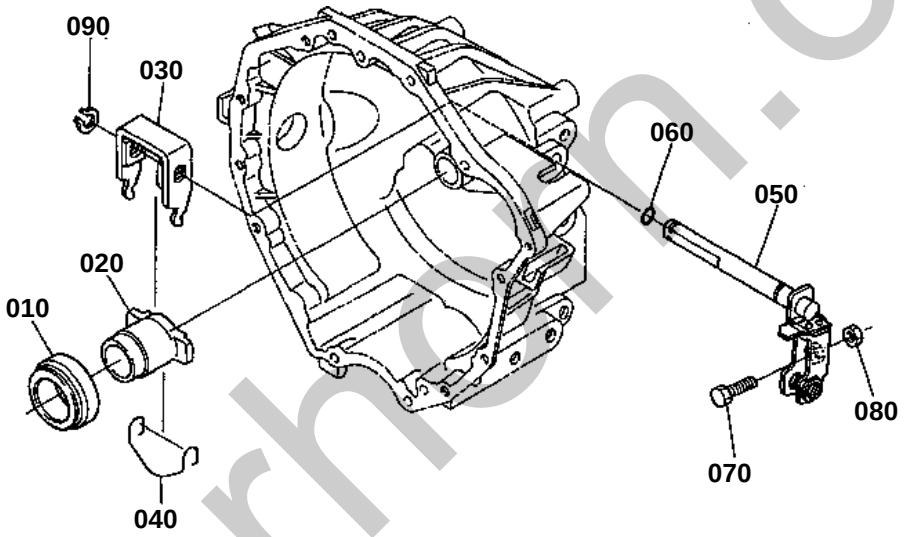

6C090—016—10

silverhorn.co.uk

CLUTCH ROD

↔ Interchangeable; ≠ not interchangeable; ← new for old; → old for new

REF.No	Part No.	Description	Q'ty	S.No.	I/C	REMARKS	Weight (kgf)	Weight (lb)
010	6C040-13210	BEARING RELEASE	1				0.157	0.3454
020	6C090-13220	HOLDER BEARING	1				0.21	0.462
030	6C040-13230	FORK CLUTCH RELEASE	1				0.22	0.484
040	6C040-13240	SPRING	1				0.003	0.0066
050	6C040-13250	SHAFT CLUTCH ROD	1				0	0
060	04811-10140	O RING	1				0.001	0.0022
070	66711-13320	BOLT ADJUSTING	1				0.028	0.0616
080	02118-50100	NUT	1				0.005	0.011
090	04612-00160	CIRCLIP EXTERNAL	1				0.001	0.0022

silverhorn.co.uk

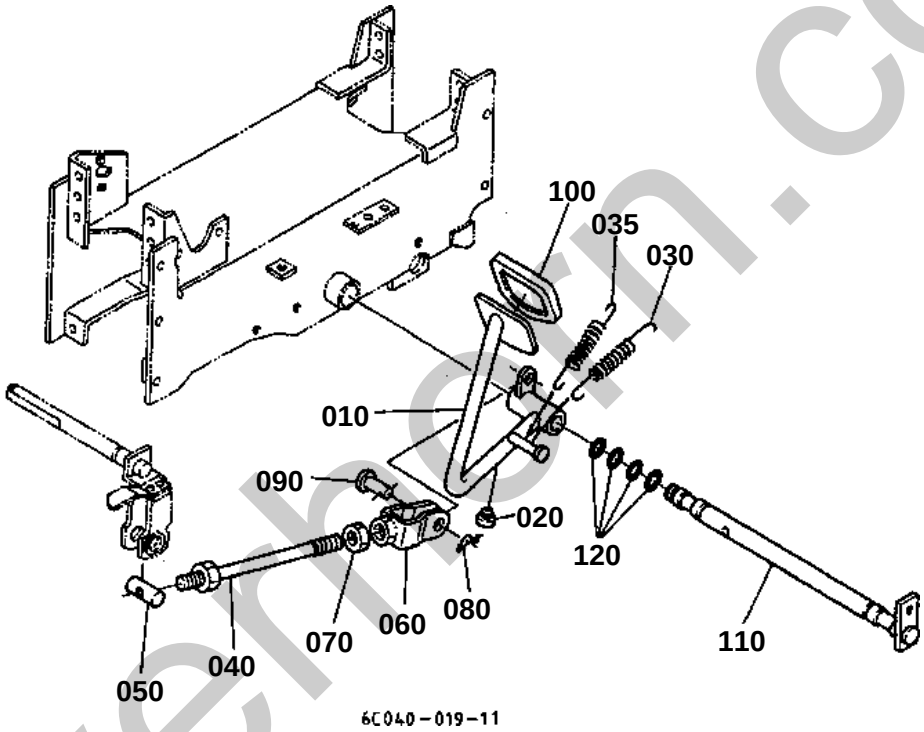

silvernorn.co.uk

CLUTCH PEDAL

↔ Interchangeable; ≠ not interchangeable; ← new for old; → old for new

REF.No	Part No.	Description	Q'ty	S.No.	I/C	REMARKS	Weight (kgf)	Weight (lb)
010	6C040-42135	PEDAL CLUTCH	1				1.68	3.696
020	6C040-42342	CUSHION	1				0.005	0.011
030	6C040-42150	SPRING	1				0.157	0.3454
035	6C040-42160	SPRING	1				0.05	0.11
040	6C040-42113	ROD CLUTCH	1				0.255	0.561
050	6C040-42142	PIN CLUTCH ROD	1				0.034	0.0748
060	6C040-42120	U JOINT	1				0.118	0.2596
070	37720-28990	NUT	1				0.008	0.0176
080	52300-34130	PIN SNAP	1				0.004	0.0088
090	05122-51025	PIN JOINT	1				0.017	0.0374
100	37410-44120	COVER PEDAL	1				0.08	0.176
110	6C040-42310	SHAFT PEDAL	1				1.68	3.696
120	04811-00210	O RING	4				0.001	0.0022

silverhorn.co.uk

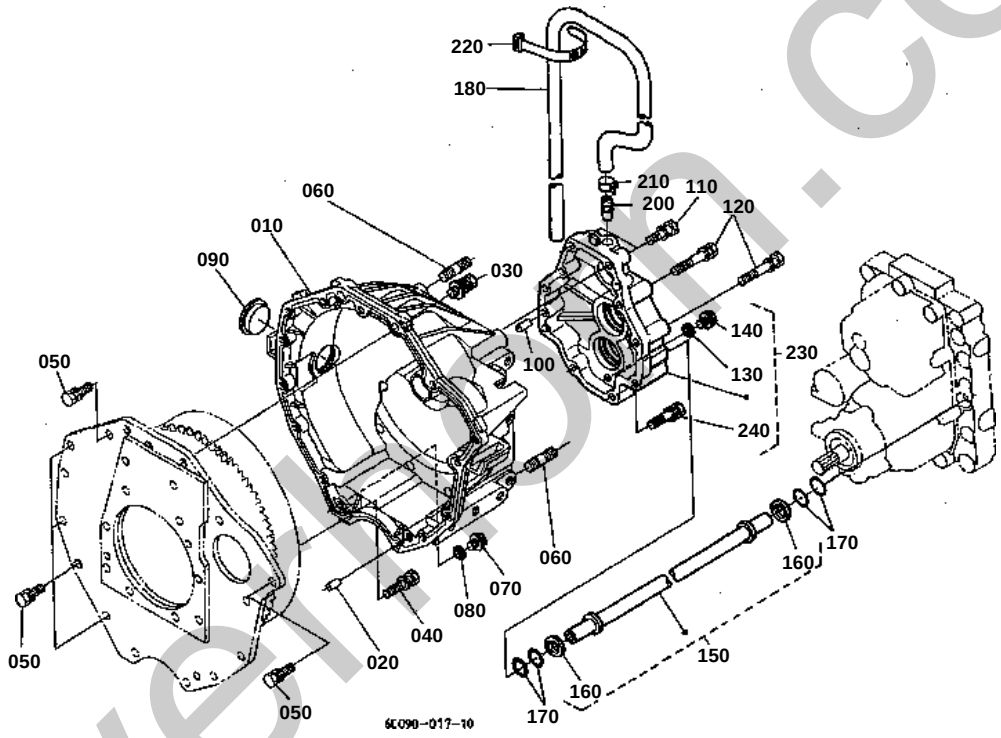

silverfox.co.uk

CLUTCH HOUSING

↔ Interchangeable; ≠ not interchangeable; ← new for old; → old for new

REF.No	Part No.	Description	Q'ty	S.No.	I/C	REMARKS	Weight (kgf)	Weight (lb)
010	6C090-13110	HOUSING CLUTCH	1				5.2	11.44
020	05012-00814	PIN STRAIGHT	2				0.006	0.0132
030	01125-50830	BOLT	2				0.01	0.022
040	01123-50845	BOLT	2				0.02	0.044
050	01123-50830	BOLT	9				0.015	0.033
060	01555-51225	STUD	4				0.039	0.0858
070	01754-50812	BOLT FLANGE	1				0.01	0.022
080	04717-00800	WASHER WITH RUBBER	1				0.001	0.0022
090	37410-13124	PLUG	1				0.02	0.044
100	05012-00614	PIN STRAIGHT	2				0.004	0.0088
110	01123-50840	BOLT	3				0.018	0.0396
120	01123-50860	BOLT	6				0.026	0.0572
130	04717-01000	WASHER WITH RUBBER	1				0.001	0.0022
140	06331-35010	PLUG	1				0.012	0.0264
150	6C040-13153	PIPE	1				0.25	0.55
160	6C040-13160	RING	2				0.001	0.0022
170	04811-00180	O RING	4				0.001	0.0022
180	6C040-13186	HOSE BREATHER	1				0.21	0.462
200	6C040-13140	JOINT	1				0.016	0.0352
210	09318-88200	CLAMP HOSE	1	<=10535			0.004	0.0088
210	32721-39160	CLAMP HOSE	1	>=10536	↔		0.005	0.011
220	55311-41260	BAND CORD	1				0.007	0.0154
230	6C040-97810	COVER CLUTCH HOUSING	1				0	0
240	01123-50840	BOLT	1				0.018	0.0396

silverhorn.co.uk

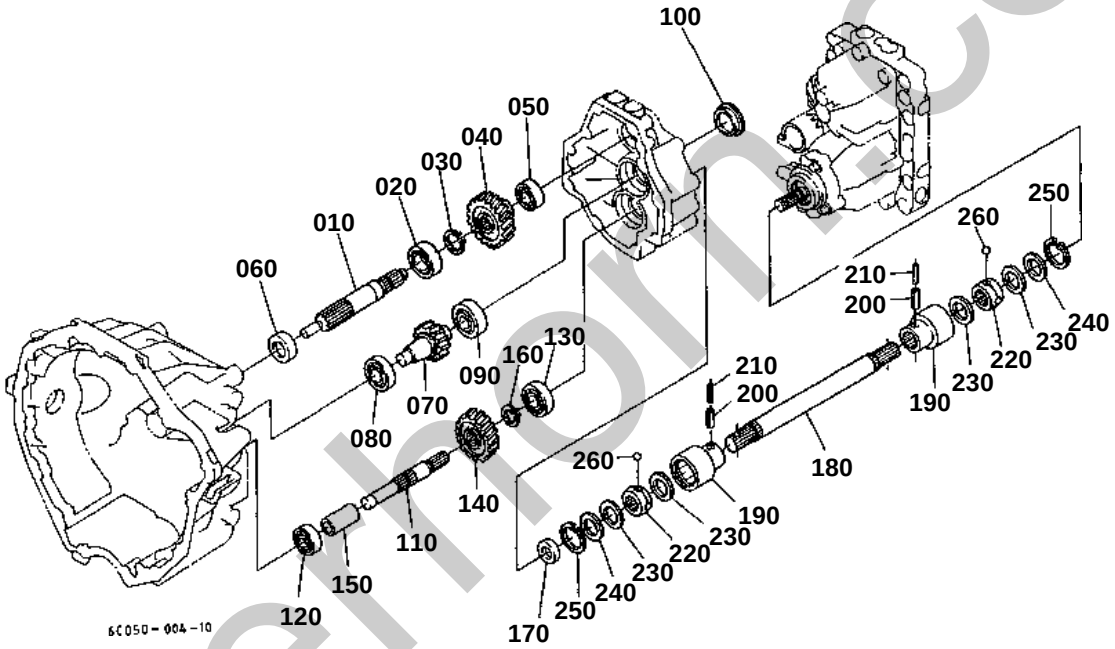

silverthorn.co.uk

↔ Interchangeable; ≠ not interchangeable; ← new for old; → old for new

REF.No	Part No.	Description	Q'ty	S.No.	I/C	REMARKS	Weight (kgf)	Weight (lb)
010	6C040-13514	SHAFT CLUTCH	1				0.5	1.1
020	52300-16180	BEARING	1				0.05	0.11
030	04612-00200	CIRCLIP EXTERNAL	1				0.001	0.0022
040	6C090-13520	GEAR	1			22T	0.25	0.55
050	08101-06203	BEARING BALL	1				0.063	0.1386
060	6C040-13530	SEAL OIL	1				0.012	0.0264
070	6C050-13610	SHAFT FRONT	1			16T	0.42	0.924
080	08101-06203	BEARING BALL	1				0.063	0.1386
090	52300-16180	BEARING	1				0.05	0.11
100	41051-15820	PLUG	1				0.015	0.033
110	6C040-13610	SHAFT FRONT	1				0	0
120	08101-06203	BEARING BALL	1				0.063	0.1386
130	52300-16180	BEARING	1				0.05	0.11
140	6C090-13710	GEAR	1			22T	0.2	0.44
150	6C040-13670	COLLAR	1				0.04	0.088
160	04612-00200	CIRCLIP EXTERNAL	1				0.001	0.0022
170	6C040-13630	SEAL OIL	1				0.01	0.022
180	6C050-13723	SHAFT PROPELLER	1				0.64	1.408
190	67111-13710	COUPLING BALL OUTER	2				0.225	0.495
200	67955-13830	PIN SPRING	2	<=12526			0.005	0.011
200	05411-00640	PIN SPRING	2	>=12527	↔		0.006	0.0132
210	70451-57350	PIN SPRING	2	<=12526			0.005	0.011
210	32721-57680	PIN SPRING	2	>=12527	↔		0.002	0.0044
220	67211-14133	COUPLING BALL INNER	2				0.075	0.165
230	67111-13730	GASKET BALL JOINT	4				0.002	0.0044
240	67111-13740	SUPPORT GASKET	2				0.004	0.0088
250	04611-00350	CIR CLIP INTERNAL	2				0.003	0.0066
260	07715-00803	BALL	8				0.004	0.0088

silverhorn.co.uk

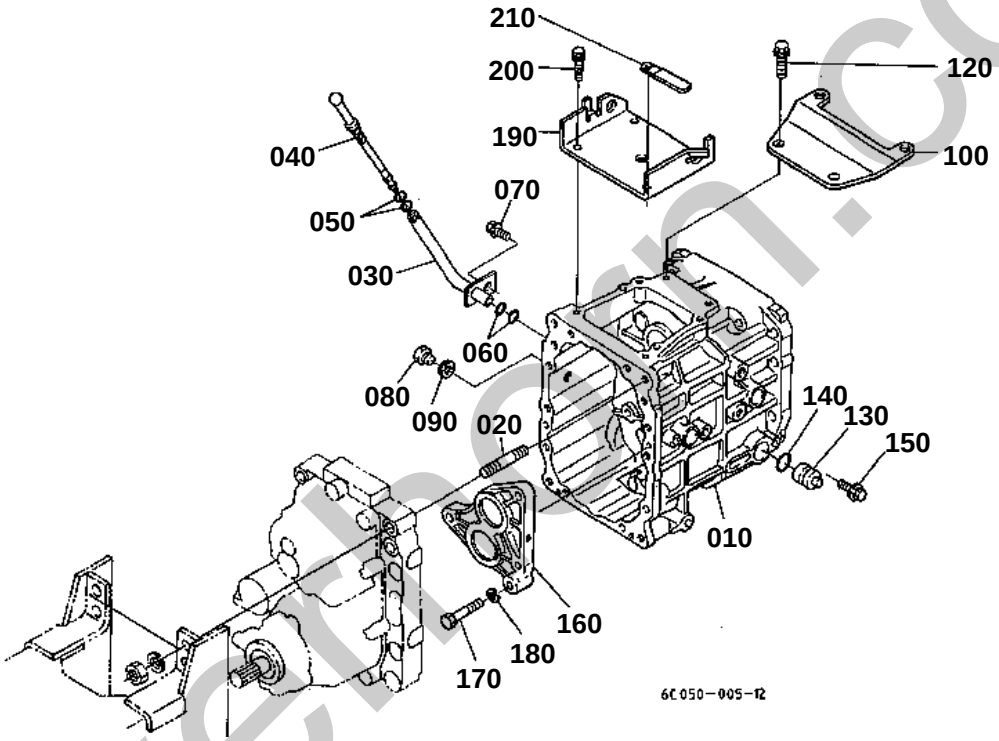

silvermorn.co.uk

TRANSMISSION CASE

↔ Interchangeable; ≠ not interchangeable; ← new for old; → old for new

REF.No	Part No.	Description	Q'ty	S.No.	I/C	REMARKS	Weight (kgf)	Weight (lb)
010	6C050-11110	CASE TRANSMISSION	1				5.49	12.078
020	01555-51260	STUD	4				0.067	0.1474
030	6C040-11150	PIPE OIL GAUGE	1				0.07	0.154
040	6C040-11160	GAUGE OIL	1				0.01	0.022
050	04811-10070	O RING	2				0.001	0.0022
060	04811-00120	O RING	2				0.001	0.0022
070	01123-60816	BOLT	1				0.01	0.022
080	06311-55030	PLUG	1				0.05	0.11
090	04717-01700	WASHER WITH RUBBER	1				0.003	0.0066
100	6C040-11180	BRACKET	1				0.4	0.88
120	01123-51030	BOLT	2				0.025	0.055
130	6C050-11140	PLUG	1				0.075	0.165
140	04811-00200	O RING	1				0.001	0.0022
150	01127-50816	BOLT	1				0.02	0.044
160	6C050-12110	HOLDER BEARING	1				0.23	0.506
170	6C050-12120	BOLT REAMER	3				0.036	0.0792
180	04512-60100	WASHER SPRING	3				0.002	0.0044
190	6C050-12412	COVER UPPER	1				0.76	1.672
200	01123-60816	BOLT	4				0.01	0.022
210	13824-67580	CLAMP CORD	1				0.006	0.0132

silverhorn.co.uk

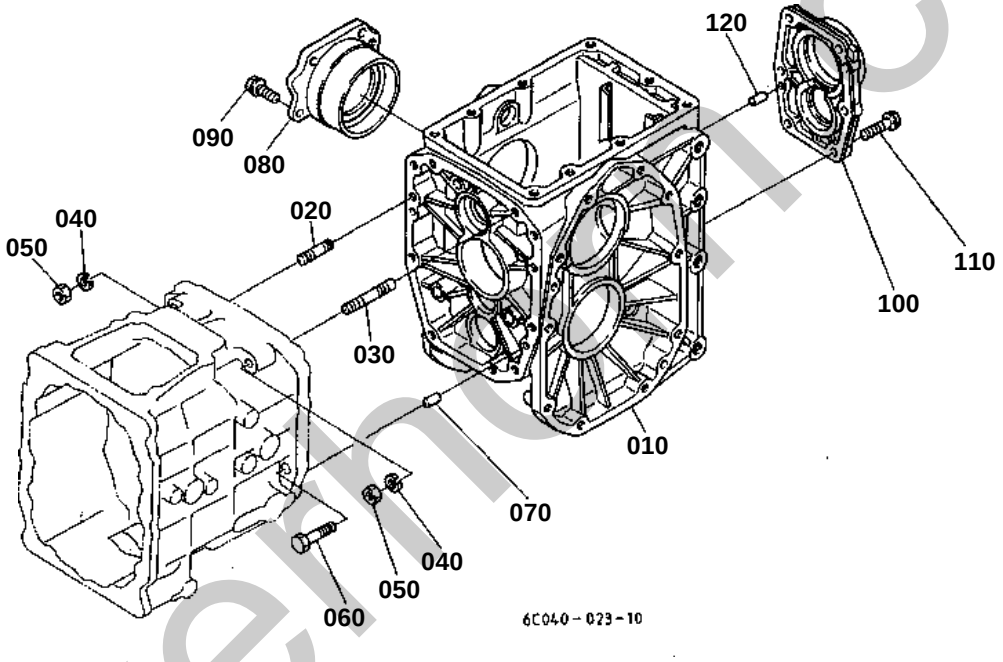

silvermoor.co.uk

DIFFERENTIAL GEAR CASE

↔ Interchangeable; ≠ not interchangeable; ← new for old; → old for new

REF.No	Part No.	Description	Q'ty	S.No.	I/C	REMARKS	Weight (kgf)	Weight (lb)
010	6C040-11174	CASE DIFF.GEAR	1				7.3	16.06
020	01555-51035	STUD	2				0.029	0.0638
030	01555-51065	STUD	2				0.048	0.1056
040	04512-60100	WASHER SPRING	4				0.002	0.0044
050	02176-50100	NUT	4				0.005	0.011
060	01123-51040	BOLT	7				0.03	0.066
070	05012-00614	PIN STRAIGHT	2				0.004	0.0088
080	66611-11812	HOLDER DIFF.BRG.RH	1				0.72	1.584
090	01123-50822	BOLT	4				0.012	0.0264
100	6C040-12210	COVER REAR	1	<=12554			0	0
100	6A100-12210	COVER REAR	1	>=12555	↔		0	0
110	01123-51030	BOLT	6				0.025	0.055
120	05012-00614	PIN STRAIGHT	2				0.004	0.0088

silverhorn.co.uk

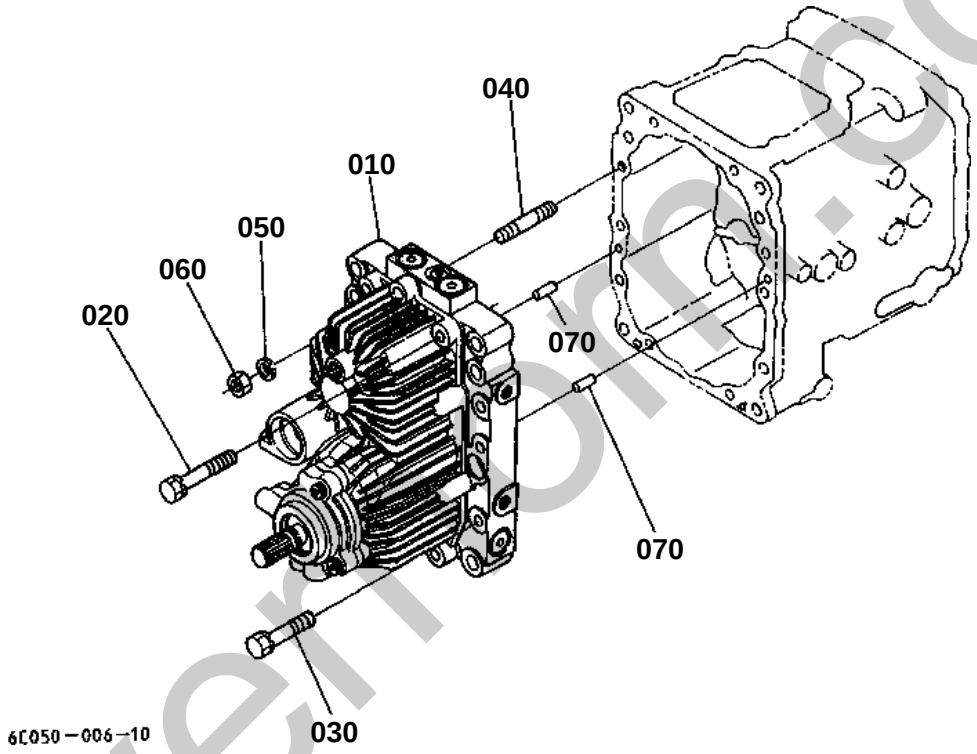

silverfarm.co.uk

↔ Interchangeable; ≠ not interchangeable; ← new for old; → old for new

REF.No	Part No.	Description	Q'ty	S.No.	I/C	REMARKS	Weight (kgf)	Weight (lb)
010	6C050-11606	ASSY HST	1			REFER TO L.NO.0C11-R0 FOR COMPONENTS.	15	33
020	01123-51075	BOLT	4				0.05	0.11
030	01123-51060	BOLT	5				0.05	0.11
040	6C050-11690	STUD	1				0.043	0.0946
050	04512-60100	WASHER SPRING	1				0.002	0.0044
060	02176-50100	NUT	1				0.005	0.011
070	05012-00614	PIN STRAIGHT	2				0.004	0.0088

silverhorn.co.uk

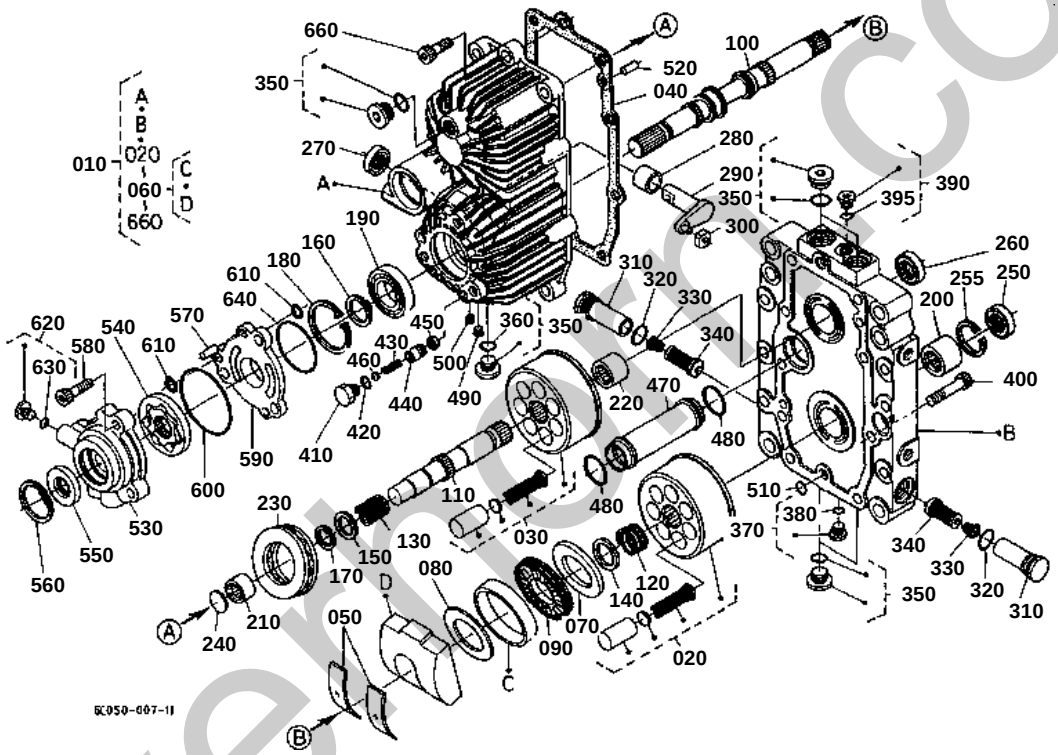

silvermore.co.uk

↔ Interchangeable; ≠ not interchangeable; ← new for old; → old for new

REF.No	Part No.	Description	Q'ty	S.No.	I/C	REMARKS	Weight (kgf)	Weight (lb)
010	6C050-11606	ASSY HST	1				15	33
020	6C050-98100	KIT CYL-BLOCK PUMP	1				0.92	2.024
030	6C050-98200	KIT CYL-BLOCK MOTOR	1				0.92	2.024
040	6C050-98080	GASKET	1				0.005	0.011
050	6C050-98750	BEARING CRADLE	2				0.017	0.0374
060	6C050-98302	ASSY SWASHPLATE	1				1.48	3.256
070	6C050-98120	PLATE THRUST	1				0.079	0.1738
080	6C050-98130	PLATE THRUST	1				0.038	0.0836
090	6C052-98140	BEARING THRUST	1				0.07	0.154
100	6C050-98150	SHAFT PUMP	1				0.585	1.287
110	6C050-98160	SHAFT MOTOR	1				0.34	0.748
120	6C050-98170	SPRING	1				0.013	0.0286
130	6C050-98180	SPRING	1				0.011	0.0242
140	6C050-98190	WASHER	1				0.002	0.0044
150	66101-37060	WASHER PLAIN	1				0.001	0.0022
160	6C050-98210	CIR-CLIP	1				0.002	0.0044
170	66101-37020	CLIP	1				0.001	0.0022
180	6C050-98220	CIR-CLIP	1				0.006	0.0132
190	6C050-98230	BEARING BALL	1				0.08	0.176
200	6C050-98243	BEARING NEEDLE	1				0.054	0.1188
210	66101-37080	BEARING NEEDLE	1				0.015	0.033
220	6C050-98250	BEARING NEEDLE	1				0.053	0.1166
230	66101-37220	BEARING THRUST BALL	1				0.25	0.55
240	66101-37230	PLATE	1				0.003	0.0066
250	6C050-98260	SEAL OIL	1				0.006	0.0132
255	6C050-98630	CIR-CLIP	1				0.001	0.0022
260	66101-36780	SEAL OIL	1				0.01	0.022
270	66101-36720	SEAL OIL	1				0.007	0.0154
280	6C050-98640	BEARING JOURNAL	1				0.02	0.044
290	6C050-98650	ARM TRUNNION	1				0.078	0.1716
300	66071-36250	GUIDE THROTTLE	1				0.005	0.011
310	6C050-98270	PLUG	2				0.069	0.1518
320	6C050-98280	O RING	2				0.001	0.0022
330	6C050-98290	SPRING CHECK VALVE	2				0.001	0.0022
340	6C050-98310	ASSY VALVE RELIEF	2				0.02	0.044
350	6C050-98400	ASSY PLUG	6				0.028	0.0616
370	6C050-98350	ASSY PLUG	1				0.013	0.0286
380	6C050-98670	RING	1				0.001	0.0022
390	6C050-98360	ASSY PLUG	1				0.008	0.0176
395	6C050-98690	RING	1				0.001	0.0022
400	6C050-98370	BOLT HEX-SOC-HD	5				0.04	0.088
410	6C050-98380	PLUG	1				0.014	0.0308
420	6C050-98390	O RING	1				0.001	0.0022
430	6C050-98410	SPRING	1				0.001	0.0022
440	6C050-98420	CONE	1				0.006	0.0132
450	6C050-98430	SEAT	1				0.002	0.0044
460	6C050-98440	SHIM	1				0.001	0.0022
470	6C050-98450	PIPE	1				0.1	0.22
480	6C050-98460	O RING	2				0.001	0.0022
490	6C050-98470	PLUG	1				0.001	0.0022
500	6C050-98480	PLUG	1				0.001	0.0022
510	6C050-98490	O RING	1				0.001	0.0022
520	6C050-98510	PIN	2				0.002	0.0044
530	6C050-98520	HOUSING PUMP	1				0.202	0.4444
540	6C050-98530	ASSYROTOR	1				0.103	0.2266

silverthorn.co.uk

↔ Interchangeable; ≠ not interchangeable; ← new for old; → old for new

REF.No	Part No.	Description	Q'ty	S.No.	I/C	REMARKS	Weight (kgf)	Weight (lb)
550	6C050-98540	SEAL OIL	1				0.01	0.022
560	6C050-98550	CIR-CLIP	1				0.003	0.0066
570	6C050-98560	PIN	1				0.004	0.0088
580	6C050-98570	BOLT HEX-SOC-HD	3				0.021	0.0462
590	6C050-98580	PLATE SPACER	1				0.3	0.66
600	6C050-98590	O RING	1				0.002	0.0044
610	6C050-98610	O RING	2				0.001	0.0022
620	6C050-98500	ASSY PLUG	1				0.005	0.011
630	6C050-98720	RING	1				0.001	0.0022
640	6C050-98730	RING	1				0.001	0.0022
660	6C050-98620	BOLT HEX-SOC-HD	1				0.027	0.0594

silverhorn.co.uk

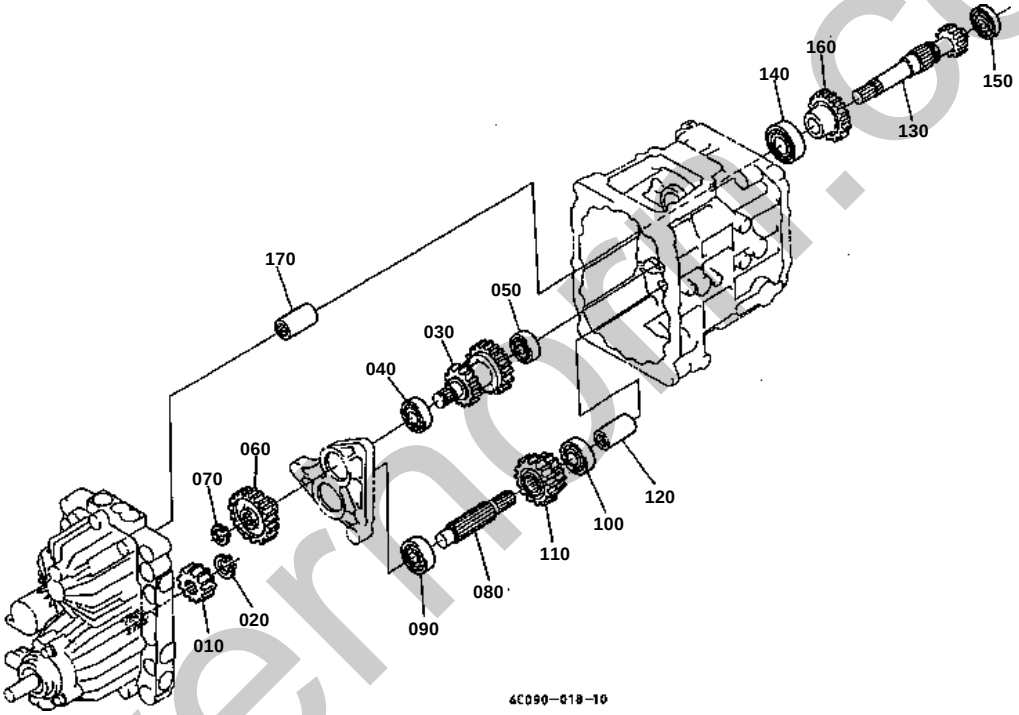

silvermoor.co.uk

2ND/3RD/4TH SHAFT

↔ Interchangeable; ≠ not interchangeable; ← new for old; → old for new

REF.No	Part No.	Description	Q'ty	S.No.	I/C	REMARKS	Weight (kgf)	Weight (lb)
010	6C050-14290	GEAR	1			14T	0.115	0.253
020	04612-00180	CIRCLIP EXTERNAL	1				0.001	0.0022
030	6C090-14210	GEAR-SHAFT SECOND	1			13-18T	0.8	1.76
040	52300-16180	BEARING	1				0.05	0.11
050	61361-14280	BEARING BALL	1				0.09	0.198
060	6C050-14280	GEAR	1			27T	0.32	0.704
070	04612-00190	CIRCLIP EXTERNAL	1				0.001	0.0022
080	6C090-14310	SHAFT THIRD	1				0.35	0.77
090	08101-06204	BEARING BALL	1				0.102	0.2244
100	08101-06304	BEARING BALL	1				0.146	0.3212
110	6C090-14320	GEAR	1			17-13T	0.44	0.968
120	6C050-14520	COUPLING	1				0.099	0.2178
130	6C050-14410	GEAR-SHAFT FOURTH	1			14T	0.635	1.397
140	08101-06205	BEARING BALL	1				0.14	0.308
150	61361-14280	BEARING BALL	1				0.09	0.198
160	6C050-14450	GEAR	1			18T	0.28	0.616
170	6C050-14520	COUPLING	1				0.099	0.2178

silverhorn.co.uk

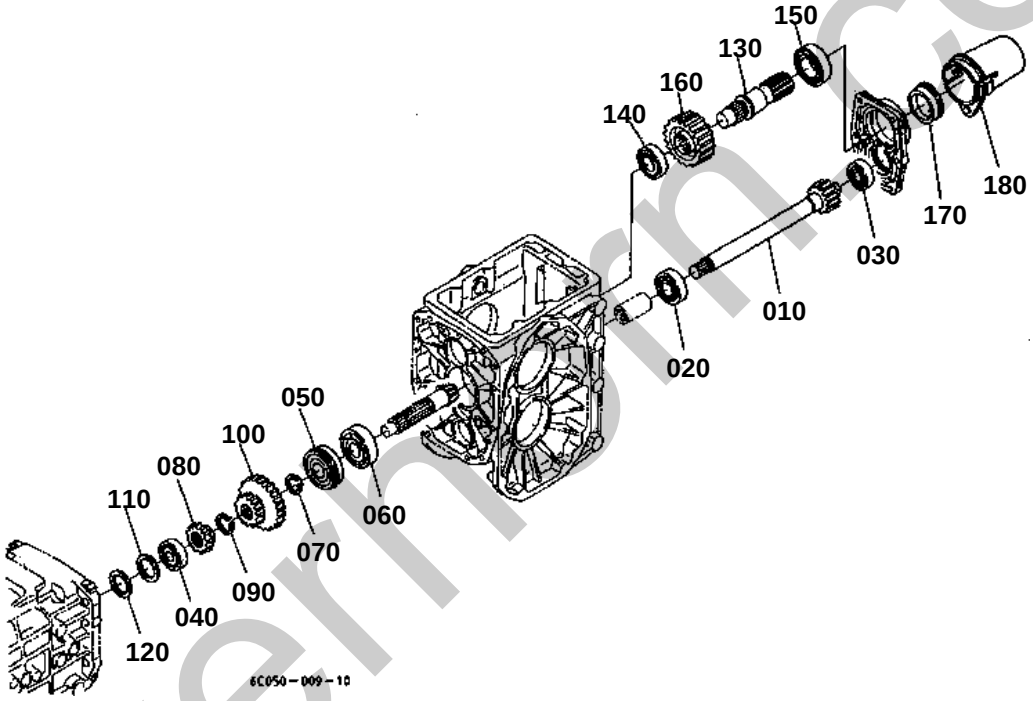

silverhorn.co.uk

5TH SHAFT/PTO SHAFT

↔ Interchangeable; ≠ not interchangeable; ← new for old; → old for new

REF.No	Part No.	Description	Q'ty	S.No.	I/C	REMARKS	Weight (kgf)	Weight (lb)
010	6C050-14510	GEAR-SHAFT FIFTH	1			11T	1.025	2.255
020	67121-56770	BEARING BALL	1				0.127	0.2794
030	67955-14170	BEARING BALL	1				0.114	0.2508
040	08221-07303	BEARING BALL	1				0.116	0.2552
050	38430-21590	BEARING BALL	1				0.25	0.55
060	64441-22170	BEARING BALL	1				0.24	0.528
070	15471-95360	CIRCLIP EXTERNAL	1				0.004	0.0088
080	6C040-14650	GEAR 4WD	1			13T	0.093	0.2046
090	04612-00250	CIRCLIP EXTERNAL	1				0.002	0.0044
100	6C050-14620	GEAR	1			15-29T	0.425	0.935
110	66591-14720	SPACER	1				0.002	0.0044
120	66611-14670	SHIM	1			1.4MM	0.008	0.0176
120	66611-14680	SHIM	1			1.8MM	0.01	0.022
120	66611-14690	SHIM	1			0.2MM	0.001	0.0022
130	37410-16510	SHAFT PTO	1				0.79	1.738
140	67121-56770	BEARING BALL	1				0.127	0.2794
150	6C040-14730	BEARING BALL	1				0.15	0.33
160	6C040-14720	GEAR	1			24T	0.68	1.496
170	37410-16550	SEAL OIL	1				0.03	0.066
180	37410-63112	CAP PTO SHAFT	1				0.055	0.121

silverhorn.co.uk

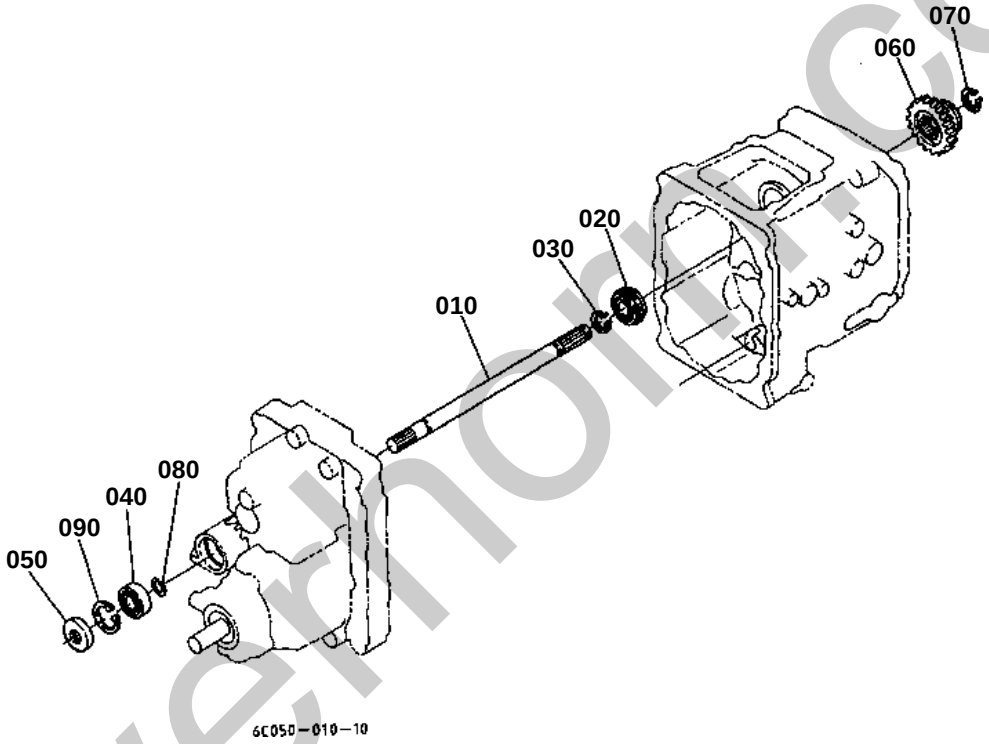

silvermoor.co.uk

FRONT WHEEL DRIVE SHAFT

↔ Interchangeable; ≠ not interchangeable; ← new for old; → old for new

REF.No	Part No.	Description	Q'ty	S.No.	I/C	REMARKS	Weight (kgf)	Weight (lb)
010	6C050-14810	SHAFT 4WD	1				0.4	0.88
020	08151-06204	BEARING BALL	1				0.11	0.242
030	04612-00200	CIRCLIP EXTERNAL	1				0.001	0.0022
040	52300-21660	BEARING	1				0.07	0.154
050	09500-20428	SEAL OIL	1				0.012	0.0264
060	6C040-14840	GEAR 4WD	1			20T	0.23	0.506
070	04612-00190	CIRCLIP EXTERNAL	1				0.001	0.0022
080	6C050-14850	CIRCLIP EXTERNAL	1				0.001	0.0022
090	04611-00420	CIR CLIP INTERNAL	1				0.006	0.0132

silverhorn.co.uk

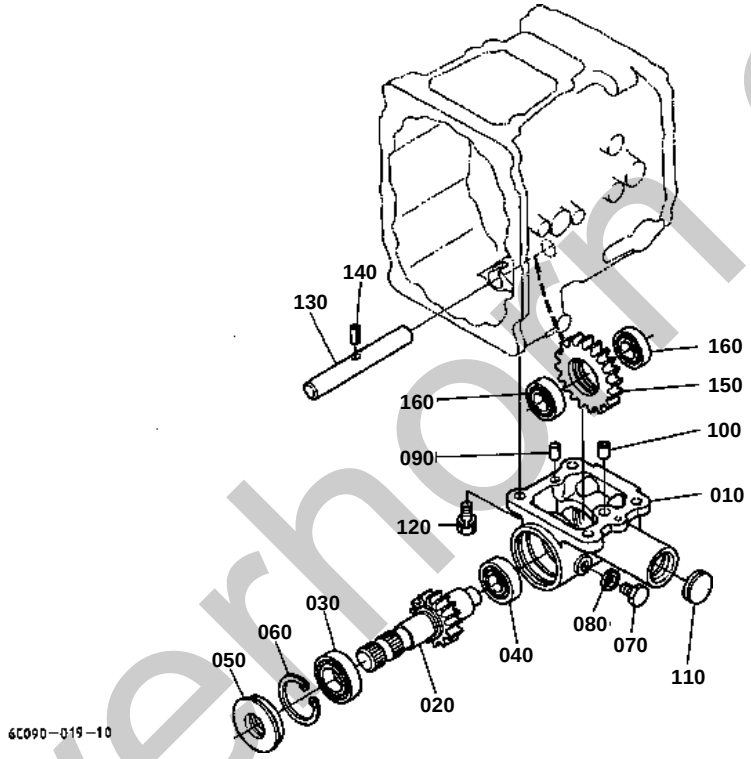

silverhorn.co.uk

MID PTO

↔ Interchangeable; ≠ not interchangeable; ← new for old; → old for new

REF.No	Part No.	Description	Q'ty	S.No.	I/C	REMARKS	Weight (kgf)	Weight (lb)
010	6C090-21210	CASE MID PTO	1				0.508	1.1176
020	6C090-21230	SHAFT MID PTO	1			11T	0.54	1.188
030	08101-06205	BEARING BALL	1				0.14	0.308
040	08101-06204	BEARING BALL	1				0.102	0.2244
050	32430-25540	SEAL OIL MID PTO	1				0.04	0.088
060	04611-00520	CIR CLIP INTERNAL	1				0.009	0.0198
070	06331-35012	PLUG	1				0.022	0.0484
080	04717-01200	WASHER WITH RUBBER	1				0.002	0.0044
090	05012-00614	PIN STRAIGHT	1				0.004	0.0088
100	66116-11190	PIPE KNOCK	1				0.002	0.0044
110	16241-96262	PLUG	1				0.007	0.0154
120	01123-51035	BOLT	4				0.025	0.055
130	6C090-21250	SHAFT IDLE	1				0.22	0.484
140	05411-00616	PIN SPRING	1				0.002	0.0044
150	6C090-21220	GEAR M-PTO	1			19T	0.28	0.616
160	08101-06003	BEARING BALL	2				0.037	0.0814

silverhorn.co.uk

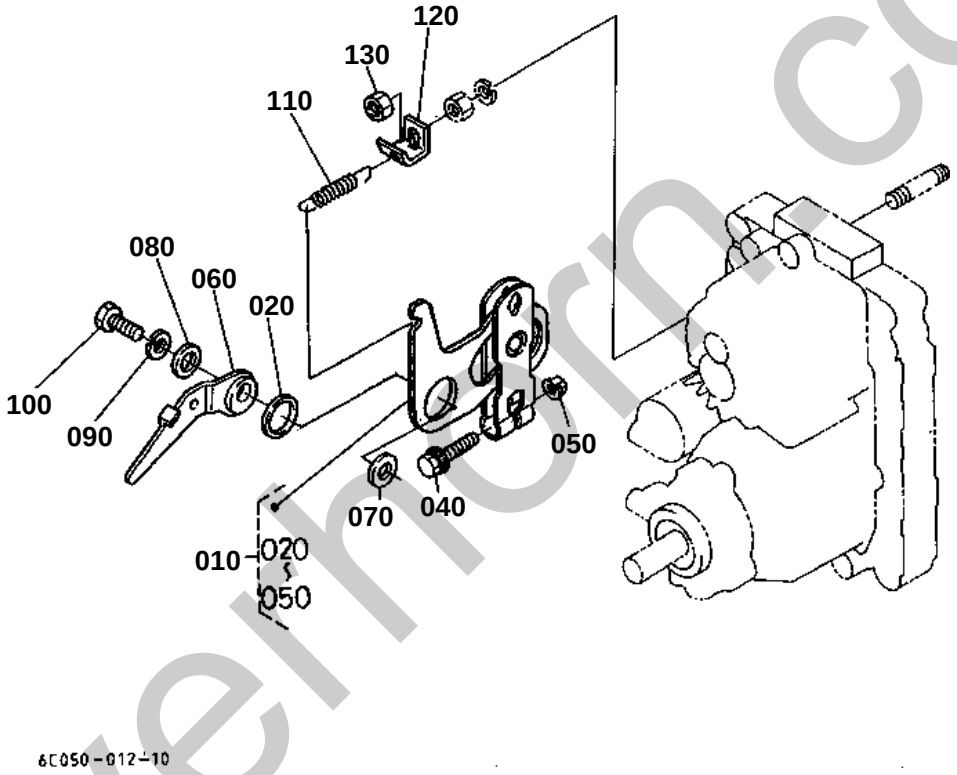

silverhorn.co.uk

SPEED CHANGE LEVER

↔ Interchangeable; ≠ not interchangeable; ← new for old; → old for new

REF.No	Part No.	Description	Q'ty	S.No.	I/C	REMARKS	Weight (kgf)	Weight (lb)
010	6C052-43410	ASSY LEVER TRUNNION	1				0.325	0.715
020	6C050-43450	BUSH	1				0.005	0.011
040	01125-50840	BOLT	1				0.02	0.044
050	6C050-43510	NUT	1				0.005	0.011
060	6C050-43464	LEVER NEUTRAL	1				0.065	0.143
070	04015-60100	WASHER PLAIN	1				0.015	0.033
080	04013-60100	WASHER PLAIN	1				0.004	0.0088
090	04512-60100	WASHER SPRING	1				0.002	0.0044
100	6C050-43490	BOLT	1				0.018	0.0396
110	6C050-43470	SPRING	1				0.047	0.1034
120	6C050-43483	HOOK SPRING	1				0.018	0.0396
130	02176-50100	NUT	1				0.005	0.011

silverhorn.co.uk

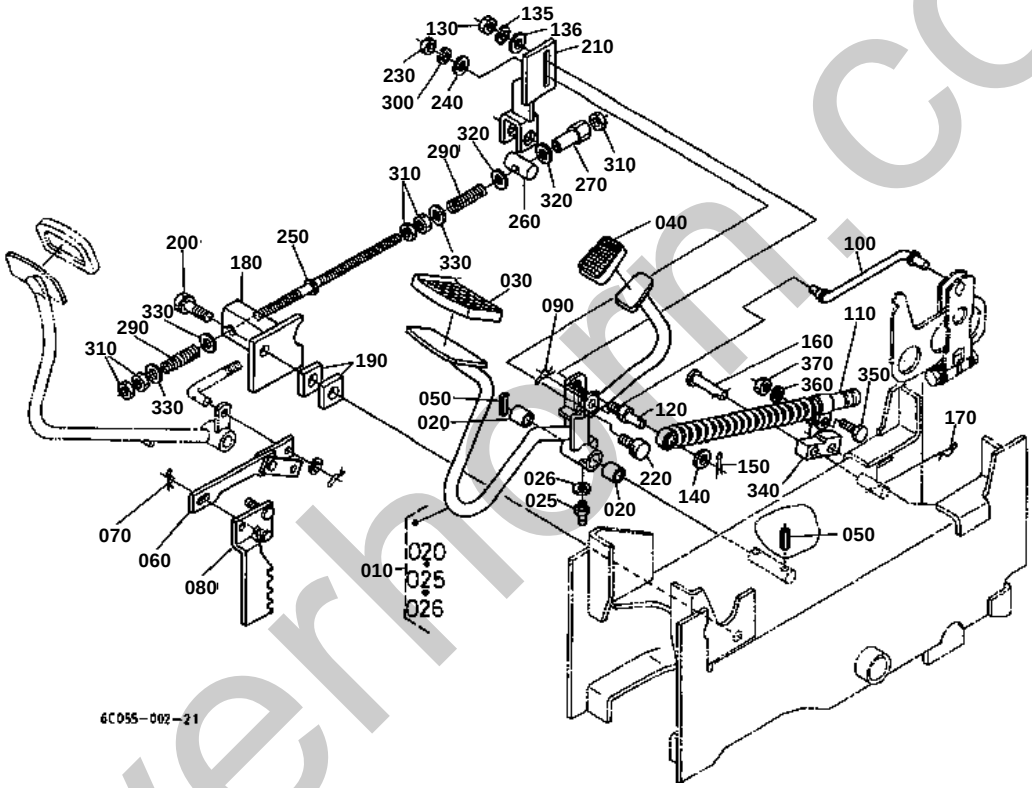

silverhorn.co.uk

SPEED CONTROL PEDAL

↔ Interchangeable; ≠ not interchangeable; ← new for old; → old for new

REF.No	Part No.	Description	Q'ty	S.No.	I/C	REMARKS	Weight (kgf)	Weight (lb)
010	6C050-43306	ASSY PEDAL HST	1				1.92	4.224
020	08511-01615	BUSH	2				0.01	0.022
025	06613-10675	NIPPLE GREASE	1				0.003	0.0066
026	04013-60060	WASHER PLAIN	1				0.001	0.0022
030	37410-44120	COVER PEDAL	1				0.08	0.176
040	37410-42760	COVER PEDAL	1				0.025	0.055
050	05411-00625	PIN SPRING	2				0.004	0.0088
060	6C050-43340	ASSY LINK	1				0.142	0.3124
070	05525-50800	PIN SNAP	1				0.001	0.0022
080	6C050-43333	ARM	1				0.33	0.726
090	05525-61000	PIN SNAP	1				0.002	0.0044
100	6C050-43323	ROD HST PEDAL	1				0.136	0.2992
110	6C052-43350	DAMPER HST	1				0.29	0.638
120	6C050-43192	BOLT	1				0.02	0.044
130	02114-50080	NUT	1				0.005	0.011
135	04512-60080	WASHER SPRING	1				0.002	0.0044
136	04013-60080	WASHER PLAIN	1				0.002	0.0044
140	04012-50080	WASHER PLAIN	1				0.001	0.0022
150	05511-50215	PIN SPLIT	1				0.001	0.0022
160	05122-50850	PIN JOINT	1				0.02	0.044
170	05525-51600	PIN SNAP	1				0.003	0.0066
180	6C050-43522	STAY SPRING	1				0.25	0.55
190	6C050-43570	SPACER	2				0.05	0.11
200	01133-51245	BOLT	1				0.055	0.121
210	6C050-43533	ARM SPRING	1				0.29	0.638
220	6C050-43590	BOLT SPRING	1				0.018	0.0396
230	02114-50080	NUT	1				0.005	0.011
240	04013-60080	WASHER PLAIN	1				0.002	0.0044
250	6C050-43540	ROD	1				0.05	0.11
260	6C050-43562	PIN	1				0.65	1.43
270	6C050-43552	COLLAR	1				0.02	0.044
290	6C050-43583	SPRING	2				0.02	0.044
300	04512-60080	WASHER SPRING	1				0.002	0.0044
310	02114-50080	NUT	5				0.005	0.011
320	04013-60100	WASHER PLAIN	2				0.004	0.0088
330	04013-60080	WASHER PLAIN	3				0.002	0.0044
340	6C050-43620	STAY DAMPER	1				0.07	0.154
350	01153-60830	BOLT	1				0.025	0.055
360	04512-60080	WASHER SPRING	1				0.002	0.0044
370	02114-50080	NUT	1				0.005	0.011

silvehorn.co.uk

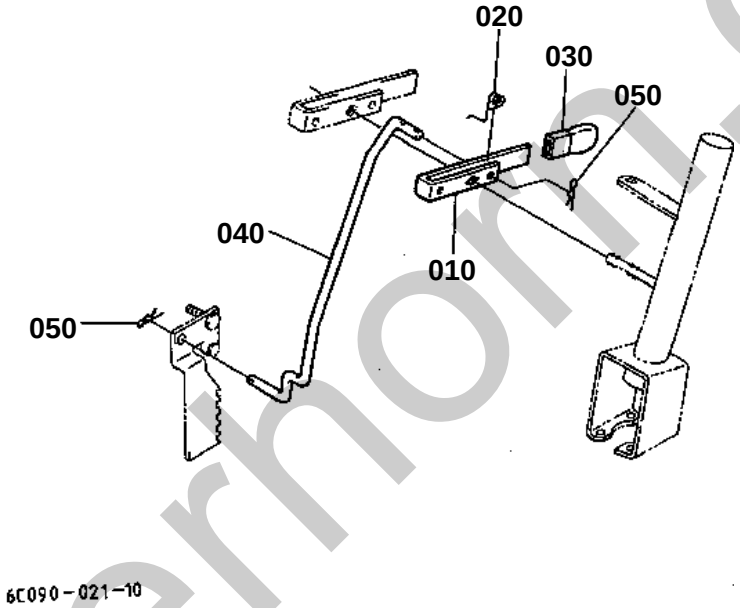

silverhorn.co.uk

SPEED SET LEVER

↔ Interchangeable; ≠ not interchangeable; ← new for old; → old for new

REF.No	Part No.	Description	Q'ty	S.No.	I/C	REMARKS	Weight (kgf)	Weight (lb)
010	6C040-41350	LEVER SPEED SET	1				0.104	0.2288
020	6C050-41390	SPRING RETURN	1				0.006	0.0132
030	6C040-41360	GRIP LEVER	1				0.012	0.0264
040	6C050-41383	ROD	1				0.185	0.407
050	05525-50800	PIN SNAP	2				0.001	0.0022

silverhorn.co.uk

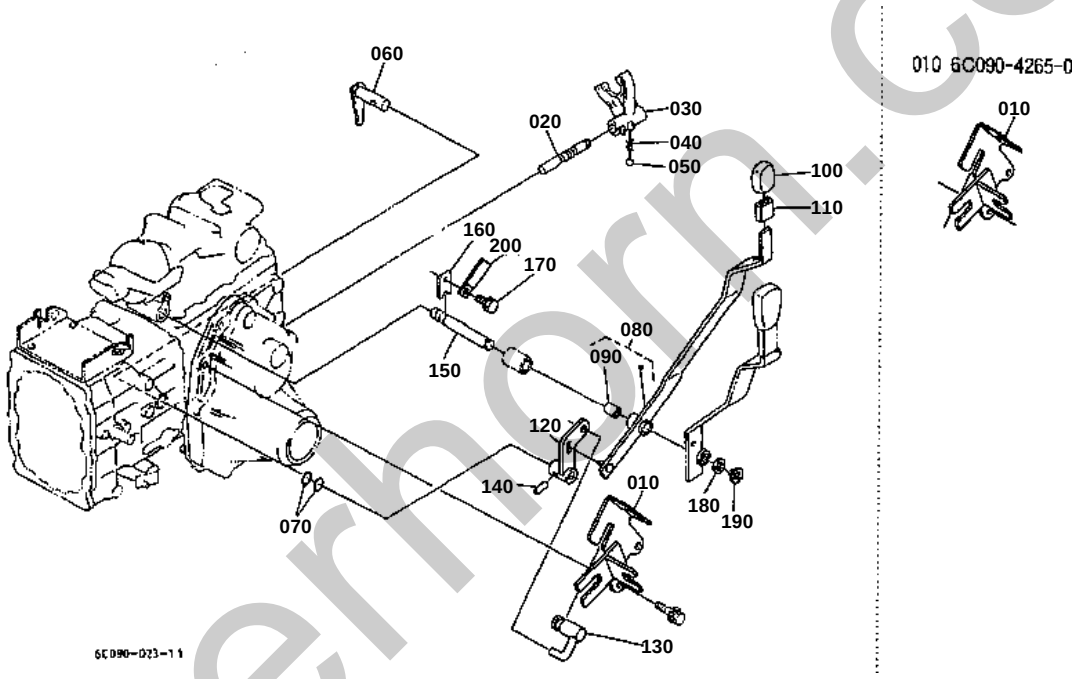

silverhorn.co.uk

RANGE GEAR SHIFT LEVER

↔ Interchangeable; ≠ not interchangeable; ← new for old; → old for new

REF.No	Part No.	Description	Q'ty	S.No.	I/C	REMARKS	Weight (kgf)	Weight (lb)
010	6C090-42650	STAY NEUTRAL SWITCH	1	<=12470			0	0
010	6C090-42652	STAY NEUTRAL SWITCH	1	>=12471	←		0.3	0.66
020	6C050-18410	ROD FORK	1				0.118	0.2596
030	6C040-18420	FORK RANGE SHIFT	1				0.079	0.1738
040	62061-18260	SPRING STOPPER	1				0.002	0.0044
050	07715-01605	BALL	1				0.003	0.0066
060	6C040-18510	ARM RANGE SHIFT	1				0.075	0.165
070	04811-00160	O RING	2				0.001	0.0022
080	6C040-42600	LAVER RANGE SHIFT	1				0.83	1.826
090	08511-01825	BUSH	1				0.01	0.022
100	6C040-42630	GRIP	1	<=12106			0.02	0.044
100	6A320-42630	GRIP	1	>=12107	↔		0.019	0.0418
110	37410-43570	PIPE	1				0.005	0.011
120	6C040-42623	LEVER SHIFT ARM	1				0.174	0.3828
130	6C050-42642	ROD NEUTRAL SWITCH	1				0.113	0.2486
140	05411-00836	PIN SPRING	1				0.008	0.0176
150	6C040-42670	SHAFT FULCRUM	1				0.25	0.55
160	6C040-42680	PLATE	1				0.017	0.0374
170	01123-60816	BOLT	1				0.01	0.022
180	04011-50180	WASHER PLAIN	1				0.012	0.0264
190	04612-00180	CIRCLIP EXTERNAL	1				0.001	0.0022
200	13824-67580	CLAMP CORD	1				0.006	0.0132

silverhorn.co.uk

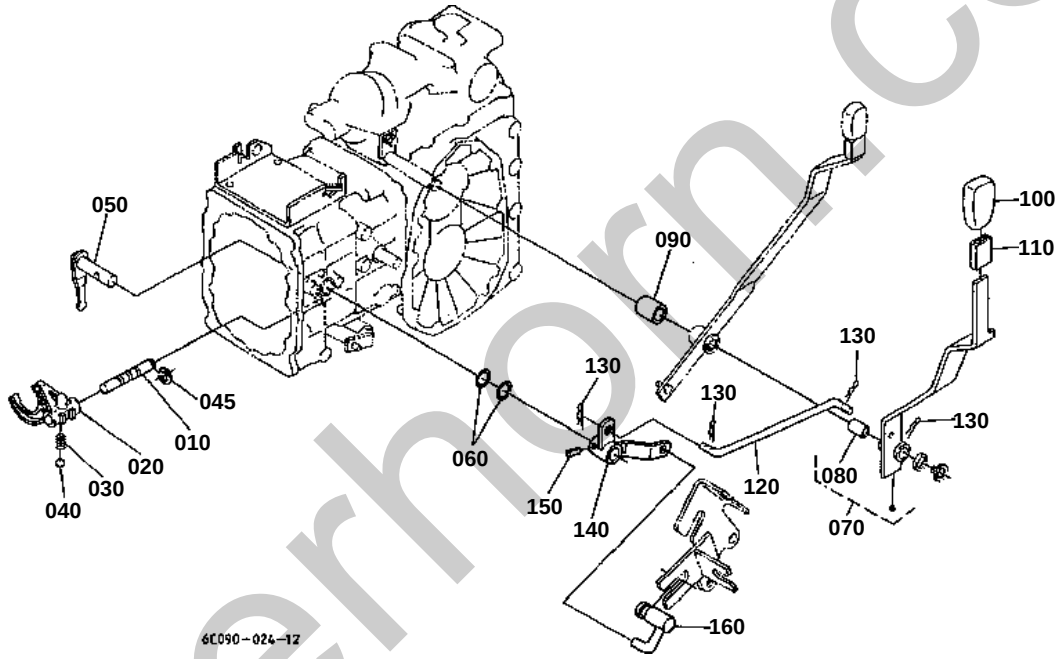

silverhorn.co.uk

PTO GEAR SHIFT LEVER

↔ Interchangeable; ≠ not interchangeable; ← new for old; → old for new

REF.No	Part No.	Description	Q'ty	S.No.	I/C	REMARKS	Weight (kgf)	Weight (lb)
010	6C090-18610	ROD FORK	1	<=18041			0.1	0.22
010	6C090-18612	ROD FORK	1	>=18042	≠		0.11	0.242
020	6C090-18620	FORK PTO SHIFT	1				0.09	0.198
030	62061-18260	SPRING STOPPER	1				0.002	0.0044
040	07715-01605	BALL	1				0.003	0.0066
045	04613-50120	CIR CLIP EXTERNAL	1	>=18042			0.001	0.0022
050	6C040-18710	ARM PTO SHIFT	1				0.155	0.341
060	04811-00160	O RING	2				0.001	0.0022
070	6C040-42700	LEVER PTO SHIFT	1				0.7	1.54
080	08511-01825	BUSH	1				0.01	0.022
090	6C090-42750	COLLAR	1				0.066	0.1452
100	6C040-42730	GRIP LEVER	1				0	0
110	6C040-42760	CUSHION	1				0.003	0.0066
120	6C040-42743	ROD PTO	1				0.15	0.33
130	05525-61000	PIN SNAP	4				0.002	0.0044
140	6C090-42720	LEVER SHIFT ARM	1				0.22	0.484
150	05411-00836	PIN SPRING	1				0.008	0.0176
160	6C050-42642	ROD NEUTRAL SWITCH	1				0.113	0.2486

silverhorn.co.uk

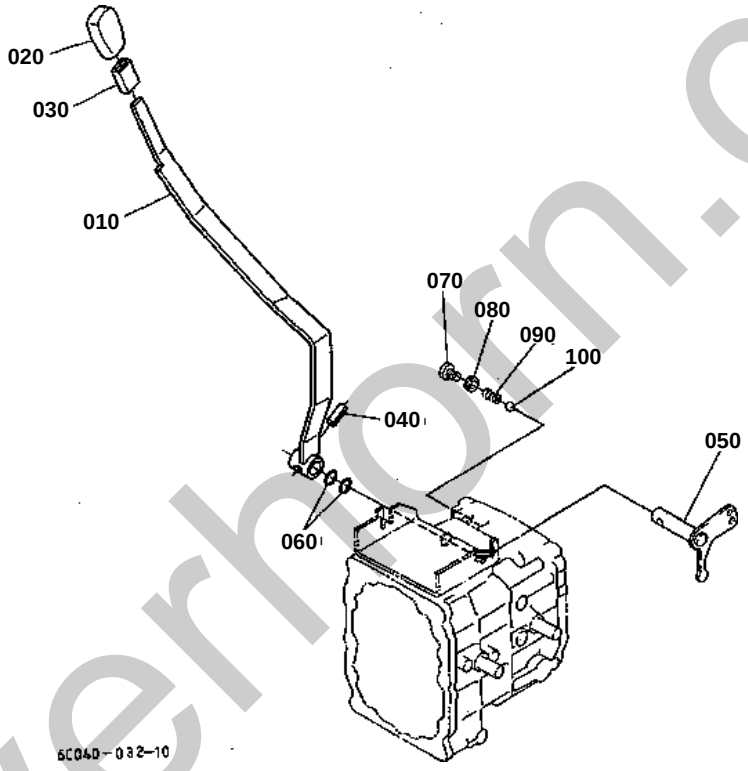

silverhorn.co.uk

FRONT WHEEL DRIVE LEVER

↔ Interchangeable; ≠ not interchangeable; ← new for old; → old for new

REF.No	Part No.	Description	Q'ty	S.No.	I/C	REMARKS	Weight (kgf)	Weight (lb)
010	6C040-42910	LEVER 4WD CHANGE	1				0.66	1.452
020	6C040-42630	GRIP	1	<=12106			0.02	0.044
020	6A320-42630	GRIP	1	>=12107	↔		0.019	0.0418
030	37410-43570	PIPE	1				0.005	0.011
040	05411-00836	PIN SPRING	1				0.008	0.0176
050	6C040-19210	ARM 4WD SHIFT	1				0.19	0.418
060	04811-00160	O RING	2				0.001	0.0022
070	6C040-19222	BOLT	1				0.015	0.033
080	04717-01000	WASHER WITH RUBBER	1				0.001	0.0022
090	62061-18260	SPRING STOPPER	1				0.002	0.0044
100	07715-01605	BALL	1				0.003	0.0066

silverhorn.co.uk

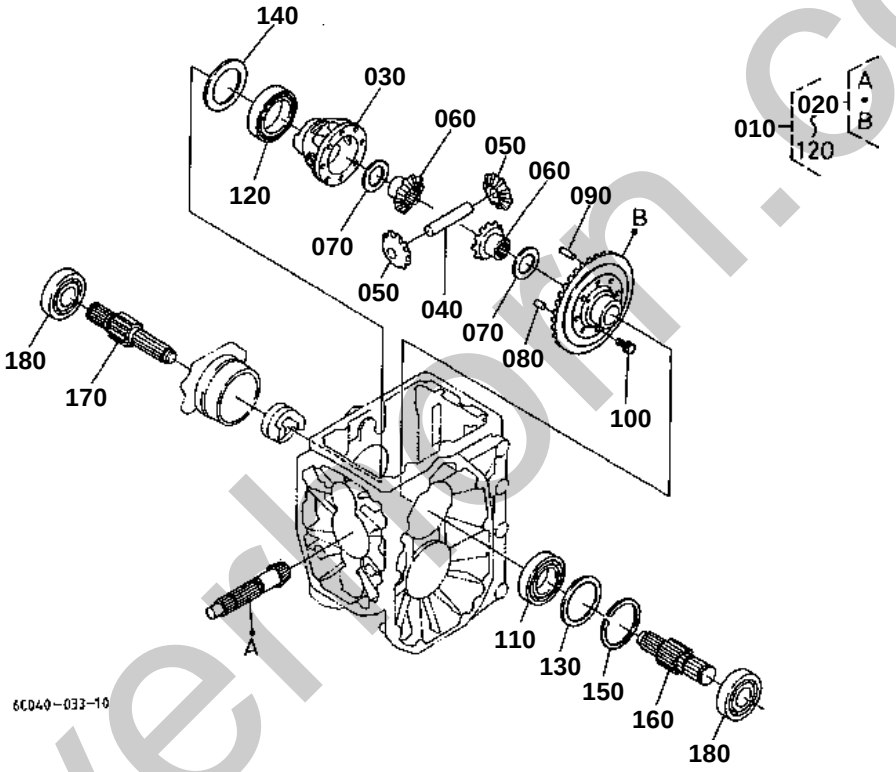

silverkorn.co.uk

REAR DIFFERENTIAL

↔ Interchangeable; ≠ not interchangeable; ← new for old; → old for new

REF.No	Part No.	Description	Q'ty	S.No.	I/C	REMARKS	Weight (kgf)	Weight (lb)
010	6C040-97910	ASSY DIFFERENTIAL	1				4.16	9.152
020	6C040-97920	ASSY GEAR BEVEL	1			6-37T	1.97	4.334
030	6C040-14970	CASE DIFFERENTIAL	1				0.7	1.54
040	67711-14912	SHAFT DIFF.PINION	1				0.14	0.308
050	67711-14920	PINION DIFF.	2				0.11	0.242
060	6C040-14930	GEAR DIFF.SIDE	2				0.165	0.363
070	67211-15160	SHIM	2			1.0MM	0.01	0.022
070	67211-15170	SHIM	2			0.8MM	0.008	0.0176
070	67211-15180	SHIM	2			1.2MM	0.01	0.022
080	66591-14792	PIN KNOCK	1				0.003	0.0066
090	66591-14783	PIN STRAIGHT	1				0.01	0.022
100	67810-56680	BOLT UBS	6				0.013	0.0286
110	08101-06009	BEARING BALL	1				0.22	0.484
120	08101-06010	BEARING BALL	1				0.262	0.5764
130	66591-14980	SHIM DIFF.SIDE	1			0.5MM	0.005	0.011
130	66591-14990	SHIM DIFF.SIDE	1			0.2MM	0.002	0.0044
140	66611-15140	SHIM DIFF.SIDE	1			0.5MM	0.006	0.0132
140	66611-15150	SHIM DIFF.SIDE	1			0.2MM	0.002	0.0044
150	04611-00750	CIR CLIP INTERNAL	1				0.019	0.0418
160	6C040-14940	SHAFT DIFF.GEAR LH	1				0.62	1.364
170	6C040-14950	SHAFT DIFF.GEAR RH	1				0.72	1.584
180	08101-06306	BEARING BALL	2				0.335	0.737

silverhorn.co.uk

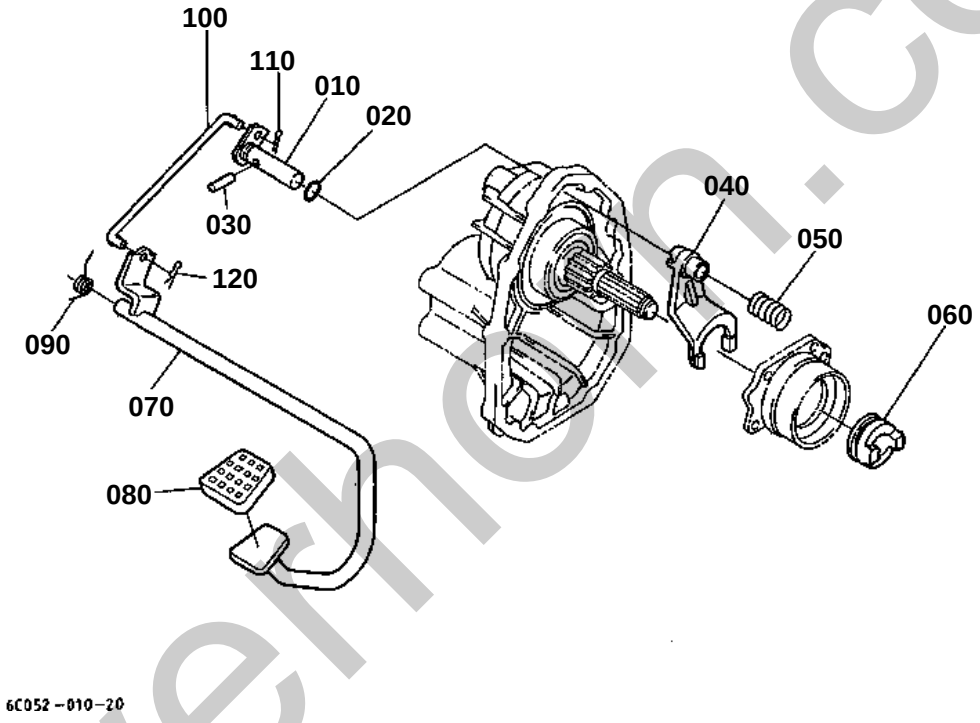

silverthorn.co.uk

DIFFERENTIAL LOCK PEDAL

↔ Interchangeable; ≠ not interchangeable; ← new for old; → old for new

REF.No	Part No.	Description	Q'ty	S.No.	I/C	REMARKS	Weight (kgf)	Weight (lb)
010	6C040-19120	ROD FORK	1				0.17	0.374
020	04811-06120	O RING	1				0.001	0.0022
030	05012-01025	PIN STRAIGHT	1	<=12526			0.016	0.0352
030	6A100-19130	PIN	1	>=12527	↔		0.017	0.0374
040	6C040-19110	FORK DIFF.LOCK SHIFT	1				0.22	0.484
050	6C040-19130	SPRING	1				0.014	0.0308
060	66611-15130	CLUTCH DIFF.LOCK	1				0.2	0.44
070	6C050-42872	PEDAL DIFF.LOCK	1				1.2	2.64
080	37410-42760	COVER PEDAL	1				0.025	0.055
090	6C050-42890	SPRING	1				0.04	0.088
100	6C040-42880	ROD DIFF.LOCK	1				0.1	0.22
110	05511-50215	PIN SPLIT	1				0.001	0.0022
120	05525-50800	PIN SNAP	1				0.001	0.0022

silverhorn.co.uk

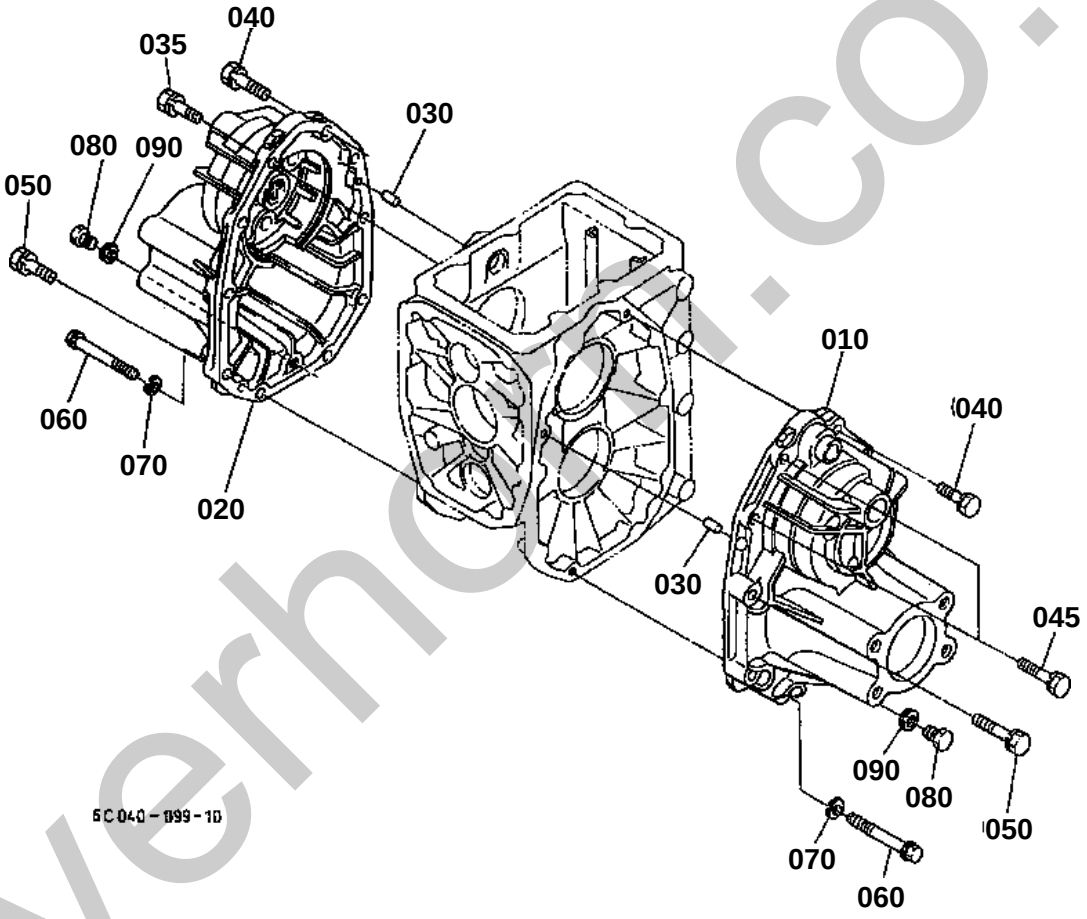

silverhoe.co.uk

010 6C040-1261-3

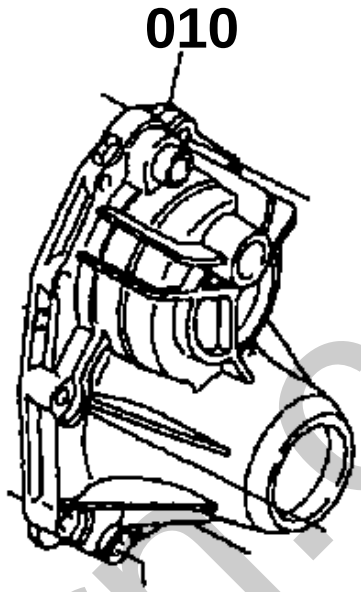

020 6C040-1262-3

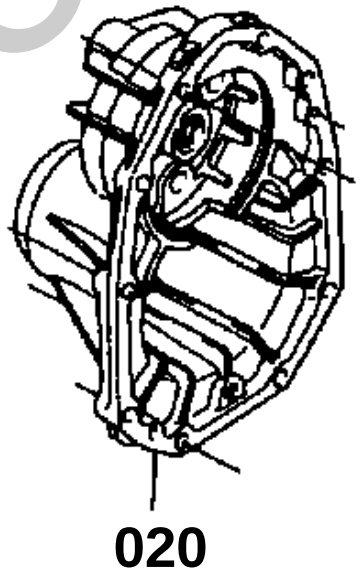

6C040-818-10

silverhorn.co.uk

REAR AXLE CASE

↔ Interchangeable; ≠ not interchangeable; ← new for old; → old for new

REF.No	Part No.	Description	Q'ty	S.No.	I/C	REMARKS	Weight (kgf)	Weight (lb)
010	6C040-12613	CASE AXLE LH	1	<=12526			2.3	5.06
010	K3511-12620	CASE AXLE RH	1	>=12527	↔		2.32	5.104
020	6C040-12623	CASE AXLE RH	1	<=12526			0	0
020	K3511-12610	CASE AXLE LH	1	>=12527	↔		2.42	5.324
030	05012-00614	PIN STRAIGHT	4				0.004	0.0088
035	01123-51035	BOLT	2				0.025	0.055
040	01123-51035	BOLT	4				0.025	0.055
045	01123-51035	BOLT	2				0.025	0.055
050	01123-51050	BOLT	10				0.035	0.077
060	01173-51080	BOLT	2				0.049	0.1078
070	04512-60100	WASHER SPRING	2				0.002	0.0044
080	06331-35012	PLUG	2				0.022	0.0484
090	04717-01200	WASHER WITH RUBBER	2				0.002	0.0044

silverhorn.co.uk

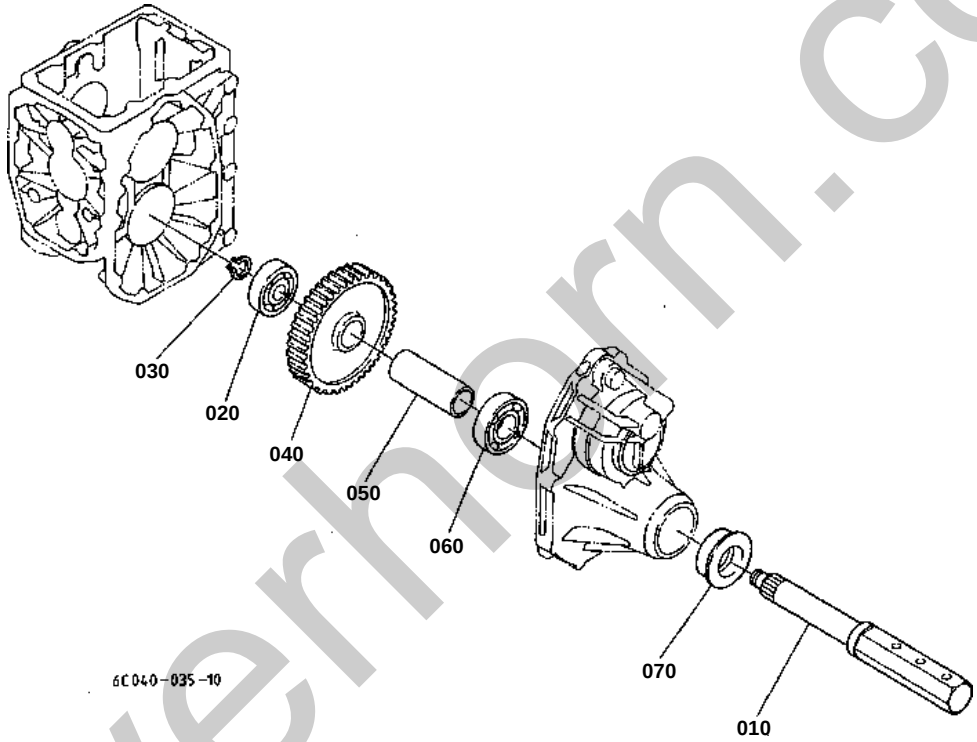

silverhorn.co.uk

REAR AXLE

↔ Interchangeable; ≠ not interchangeable; ← new for old; → old for new

REF.No	Part No.	Description	Q'ty	S.No.	I/C	REMARKS	Weight (kgf)	Weight (lb)
010	66611-17114	AXLE REAR	2				4.64	10.208
020	08101-06306	BEARING BALL	2				0.335	0.737
030	04612-00300	CIRCLIP EXTERNAL	2				0.003	0.0066
040	6C040-17130	GEAR	2			57T	2.55	5.61
050	6C040-17140	COLLAR	2				0.26	0.572
060	08101-06208	BEARING BALL	2				0.355	0.781
070	09500-00014	SEAL OIL	2				0.06	0.132

silverhorn.co.uk

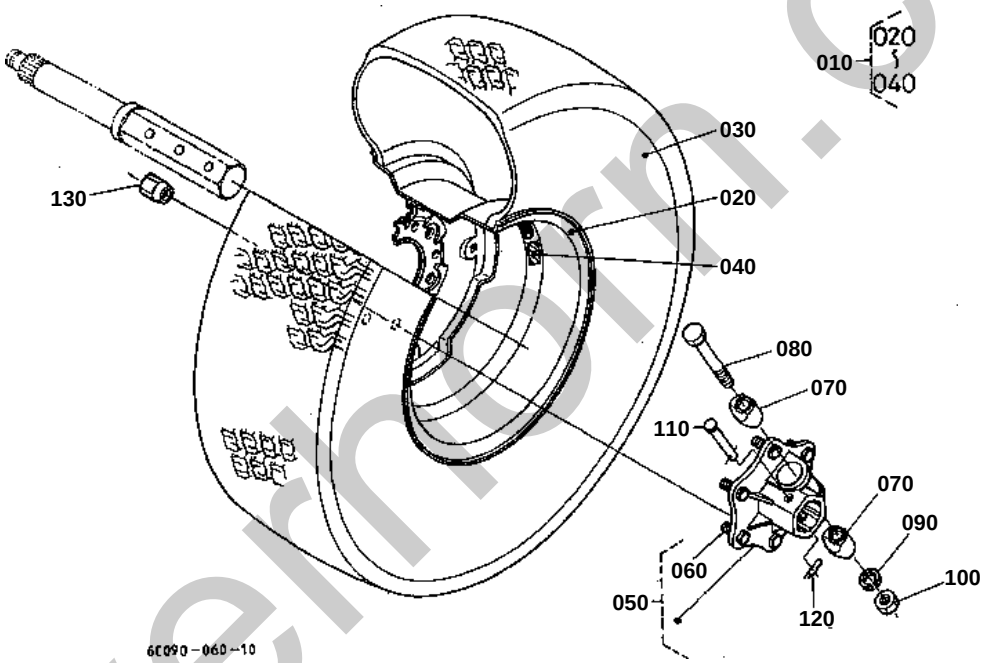

silvermorn.co.uk

REAR WHEEL (29 X 12.5-15)

↔ Interchangeable; ≠ not interchangeable; ← new for old; → old for new

REF.No	Part No.	Description	Q'ty	S.No.	I/C	REMARKS	Weight (kgf)	Weight (lb)
010	66424-17610	ASSY TIRE REAR	2			OBTAINED LOCALLY	0	0
020	66424-17620	WHEEL	2			OBTAINED LOCALLY	0	0
030	35080-11530	TIRE	2			OBTAINED LOCALLY	0	0
040	66424-17640	LABEL	2			OBTAINED LOCALLY	0	0
050	6C040-17410	ASSY HUB WHEEL	2				2.35	5.17
060	66704-17313	BOLT	12				0.049	0.1078
070	6C040-17460	COTTER	4				0.17	0.374
080	01173-61600	BOLT	2				0.165	0.363
090	04512-60160	WASHER SPRING	2				0.01	0.022
100	02174-50160	NUT	2				0.022	0.0484
110	63733-17270	PIN WHEEL TUBE	2				0.05	0.11
120	62131-17290	PIN	2				0.004	0.0088
130	35340-11390	NUT	12				0.03	0.066

silverhorn.co.uk

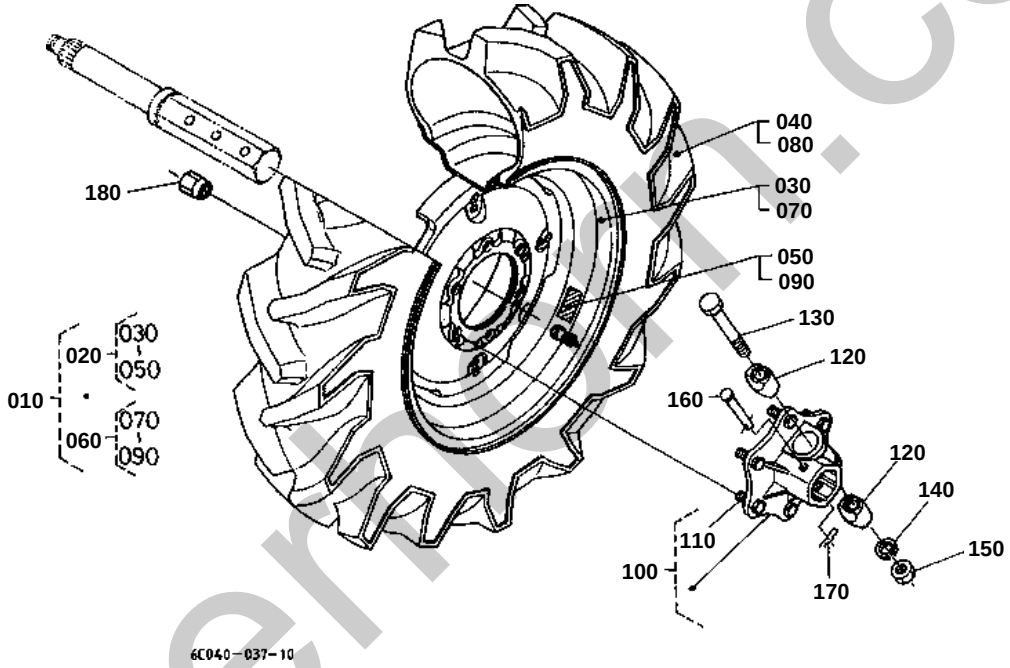

silvermoon.co.uk

↔ Interchangeable; ≠ not interchangeable; ← new for old; → old for new

REF.No	Part No.	Description	Q'ty	S.No.	I/C	REMARKS	Weight (kgf)	Weight (lb)
010	66434-17610	ASSY TIRE REAR	1			OBTAINED LOCALLY	0	0
020	66434-17620	ASSY TIRE LH	1			OBTAINED LOCALLY	0	0
030	66434-17640	WHEEL	1			OBTAINED LOCALLY	0	0
040	66434-17650	TIRE	1			OBTAINED LOCALLY	0	0
050	66434-17660	LABEL TIRE LH	1			OBTAINED LOCALLY	0	0
060	66434-17630	ASSY TIRE RH	1			OBTAINED LOCALLY	0	0
070	66434-17640	WHEEL	1			OBTAINED LOCALLY	0	0
080	66434-17650	TIRE	1			OBTAINED LOCALLY	0	0
090	66434-17670	LABEL TIRE RH	1			OBTAINED LOCALLY	0	0
100	6C040-17410	ASSY HUB WHEEL	2				2.35	5.17
110	66704-17313	BOLT	12				0.049	0.1078
120	6C040-17460	COTTER	4				0.17	0.374
130	01173-61600	BOLT	2				0.165	0.363
140	04512-60160	WASHER SPRING	2				0.01	0.022
150	02174-50160	NUT	2				0.022	0.0484
160	63733-17270	PIN WHEEL TUBE	2				0.05	0.11
170	62131-17290	PIN	2				0.004	0.0088
180	35340-11390	NUT	12				0.03	0.066

silverhorn.co.uk

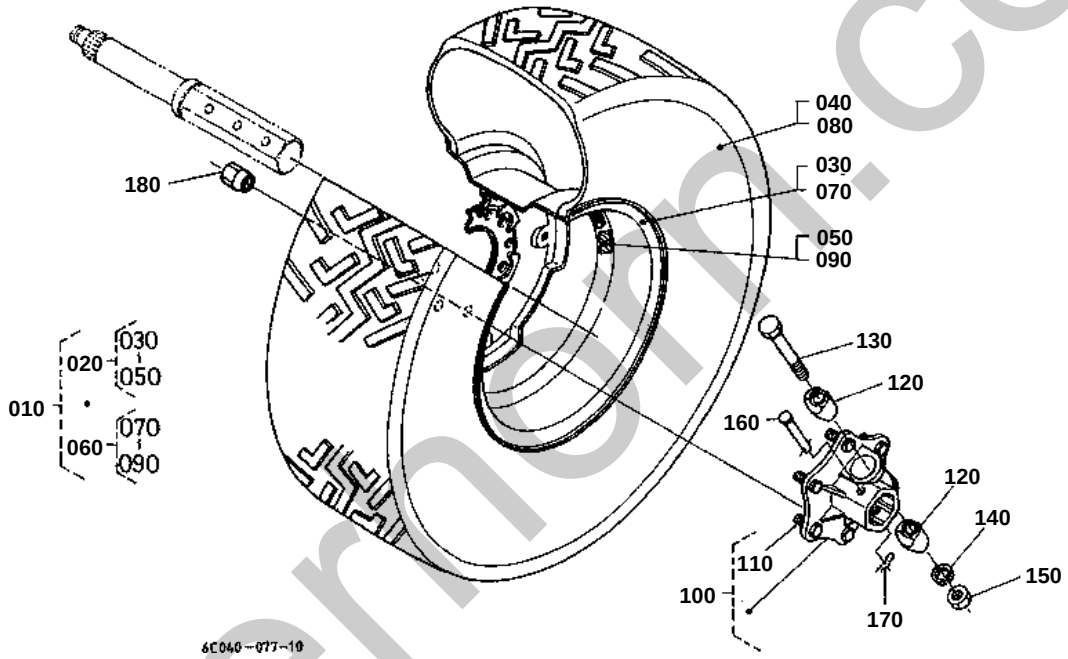

silvermm.co.uk

REAR WHEEL (31 X 15.5-15)

↔ Interchangeable; ≠ not interchangeable; ← new for old; → old for new

REF.No	Part No.	Description	Q'ty	S.No.	I/C	REMARKS	Weight (kgf)	Weight (lb)
010	66437-17610	ASSY TIRE REAR	1			OBTAINED LOCALLY	0	0
020	66437-17620	ASSY LH 31X15.5-15	1			OBTAINED LOCALLY	0	0
030	35080-11540	WHEEL	1			OBTAINED LOCALLY	0	0
040	66437-17630	TIRE	1			OBTAINED LOCALLY	0	0
050	66437-17660	LABEL TIRE LH	1			OBTAINED LOCALLY	0	0
060	66437-17650	ASSY RH 31X15.5-15	1			OBTAINED LOCALLY	0	0
070	35080-11540	WHEEL	1			OBTAINED LOCALLY	0	0
080	66437-17630	TIRE	1			OBTAINED LOCALLY	0	0
090	66437-17670	LABEL TIRE RH	1			OBTAINED LOCALLY	0	0
100	6C040-17410	ASSY HUB WHEEL	2				2.35	5.17
110	66704-17313	BOLT	12				0.049	0.1078
120	6C040-17460	COTTER	4				0.17	0.374
130	01173-61600	BOLT	2				0.165	0.363
140	04512-60160	WASHER SPRING	2				0.01	0.022
150	02174-50160	NUT	2				0.022	0.0484
160	63733-17270	PIN WHEEL TUBE	2				0.05	0.11
170	62131-17290	PIN	2				0.004	0.0088
180	35340-11390	NUT	12				0.03	0.066

silverhorn.co.uk

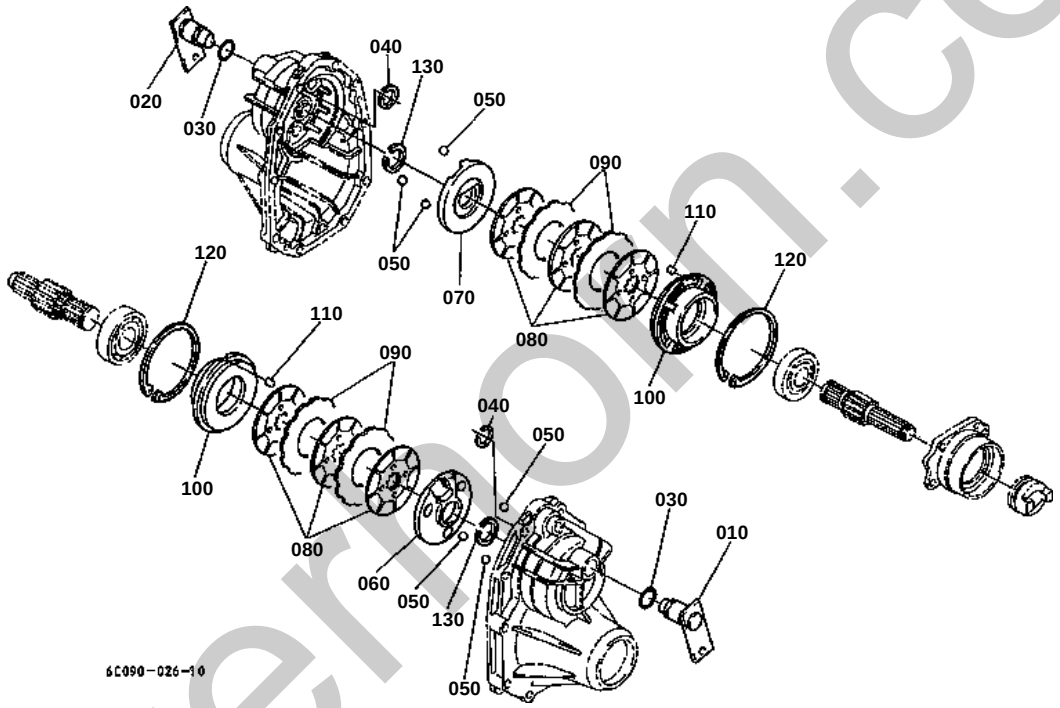

silvermoon.co.uk

↔ Interchangeable; ≠ not interchangeable; ← new for old; → old for new

REF.No	Part No.	Description	Q'ty	S.No.	I/C	REMARKS	Weight (kgf)	Weight (lb)
010	6C040-22360	LEVER CAM LH	1				0.32	0.704
020	6C040-22460	LEVER CAM RH	1				0.33	0.726
030	04811-00210	O RING	2				0.001	0.0022
040	67061-14370	CIR-CLIP	2				0.002	0.0044
050	07715-00805	BALL	6				0.016	0.0352
060	6C090-22320	ACTUATOR LH	1				0.63	1.386
070	6C090-22420	ACTUATOR RH	1				0.63	1.386
080	6C090-22350	DISK BRAKE	6				0.18	0.396
090	6C090-22340	PLATE FRICTION	4				0.12	0.264
100	6C090-22380	HOLDER BEARING	2				0.72	1.584
110	6C040-22440	PIN	2				0.004	0.0088
120	6C040-22450	CIR CLIP INTERNAL	2				0.08	0.176
130	70435-51590	CIR-CLIP	2				0.002	0.0044

silverhorn.co.uk

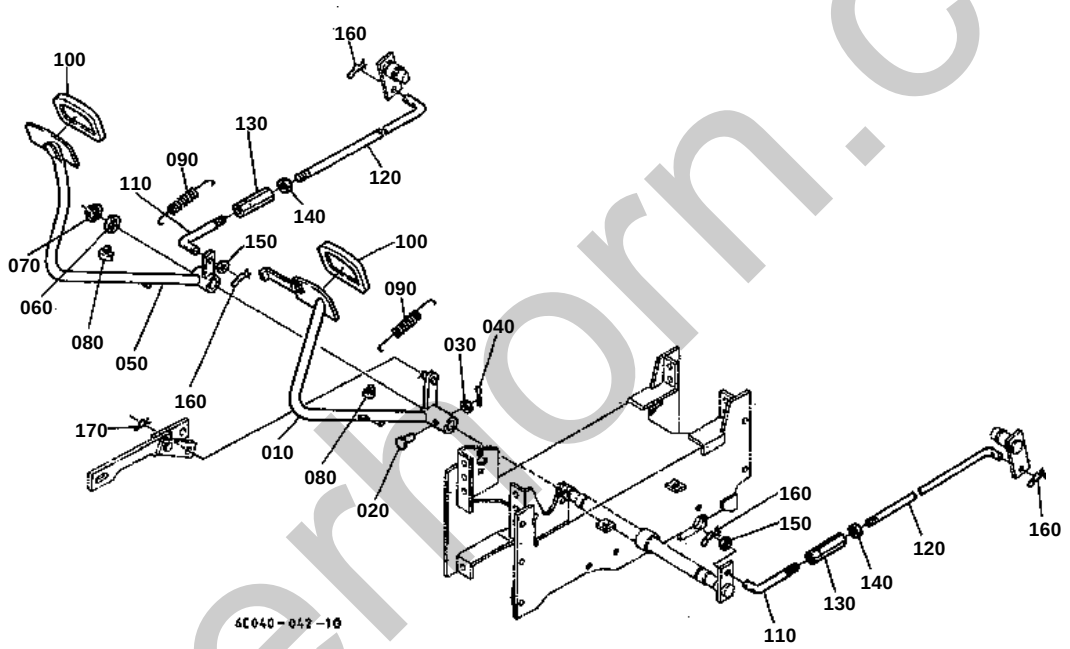

silverthorn.co.uk

BRAKE PEDAL

↔ Interchangeable; ≠ not interchangeable; ← new for old; → old for new

REF.No	Part No.	Description	Q'ty	S.No.	I/C	REMARKS	Weight (kgf)	Weight (lb)
010	6C040-42320	PEDAL BRAKE LH	1				1.76	3.872
020	05122-50840	PIN JOINT	1				0.017	0.0374
030	04012-50080	WASHER PLAIN	1				0.001	0.0022
040	05511-50218	PIN SPLIT	1				0.001	0.0022
050	6C040-42330	PEDAL BRAKE RH	1				1.77	3.894
060	66591-43233	COLLAR	1				0.004	0.0088
070	04612-00240	CIRCLIP EXTERNAL	1				0.002	0.0044
080	6C040-42342	CUSHION	2				0.005	0.011
090	66621-43270	SPRING BRAKE RETURN	2				0.04	0.088
100	37410-44120	COVER PEDAL	2				0.08	0.176
110	6C040-42350	ROD BRAKE FRONT	2				0.068	0.1496
120	6C040-42360	ROD BRAKE REAR	2				0.23	0.506
130	6C040-42370	TURNBUCKLE	2				0.06	0.132
140	02118-50100	NUT	2				0.005	0.011
150	04011-50100	WASHER PLAIN	2				0.002	0.0044
160	52300-34130	PIN SNAP	4				0.004	0.0088
170	05525-50800	PIN SNAP	1				0.001	0.0022

silverhorn.co.uk

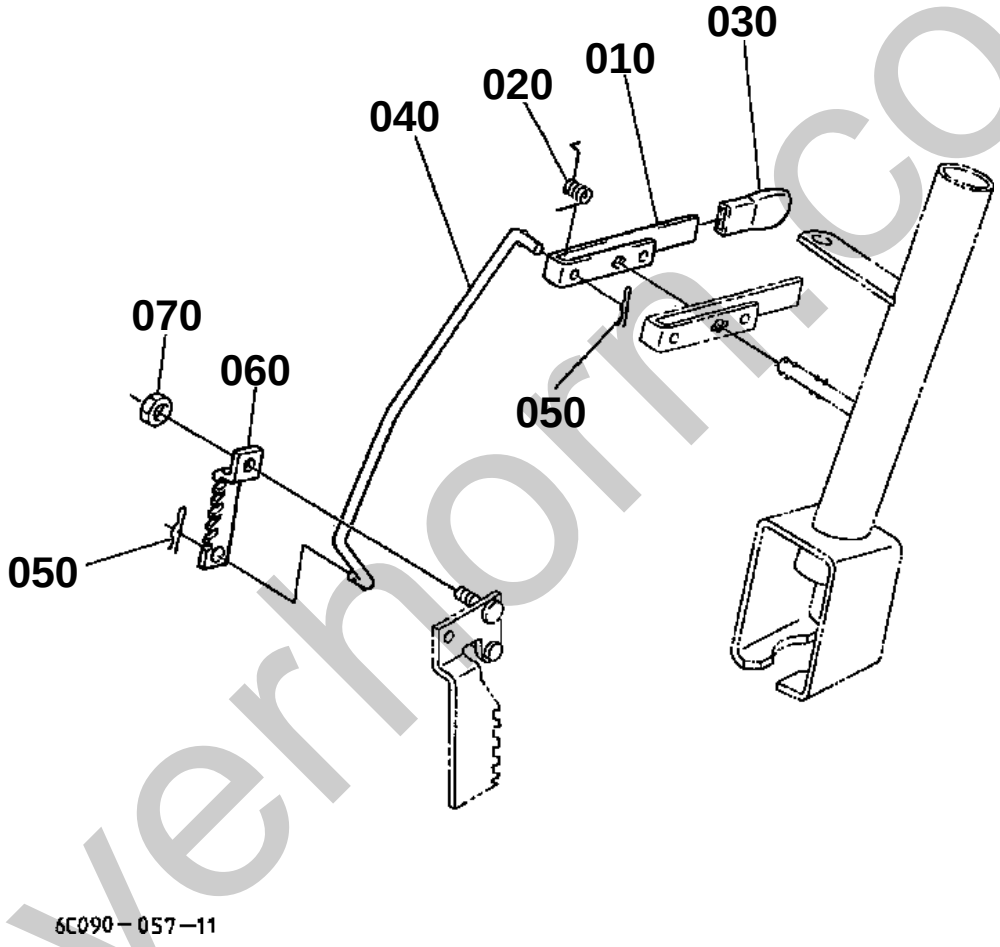

silverhorn.co.uk

PARKING BRAKE LEVER

↔ Interchangeable; ≠ not interchangeable; ← new for old; → old for new

REF.No	Part No.	Description	Q'ty	S.No.	I/C	REMARKS	Weight (kgf)	Weight (lb)
010	6C040-41350	LEVER PARKING	1				0.104	0.2288
020	6C040-41380	SPRING RETURN	1				0.008	0.0176
030	6C040-41360	GRIP LEVER	1				0.012	0.0264
040	6C040-41373	ROD BRAKE	1				0.22	0.484
050	05525-50800	PIN SNAP	2				0.001	0.0022
060	6C040-42250	PLATE BRAKE LOCK	1				0.07	0.154
070	50591-62370	NUT	1				0.005	0.011

silverhorn.co.uk

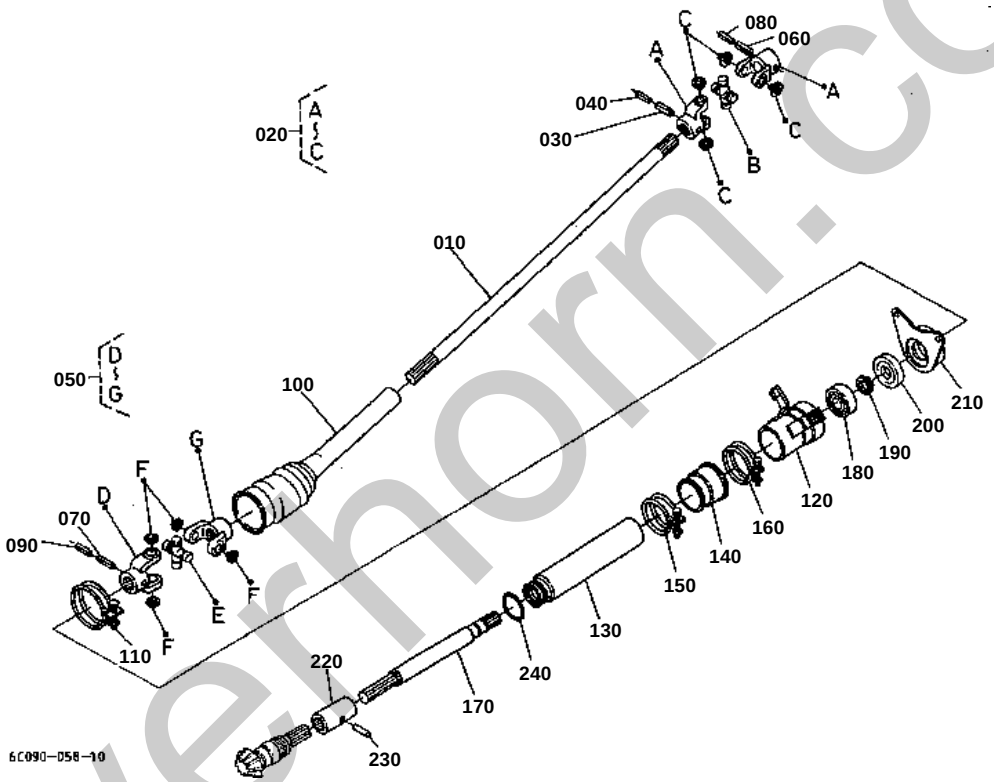

silverhorn.co.uk

FRONT DRIVE SHAFT

↔ Interchangeable; ≠ not interchangeable; ← new for old; → old for new

REF.No	Part No.	Description	Q'ty	S.No.	I/C	REMARKS	Weight (kgf)	Weight (lb)
010	6C050-57512	SHAFT DRIVE REAR	1				1.17	2.574
020	6C040-57500	ASSY JOINT UNIVERSAL	1				0.68	1.496
030	6C040-57590	PIN SPRING	1	<=12526			0	0
030	05411-00640	PIN SPRING	1	>=12527	↔		0.006	0.0132
040	70451-57350	PIN SPRING	1	<=12526			0.005	0.011
040	32721-57680	PIN SPRING	1	>=12527	↔		0.002	0.0044
050	6C040-57542	ASSY JOINT UNIVERSAL	1				0.69	1.518
060	6C040-57590	PIN SPRING	1	<=12526			0	0
060	05411-00640	PIN SPRING	1	>=12527	↔		0.006	0.0132
070	6C040-57590	PIN SPRING	1	<=12526			0	0
070	05411-00640	PIN SPRING	1	>=12527	↔		0.006	0.0132
080	70451-57350	PIN SPRING	1	<=12526			0.005	0.011
080	32721-57680	PIN SPRING	1	>=12527	↔		0.002	0.0044
090	70451-57350	PIN SPRING	1	<=12526			0.005	0.011
090	32721-57680	PIN SPRING	1	>=12527	↔		0.002	0.0044
100	6C040-57550	COVER	1				0.045	0.099
110	09318-89069	CLAMP HOSE	1				0.04	0.088
120	6C040-57610	COVER FRONT SHAFT	1				0.25	0.55
130	6C040-57662	COVER FRONT SHAFT	1				0.25	0.55
140	6C040-57650	COVER FRONT SHAFT	1				0.035	0.077
150	09318-89052	CLAMP HOSE	1				0.03	0.066
160	09318-89058	CLAMP HOSE	1				0.028	0.0616
170	6C040-57622	SHAFT FRONT DRIVE	1				0.73	1.606
180	08141-06204	BEARING BALL	1				0.101	0.2222
190	04612-00200	CIRCLIP EXTERNAL	1				0.001	0.0022
200	6C040-57630	SEAL OIL	1				0.025	0.055
210	6C040-57640	SUPPORT	1				0.14	0.308
220	T0070-14710	COUPLING	1				0.16	0.352
230	05411-00430	PIN SPRING	1				0.002	0.0044
240	04811-06370	O RING	1				0.001	0.0022

silverhorn.co.uk

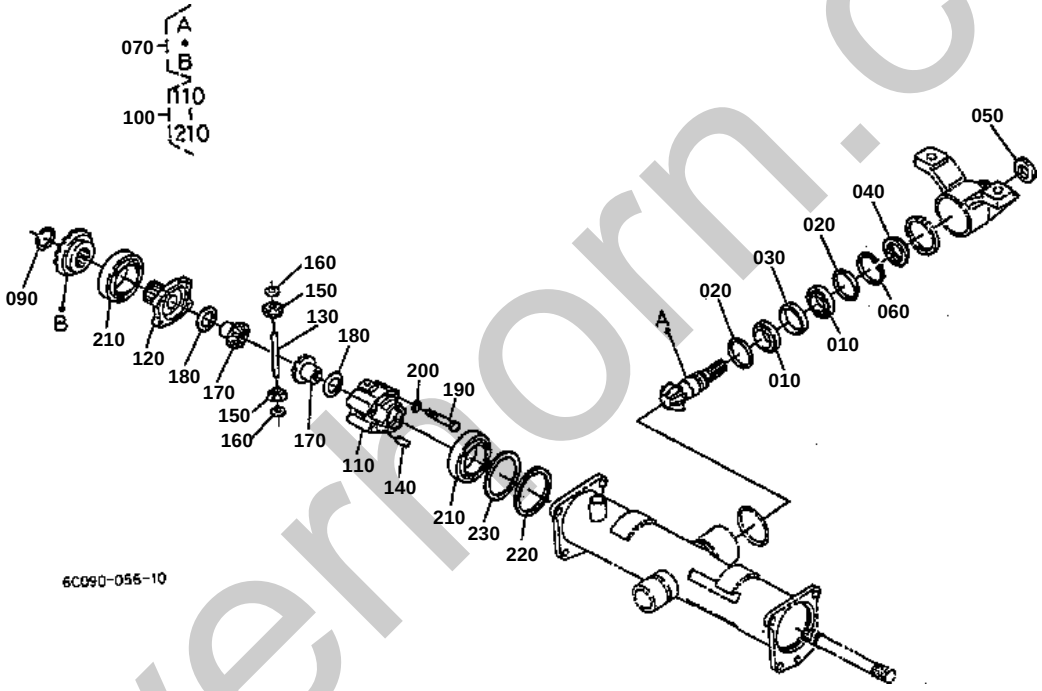

silverthorn.co.uk

↔ Interchangeable; ≠ not interchangeable; ← new for old; → old for new

REF.No	Part No.	Description	Q'ty	S.No.	I/C	REMARKS	Weight (kgf)	Weight (lb)
010	08711-30205	BEARING TAPER-ROLLER	2				0.148	0.3256
020	6C040-56620	COLLAR	2			4.5MM	0.01	0.022
020	37410-58120	COLLAR	2			4.0MM	0.01	0.022
020	37410-58130	COLLAR	2			4.1MM	0.01	0.022
020	37410-58140	COLLAR	2			4.2MM	0.01	0.022
020	6C040-56630	COLLAR	2			3.9MM	0.009	0.0198
020	37410-58150	COLLAR	2			3.8MM	0.01	0.022
020	37410-58160	COLLAR	2			3.4MM	0.01	0.022
020	37410-56660	COLLAR	2			4.6MM	0.011	0.0242
020	37410-58170	COLLAR	2			3.6MM	0.01	0.022
020	37410-56680	COLLAR	2			4.4MM	0.015	0.033
030	37410-56690	COLLAR	1				0.04	0.088
040	37410-56710	NUT	1				0.03	0.066
050	09500-20408	SEAL OIL	1				0.012	0.0264
060	04611-00520	CIR CLIP INTERNAL	1				0.009	0.0198
070	6C040-97960	ASSY GEAR BEVEL	1			11-20T	0.96	2.112
090	6C040-56820	CIRCLIP EXTERNAL	1				0.003	0.0066
100	6C040-56900	ASSY DIFF. FRONT	1				2	4.4
110	6C040-56830	CASE DIFF.FRONT	1				0.73	1.606
120	6C040-56840	COVER DIFF CASE	1				0.3	0.66
130	6C040-56850	SHAFT DIFF.PINION	1				0.05	0.11
140	05411-00425	PIN SPRING	1				0.001	0.0022
150	6C040-56860	GEAR BEVEL	2			10T	0.044	0.0968
160	6C040-56870	SHIM	2			1.0MM	0.002	0.0044
160	6C040-56880	SHIM	2			0.8MM	0.001	0.0022
160	6C040-56890	SHIM	2			1.2MM	0.002	0.0044
170	6C040-56910	GEAR BEVEL	2			14T	0.107	0.2354
180	37410-56930	SHIM	2			1.0MM	0.005	0.011
180	37410-56920	SHIM	2			0.8MM	0.005	0.011
180	37410-56940	SHIM	2			1.2MM	0.01	0.022
190	01156-50855	BOLT	4				0.012	0.0264
200	04512-60080	WASHER SPRING	4				0.002	0.0044
210	08101-06010	BEARING BALL	2				0.262	0.5764
220	6C040-56950	COLLAR	1				0.017	0.0374
230	66611-15150	SHIM DIFF.SIDE	1			0.2MM	0.002	0.0044

silverhorn.co.uk

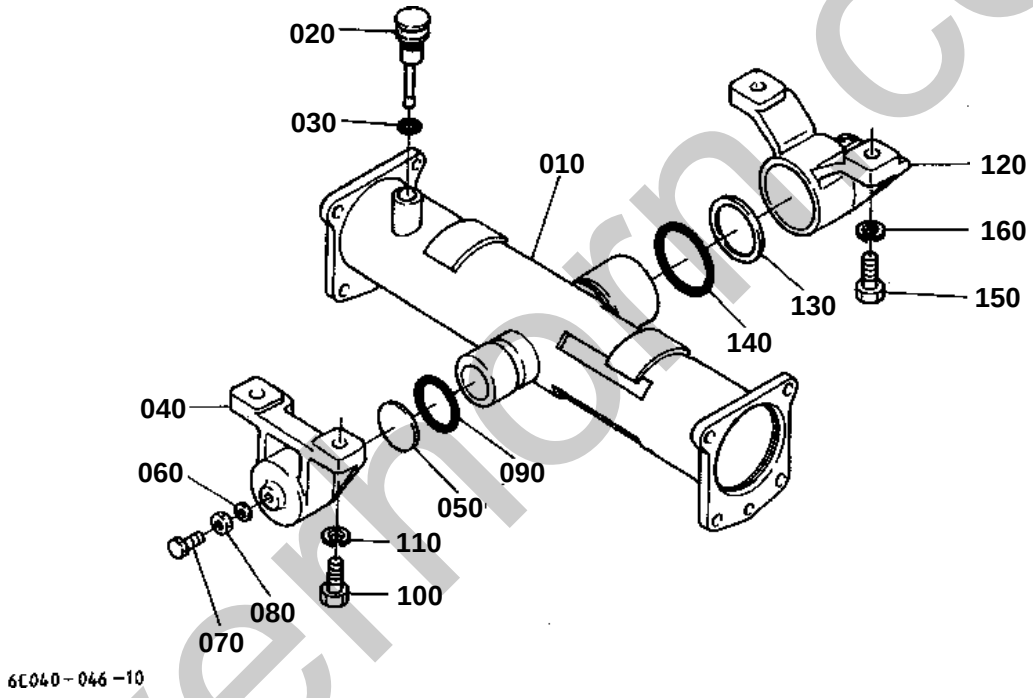

silvermorn.co.uk

FRONT AXLE CASE

↔ Interchangeable; ≠ not interchangeable; ← new for old; → old for new

REF.No	Part No.	Description	Q'ty	S.No.	I/C	REMARKS	Weight (kgf)	Weight (lb)
010	6C040-56110	CASE FRONT AXLE	1				0	0
020	6C040-56123	GAUGE OIL	1				0.024	0.0528
030	04811-00180	O RING	1				0.001	0.0022
040	6C040-56133	HOLDER FRONT AXLE	1				1.18	2.596
050	37410-56180	COLLAR THRUST	1				0.07	0.154
060	31351-16250	WASHER SEAL	1				0.015	0.033
070	01173-51030	BOLT	1				0.023	0.0506
080	02076-50100	NUT	1				0.006	0.0132
090	04811-50450	O RING	1				0.002	0.0044
100	01173-51440	BOLT	2				0.062	0.1364
110	04512-60140	WASHER SPRING	2				0.006	0.0132
120	6C040-56140	HOLDER FRONT AXLE	1				1.37	3.014
130	6C040-56150	COLLAR THRUST	1				0.02	0.044
140	04811-50600	O RING	1				0.002	0.0044
150	01173-51440	BOLT	2				0.062	0.1364
160	04512-60140	WASHER SPRING	2				0.006	0.0132

silverhorn.co.uk

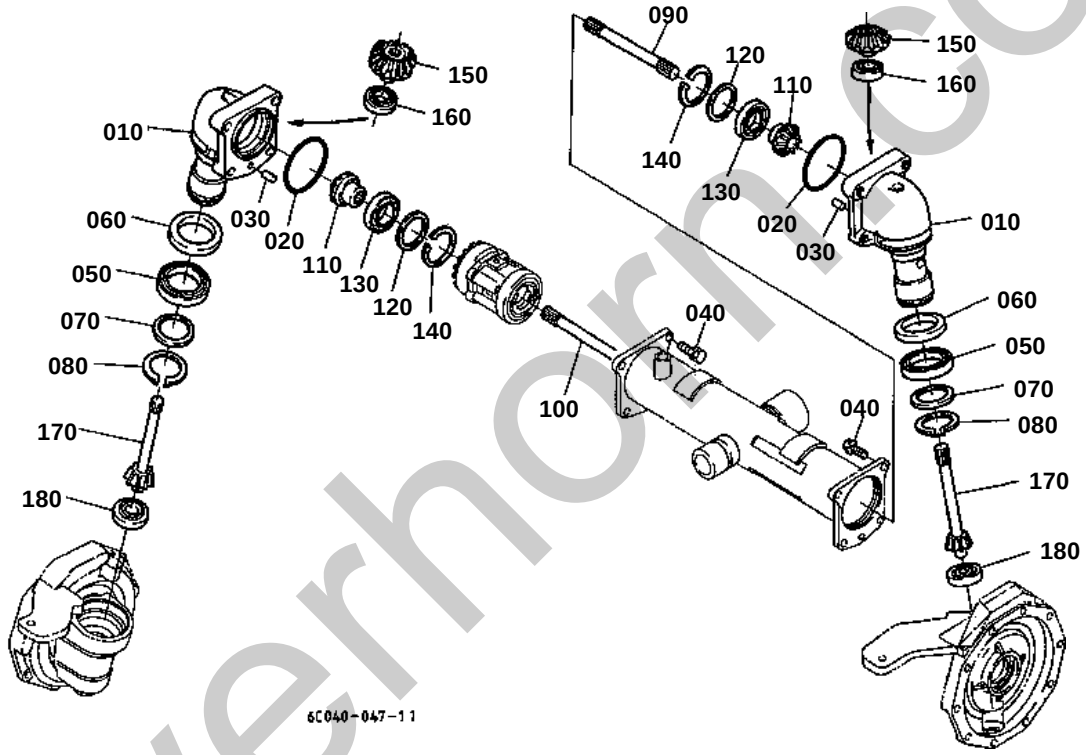

silverhorn.co.uk

FRONT BEVEL GEAR CASE

↔ Interchangeable; ≠ not interchangeable; ← new for old; → old for new

REF.No	Part No.	Description	Q'ty	S.No.	I/C	REMARKS	Weight (kgf)	Weight (lb)
010	6C040-56210	CASE BEVEL GEAR	2	<=10011			0	0
010	6C040-56213	CASE BEVEL GEAR	2	>=10012	←		3.3	7.26
020	04811-50850	O RING	2				0.003	0.0066
030	05012-01020	PIN STRAIGHT	2				0.02	0.044
040	01133-51230	BOLT	8				0.04	0.088
050	08101-06911	BEARING BALL	2				0.2	0.44
060	37410-56220	SEAL OIL	2				0.065	0.143
070	6C040-56350	COLLAR THRUST	2				0.017	0.0374
080	04612-00550	CIRCLIP EXTERNAL	2				0.01	0.022
090	6C040-57110	SHAFT YOKE LH	1				0.37	0.814
100	67950-57110	SHAFT YOKE LH	1				0.68	1.496
110	37410-57130	GEAR BEVEL	2			11T	0.25	0.55
120	6C040-57130	SHIM	2			1.0MM	0.008	0.0176
120	6C040-57140	SHIM	2			0.8MM	0.006	0.0132
120	6C040-57150	SHIM	2			1.2MM	0.009	0.0198
120	6C040-57160	SHIM	2			1.4MM	0.011	0.0242
130	08101-06007	BEARING BALL	2				0.16	0.352
140	04611-00620	CIR CLIP INTERNAL	2				0.011	0.0242
150	37410-57180	GEAR BEVEL	2			16T	0.32	0.704
160	67910-14230	BEARING BALL	2				0.084	0.1848
170	6C040-57210	SHAFT GEAR	2			7T	0.5	1.1
180	08101-06304	BEARING BALL	2				0.146	0.3212

silverhorn.co.uk

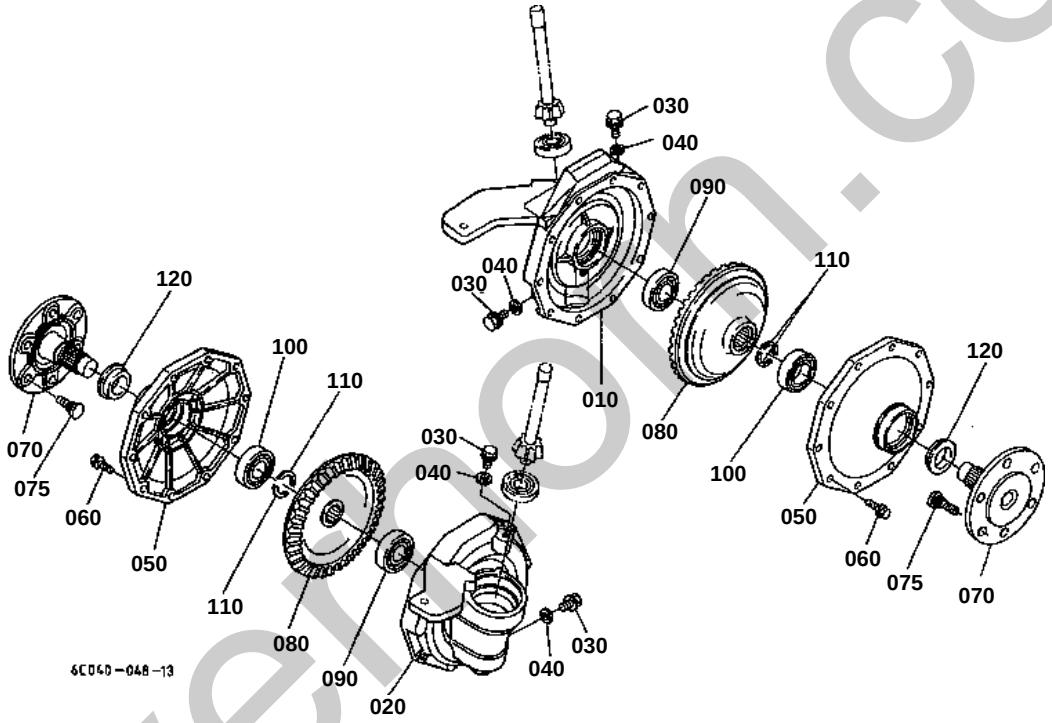

silvermoth.co.uk

030 06331-35010

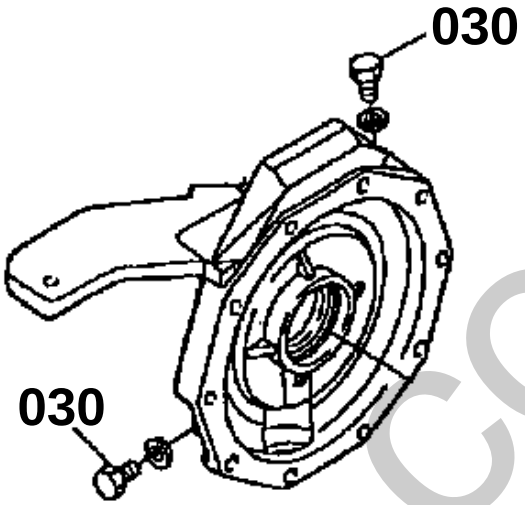

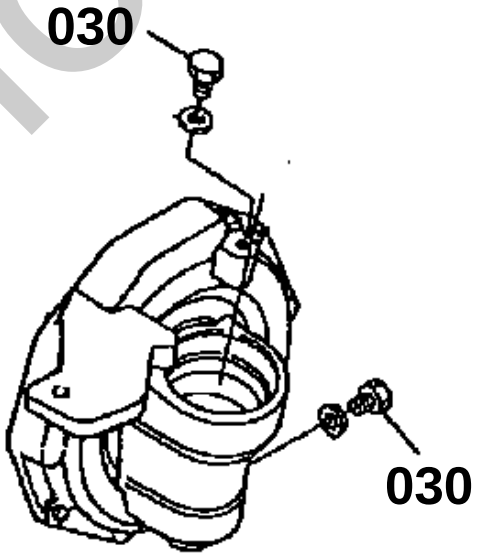

6C090-801-10

silverhorn.co.uk

FRONT AXLE

↔ Interchangeable; ≠ not interchangeable; ← new for old; → old for new

REF.No	Part No.	Description	Q'ty	S.No.	I/C	REMARKS	Weight (kgf)	Weight (lb)
010	6C040-56370	CASE GEAR LH	1	<=10011			7.8	17.16
010	6C040-56372	CASE GEAR LH	1	>=10012	≠		8	17.6
020	6C040-56360	CASE GEAR RH	1	<=10011			7.3	16.06
020	6C040-56363	CASE GEAR RH	1	>=10012	≠		7.4	16.28
030	06331-35010	PLUG	4	<=14989			0.012	0.0264
030	01774-51010	BOLT FLANGE	4	>=14990	←		0.08	0.176
040	04717-01000	WASHER WITH RUBBER	4				0.001	0.0022
050	6C040-56340	COVER GEAR CASE	2	<=17617			0	0
050	6C040-56345	COVER GEAR CASE	2	>=17618	←		0.84	1.848
060	01133-51028	BOLT	20				0.027	0.0594
070	6A100-57320	SHAFT FRONT AXLE	2				1.7	3.74
075	6C040-57330	BOLT	12				0.035	0.077
080	6C040-57310	GEAR BEVEL	2				2.79	6.138
090	08101-06206	BEARING BALL	2				0.196	0.4312
100	08101-06305	BEARING BALL	2				0.23	0.506
110	67156-56820	COLLAR SET	4				0.004	0.0088
120	37410-57340	SEAL OIL	2				0	0

silverhorn.co.uk

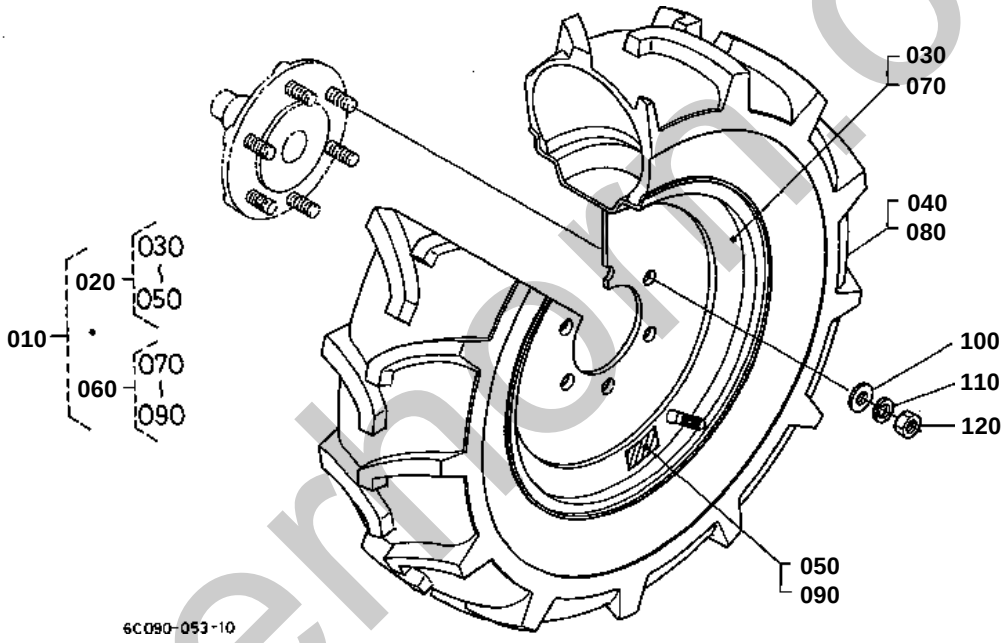

silverhorn.co.uk

FRONT WHEEL (6-12)

↔ Interchangeable; ≠ not interchangeable; ← new for old; → old for new

REF.No	Part No.	Description	Q'ty	S.No.	I/C	REMARKS	Weight (kgf)	Weight (lb)
010	6C040-50210	ASSY TIRE FRONT	1			OBTAINED LOCALLY	0	0
020	6C040-50220	ASSY TIRE LH	1			OBTAINED LOCALLY	0	0
030	6C040-50240	WHEEL	1			OBTAINED LOCALLY	0	0
040	66434-57140	TIRE(6-12B US)	1			OBTAINED LOCALLY	0	0
050	6C040-50250	LABEL LH(6-12B)	1			OBTAINED LOCALLY	0	0
060	6C040-50230	ASSY TIRE RH	1			OBTAINED LOCALLY	0	0
070	6C040-50240	WHEEL	1			OBTAINED LOCALLY	0	0
080	66434-57140	TIRE(6-12B US)	1			OBTAINED LOCALLY	0	0
090	6C040-50260	LABEL RH(6-12B)	1			OBTAINED LOCALLY	0	0
100	04013-60120	WASHER PLAIN	12				0.01	0.022
110	04512-60120	WASHER SPRING	12				0.005	0.011
120	02176-50120	NUT	12				0.01	0.022

silverhorn.co.uk

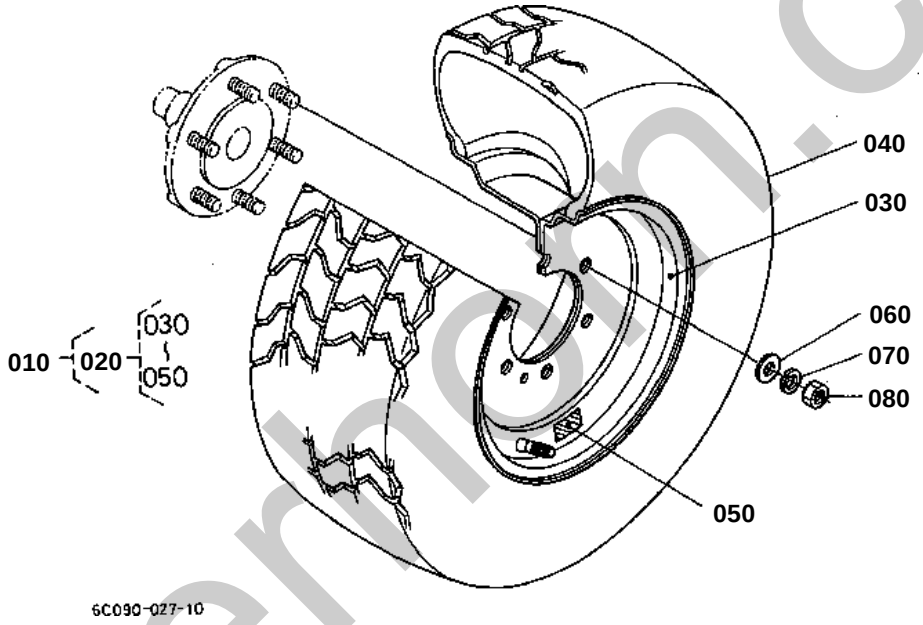

silverhorn.co.uk

FRONT WHEEL (21 X 8.00-10)

↔ Interchangeable; ≠ not interchangeable; ← new for old; → old for new

REF.No	Part No.	Description	Q'ty	S.No.	I/C	REMARKS	Weight (kgf)	Weight (lb)
010	6C040-50510	ASSY TIRE FRONT	1			OBTAINED LOCALLY	0	0
020	6C040-50520	ASSY TIRE	2			OBTAINED LOCALLY	0	0
030	6C040-50530	WHEEL	2			OBTAINED LOCALLY	0	0
040	67404-57130	TIRE	2			OBTAINED LOCALLY	0	0
050	6C040-50540	LABEL	2			OBTAINED LOCALLY	0	0
060	04013-60120	WASHER PLAIN	12				0.01	0.022
070	04512-60120	WASHER SPRING	12				0.005	0.011
080	02176-50120	NUT	12				0.01	0.022

silverhorn.co.uk

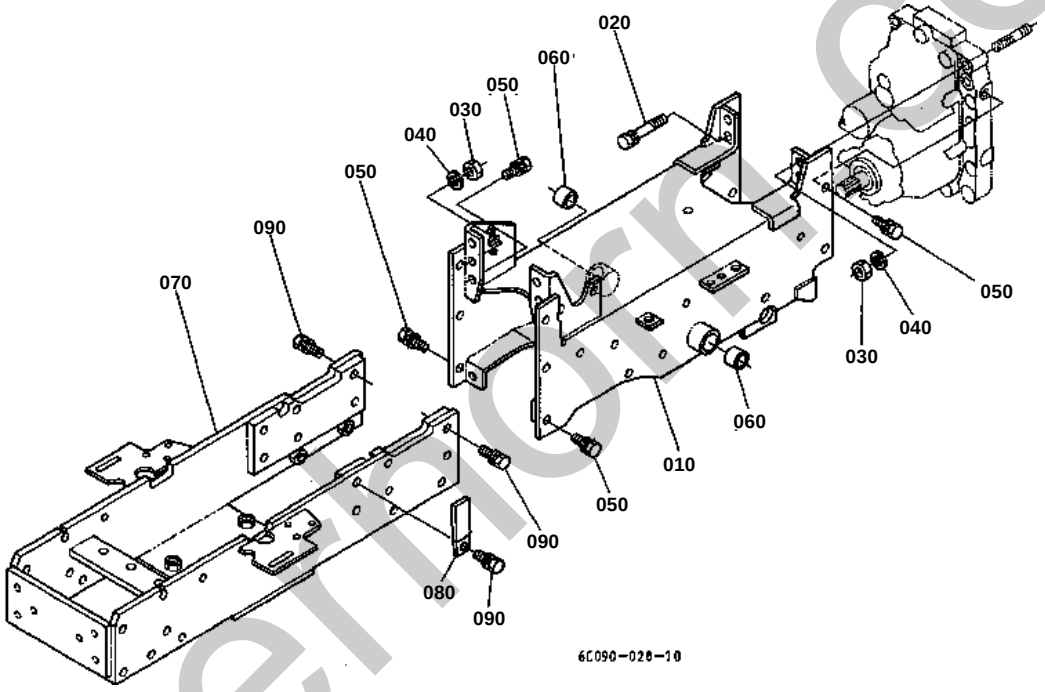

silvermorn.co.uk

FRAME

↔ Interchangeable; ≠ not interchangeable; ← new for old; → old for new

REF.No	Part No.	Description	Q'ty	S.No.	I/C	REMARKS	Weight (kgf)	Weight (lb)
010	6C040-51118	COMP.FRAME CENTER	1				15	33
020	01123-51265	BOLT	2				0.063	0.1386
030	02174-50120	NUT	8				0.01	0.022
040	04512-60120	WASHER SPRING	8				0.005	0.011
050	01123-51230	BOLT	12				0.04	0.088
060	08511-02515	BUSH	2				0.012	0.0264
070	6C090-51210	COMP.FRAME FRONT	1				23.6	51.92
080	35340-29380	CLAMP CORD	1				0.01	0.022
090	01133-51035	BOLT	12				0.03	0.066

silverhorn.co.uk

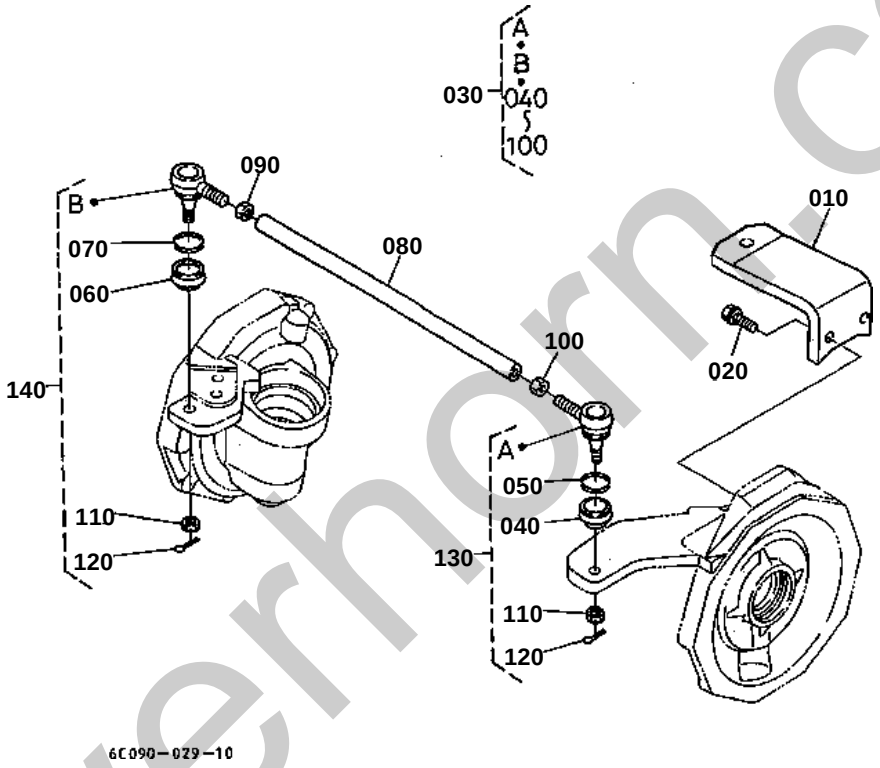

silverhorn.co.uk

KNUCKLE ARM/TIE ROD

↔ Interchangeable; ≠ not interchangeable; ← new for old; → old for new

REF.No	Part No.	Description	Q'ty	S.No.	I/C	REMARKS	Weight (kgf)	Weight (lb)
010	6C090-56410	ARM KNUCKLE	1				1.47	3.234
020	01138-61235	BOLT	2				0.02	0.044
030	6C040-56420	ASSY ROD TIE	1				1.6	3.52
040	67121-56560	COVER DUST	1				0.008	0.0176
050	67121-56570	CLIP	1				0.003	0.0066
060	67121-56560	COVER DUST	1				0.008	0.0176
070	67121-56570	CLIP	1				0.003	0.0066
080	6C040-56590	ROD TIE	1				1.2	2.64
090	67121-56540	NUT	1				0.007	0.0154
100	02172-50120	NUT	1				0.01	0.022
110	66591-56780	NUT	2				0.01	0.022
120	05511-50322	PIN SPLIT	2				0.002	0.0044
130	67950-56530	ASSY END ROD RH	1				0.24	0.528
140	67950-56520	ASSY END ROD LH	1				0.24	0.528

silverhorn.co.uk

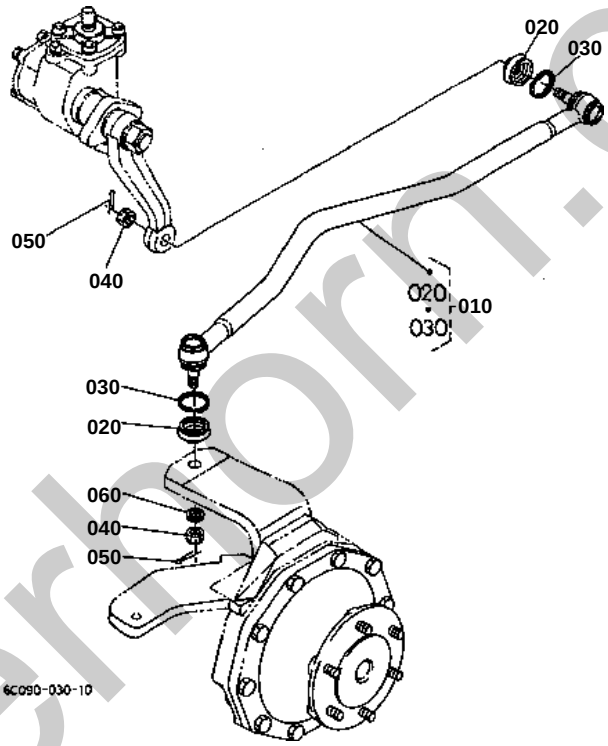

silverthorn.co.uk

DRAG LINK

↔ Interchangeable; ≠ not interchangeable; ← new for old; → old for new

REF.No	Part No.	Description	Q'ty	S.No.	I/C	REMARKS	Weight (kgf)	Weight (lb)
010	6C090-57710	ASSY LINK DRAG	1				2.55	5.61
020	67121-56560	COVER DUST	2				0.008	0.0176
030	67121-56570	CLIP	2				0.003	0.0066
040	66591-56780	NUT	2				0.01	0.022
050	05511-50322	PIN SPLIT	2				0.002	0.0044
060	04512-60100	WASHER SPRING	1				0.002	0.0044

silverhorn.co.uk

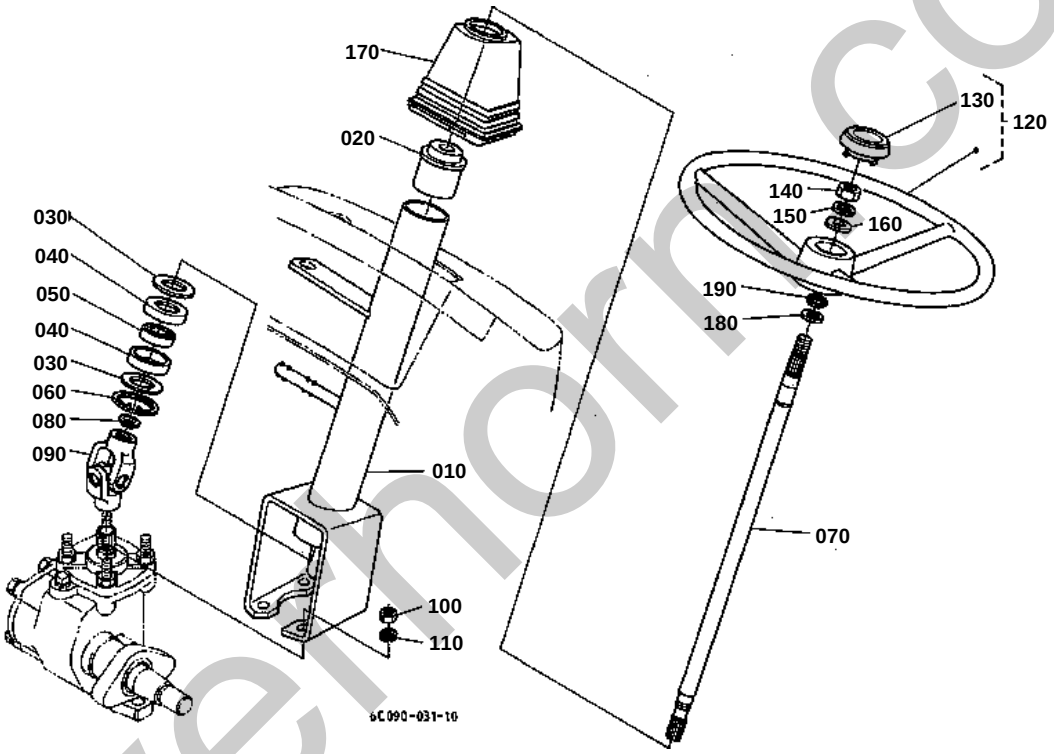

silvermorn.co.uk

070 6C090-4134-0

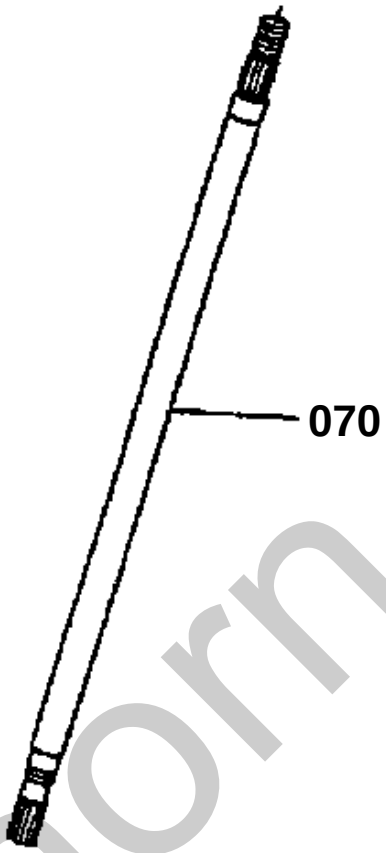

6C090-800-10

silverhorn.co.uk

STEERING WHEEL

↔ Interchangeable; ≠ not interchangeable; ← new for old; → old for new

REF.No	Part No.	Description	Q'ty	S.No.	I/C	REMARKS	Weight (kgf)	Weight (lb)
010	6C090-41323	POST STEERING	1				0	0
020	6C040-41510	BUSH	1				0.035	0.077
030	6C040-41390	COLLAR	2				0.007	0.0154
040	6C040-41523	COVER BEARING	2				0.007	0.0154
050	08121-06002	BEARING BALL	1				0.03	0.066
060	04611-00420	CIR CLIP INTERNAL	1				0.006	0.0132
070	6C090-41340	SHAFT JOINT	1	<=10535			0	0
070	6C090-41343	SHAFT JOINT	1	>=10536	←		0.66	1.452
080	04612-00150	CIRCLIP EXTERNAL	1				0.001	0.0022
090	6C040-41330	JOINT UNIVERSAL	1				0.29	0.638
100	02156-50080	NUT	4				0.004	0.0088
110	04512-60080	WASHER SPRING	4				0.002	0.0044
120	32400-16800	ASSY WHEEL STEERING	1				1.96	4.312
130	32400-16820	PAD STEERING	1				0.05	0.11
140	02172-50120	NUT	1				0.01	0.022
150	04512-60120	WASHER SPRING	1				0.005	0.011
160	04013-60120	WASHER PLAIN	1				0.01	0.022
170	6C040-53553	BOOT STEERING	1				0.075	0.165
180	04013-60160	WASHER PLAIN	1	>=10536			0.01	0.022
190	04612-00160	CIR-CRIP EXTERNAL	1	>=10536			0.001	0.0022

silverhorn.co.uk

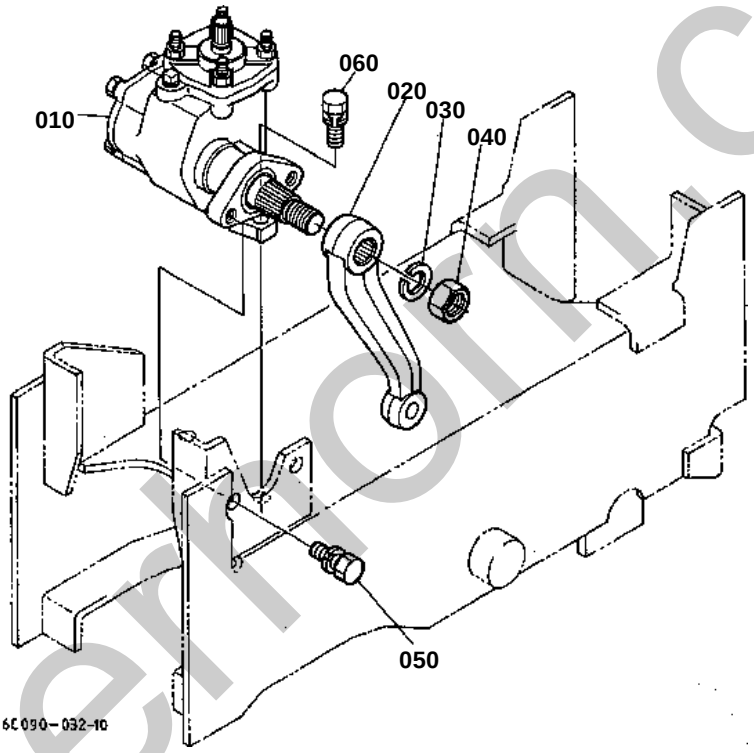

silverhorn.co.uk

↔ Interchangeable; ≠ not interchangeable; ← new for old; → old for new

REF.No	Part No.	Description	Q'ty	S.No.	I/C	REMARKS	Weight (kgf)	Weight (lb)
010	6C090-41100	ASSY STEERING	1			REFER TO L.NO.0D14-L0 FOR COMPONENTS.	2	4.4
020	6C090-41210	ARM PITMAN	1				0.606	1.3332
030	04512-60200	WASHER SPRING	1				0.02	0.044
040	02172-50200	NUT	1				0.03	0.066
050	01133-51230	BOLT	2				0.04	0.088
060	01133-51235	BOLT	2				0.05	0.11

silverhorn.co.uk

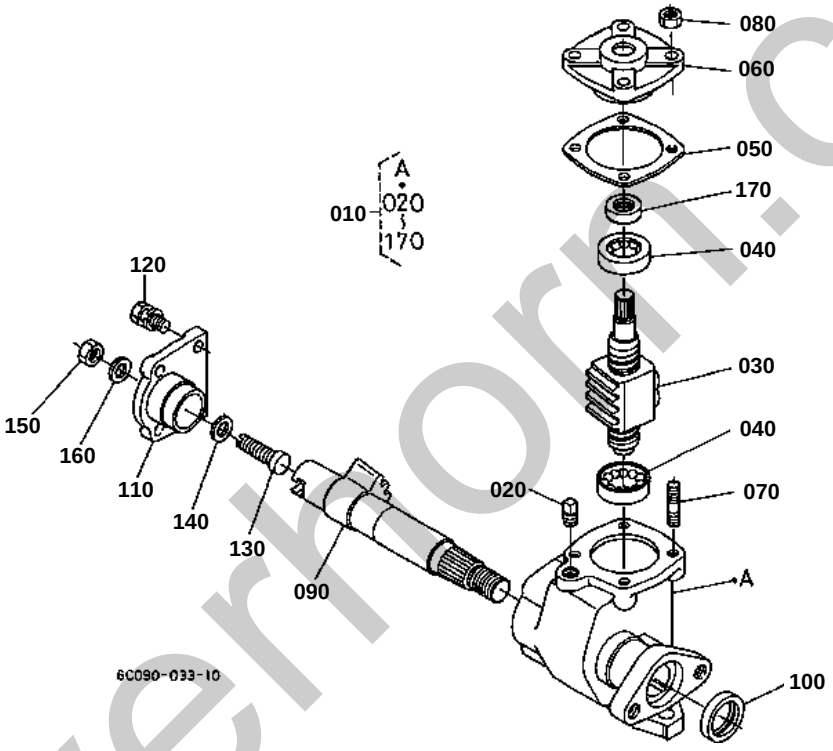

silvermorn.co.uk

↔ Interchangeable; ≠ not interchangeable; ← new for old; → old for new

REF.No	Part No.	Description	Q'ty	S.No.	I/C	REMARKS	Weight (kgf)	Weight (lb)
010	6C090-41100	ASSY STEERING	1				2	4.4
020	34150-16640	PLUG	1				0.015	0.033
030	6C090-41200	COMP.NUT BALL	1				0.6	1.32
040	38260-16210	BEARING BALL	2				0.06	0.132
050	6C090-41260	SHIM	1			0.05MM	0.001	0.0022
050	6C090-41270	SHIM	1			0.08MM	0.001	0.0022
050	6C090-41280	SHIM	1			0.10MM	0.001	0.0022
050	6C090-41290	SHIM	1			0.20MM	0.001	0.0022
060	6C090-41130	COVER STEERING	1				0.31	0.682
070	6C090-41120	STUD	4				0.013	0.0286
080	02156-50080	NUT	4				0.004	0.0088
090	6C090-41250	SHAFT SECTOR	1				0.9	1.98
100	09500-26387	SEAL OIL	1				0.008	0.0176
110	6C090-41160	COVER STEERING	1				0.43	0.946
120	01123-50822	BOLT	4				0.012	0.0264
130	6C090-41310	BOLT SECTOR SHAFT	1				0.03	0.066
140	34150-16440	COLLAR ADJUSTING	1			1.515 TO 1.535MM	0.002	0.0044
140	34150-16450	COLLAR ADJUSTING	1			1.545 TO 1.565MM	0.002	0.0044
140	34150-16460	COLLAR ADJUSTING	1			1.575 TO 1.595MM	0.002	0.0044
140	34150-16470	COLLAR ADJUSTING	1			1.605 TO 1.625MM	0.002	0.0044
140	34150-16480	COLLAR ADJUSTING	1			1.635 TO 1.655MM	0.002	0.0044
150	02018-50100	NUT	1				0.011	0.0242
160	31351-16250	WASHER SEAL	1				0.015	0.033
170	09500-16287	SEAL OIL	1				0.01	0.022

silverhorn.co.uk

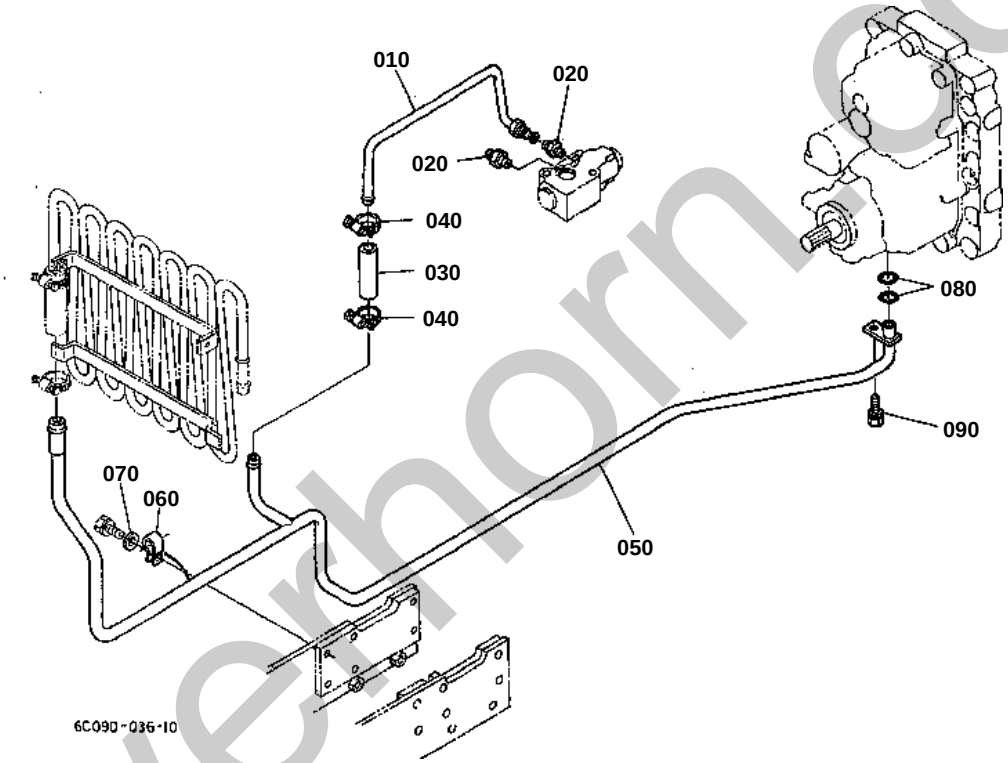

silverthorn.co.uk

HYDRAULIC OIL LINE (OIL COOLER)

↔ Interchangeable; ≠ not interchangeable; ← new for old; → old for new

REF.No	Part No.	Description	Q'ty	S.No.	I/C	REMARKS	Weight (kgf)	Weight (lb)
010	6C090-39220	PIPE DELIVERY	1				0.1	0.22
020	6C042-39430	JOINT PIPE	2				0.04	0.088
030	6C050-58740	HOSE	1				0.021	0.0462
040	6C050-58750	CLAMP HOSE	2				0.02	0.044
050	6C090-39350	PIPE	1				0.412	0.9064
060	6C050-39410	CLAMP PIPE	1				0.013	0.0286
070	04013-60100	WASHER PLAIN	1				0.004	0.0088
080	04811-00100	O RING	2				0.001	0.0022
090	01123-60816	BOLT	1				0.01	0.022

silverhorn.co.uk

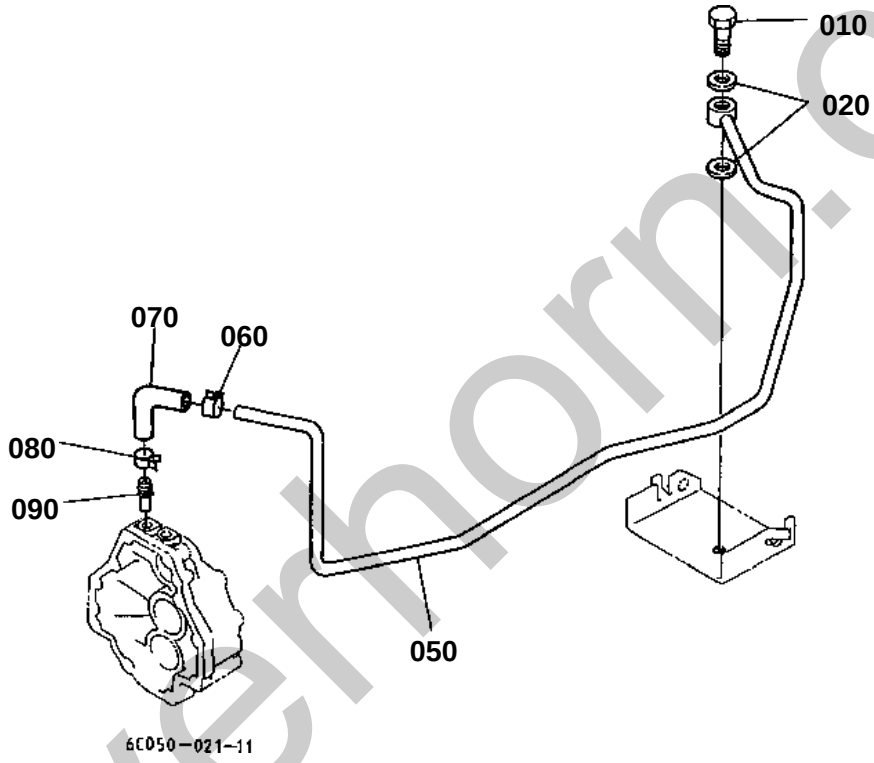

silverhorn.co.uk

HYDRAULIC OIL LINE (T/M)

↔ Interchangeable; ≠ not interchangeable; ← new for old; → old for new

REF.No	Part No.	Description	Q'ty	S.No.	I/C	REMARKS	Weight (kgf)	Weight (lb)
010	6C040-39290	BOLT JOINT	1				0.045	0.099
020	04714-00200	GASKET	2				0.002	0.0044
050	6C050-13173	PIPE HYDRAULIC	1				0.25	0.55
060	09318-88125	CLAMP HOSE	1				0.001	0.0022
070	6C050-13140	HOSE HYDRAULIC	1				0.013	0.0286
080	09318-88115	CLAMP HOSE	1				0.002	0.0044
090	6C050-13190	JOINT	1				0.006	0.0132

silverhorn.co.uk

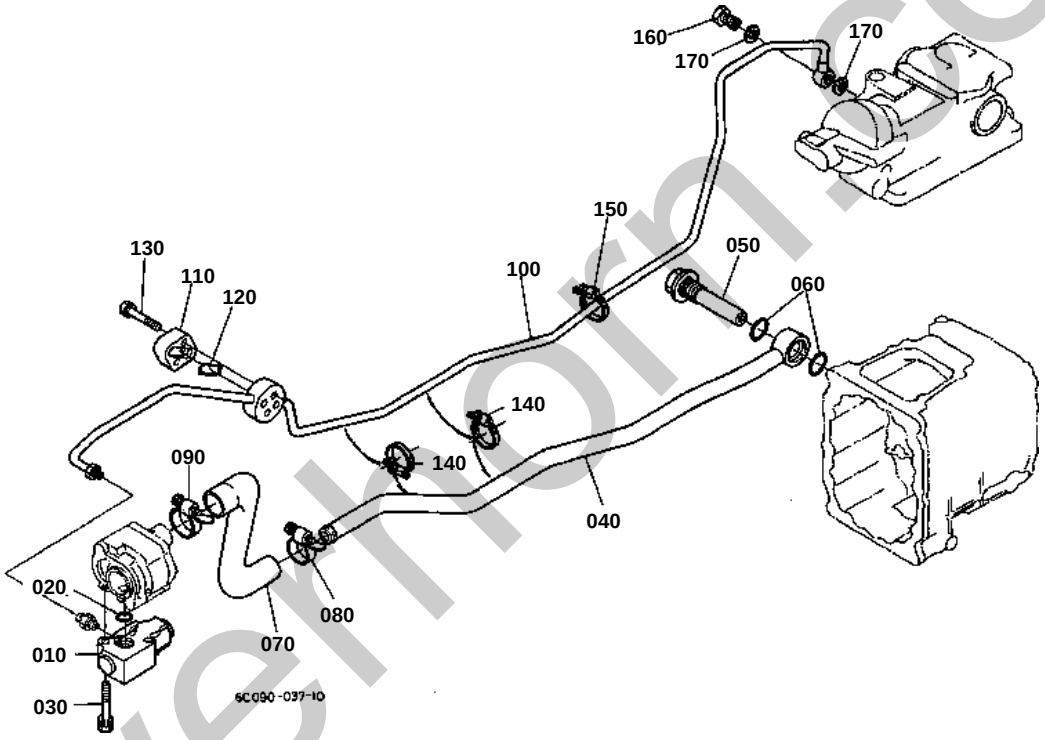

silverthorn.co.uk

HYDRAULIC OIL LINE (SUCTION/DELIVERY)

↔ Interchangeable; ≠ not interchangeable; ← new for old; → old for new

REF.No	Part No.	Description	Q'ty	S.No.	I/C	REMARKS	Weight (kgf)	Weight (lb)
010	6C090-36090	ASSY VALVE FLOW DIV.	1			REFER TO L.NO.0E01-L0 FOR COMPONENTS.	0	0
020	04810-00160	O RING	1				0.001	0.0022
030	01123-50845	BOLT	2				0.02	0.044
040	6C050-39110	PIPE SUCTION	1				0	0
050	66021-36390	FILTER OIL	1				0.185	0.407
060	04811-10300	O RING	2				0.001	0.0022
070	6C090-39150	HOSE INLET	1				0.14	0.308
080	67980-58640	CLAMP HOSE	1				0.02	0.044
090	67955-36230	CLAMP	1				0.023	0.0506
100	6C090-39210	PIPE DELIVERY	1				0.65	1.43
110	6C040-36620	CAP	1				0.022	0.0484
120	37410-36630	O RING	1				0.001	0.0022
130	01123-50830	BOLT	2				0.015	0.033
140	67955-36230	CLAMP	2				0.023	0.0506
150	67980-36250	CLAMP	1				0.021	0.0462
160	6C040-39290	BOLT JOINT	1				0.045	0.099
170	04714-00200	GASKET	2				0.002	0.0044

silverhorn.co.uk

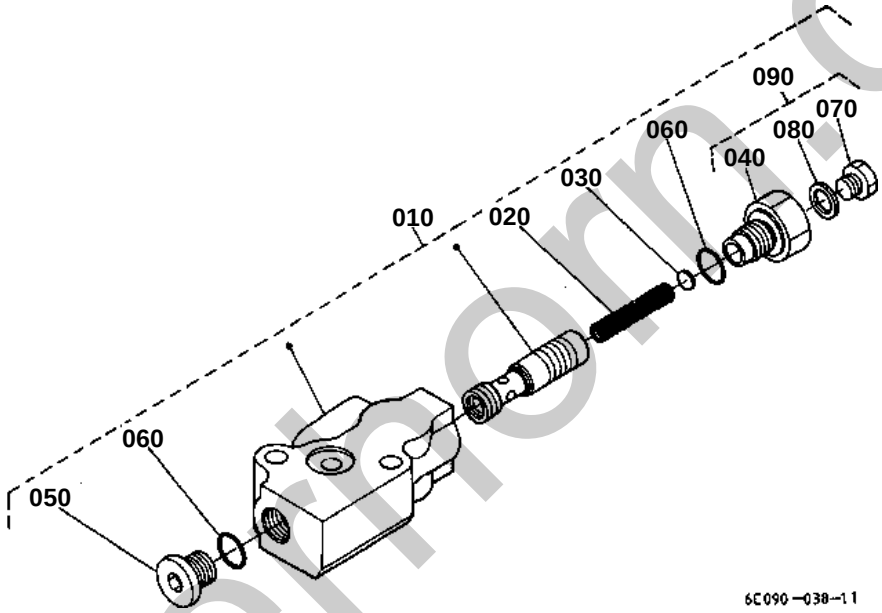

silverhorn.co.uk

FLOW DIVIDING VALVE [COMPONENT PARTS]

↔ Interchangeable; ≠ not interchangeable; ← new for old; → old for new

REF.No	Part No.	Description	Q'ty	S.No.	I/C	REMARKS	Weight (kgf)	Weight (lb)
010	6C090-36090	ASSY VALVE FOW DIV.	1	<=15692			0	0
010	6C090-36094	ASSY VALVE FOW DIV.	1	>=15693	←		1.01	2.222
020	6C040-36140	SPRING	1				0.005	0.011
030	6C040-36150	SHIM	1				0.001	0.0022
040	6C040-36160	PLUG	1	<=15692			0.035	0.077
040	6C090-36160	PLUG	1	>=15693	≠		0.05	0.11
050	6C040-36170	PLUG	1				0.022	0.0484
060	04810-00140	O RING	2				0.001	0.0022
070	6C090-36180	PLUG	1	>=15693			0.008	0.0176
080	6C090-36190	GASKET	1	>=15693			0.001	0.0022
090	6C090-36120	PLUG ASSY	1	>=15693			0.06	0.132

silverhorn.co.uk

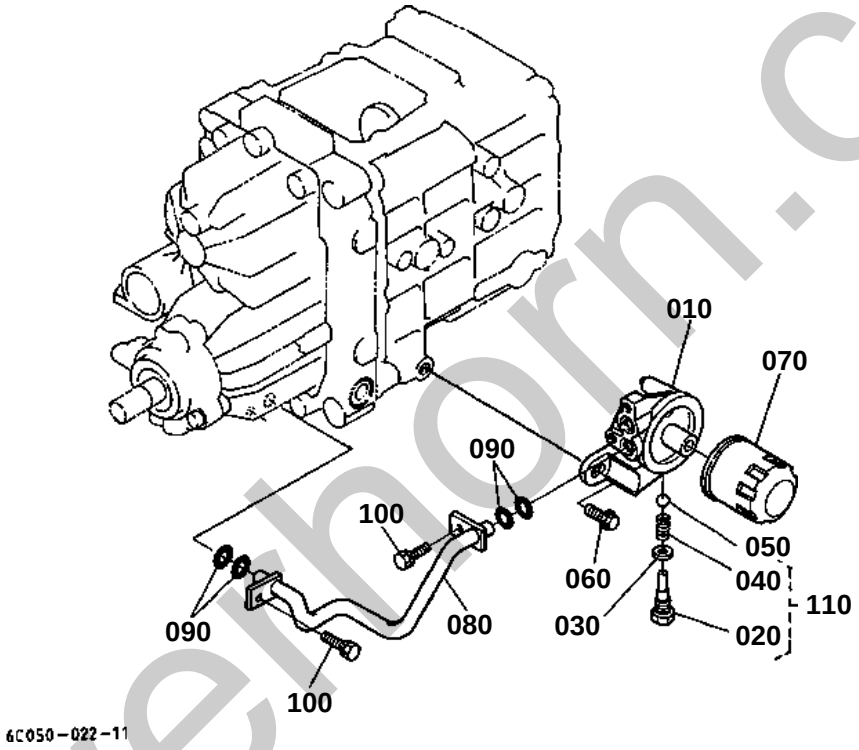

silverthorn.co.uk

HYDRAULIC OIL LINE (HST)

↔ Interchangeable; ≠ not interchangeable; ← new for old; → old for new

REF.No	Part No.	Description	Q'ty	S.No.	I/C	REMARKS	Weight (kgf)	Weight (lb)
010	6C050-39332	BRACKET FILTER	1				0	0
020	6C050-39382	BOLT	1				0.03	0.066
030	04717-01200	WASHER WITH RUBBER	1				0.002	0.0044
040	16851-36950	SPRING	1				0.02	0.044
050	07715-01605	BALL	1				0.003	0.0066
060	01125-51030	BOLT	1				0.03	0.066
070	66021-36060	CARTRIDGE OIL FILTER	1				0.34	0.748
080	6C050-39343	PIPE HST	1				0.085	0.187
090	04811-00120	O RING	4				0.001	0.0022
100	01123-60816	BOLT	2				0.01	0.022
110	6C050-96990	KIT BOLT-SPRING	1				0.034	0.0748

silverhorn.co.uk

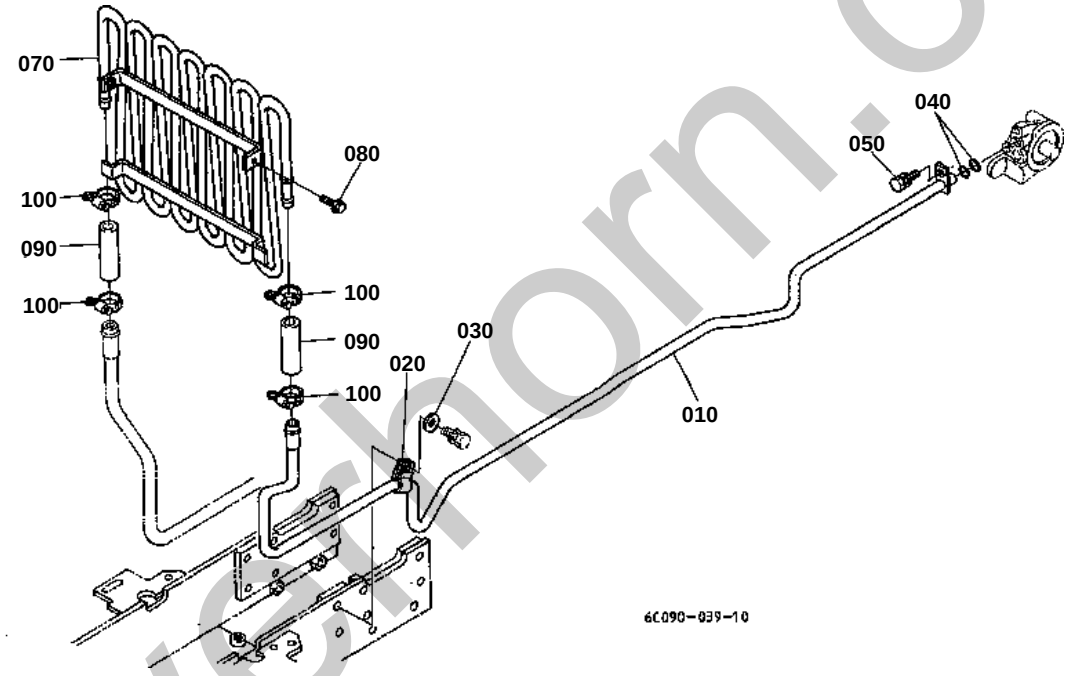

silverhorn.co.uk

OIL COOLER

↔ Interchangeable; ≠ not interchangeable; ← new for old; → old for new

REF.No	Part No.	Description	Q'ty	S.No.	I/C	REMARKS	Weight (kgf)	Weight (lb)
010	6C090-39320	PIPE RETURN	1				0.55	1.21
020	6C050-39410	CLAMP PIPE	1				0.013	0.0286
030	04013-60100	WASHER PLAIN	1				0.004	0.0088
040	04811-00120	O RING	2				0.001	0.0022
050	01123-60816	BOLT	1				0.01	0.022
070	6C090-58710	PIPE COOLER	1				1.6	3.52
080	01125-60816	BOLT	2				0.01	0.022
090	6C050-58720	HOSE	2				0.023	0.0506
100	6C050-58750	CLAMP HOSE	4				0.02	0.044

silverhorn.co.uk

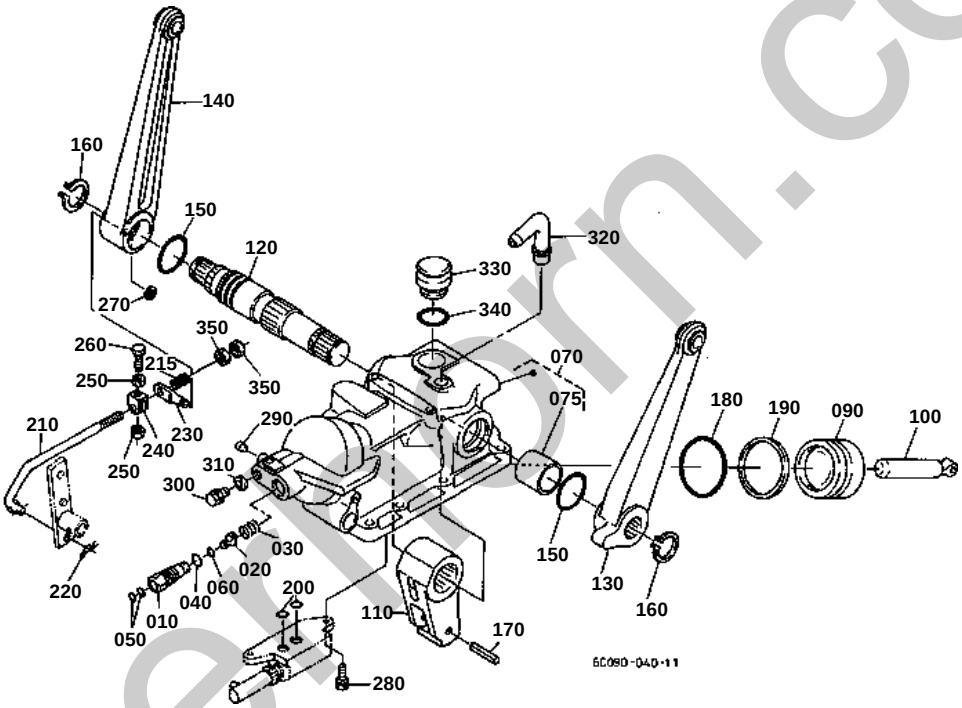

silverthorn.co.uk

210 6C090-3623-0

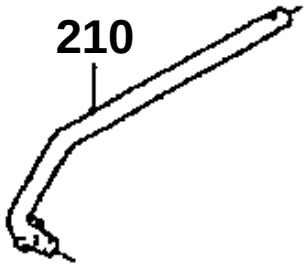

220 05525-50800
240 66611-3632-0
250 02112-50080
260 01153-50822

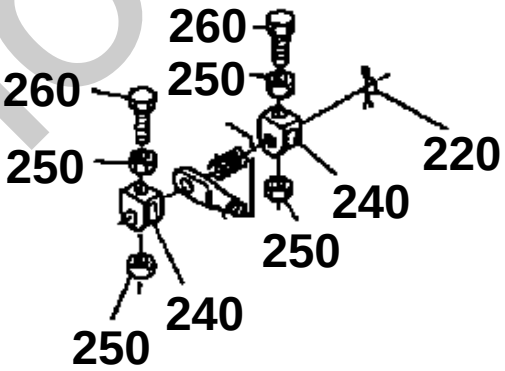

6C090-802-10

silverhorn.co.uk

HYDRAULIC CYLINDER CASE

↔ Interchangeable; ≠ not interchangeable; ← new for old; → old for new

REF.No	Part No.	Description	Q'ty	S.No.	I/C	REMARKS	Weight (kgf)	Weight (lb)
010	6C040-37210	BODY	1				0.077	0.1694
020	6C040-37250	POPPET	1				0.006	0.0132
030	6C040-37430	SPRING	1				0.002	0.0044
040	04811-00180	O RING	1				0.001	0.0022
050	04810-00080	O RING	2				0.001	0.0022
060	04811-06120	O RING	1				0.001	0.0022
070	6C090-36030	ASSY CYLINDER HYD	1				12.5	27.5
075	6C040-36490	BUSH	1				0.05	0.11
090	6C040-36410	PISTON HYD.	1				0.78	1.716
100	6C090-36430	ROD HYD.PISTON	1				0.38	0.836
110	6C040-36450	ARM HYDRAULIC	1				0.99	2.178
120	6C090-36470	SHAFT HYD.ARM	1				1.67	3.674
130	6C040-36510	ARM LIFT LH	1				1.88	4.136
140	6C040-36524	ARM LIFT RH	1				1.86	4.092
150	6C040-36550	O RING	2				0.003	0.0066
160	04612-00320	CIRCLIP EXTERNAL	2				0.004	0.0088
170	05411-00640	PIN SPRING	1				0.006	0.0132
180	04811-00600	O RING	1				0.006	0.0132
190	67111-36720	RING BACK UP	1				0.005	0.011
200	04811-00080	O RING	2	<=15353			0.001	0.0022
200	04810-00100	O RING	2	>=15354	≠		0.001	0.0022
210	6C090-36230	ROD FEEDBACK	1	<=11645			0.09	0.198
210	6C090-36232	ROD FEEDBACK	1	>=11646	≠		0.08	0.176
215	68001-63250	SPRING	1				0.005	0.011
220	05525-50800	PIN SNAP	2	<=11645			0.001	0.0022
220	05525-50800	PIN SNAP	1	>=11646			0.001	0.0022
230	6C090-36220	PIN FEEDBACK	1				0.03	0.066
240	66611-36320	INTERLOCKER	2	<=11645			0.022	0.0484
240	66611-36320	INTERLOCKER	1	>=11646			0.022	0.0484
250	02112-50080	NUT	4	<=11645			0.003	0.0066
250	02112-50080	NUT	2	>=11646			0.003	0.0066
260	01153-50822	BOLT	2	<=11645			0.011	0.0242
260	01153-50822	BOLT	1	>=11646			0.011	0.0242
270	04613-50080	CIRCLIP EXTERNAL	1				0.001	0.0022
280	01123-50822	BOLT	2				0.012	0.0264
290	32701-36150	PLUG	1				0.005	0.011
300	37150-36730	PLUG	1				0.03	0.066
310	37150-36720	GASKET	1				0.01	0.022
320	6C040-36070	PIPE BREATHER	1				0.018	0.0396
330	6C040-36110	PLUG OIL FILLER	1				0.02	0.044
340	04811-00240	O RING	1				0.001	0.0022
350	6C090-36460	NUT	2	>=11646			0.006	0.0132

silverhorn.co.uk

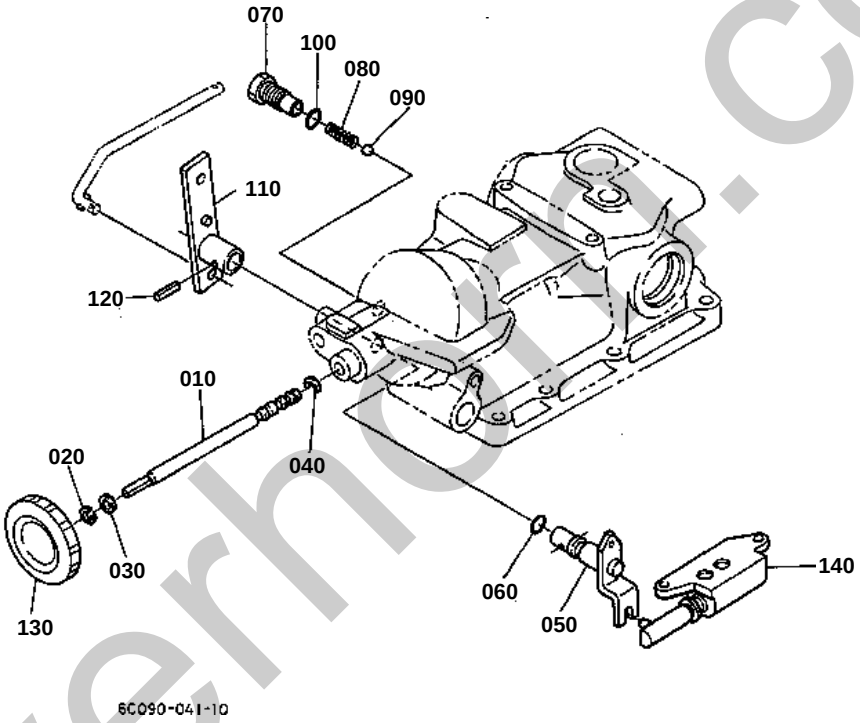

silverhorn.co.uk

↔ Interchangeable; ≠ not interchangeable; ← new for old; → old for new

REF.No	Part No.	Description	Q'ty	S.No.	I/C	REMARKS	Weight (kgf)	Weight (lb)
010	6C040-37220	SHAFT HYD.ADJUST	1				0.11	0.242
020	04611-00170	CIR CLIP INTERNAL	1				0.001	0.0022
030	6C040-37420	COLLAR	1				0.001	0.0022
040	6C040-37410	STOPPER	1				0.002	0.0044
050	6C090-36932	SHAFT CONTROL LEVER	1				0.1	0.22
060	04811-00110	O RING	1				0.001	0.0022
070	6C090-36060	PLUG	1				0.045	0.099
080	K3511-36080	SPRING	1				0.005	0.011
090	07715-01605	BALL	1				0.003	0.0066
100	04811-00140	O RING	1				0.001	0.0022
110	6C090-36270	ARM CONTROL LEVER	1				0.14	0.308
120	05411-00520	PIN SPRING	1				0.002	0.0044
130	37410-36643	GRIP	1				0.03	0.066
140	6C090-36200	ASSY VALVE CONTROL	1	<=15353		REFER TO L.NO.E04-L FOR COMPONENTS.	0	0
140	6C090-36202	ASSY VALVE CONTROL	1	>=15354	←	REFER TO L.NO.E04-L FOR COMPONENTS.	0.61	1.342
140	6C095-36200	ASSY VALVE CONTROL	1	>=17618	←	REFER TO L.NO.E04-L FOR COMPONENTS.	0.61	1.342

silverhorn.co.uk

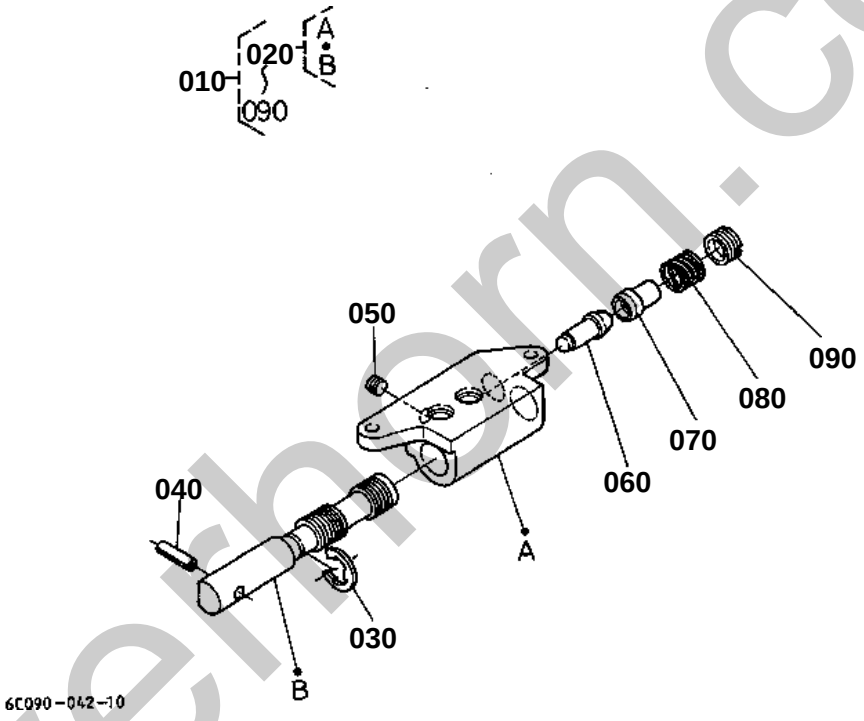

silverhorn.co.uk

↔ Interchangeable; ≠ not interchangeable; ← new for old; → old for new

REF.No	Part No.	Description	Q'ty	S.No.	I/C	REMARKS	Weight (kgf)	Weight (lb)
010	6C090-36200	ASSY VALVE CONTROL	1	<=15353			0	0
010	6C090-36202	ASSY VALVE CONTROL	1	>=15354	←		0.61	1.342
010	6C095-36200	ASSY VALVE CONTROL	1	>=17618	←		0.61	1.342
020	6C090-36600	ASSY BODY-SPOOL	1	<=15353			0.57	1.254
020	6C090-36602	ASSY BODY-SPOOL	1	>=15354	←		0.57	1.254
020	6C095-36600	ASSY BODY-SPOOL	1	>=17618	←		0.59	1.298
030	04613-50090	CIRCLIP EXTERNAL	1				0.001	0.0022
040	05411-00620	PIN SPRING	1				0.002	0.0044
050	6C090-36640	PLUG SCREW	1				0.001	0.0022
060	6C090-36660	SEAT RELIEF	1				0.005	0.011
070	6C090-36670	POPPET	1				0.005	0.011
080	6C090-36680	SPRING	1				0.004	0.0088
090	6C090-36690	PLUG	1				0.005	0.011

silverhorn.co.uk

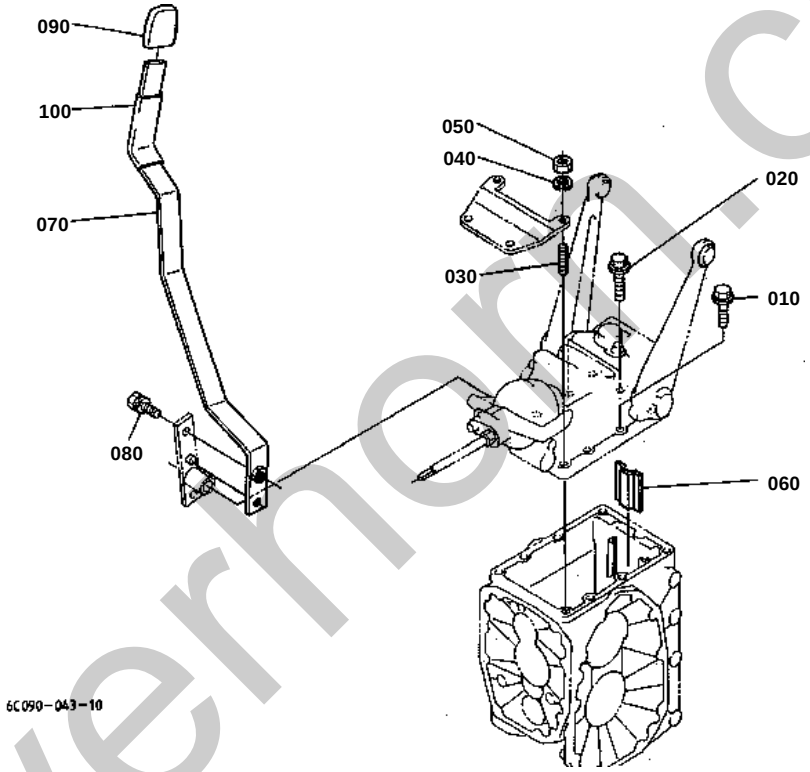

silverhorn.co.uk

HYDRAULIC CONTROL LEVER

↔ Interchangeable; ≠ not interchangeable; ← new for old; → old for new

REF.No	Part No.	Description	Q'ty	S.No.	I/C	REMARKS	Weight (kgf)	Weight (lb)
010	01123-51035	BOLT	5				0.025	0.055
020	01123-51045	BOLT	2				0.032	0.0704
030	01555-51035	STUD	2				0.029	0.0638
040	04512-60100	WASHER SPRING	2				0.002	0.0044
050	02118-50100	NUT	2				0.005	0.011
060	6C040-36750	STOPPER	1				0.188	0.4136
070	6C090-36280	LEVER HYD CONTROL	1				0.506	1.1132
080	01123-50820	BOLT	1				0.011	0.0242
090	31395-36880	GRIP LEVER	1				0.04	0.088
100	6A100-18560	CUSHION	1				0.005	0.011

silverhorn.co.uk

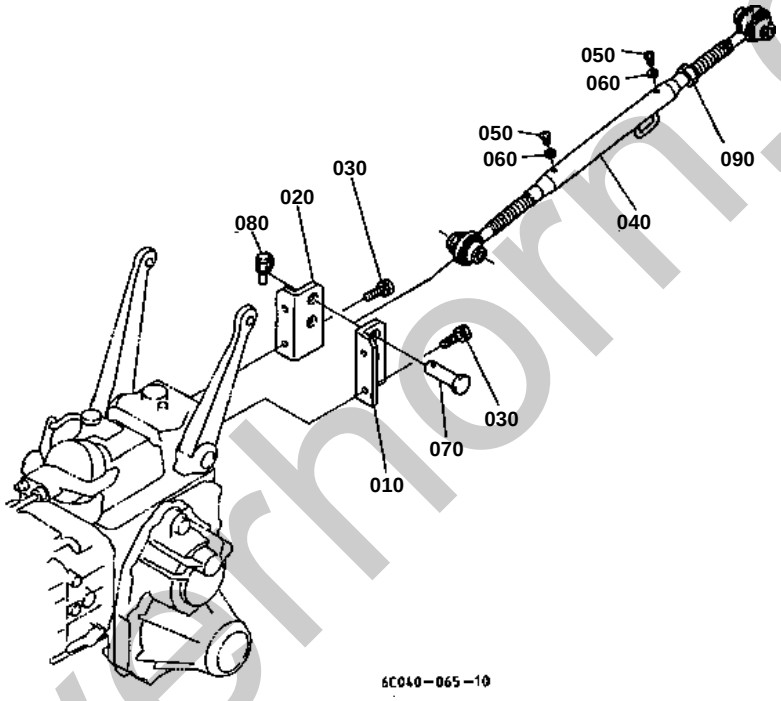

silverhorn.co.uk

TOP LINK

↔ Interchangeable; ≠ not interchangeable; ← new for old; → old for new

REF.No	Part No.	Description	Q'ty	S.No.	I/C	REMARKS	Weight (kgf)	Weight (lb)
010	6C040-65190	BRACKET TOP LINK	1				0.65	1.43
020	6C040-65160	BRACKET TOP LINK RH	1				0.65	1.43
030	01123-51230	BOLT	4				0.04	0.088
040	6C040-65400	ASSY LINK TOP	1				2.16	4.752
050	03014-50608	SCREW PAN-HEAD	2				0.002	0.0044
060	04512-60060	WASHER SPRING	2				0.001	0.0022
070	31150-71360	PIN JOINT	2				0.166	0.3652
080	34150-37640	PIN SET	2				0.06	0.132
090	6C040-65420	ROD TOP LINK LH	1				0	0

silverhorn.co.uk

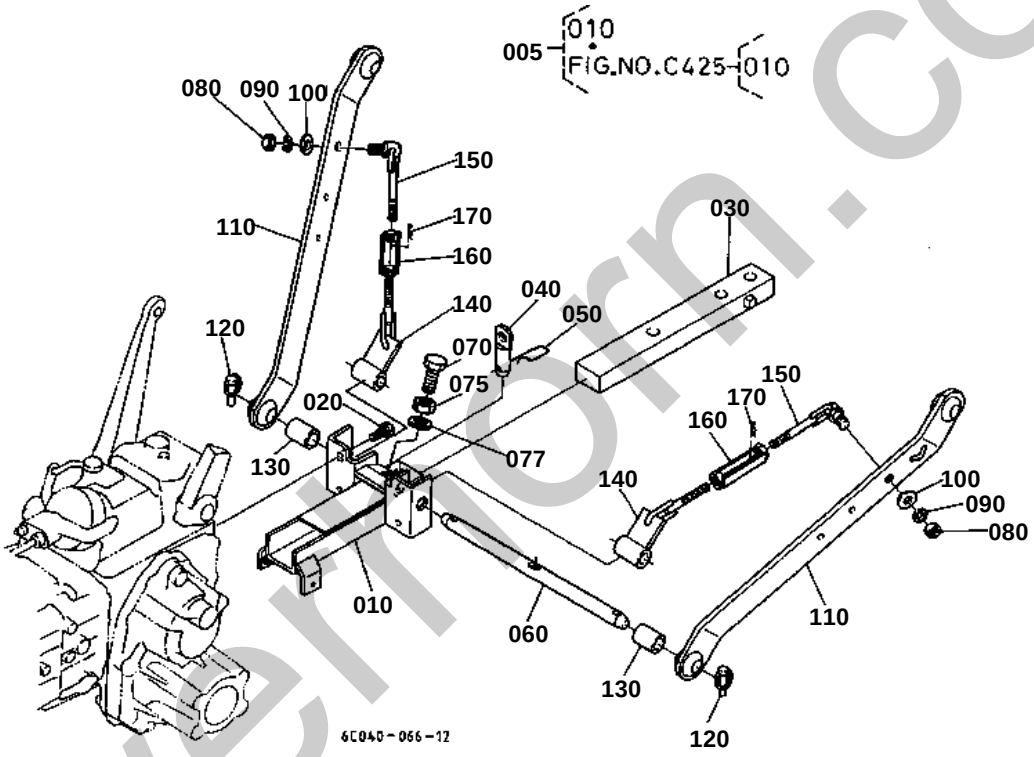

silvermorn.co.uk

LOWER LINK

↔ Interchangeable; ≠ not interchangeable; ← new for old; → old for new

REF.No	Part No.	Description	Q'ty	S.No.	I/C	REMARKS	Weight (kgf)	Weight (lb)
005	6C040-96980	SET CASE DIFF.GEAR	1			SERVICE PARTS	11.34	24.948
010	6C040-65604	COMP.HITCH	1				3.35	7.37
020	01123-51230	BOLT	4				0.04	0.088
030	6C040-67110	DRAWBAR	1			OPTION	4.5	9.9
040	6C040-65610	PIN HITCH	1				0.18	0.396
050	31150-29730	PIN SPRING	1				0.044	0.0968
060	6C040-66010	PIN LOWER LINK	1				1.14	2.508
070	6C040-65120	BOLT	1				0.02	0.044
075	02118-50100	NUT	1				0.005	0.011
077	04512-60100	WASHER SPRING	1				0.002	0.0044
080	02174-50160	NUT	2				0.022	0.0484
090	04512-60160	WASHER SPRING	2				0.01	0.022
100	04015-50160	WASHER PLAIN	2				0	0
110	6C040-65210	COMP.LINK LOWER	2				5.24	11.528
120	34150-37640	PIN SET	4				0.06	0.132
130	66204-65350	SPACER	2				0.12	0.264
140	6C040-65290	BRACKET CHECK CHAIN	2				0.52	1.144
150	6C040-65320	BOLT TURNBUCKLE	2				0.34	0.748
160	6C040-65390	TURNBUCKLE	2				0.2	0.44
170	05515-61200	PIN SNAP	2				0.005	0.011

silverhorn.co.uk

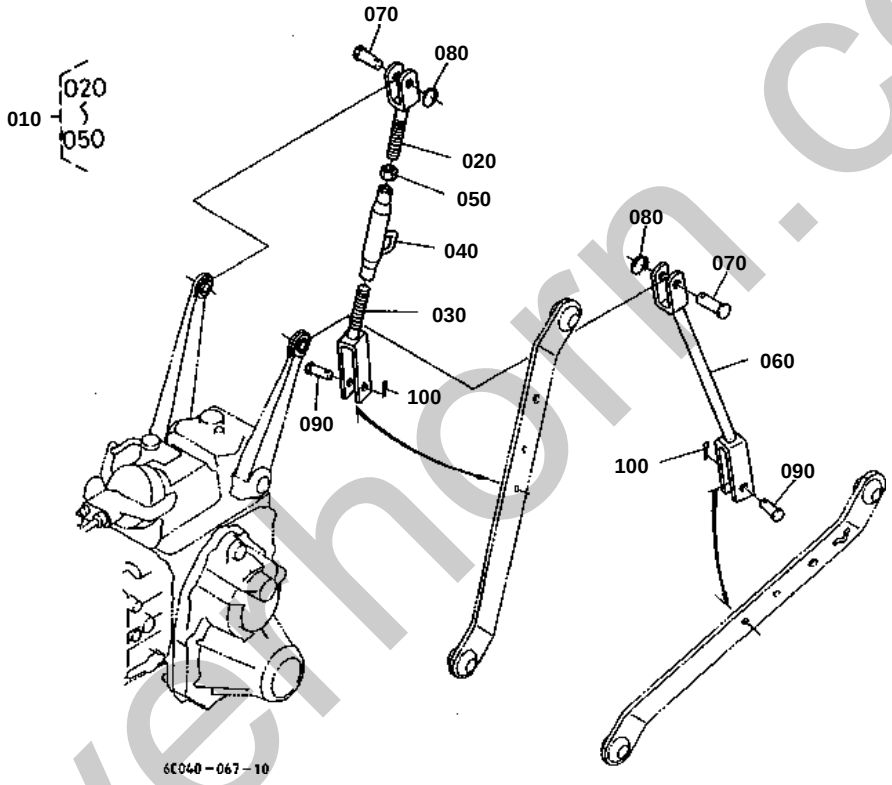

silverhorn.co.uk

LIFT ROD

↔ Interchangeable; ≠ not interchangeable; ← new for old; → old for new

REF.No	Part No.	Description	Q'ty	S.No.	I/C	REMARKS	Weight (kgf)	Weight (lb)
010	6C040-65200	ASSY ROD LIFT RH	1				0	0
020	6C040-65230	ROD LIFT RH	1				0.36	0.792
030	6C040-65240	ROD LIFT RH	1				0.5	1.1
040	6C040-65250	ROD LIFT MIDDLE	1				0	0
050	02172-50180	NUT	1				0.021	0.0462
060	6C040-65270	ROD LIFT LH	1				1.07	2.354
070	05122-51650	PIN JOINT	2				0.09	0.198
080	76550-42190	RING SNAP	2	<=12470			0.004	0.0088
080	67156-34340	RING SNAP	2	>=12471	←		0.01	0.022
090	05122-51240	PIN JOINT	2				0.039	0.0858
100	05511-50425	PIN SPLIT	2				0.003	0.0066

silverhorn.co.uk

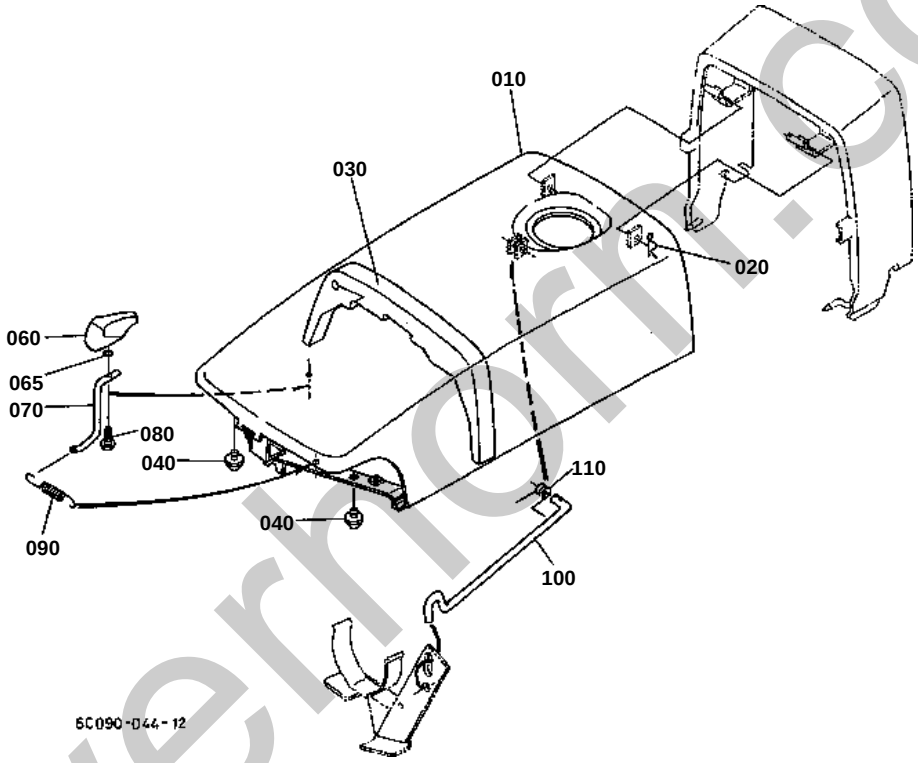

silvermoor.co.uk

HOOD (BONNET)

↔ Interchangeable; ≠ not interchangeable; ← new for old; → old for new

REF.No	Part No.	Description	Q'ty	S.No.	I/C	REMARKS	Weight (kgf)	Weight (lb)
010	6C090-54100	COMP.BONNET	1				4.22	9.284
020	05525-50800	PIN SNAP	1				0.001	0.0022
030	6C090-54460	CUSHION	1	<=12470			0	0
030	6A320-54460	CUSHION	1	>=12471	↔		0	0
030	6A320-54462	CUSHION	1	>=13631	←		0.06	0.132
040	6C090-54160	CUSHION	2	<=14062			0	0
040	6C090-54162	CUSHION	2	>=14063	←		0.013	0.0286
060	6C040-54260	HANDLE MASCOT	1				0.028	0.0616
065	04811-00080	O RING	1	>=14990			0.001	0.0022
070	6C090-54270	LEVER HANDLE	1				0.09	0.198
080	03614-50416	SCREW TAPPING	1				0.002	0.0044
090	6C040-54150	SPRING	1				0.006	0.0132
100	6C090-54250	ROD BONNET	1	<=14989			0	0
100	6C090-54253	ROD BONNET	1	>=14990	←		0.12	0.264
110	6C090-54510	SPRING	1				0.007	0.0154

silverhorn.co.uk

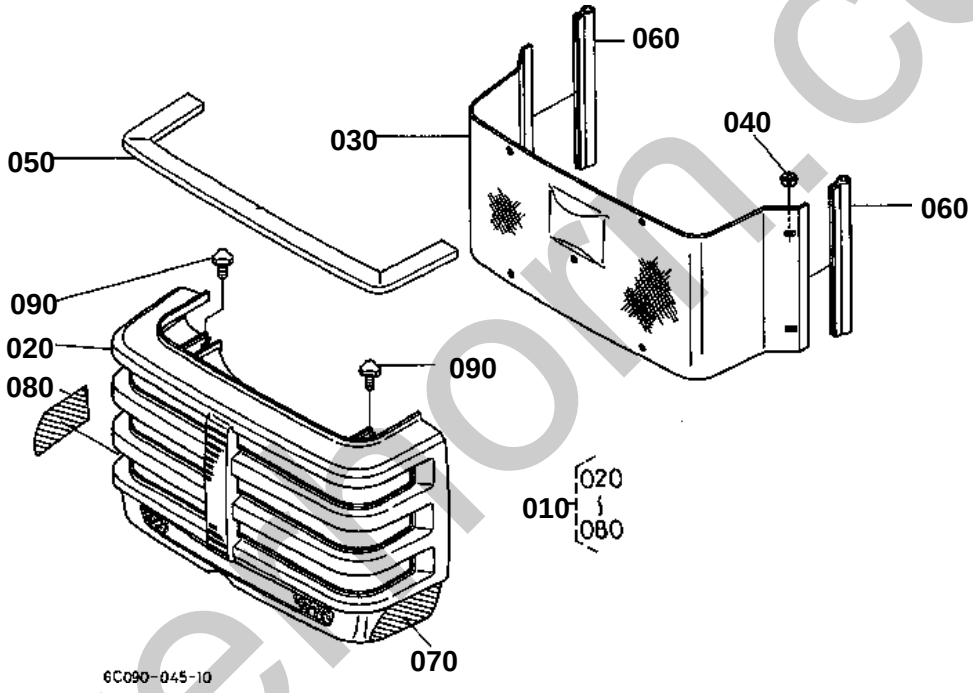

silverthorn.co.uk

FRONT GRILLE

↔ Interchangeable; ≠ not interchangeable; ← new for old; → old for new

REF.No	Part No.	Description	Q'ty	S.No.	I/C	REMARKS	Weight (kgf)	Weight (lb)
010	6C090-54400	COMP.COVER FRONT	1				1.8	3.96
020	6C090-54410	COVER FRONT	1				0.6	1.32
030	6C090-54430	NET	1				0.23	0.506
040	6C040-54540	NUT	9				0.001	0.0022
050	6C090-54140	SPONGE	1				0.02	0.044
060	6C090-51510	SEAL RUBBER	2				0.03	0.066
070	6C090-47350	MARK	1				0.002	0.0044
080	6C090-47360	MARK	1				0.002	0.0044
090	37410-52610	SCREW KNOB	2				0.015	0.033

silverhorn.co.uk

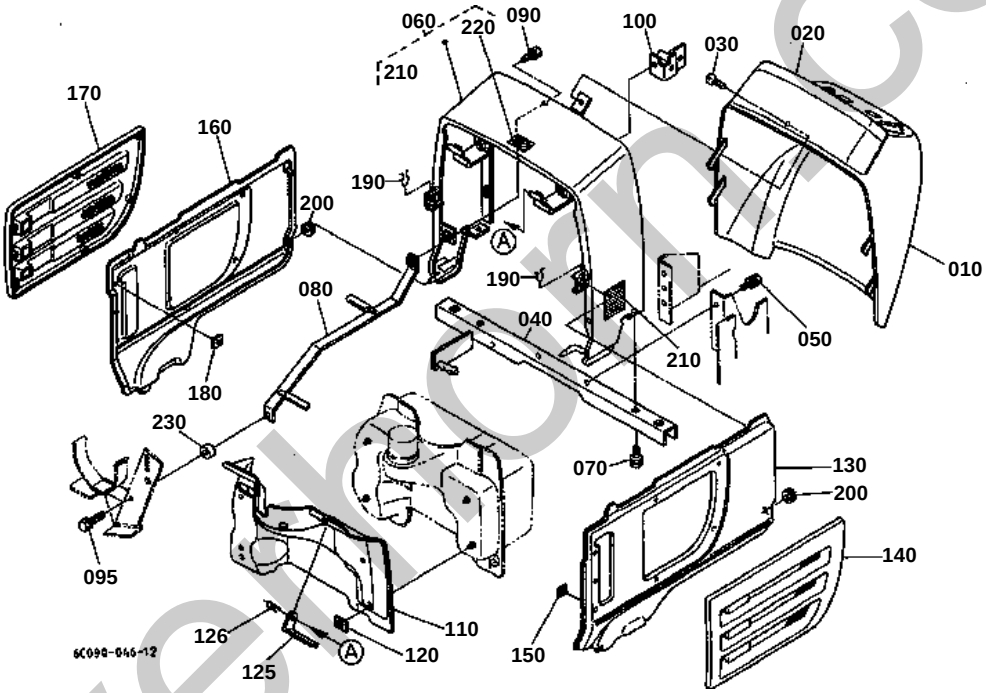

silverthorn.co.uk

110 6C090-5455-0

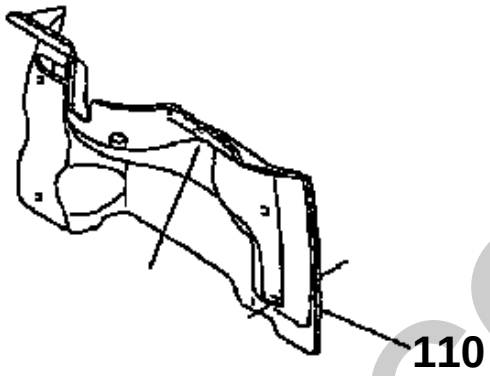

6C090-803-10

silverhorn.co.uk

SIDE COVER

↔ Interchangeable; ≠ not interchangeable; ← new for old; → old for new

REF.No	Part No.	Description	Q'ty	S.No.	I/C	REMARKS	Weight (kgf)	Weight (lb)
010	6C090-53510	COVER PANEL	1				4	8.8
020	6C040-53522	COVER FRAME	1				0.14	0.308
030	37410-61720	SCREW	1				0.001	0.0022
040	6C090-54210	PILLAR CENTER	1	<=16202			1.55	3.41
040	6C090-54213	PILLAR CENTER	1	>=16203	←		1.6	3.52
050	01133-51022	BOLT	2				0.025	0.055
060	6C090-54200	KIT PILLAR CENTER	1				6	13.2
070	6C040-54610	BOLT	2				0.014	0.0308
080	6C090-54230	STAY PILLAR	1				0.355	0.781
090	01023-50616	BOLT	1				0.005	0.011
095	01023-50625	BOLT	1				0.007	0.0154
100	6C040-54283	BRACKET	1				0.09	0.198
110	6C090-54550	COVER HEAT PROOF	1	<=12526			0	0
110	6C090-54554	COVER HEAT PROOF	1	>=12527	←		0.21	0.462
120	52300-26210	NUT	4				0.002	0.0044
125	6C090-54570	PLATE	1				0.072	0.1584
126	05525-50800	PIN SNAP	1				0.001	0.0022
130	6C090-54320	COMP.COVER SIDE	1				1	2.2
140	6C040-54333	COVER	1				0.24	0.528
150	55611-44190	NUT	7				0.004	0.0088
160	6C090-54350	COMP.COVER SIDE	1				0	0
170	6C040-54383	COVER	1				0.24	0.528
180	55611-44190	NUT	7				0.004	0.0088
190	6C040-54364	SPRING	4				0.004	0.0088
200	66591-54580	RUBBER RELEASE ROD	2				0.003	0.0066
210	6C090-49650	LABEL START CAUTION	1			ENGLISH	0.005	0.011
210	6C091-49650	LABEL START CAUTION	1			FRENCH	0.01	0.022
220	6C040-47412	LABEL FILLER CAUTION	1				0.001	0.0022
230	37300-33450	COLLAR	1				0.005	0.011

silverhorn.co.uk

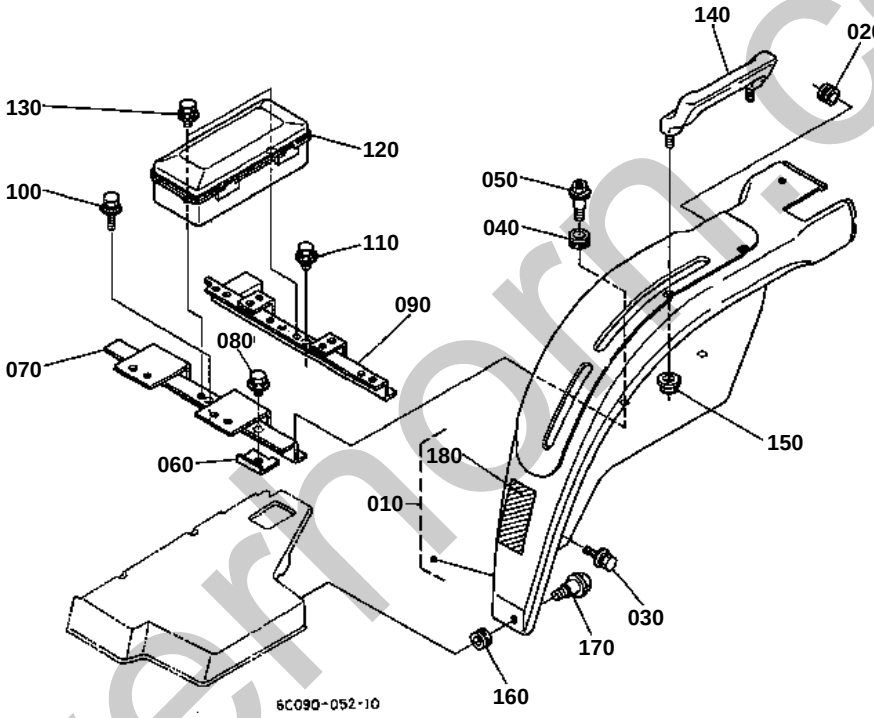

silvermarn.co.uk

FENDER LH

↔ Interchangeable; ≠ not interchangeable; ← new for old; → old for new

REF.No	Part No.	Description	Q'ty	S.No.	I/C	REMARKS	Weight (kgf)	Weight (lb)
010	6C090-99130	KIT FENDER LH (A)	1				7	15.4
020	32150-29180	CAP RUBBER	1				0.002	0.0044
030	01125-60816	BOLT	2				0.01	0.022
040	6C040-51380	CUSHION	2	<=12470			0	0
040	6A100-51380	CUSHION	2	>=12471	↔		0.003	0.0066
050	6C040-51342	BOLT	2				0.017	0.0374
060	6C090-52882	PLATE	1				0.05	0.11
070	6C040-52734	STAY FENDER	1				1.07	2.354
080	01125-60816	BOLT	1				0.01	0.022
090	6C040-52746	STAY FENDER	1				0.45	0.99
100	01125-60816	BOLT	1				0.01	0.022
110	01125-51020	BOLT	2				0.005	0.011
120	6C040-52790	CASE TOOLS	1				0.23	0.506
130	01025-50616	BOLT	2				0.005	0.011
140	6C040-52170	HANDRAIL	1				0.24	0.528
150	02131-50100	NUT	2				0.01	0.022
160	6C040-51380	CUSHION	1	<=12470			0	0
160	6A100-51380	CUSHION	1	>=12471	↔		0.003	0.0066
170	6C040-51342	BOLT	1				0.017	0.0374
180	6C040-47420	LABEL SAFETY	1				0.001	0.0022

silverhorn.co.uk

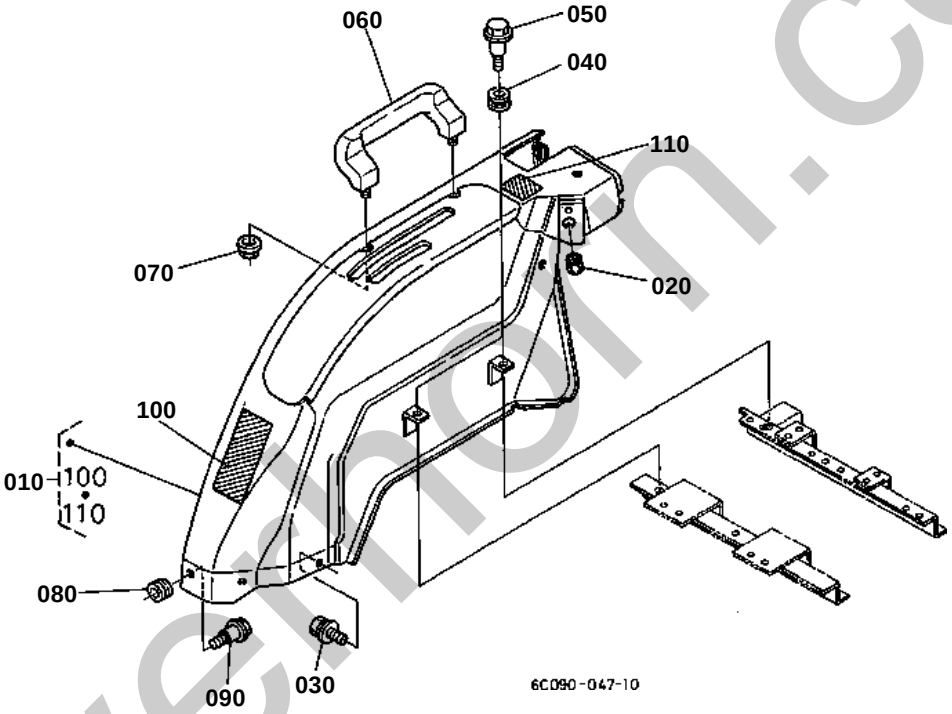

silvermorn.co.uk

FENDER RH

↔ Interchangeable; ≠ not interchangeable; ← new for old; → old for new

REF.No	Part No.	Description	Q'ty	S.No.	I/C	REMARKS	Weight (kgf)	Weight (lb)
010	6C090-99140	KIT FENDER RH(A)	1				6.5	14.3
020	32150-29180	CAP RUBBER	1				0.002	0.0044
030	01125-60816	BOLT	2				0.01	0.022
040	6C040-51380	CUSHION	2	<=12470			0	0
040	6A100-51380	CUSHION	2	>=12471	↔		0.003	0.0066
050	6C040-51342	BOLT	2				0.017	0.0374
060	6C040-52170	HANDRAIL	1				0.24	0.528
070	02131-50100	NUT	2				0.01	0.022
080	6C040-51380	CUSHION	1	<=12470			0	0
080	6A100-51380	CUSHION	1	>=12471	↔		0.003	0.0066
090	6C040-51342	BOLT	1				0.017	0.0374
100	TA040-49320	LABEL ROPS WARNING	1			ENGLISH	0.001	0.0022
100	TA040-49150	LABEL ROPS WARNING	1			FRENCH	0.003	0.0066
110	TA040-49350	LABEL DRAWBAR	1			ENGLISH	0.002	0.0044
110	TA041-49350	LABEL DRAWBAR	1			FRENCH	0.003	0.0066

silverhorn.co.uk

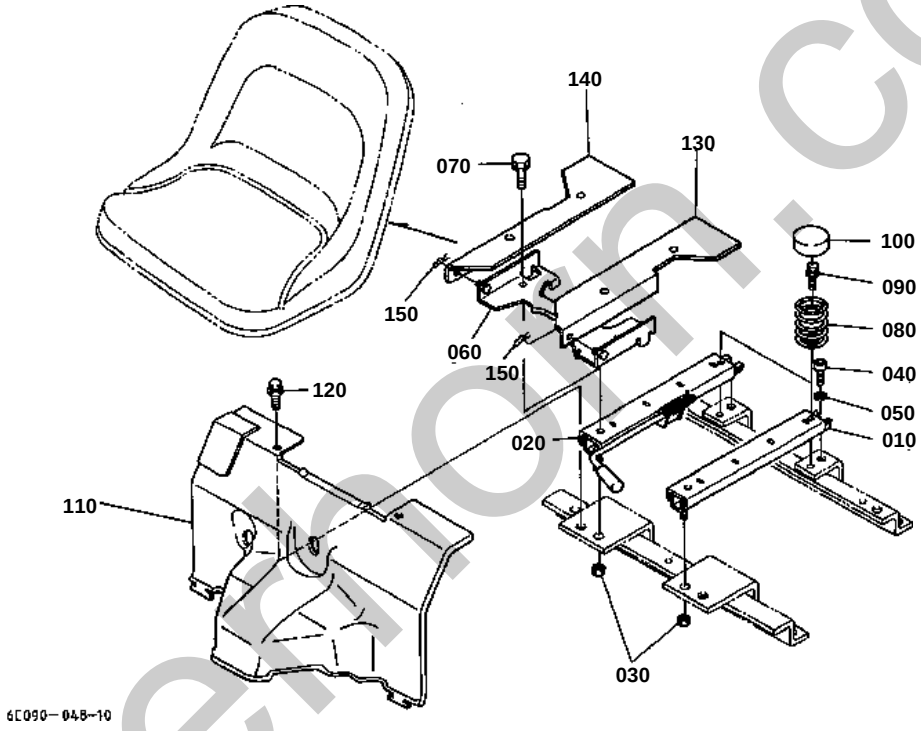

silvermoon.co.uk

SEAT STAY

↔ Interchangeable; ≠ not interchangeable; ← new for old; → old for new

REF.No	Part No.	Description	Q'ty	S.No.	I/C	REMARKS	Weight (kgf)	Weight (lb)
010	6C040-45910	ADJUSTER SEAT LH	1				0.73	1.606
020	6C040-45920	ADJUSTER SEAT RH	1				0.91	2.002
030	02131-50100	NUT	2				0.01	0.022
040	01311-10820	BOLT HEX-SOC-HD	2				0.012	0.0264
050	04512-60080	WASHER SPRING	2				0.002	0.0044
060	6C040-45954	STAY SEAT RAIL	1				0.55	1.21
070	01123-60816	BOLT	2				0.01	0.022
080	6C040-45990	SPRING SEAT	2				0.2	0.44
090	01127-50830	BOLT	2				0.023	0.0506
100	66301-52820	CAP SPRING	2				0.04	0.088
110	6C040-51370	COVER SEAT UNDER	1				0.38	0.836
120	01125-60820	BOLT	2				0.015	0.033
130	6C090-45960	STAY SEAT LH	1				0.87	1.914
140	6C090-45970	STAY SEAT RH	1				0.87	1.914
150	05525-50800	PIN SNAP	2				0.001	0.0022

silverhorn.co.uk

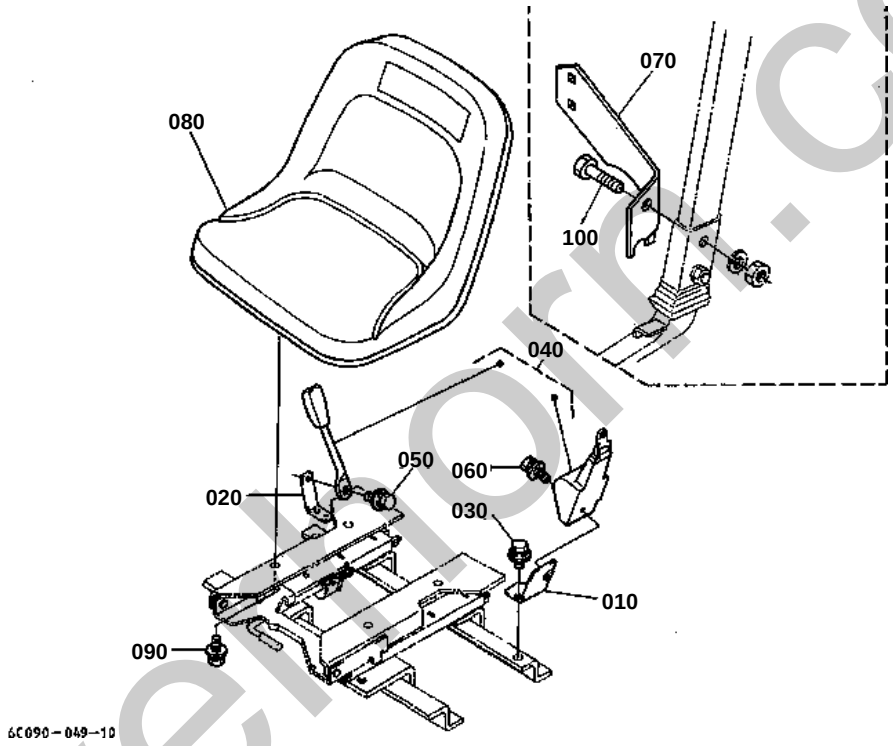

silvermorr.co.uk

SEAT

↔ Interchangeable; ≠ not interchangeable; ← new for old; → old for new

REF.No	Part No.	Description	Q'ty	S.No.	I/C	REMARKS	Weight (kgf)	Weight (lb)
010	6C040-52760	STAY SEAT BELT LH	1				0.3	0.66
020	6C040-52770	STAY SEAT BELT RH	1				0.1	0.22
030	01125-60816	BOLT	2				0.01	0.022
040	6C040-72252	ASSY BELT SEAT	1				0.2	0.44
050	01135-61020	BOLT	1				0.015	0.033
060	01135-61025	BOLT	1				0.04	0.088
070	6C090-54950	BRACKET SMV	1				0.65	1.43
080	K1122-56110	ASSY SEAT	1			OBTAINED LOCALLY	6.7	14.74
090	0Y171-50508	HEX.BOLT	4			OBTAINED LOCALLY	0	0
100	75599-04655	BOLT	1			OBTAINED LOCALLY	0	0

silverhorn.co.uk

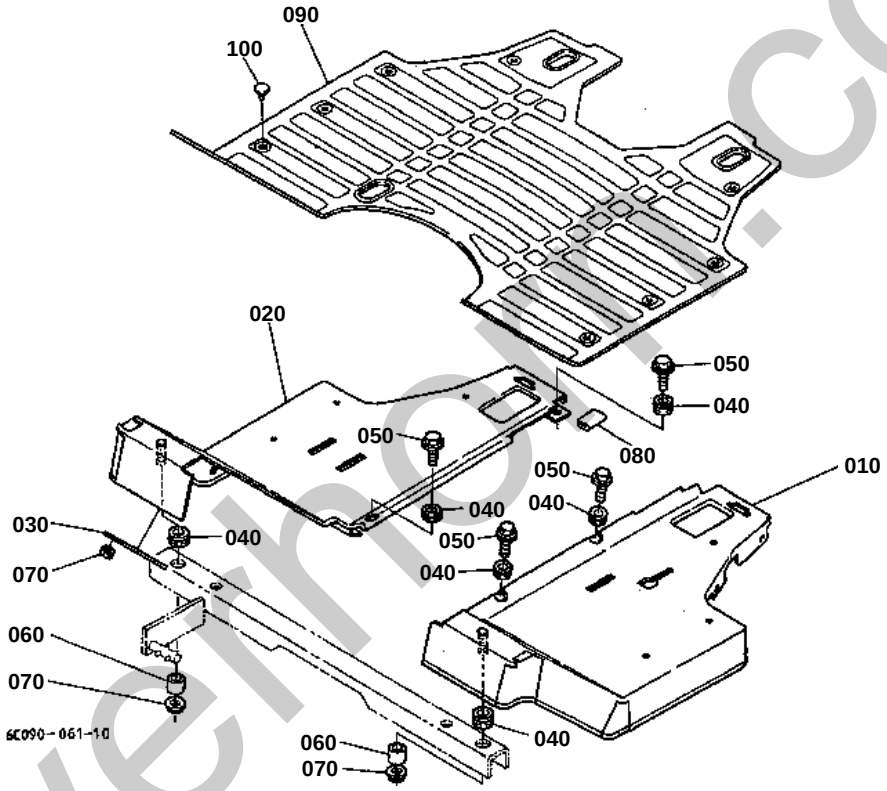

silverhoe.co.uk

STEP

↔ Interchangeable; ≠ not interchangeable; ← new for old; → old for new

REF.No	Part No.	Description	Q'ty	S.No.	I/C	REMARKS	Weight (kgf)	Weight (lb)
010	6C040-51318	STEP LH	1				3.4	7.48
020	6C040-51325	STEP RH	1				3.4	7.48
030	6C040-51330	SUPPORT STEP RH	1				0.073	0.1606
040	6C040-51380	CUSHION	6	<=12470			0	0
040	6A100-51380	CUSHION	6	>=12471	↔		0.003	0.0066
050	6C040-51342	BOLT	4				0.017	0.0374
060	6C040-51390	COLLAR	2				0.003	0.0066
070	02121-50080	NUT	4				0.01	0.022
080	6C040-51350	CUSHION	1				0.002	0.0044
090	6C040-51364	MAT STEP	1				2.08	4.576
100	67955-51340	STOPPER	12				0.001	0.0022

silverhorn.co.uk

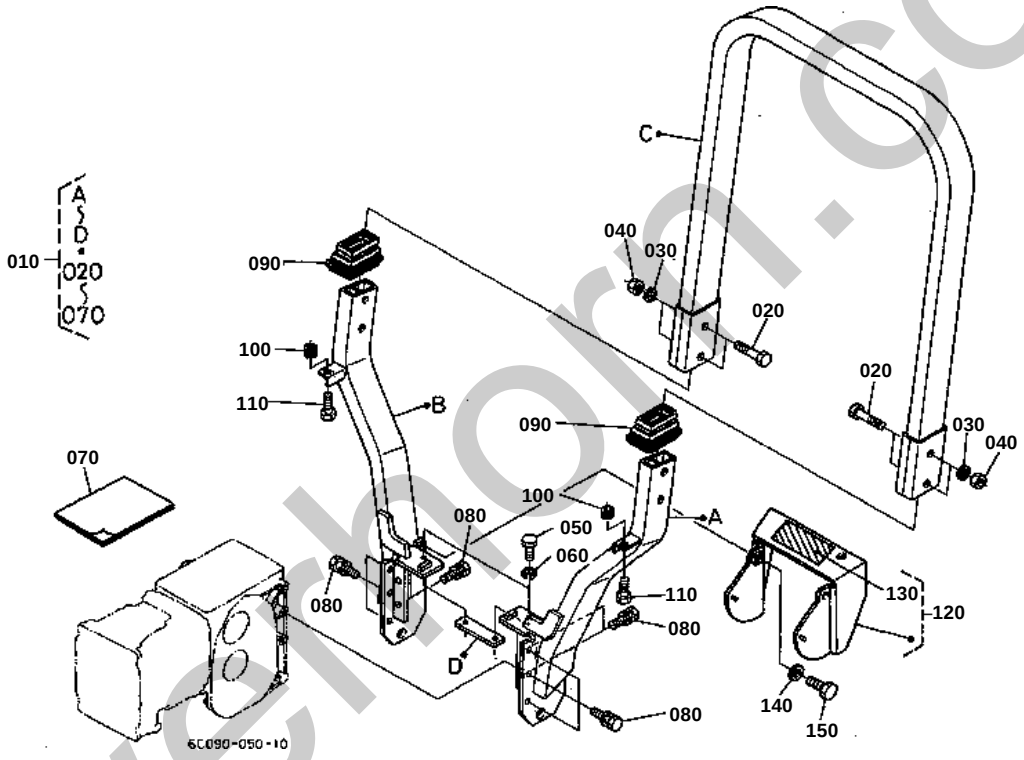

silverhorn.co.uk

↔ Interchangeable; ≠ not interchangeable; ← new for old; → old for new

REF.No	Part No.	Description	Q'ty	S.No.	I/C	REMARKS	Weight (kgf)	Weight (lb)
010	6C090-88100	ASSY ROPS	1				0	0
020	75599-04650	HEX.BOLT	4				0	0
030	75599-33016	WASHER SPRING	4				0.08	0.176
040	75599-31066	HEX.NUT	4				0	0
050	75599-04320	HEX.BOLT	2				0.02	0.044
060	75599-33013	WASHER SPRING	2				0	0
070	6C090-88450	MANUAL INSTRUCTION	1				0	0
080	01123-51235	BOLT	10				0.041	0.0902
090	6C040-72210	COVER ROPS	2				0.066	0.1452
100	6C040-51380	CUSHION	2	<=12470			0	0
100	6A100-51380	CUSHION	2	>=12471	↔		0.003	0.0066
110	6C040-51430	BOLT	2				0	0
120	6C040-72100	KIT COVER PTO(A)	1				1.4	3.08
130	TA040-49590	LABEL PTO WARNING	1			ENGLISH	0.002	0.0044
130	TA041-49590	LABEL PTO WARNING	1			FRENCH	0.005	0.011
140	04512-60080	WASHER SPRING	2				0.002	0.0044
150	01153-50820	BOLT	2				0.012	0.0264

silverhorn.co.uk

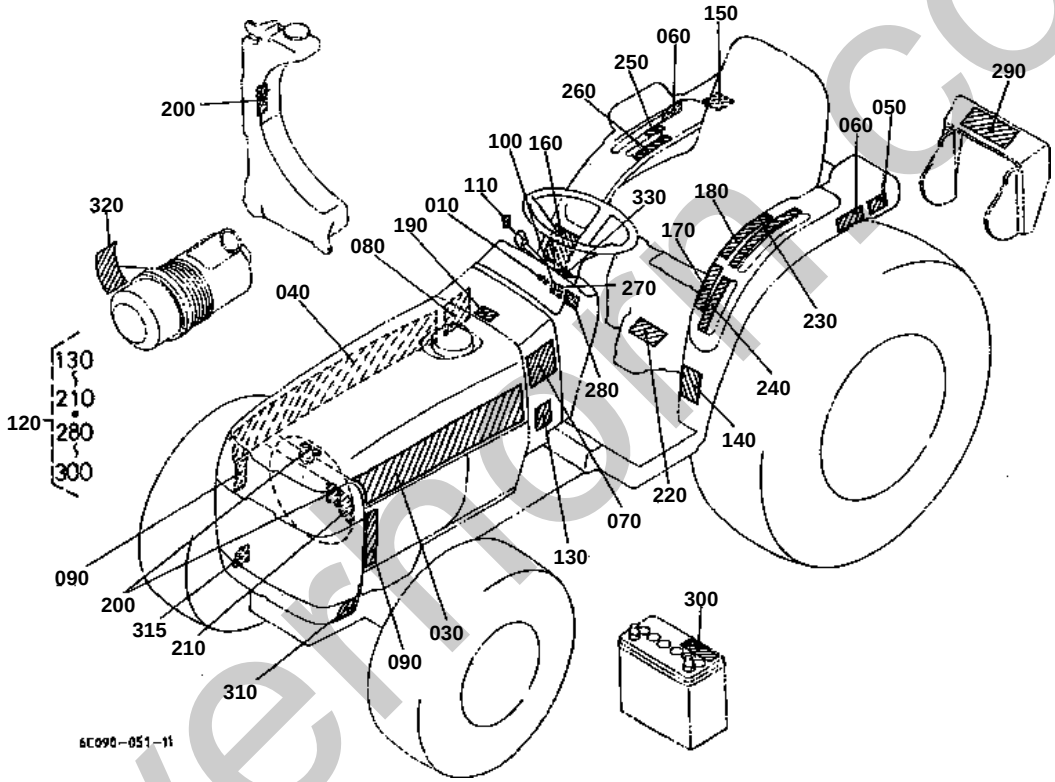

silvermoon.co.uk

↔ Interchangeable; ≠ not interchangeable; ← new for old; → old for new

REF.No	Part No.	Description	Q'ty	S.No.	I/C	REMARKS	Weight (kgf)	Weight (lb)
010	6C090-47210	MARK MAIN SWITCH	1				0.001	0.0022
030	6C090-47270	MARK MODEL LH	1				0.02	0.044
040	6C090-47280	MARK MODEL RH	1				0.02	0.044
050	6C040-47530	MARK 4WD	1				0.001	0.0022
060	6C050-47550	MARK HST	2				0.001	0.0022
070	6C090-47250	MARK PILLER LH	1				0.007	0.0154
080	6C090-47260	MARK PILLER RH	1				0.007	0.0154
090	6C090-47380	MARK SKIRT	2				0.001	0.0022
100	6C040-47510	LABEL PARKING	1				0.001	0.0022
110	TA040-49370	MARK ACCEL.GRIP	1				0.001	0.0022
120	6C090-47400	KIT LABEL SAFETY	1				0.04	0.088
130	6C090-49650	LABEL START CAUTION	1			ENGLISH	0.005	0.011
130	6C091-49650	LABEL START CAUTION	1			FRENCH	0.01	0.022
140	6C040-47420	LABEL SAFETY	1			ENGLISH	0.001	0.0022
140	TA041-65700	LABEL SAFETY	1			FRENCH	0.01	0.022
150	TA040-49350	LABEL DRAWBAR	1			ENGLISH	0.002	0.0044
150	TA041-49350	LABEL DRAWBAR	1			FRENCH	0.003	0.0066
160	TA040-49320	LABEL ROPS WARNING	1			ENGLISH	0.001	0.0022
160	TA040-49150	LABEL ROPS WARNING	1			FRENCH	0.003	0.0066
170	6C090-49390	LABEL PTO	1			ENGLISH	0.002	0.0044
170	6C091-49390	LABEL PTO	1			FRENCH	0.001	0.0022
180	6C090-49380	LABEL PTO	1			ENGLISH	0.002	0.0044
180	6C091-49380	LABEL PTO	1			FRENCH	0.001	0.0022
190	6C040-47412	LABEL FILLER CAUTION	1				0.001	0.0022
200	6C090-49580	LABEL FAN BELT	3				0.005	0.011
210	6C090-49590	LABEL MUFFLER	1				0.005	0.011
220	6C050-47480	LABEL PEDAL	1				0.002	0.0044
230	6C090-47322	LABEL PTO	1				0.003	0.0066
240	6C050-47332	LABEL RANGE SHIFT	1				0.001	0.0022
250	66426-47140	LABEL LIFT	1				0.002	0.0044
260	6C042-47400	LABEL 4WD	1				0.001	0.0022
270	6C050-47310	LABEL HST	1				0.001	0.0022
280	6C050-47242	LABEL SPEED SET	1			ENGLISH	0.001	0.0022
280	6C021-92140	LABEL SPEED SET	1	<=16485		FRENCH	0	0
280	6C021-92142	LABEL SPEED SET	1	>=16486	←	FRENCH	0.001	0.0022
290	TA040-49590	LABEL PTO WARNING	1			ENGLISH	0.002	0.0044
290	TA041-49590	LABEL PTO WARNING	1			FRENCH	0.005	0.011
300	6C040-55590	LABEL BATTERY	1			ENGLISH	0.001	0.0022
300	6C021-92120	LABEL BATTERY	1			FRENCH	0.001	0.0022
310	6C090-47350	MARK	1				0.002	0.0044
315	6C090-47360	MARK	1				0.002	0.0044
320	67980-82620	LABEL	1			ENGLISH	0.001	0.0022
320	6C021-92130	LABEL AIR CLEANER	1			FRENCH	0.001	0.0022
330	6C090-47220	LABEL	1	>=12107			0.001	0.0022

silvermorn.co.uk

↔ Interchangeable; ≠ not interchangeable; ← new for old; → old for new

REF.No	Part No.	Description	Q'ty	S.No.	I/C	REMARKS	Weight (kgf)	Weight (lb)
010	6C090-63110	MANUAL INSTRUCTION	1			ENGLISH	0.155	0.341
010	6C091-92050	MANUAL INSTRUCTION	1			FRENCH	0	0
020	6C040-62980	MANUAL ASSEMBLY	1	<=12106			0.022	0.0484
020	6C040-62984	MANUAL ASSEMBLY	1	>=12107	←		0	0
030	15241-86612	WRENCH FILTER	1				0.115	0.253
040	1G111-65720	FUSE	1			30A	0.009	0.0198
050	67401-62930	ASSY SPACER CLUTCH	1				0.03	0.066
060	67211-62940	PIECE DISTANCE	1				0.08	0.176
070	67401-62950	LABEL CLUTCH SPACER	1				0.002	0.0044
080	66416-62920	ASSY BAG SPARE FUSE	1				0.01	0.022
090	35820-75560	FUSE AUTO	2			15A	0.002	0.0044
100	6C040-55432	KEY STARTER	2				0.012	0.0264

silverhorn.co.uk