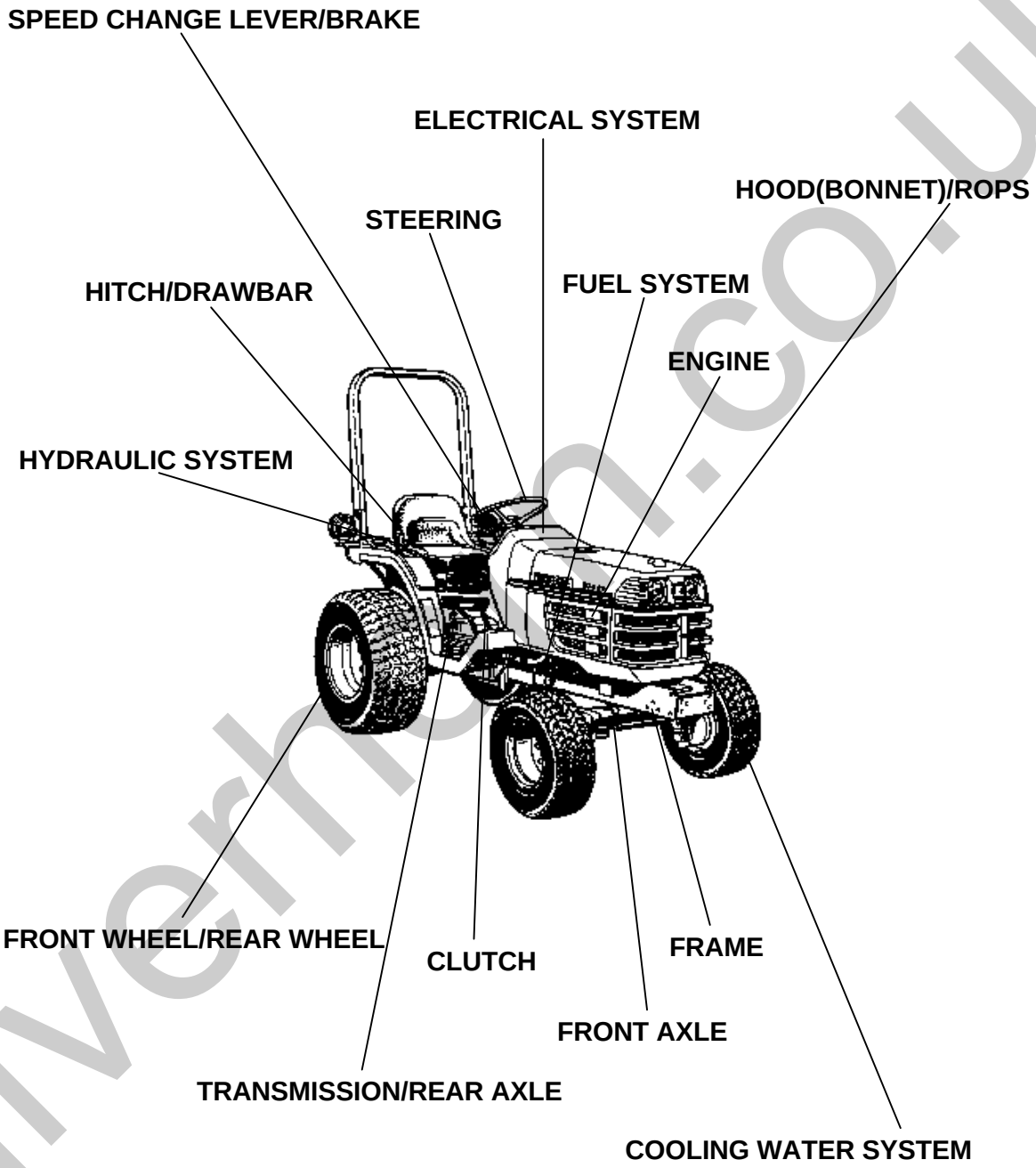

LABELS
ACCESSORIES
OPTION

silverhorn.co.uk

Item	Part No.	Description	Book
ENGINE	010001	CRANKCASE	100K0561
	010002	OIL PAN	100K0561
	010003	CYLINDER HEAD	100K0561
	010004	GEAR CASE	100K0561
	010005	HEAD COVER	100K0561
	010006	OIL FILTER	100K0561
	010007	DIPSTICK AND GUIDE	100K0561
	010008	OIL PUMP	100K0561
	010100	MAIN BEARING CASE	100K0561
	010101	CAMSHAFT AND IDLE GEAR SHAFT	100K0561
	010102	PISTON AND CRANKSHAFT	100K0561
	010103	FLYWHEEL	100K0561
	010104	CLUTCH	100K0561
	010105	FUEL CAMSHAFT AND GOVERNOR SHAFT	100K0561
	010200	ENGINE STOP LEVER	100K0561
	010202	INJECTION PUMP	100K0561
	010203	INJECTION PUMP [COMPONENT PARTS]	100K0561
	010204	GOVERNOR	100K0561
	010205	SPEED CONTROL PLATE	100K0561
	010206	NOZZLE HOLDER AND GLOW PLUG	100K0561
	010207	NOZZLE HOLDER [COMPONENT PARTS]	100K0561
	010301	FUEL PUMP(MECHANICAL)	100K0561
	010400	DYNAMO AND PULLEY	100K0561
	010401	DYNAMO [COMPONENT PARTS]	100K0561
	010500	WATER FLANGE AND THERMOSTAT	100K0561
	010501	WATER PUMP	100K0561
	010600	VALVE AND ROCKER ARM	100K0561
	010601	INLET MANIFOLD	100K0561
	010602	EXHAUST MANIFOLD	100K0561
	010700	HYDRAULIC PUMP	100K0561
	010701	HYDRAULIC PUMP [COMPONENT PARTS]	100K0561
	010900	UPPER GASKET KIT	100K0561
	010901	LOWER GASKET KIT	100K0561
	010908	PISTON KIT [OPTION]	100K0561
	010603	AIR CLEANER	100K0561
	010605	MUFFLER	100K0561
	01A00101	ACCELERATOR LEVER [HST TYPE]	100K0561
FUEL SYSTEM	01A10101	FUEL TANK	100K0561
	01A11001	FUEL PIPE	100K0561
	01A130	FUEL FILTER [COMPONENT PARTS]	100K0561
COOLING WATER SYSTEM	01A40101	FAN	100K0561
	01A41001	WATER PIPE	100K0561
	01A42001	RADIATOR [EXCEPT[AU]]	100K0561
	01A42002	RADIATOR [AU]	100K0561
	01A43001	RESERVE TANK [EXCEPT[AU]]	100K0561
	01A43002	RESERVE TANK [AU]	100K0561
ELECTRICAL SYSTEM	01A51001	STOP SOLENOID	100K0561
	01A52501	STARTER	100K0561
	01A53001	STARTER [COMPONENT PARTS]	100K0561
	01A53501	BATTERY [EXCEPT[AU]]	100K0561
	01A53502	BATTERY [AU]	100K0561
	01B10101	SWITCH [HST TYPE]	100K0561
	01B11501	PANEL BOARD	100K0561
	01B12001	PANEL BOARD [COMPONENT PARTS]	100K0561
	01B301	HEAD LIGHT	100K0561
	01B302	HAZARD LIGHT	100K0561

silverhorn.co.uk

Item	Part No.	Description	Book
ELECTRICAL SYSTEM	01B304	TAIL LIGHT	100K0561
	01B50101	ELECTRICAL WIRING [HST TYPE]	100K0561
CLUTCH	01C11001	CLUTCH ROD	100K0561
	01C301	CLUTCH PEDAL	100K0561
	01C40101	CLUTCH HOUSING	100K0561
	01C405	CLUTCH DIPSTICK AND GUIDE [HST TYPE]	100K0561
FRAME	01C41301	FRONT FRAME	100K0561
	01C41501	CENTER FRAME [HST TYPE]	100K0561
TRANSMISSION/REAR AXLE	01C42001	TRANSMISSION CASE [HST TYPE]	100K0561
	01C425	DIFFERENTIAL GEAR CASE	100K0561
	01C427	REAR AXLE CASE	100K0561
	01D00101	CLUTCH SHAFT	100K0561
	01D00501	PROPELLER SHAFT [HST TYPE]	100K0561
	01D010	HST [HST TYPE]	100K0561
	01D015	HST [COMPONENT PARTS] [HST TYPE]	100K0561
	01D10301	FRONT SHAFT [HST TYPE]	100K0561
	01D13501	PTO SHAFT [HST TYPE]	100K0561
	01D13701	MID PTO [HST TYPE]	100K0561
	01D140	REAR DIFFERENTIAL	100K0561
	01D14301	FRONT WHEEL PROPELLER SHAFT [HST TYPE]	100K0561
	01D14901	2ND SHAFT [HST TYPE]	100K0561
	01D15201	3RD SHAFT [HST TYPE]	100K0561
	01D15501	4TH SHAFT [HST TYPE]	100K0561
	01D21701	RANGE GEAR SHIFT FORK [HST TYPE]	100K0561
	01D22001	PTO GEAR SHIFT FORK [HST TYPE]	100K0561
	01D225	DIFFERENTIAL LOCK SHIFT FORK	100K0561
	01D301	REAR AXLE	100K0561
SPEED CHANGE LEVER/BRAKE	01E00101	BRAKE [HST TYPE]	100K0561
	01E00501	BRAKE ROD 1 [HST TYPE]	100K0561
	01E01501	PARKING BRAKE LEVER [HST TYPE] [EXCEPT[AU]]	100K0561
	01E01502	PARKING BRAKE LEVER [HST TYPE] [AU]	100K0561
	01F030	SPEED SET LEVER [HST TYPE]	100K0561
	01F107	NEUTRAL HOLDER LINK [HST TYPE]	100K0561
	01F108	SPEED CONTROL PEDAL [HST TYPE]	100K0561
	01F110	RANGE GEAR SHIFT LEVER [HST TYPE]	100K0561
	01F113	FRONT WHEEL DRIVE LEVER	100K0561
	01F125	PTO GEAR SHIFT LEVER	100K0561
	01F143	HYDRAULIC CONTROL LEVER	100K0561
	01F201	BRAKE PEDAL	100K0561
	01F20501	DIFFERENTIAL LOCK PEDAL [HST TYPE]	100K0561
FRONT AXLE	01G105	FRONT AXLE CASE	100K0561
	01G115	FRONT DIFFERENTIAL	100K0561
	01G120	DIFFERENTIAL GEAR SHAFT	100K0561
	01G123	BEVEL GEAR CASE	100K0561
	01G125	FRONT AXLE CASE	100K0561
	01G130	FRONT AXLE	100K0561
	01G13501	FRONT DRIVE SHAFT [HST TYPE]	100K0561
STEERING	01H001	KNUCKLE ARM	100K0561
	01H003	DRAG LINK	100K0561
	01H005	TIE ROD	100K0561
	01H10101	STEERING HANDLE	100K0561
	01H10501	UNIVERSAL JOINT	100K0561
	01H110	STEERING CONTROLLER	100K0561

silverhorn.co.uk

Item	Part No.	Description	Book
STEERING	01H115	STEERING CONTROLLER [COMPONENT PARTS]	100K0561
HYDRAULIC SYSTEM	01J20101	HYDRAULIC OIL LINE(SUCTION)	100K0561
	01J21001	HYDRAULIC OIL LINE(DELIVERY)	100K0561
	01J235	HYDRAULIC OIL LINE (HST) [HST TYPE]	100K0561
	01J24001	HYDRAULIC OIL LINE (OIL COOLER) [HST TYPE]	100K0561
	01J301	HYDRAULIC CYLINDER	100K0561
	01J310	HYDRAULIC PISTON/LIFT ARM	100K0561
	01J330	FEED BACK LEVER	100K0561
	01J405	CONTROL VALVE	100K0561
	01J410	CONTROL VALVE [COMPONENT PARTS]	100K0561
	01K101	3-POINT LINKAGE 2(LIFT ROD)	100K0561
	01K115	LOWER LINK	100K0561
	01K120	3-POINT LINKAGE 1(LOWER LINK)	100K0561
	01K125	CHECK CHAIN	100K0561
HITCH/DRAWBAR	01L105	DRAWBAR	100K0561
	01L115	HITCH	100K0561
	01L12501	PTO PROTECTOR [EXCEPT[AU]]	100K0561
	01L12502	PTO PROTECTOR [AU]	100K0561
HOOD(BONNET)/ROPS	01M10101	FRONT GRILLE [EXCEPT[AU]]	100K0561
	01M10102	FRONT GRILLE [AU]	100K0561
	01M10501	BONNET	100K0561
	01M113	PANEL COVER	100K0561
	01M120	SIDE COVER	100K0561
	01M13001	SHUTTER PLATE [EXCEPT[AU]]	100K0561
	01M13002	SHUTTER PLATE [AU]	100K0561
	01M20701	LEVER GUIDE [HST TYPE]	100K0561
	01M21001	FENDER [EXCEPT[AU]]	100K0561
	01M21002	FENDER [AU]	100K0561
	01M212	FENDER STAY	100K0561
	01M215	FLOOR SEAT	100K0561
	01M217	SEAT SUPPORT	100K0561
	01M22501	STEP	100K0561
	01M301	ROPS	100K0561
	01M501	SMV EMBLEM	100K0561
FRONT WHEEL/REAR WHEEL	01R10101	FRONT WHEEL (6-12) [EXCEPT[AU]]	100K0561
	01R10102	FRONT WHEEL (21X8.00-10) [EXCEPT[AU]]	100K0561
	01R10105	FRONT WHEEL (6-12B) [AU]	100K0561
	01R10107	FRONT WHEEL (22X8.50-12) [AU]	100K0561
	01R11001	REAR WHEEL (8.3-16) [EXCEPT[AU]]	100K0561
	01R11003	REAR WHEEL (29X12.5-15) [EXCEPT[AU]]	100K0561
	01R11004	REAR WHEEL (31X15.5-15) [EXCEPT[AU]]	100K0561
	01R11007	REAR WHEEL (8-16) [AU]	100K0561
	01R11009	REAR WHEEL (31X13.5-15) [AU]	100K0561
LABELS	01S10101	LABEL [HST TYPE] [A]	100K0561
	01S10102	LABEL [HST TYPE] [CA]	100K0561
	01S10103	LABEL [HST TYPE] [AU]	100K0561
ACCESSORIES	01T105	ACCESSORIES AND SERVICE PARTS	100K0561
OPTION	01U805	WARKING LIGHT KIT [OPTION]	100K0561
	01U910	ROPS KIT [OPTION]	100K0561

silverfarm.co.uk

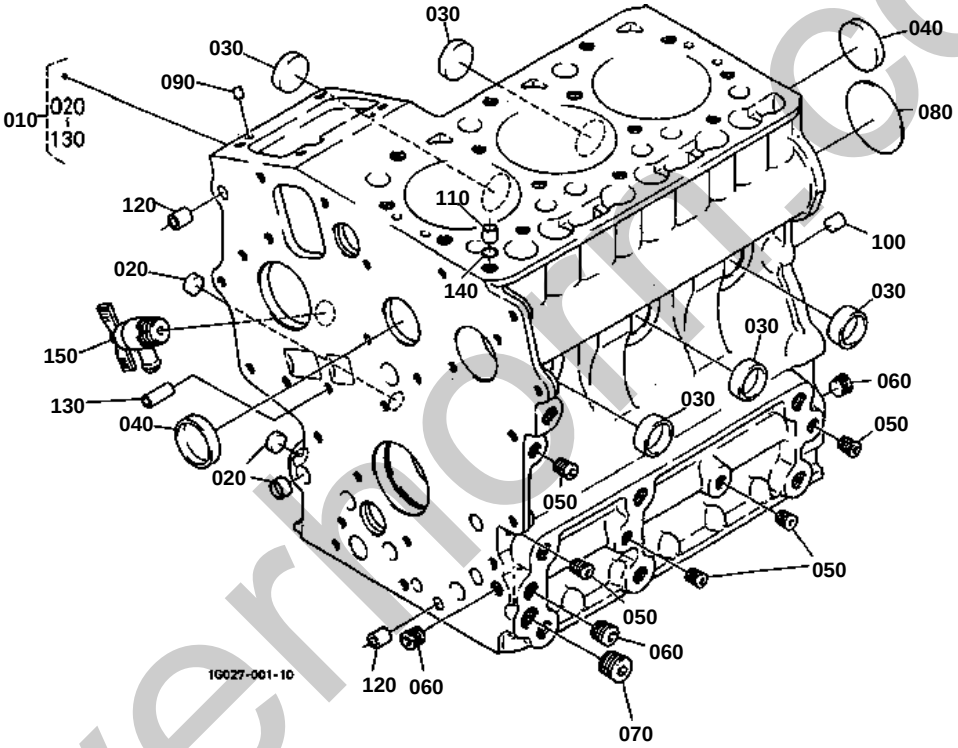

silverhorn.co.uk

CRANKCASE

↔ Interchangeable; ≠ not interchangeable; ← new for old; → old for new

REF.No	Part No.	Description	Q'ty	S.No.	I/C	REMARKS	Weight (kgf)	Weight (lb)
010	16813-01010	COMP.CRANKCASE	1				22	48.4
020	16851-96260	CAP SEALING	3				0.005	0.011
030	16851-96270	CAP SEALING	5				0.005	0.011
040	15451-96270	CAP SEALING	2				0.012	0.0264
050	15261-96010	PLUG	5				0.002	0.0044
060	15521-96020	PLUG	3				0.003	0.0066
070	15521-96030	PLUG	1				0.007	0.0154
080	15261-96160	PLUG EXPANSION	1				0.02	0.044
090	05012-00508	PIN STRAIGHT	2				0.001	0.0022
100	05012-00820	PIN STRAIGHT	2				0.008	0.0176
110	15221-33650	PIN PIPE	1				0.004	0.0088
120	15231-33960	PIN PIPE	2				0.001	0.0022
130	17331-59190	PIN PIPE	2				0.02	0.044
140	15221-33700	O RING	1				0.001	0.0022
150	15841-73020	ASSY COCK DRAIN	1				0.03	0.066

silverhorn.co.uk

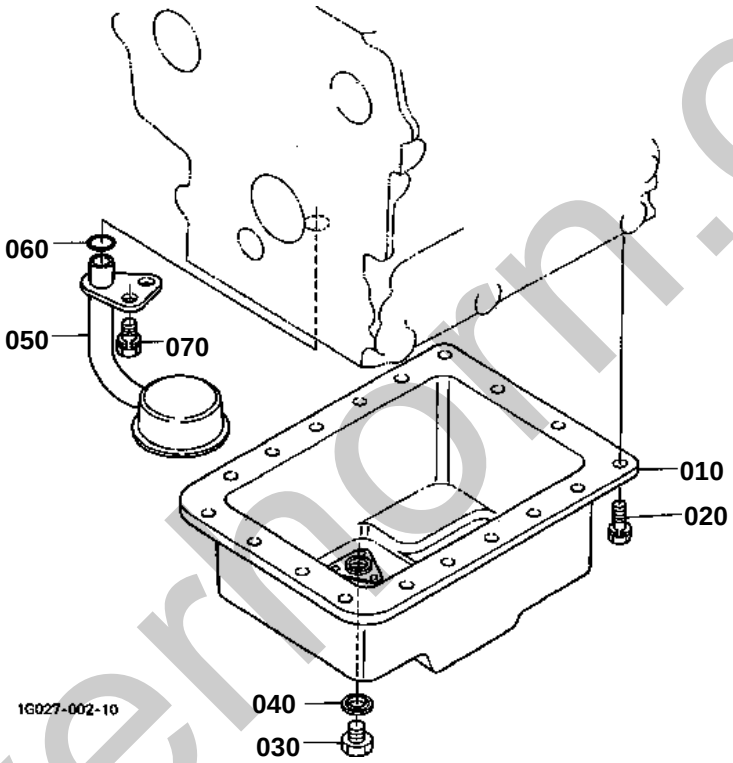

silverhorn.co.uk

OIL PAN

↔ Interchangeable; ≠ not interchangeable; ← new for old; → old for new

REF.No	Part No.	Description	Q'ty	S.No.	I/C	REMARKS	Weight (kgf)	Weight (lb)
010	6C090-58924	COMP.OIL PAN	1				0.75	1.65
020	01023-50612	BOLT	18				0.005	0.011
030	15221-33750	PLUG	1				0.032	0.0704
040	6C090-58960	GASKET	1				0.002	0.0044
050	16813-32110	FILTER OIL	1				0.11	0.242
060	04814-00160	O RING	1				0.001	0.0022
070	01123-60814	BOLT	1				0.008	0.0176

silverhorn.co.uk

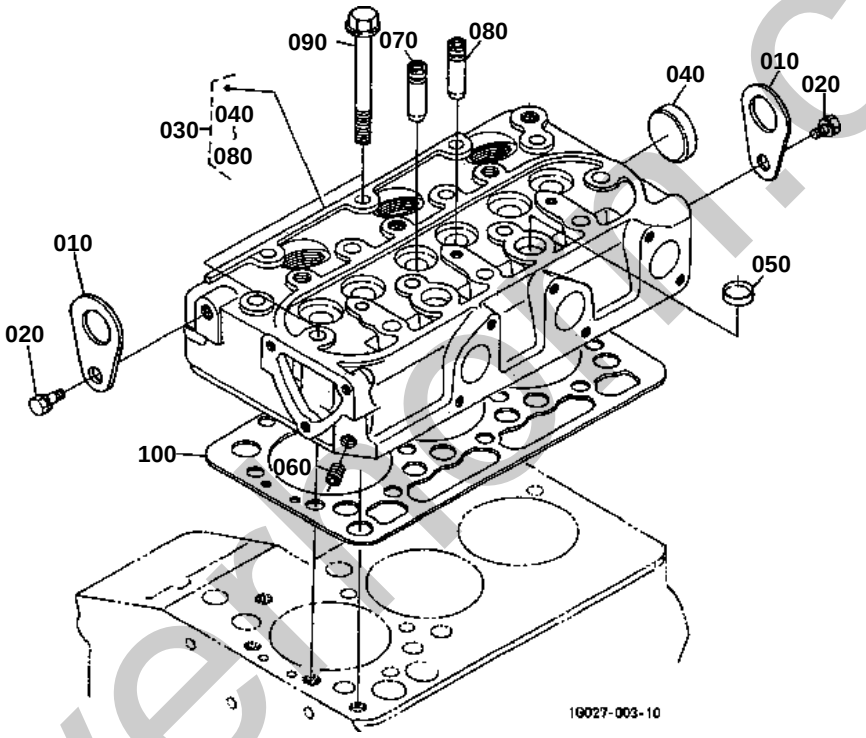

silverleaf.co.uk

CYLINDER HEAD

↔ Interchangeable; ≠ not interchangeable; ← new for old; → old for new

REF.No	Part No.	Description	Q'ty	S.No.	I/C	REMARKS	Weight (kgf)	Weight (lb)
010	15221-01750	HOOK ENGINE	2				0.04	0.088
020	01123-50816	BOLT	2				0.011	0.0242
030	17575-03042	COMP.CYLINDER HEAD	1				7.3	16.06
040	15321-96260	CAP SEALING	1				0.014	0.0308
050	15261-03370	CAP SEALING	2				0.005	0.011
060	15261-96010	PLUG	1				0.002	0.0044
070	15841-13540	GUIDE INLET VALVE	3				0.014	0.0308
080	15841-13560	GUIDE EXHAUST VALVE	3				0.014	0.0308
090	14601-03450	BOLT CYLINDER HEAD	14				0.035	0.077
100	16871-03310	GASKET CYLINDER HEAD	1				0.083	0.1826

silverhorn.co.uk

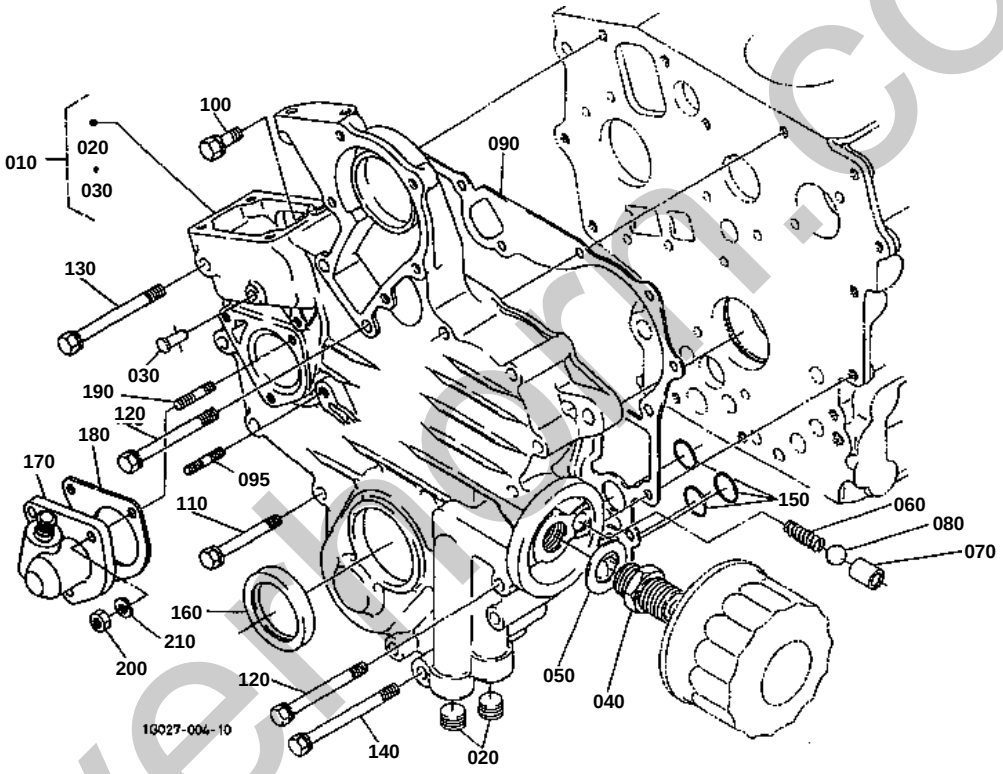

silverhurst.co.uk

GEAR CASE

↔ Interchangeable; ≠ not interchangeable; ← new for old; → old for new

REF.No	Part No.	Description	Q'ty	S.No.	I/C	REMARKS	Weight (kgf)	Weight (lb)
010	16875-04024	COMP.CASE GEAR	1				1.78	3.916
020	16851-96010	PLUG	2				0.015	0.033
030	15841-56280	PIN START SPRING	1				0.005	0.011
040	15241-32290	JOINT PIPE	1				0.053	0.1166
050	15841-94010	WASHER PLAIN	1				0.003	0.0066
060	16851-36950	SPRING	1				0.02	0.044
070	15841-36930	SEAT VALVE	1				0.01	0.022
080	07715-03211	BALL	1				0.003	0.0066
090	15862-04132	GASKET GEAR CASE NA	1				0.007	0.0154
095	15841-91510	STUD	1				0.007	0.0154
100	01023-50618	BOLT	1				0.006	0.0132
110	01023-60650	BOLT	8				0.015	0.033
120	15841-91010	BOLT	5				0.014	0.0308
130	01023-60670	BOLT	1				0.015	0.033
140	01023-50675	BOLT	1				0.01	0.022
150	04814-06130	O RING	3				0.01	0.022
160	15841-04140	SEAL OIL	1				0.012	0.0264
170	59360-25950	ASSY GEAR CASE H/M	1				0.29	0.638
180	19461-88132	GASKET H/M GEAR CASE	1				0.002	0.0044
190	15221-88210	STUD	3				0.005	0.011
200	02056-50060	NUT	3				0.002	0.0044
210	04512-60060	WASHER SPRING	3				0.001	0.0022

silverhorn.co.uk

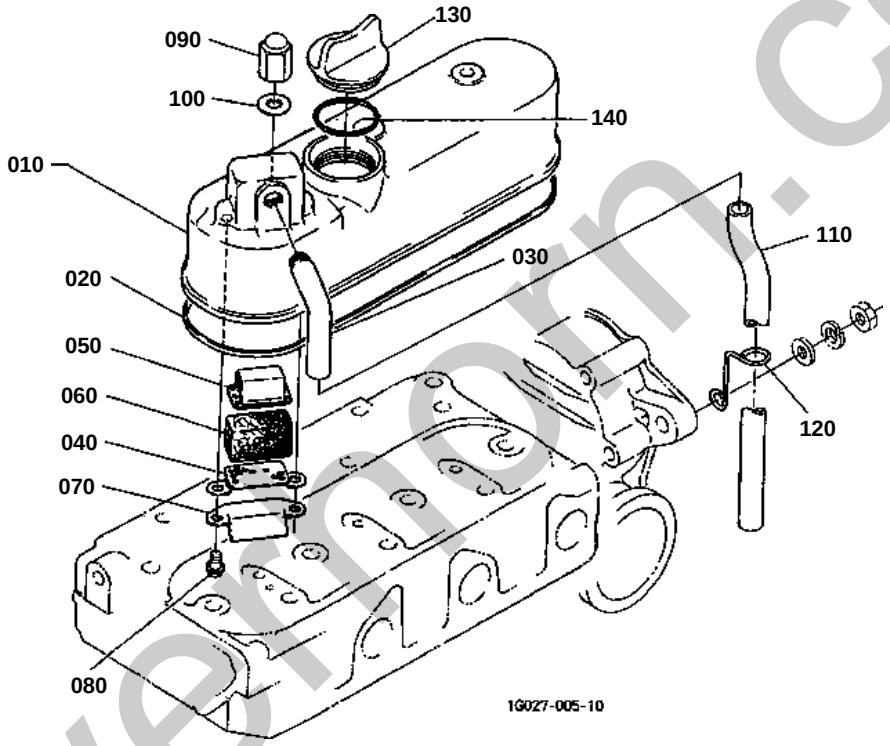

silvermorn.co.uk

HEAD COVER

↔ Interchangeable; ≠ not interchangeable; ← new for old; → old for new

REF.No	Part No.	Description	Q'ty	S.No.	I/C	REMARKS	Weight (kgf)	Weight (lb)
010	16861-14513	COVER CYL.HEAD	1				0.38	0.836
020	16861-14522	GASKET HEAD COVER	1				0.02	0.044
030	15881-05550	JOINT BREATHER PIPE	1				0.01	0.022
040	15841-05140	PLATE B/THER ELEMENT	1				0.005	0.011
050	15841-05150	PLATE B/THER ELEMENT	1				0.005	0.011
060	15841-05670	ELEMENT BREATHER	1				0.01	0.022
070	15841-05370	OIL SHIELD BREATHER	1				0.003	0.0066
080	16861-93310	SCREW	2				0.001	0.0022
090	15841-14620	NUT	3				0.01	0.022
100	15601-96650	GASKET	3				0.001	0.0022
110	15841-05590	CLAMP PIPE	1				0.005	0.011
120	15841-05510	PIPE BREATHER	1				0.04	0.088
130	15852-33140	PLUG OIL FILLER	1				0.038	0.0836
140	04814-50300	O RING	1				0.001	0.0022

silverhorn.co.uk

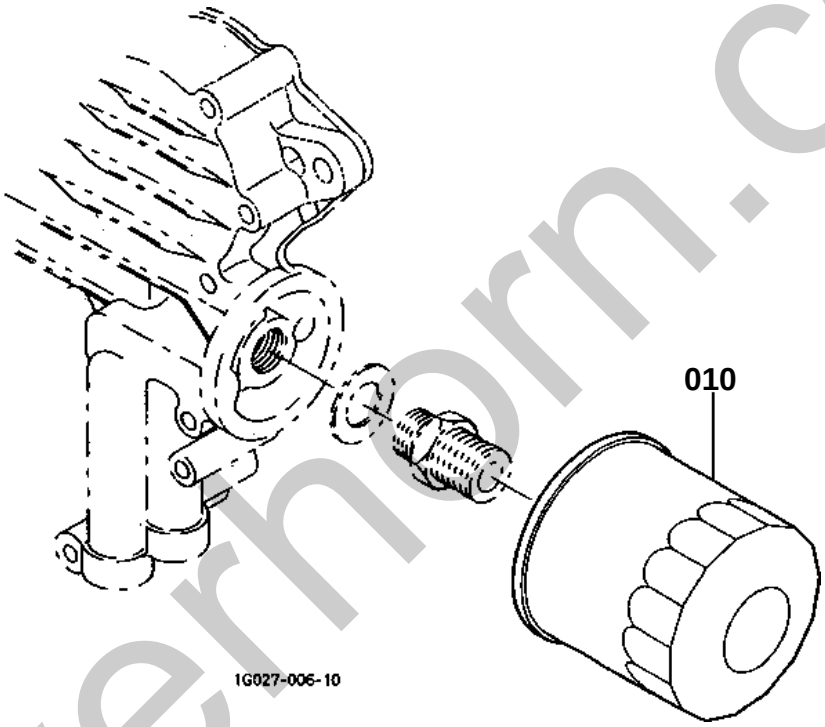

silverhorn.co.uk

OIL FILTER

↔ Interchangeable; ≠ not interchangeable; ← new for old; → old for new

REF.No	Part No.	Description	Q'ty	S.No.	I/C	REMARKS	Weight (kgf)	Weight (lb)
010	15853-32430	CARTRIDGE OIL FILTER	1				0.195	0.429

silverhorn.co.uk

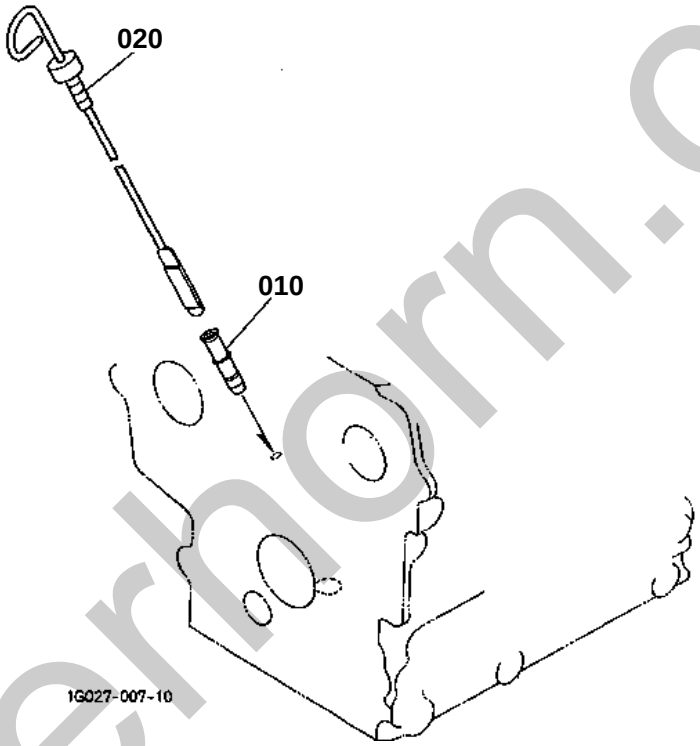

silverhorn.co.uk

DIPSTICK AND GUIDE

↔ Interchangeable; ≠ not interchangeable; ← new for old; → old for new

REF.No	Part No.	Description	Q'ty	S.No.	I/C	REMARKS	Weight (kgf)	Weight (lb)
010	17456-36420	GUIDE OIL GAUGE	1				0.033	0.0726
020	1K177-36410	GAUGE OIL	1				0.04	0.088

silverhorn.co.uk

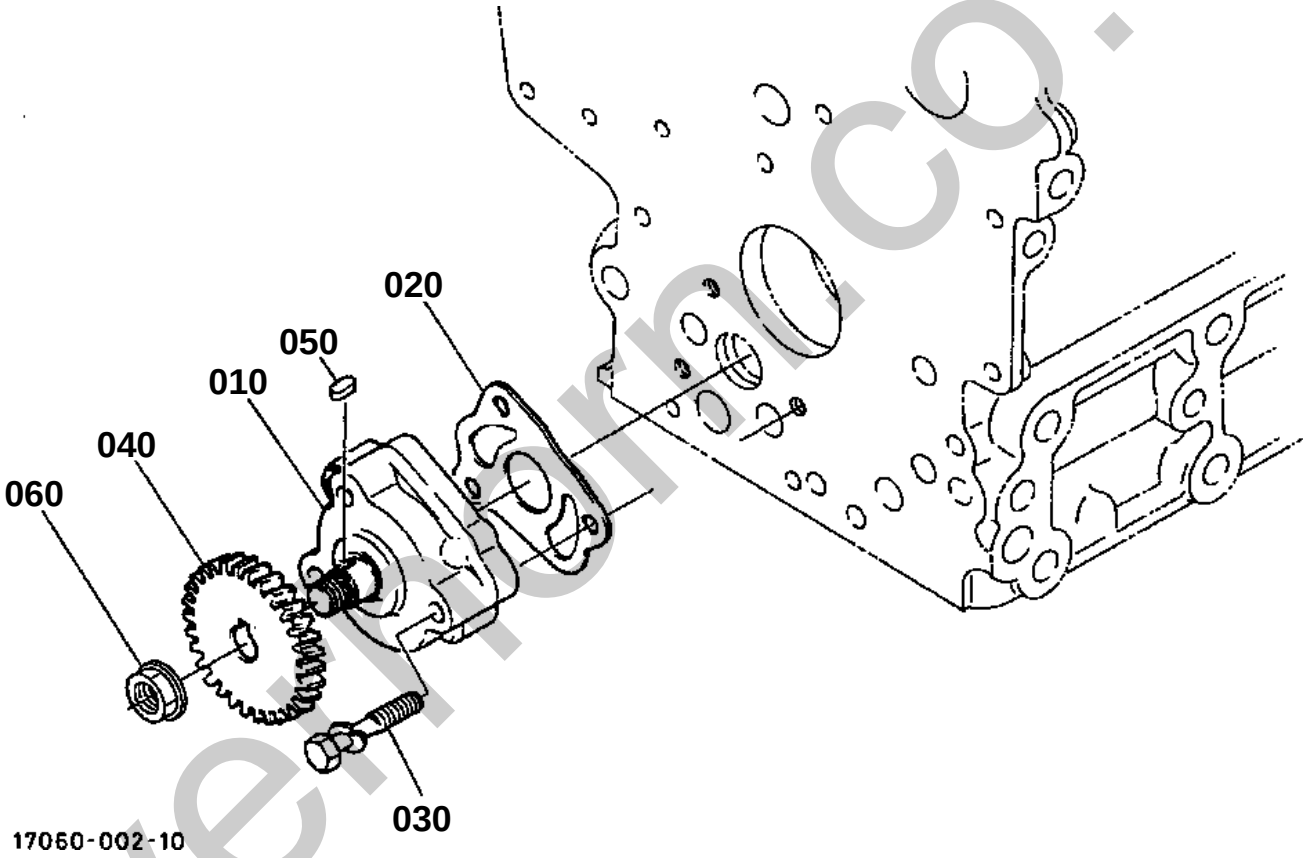

silverfarm.co.uk

OIL PUMP

↔ Interchangeable; ≠ not interchangeable; ← new for old; → old for new

REF.No	Part No.	Description	Q'ty	S.No.	I/C	REMARKS	Weight (kgf)	Weight (lb)
010	16851-35010	ASSY PUMP OIL	1				0.24	0.528
020	16851-35152	GASKET OIL PUMP NA	1				0.001	0.0022
030	15841-91050	BOLT	3				0.01	0.022
040	15841-35660	GEAR OIL PUMP DRIVE	1				0.113	0.2486
050	05712-00408	KEY FEATHER	1				0.001	0.0022
060	02783-50100	NUT FLANGE	1				0.01	0.022

silverhorn.co.uk

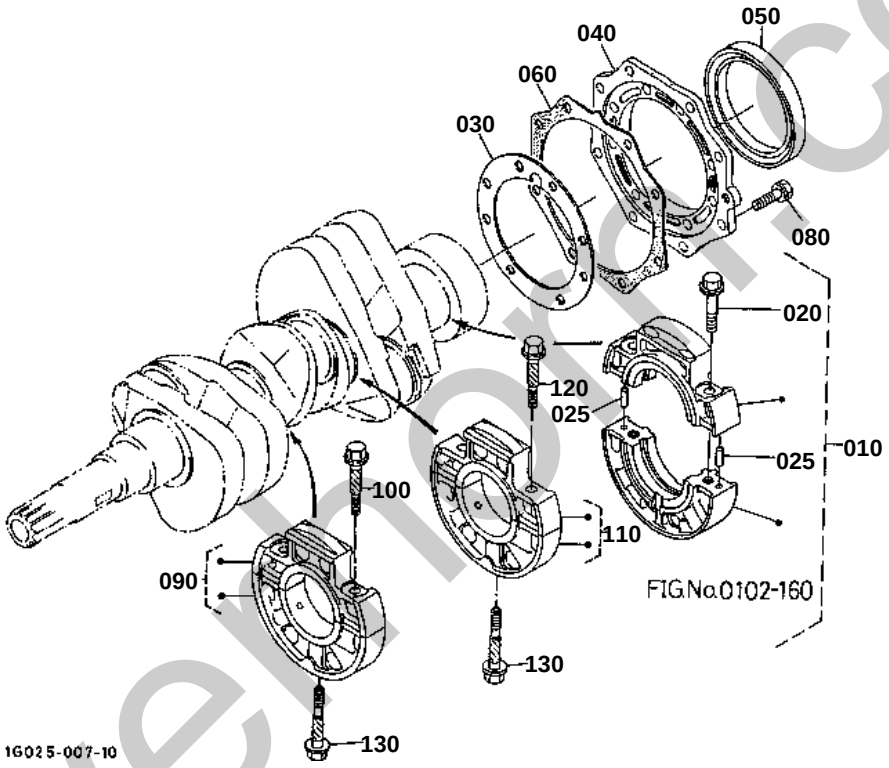

silverhorn.co.uk

MAIN BEARING CASE

↔ Interchangeable; ≠ not interchangeable; ← new for old; → old for new

REF.No	Part No.	Description	Q'ty	S.No.	I/C	REMARKS	Weight (kgf)	Weight (lb)
010	15821-04090	ASSY CASE MAIN BRG.	1				0	0
020	01754-50840	BOLT FLANGE	2				0.02	0.044
025	05012-00608	PIN STRAIGHT	2				0.002	0.0044
030	15852-04360	GASKET BEARING CASE	1				0.005	0.011
040	15841-04810	COVER BEARING CASE	1				0.16	0.352
050	09560-00007	SEAL OIL	1				0.029	0.0638
060	15841-04822	GASKET	1				0.004	0.0088
080	01023-50622	BOLT	16				0.005	0.011
090	16851-04040	ASSY CASE MAIN BRG.	1				0.58	1.276
100	15841-04540	BOLT BEARING CASE	2				0.012	0.0264
110	16861-04050	ASSY CASE MAIN BRG.	1				0.58	1.276
120	15841-04540	BOLT BEARING CASE	2				0.012	0.0264
130	15841-04562	BOLT BEARING CASE	2				0.02	0.044

silverhorn.co.uk

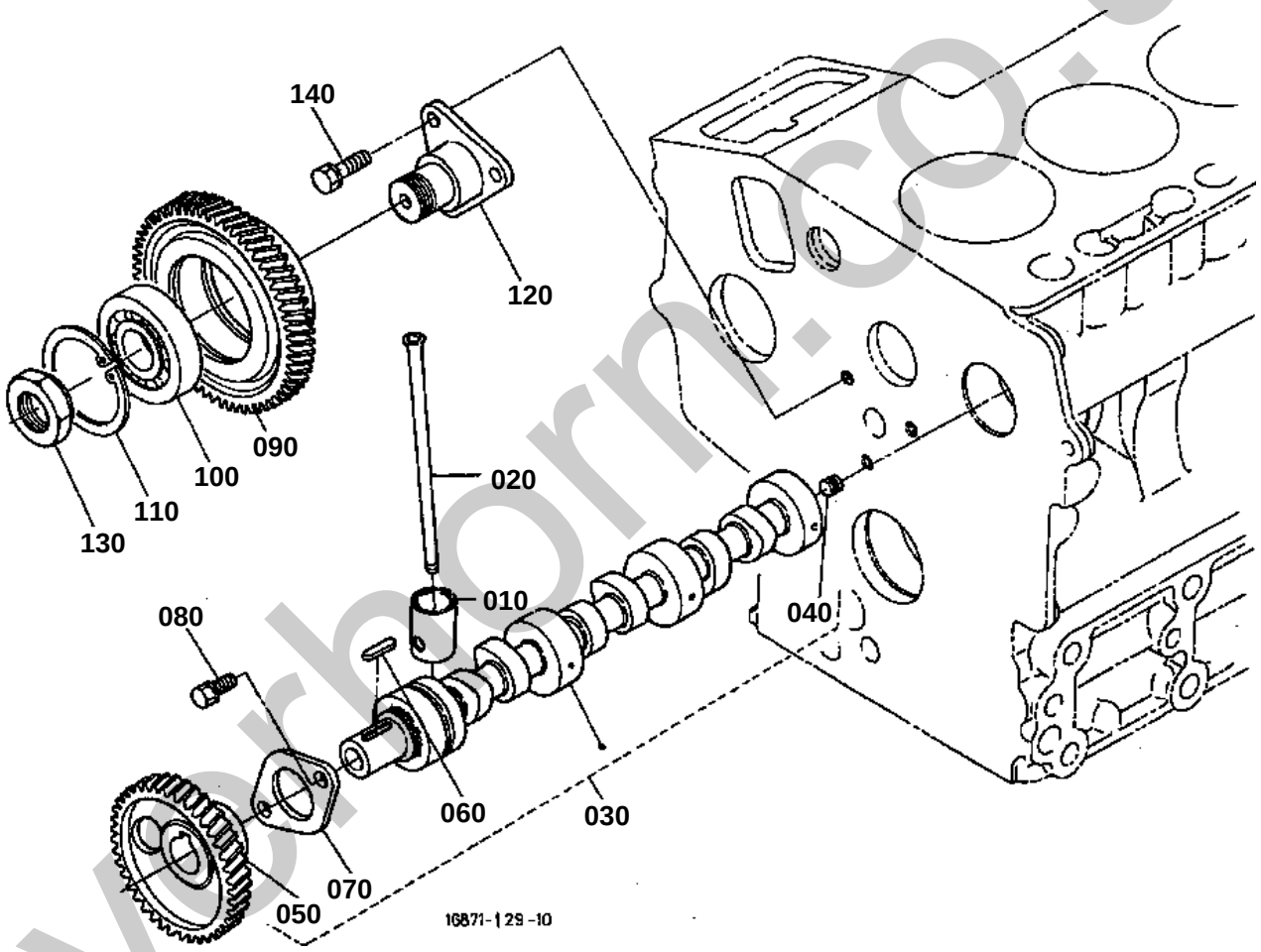

silverhorn.co.uk

CAMSHAFT AND IDLE GEAR SHAFT

↔ Interchangeable; ≠ not interchangeable; ← new for old; → old for new

REF.No	Part No.	Description	Q'ty	S.No.	I/C	REMARKS	Weight (kgf)	Weight (lb)
010	16851-15550	TAPPET	6				0.025	0.055
020	16851-15110	PUSH ROD	6				0.02	0.044
030	16864-16010	ASSY CAMSHAFT	1				1.05	2.31
040	15521-93610	SCREW SET	1				0.002	0.0044
050	16864-16510	GEAR CAM	1				0.262	0.5764
060	05712-00518	KEY FEATHER	1				0.003	0.0066
070	15841-16270	STOPPER CAMSHAFT	1				0.027	0.0594
080	01023-50612	BOLT	2				0.005	0.011
090	16864-24210	GEAR IDLE	1				0.41	0.902
100	16864-24290	BEARING	1				0.145	0.319
110	04611-00520	CIR CLIP INTERNAL	1				0.009	0.0198
120	16864-24250	SHAFT IDLE GEAR	1				0.16	0.352
130	16864-92010	NUT	1				0.02	0.044
140	01023-50614	BOLT	3				0.005	0.011

silverhorn.co.uk

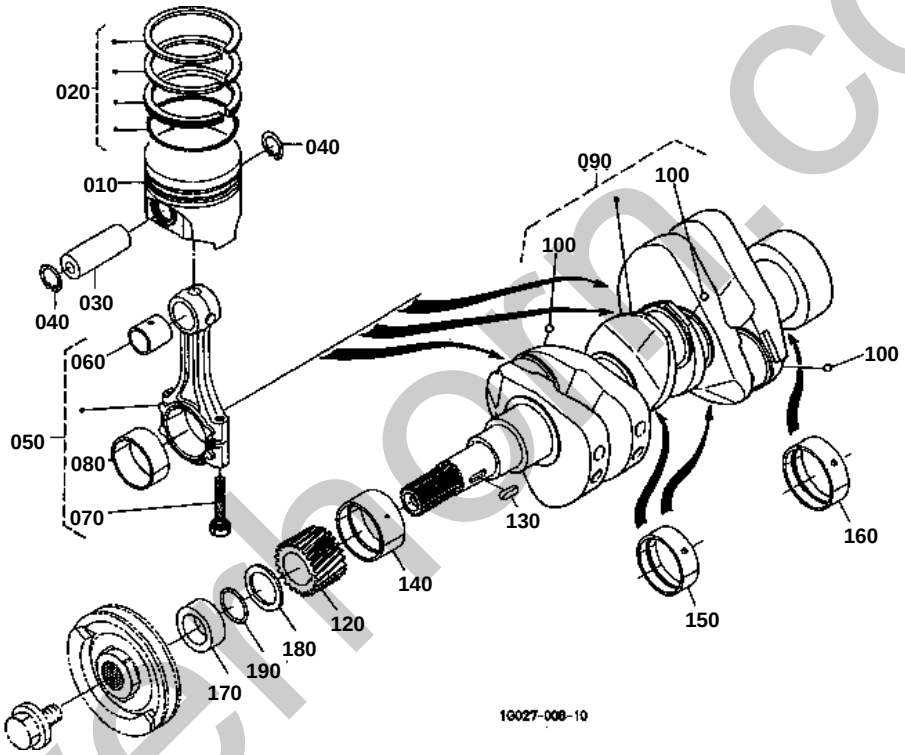

silverhorn.co.uk

PISTON AND CRANKSHAFT

↔ Interchangeable; ≠ not interchangeable; ← new for old; → old for new

REF.No	Part No.	Description	Q'ty	S.No.	I/C	REMARKS	Weight (kgf)	Weight (lb)
010	16851-21112	PISTON	3			STD	0.23	0.506
010	16851-21900	PISTON	3			+0.25MM	0.26	0.572
020	16853-21050	ASSY PISTON RING	3			STD	0.04	0.088
020	16851-21093	ASSY PISTON RING	3			+0.25MM	0.03	0.066
030	16851-21310	PIN PISTON	3				0.1	0.22
040	15261-21330	CIR CLIP PISTON PIN	6				0.001	0.0022
050	16851-22010	ASSY CONNECTING ROD	3				0.47	1.034
060	16851-21980	BUSH PISTON PIN	3				0.01	0.022
070	16851-22140	BOLT CONNECTING ROD	6				0.012	0.0264
080	16851-22320	METAL CRANKPIN M	3			STD SET	0.04	0.088
080	15861-22970	METAL CRANKPIN	3			-0.20MM SET	0.03	0.066
080	15861-22980	METAL CRANKPIN	3			-0.40MM SET	0.03	0.066
090	16861-23010	COMP.CRANKSHAFT	1				5.56	12.232
100	07715-03207	BALL	3				0.001	0.0022
120	16864-24110	GEAR CRANKSHAFT	1				0.08	0.176
130	05712-00515	KEY FEATHER	1				0.003	0.0066
140	15861-23470	METAL CRANKSHAFT	1			STD	0.03	0.066
140	15861-23910	METAL CRANKSHAFT	1			-0.20MM	0.04	0.088
140	15861-23920	METAL CRANKSHAFT	1			-0.40MM	0.04	0.088
150	16861-23490	METAL CRANKSHAFT M	2			STD SET	0.02	0.044
150	15861-23860	METAL CRANKSHAFT	2			-0.20MM SET	0.03	0.066
150	15861-23870	METAL CRANKSHAFT	2			-0.40MM SET	0.03	0.066
160	16861-23480	METAL CRANKSHAFT M	1			STD SET	0.03	0.066
160	15694-23930	METAL CRANKSHAFT	1			-0.20MM SET	0.05	0.11
160	15694-23940	METAL CRANKSHAFT	1			-0.40MM SET	0.046	0.1012
170	15841-23250	COLLAR CRANKSHAFT	1				0.05	0.11
180	15881-23310	SLINGER OIL	1				0.004	0.0088
190	04814-16220	O RING	1				0.001	0.0022

silverhorn.co.uk

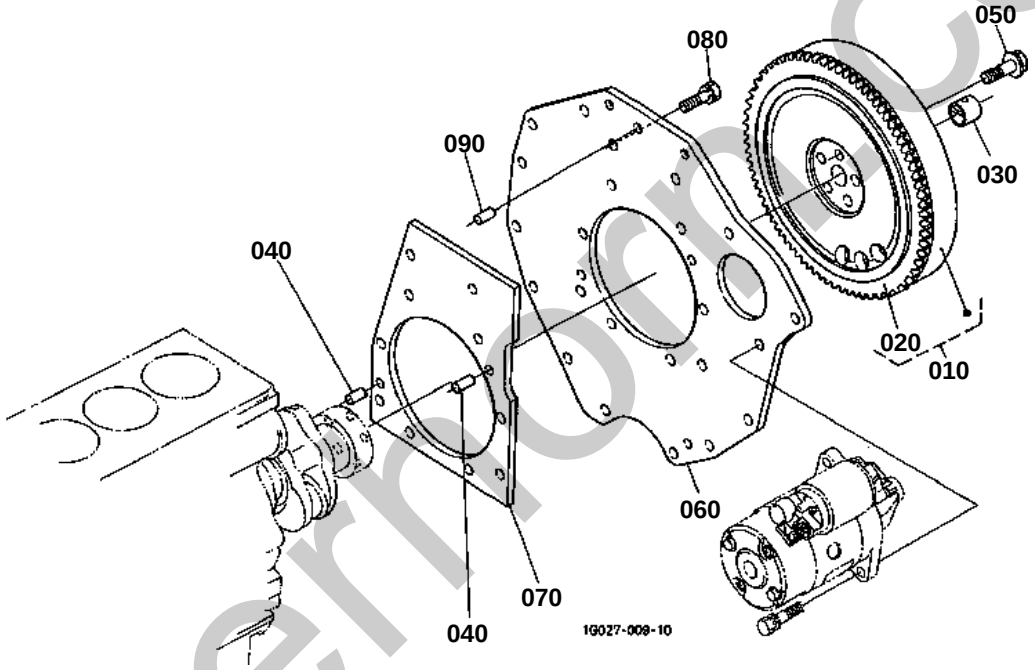

silvermoor.co.uk

FLYWHEEL

↔ Interchangeable; ≠ not interchangeable; ← new for old; → old for new

REF.No	Part No.	Description	Q'ty	S.No.	I/C	REMARKS	Weight (kgf)	Weight (lb)
010	16813-25010	COMP.FLYWHEEL	1				11.5	25.3
020	16813-63820	GEAR RING	1				0.62	1.364
030	66621-14120	BEARING DRY	1				0.006	0.0132
040	05012-00816	PIN STRAIGHT	2				0.007	0.0154
050	15533-25162	BOLT FLYWHEEL	5				0.03	0.066
060	6C090-58910	PLATE REAR END	1				4	8.8
070	6C090-58940	PLATE REAR END	1				1	2.2
080	01123-50825	BOLT	10				0.013	0.0286
090	05012-00816	PIN STRAIGHT	1				0.007	0.0154

silverhorn.co.uk

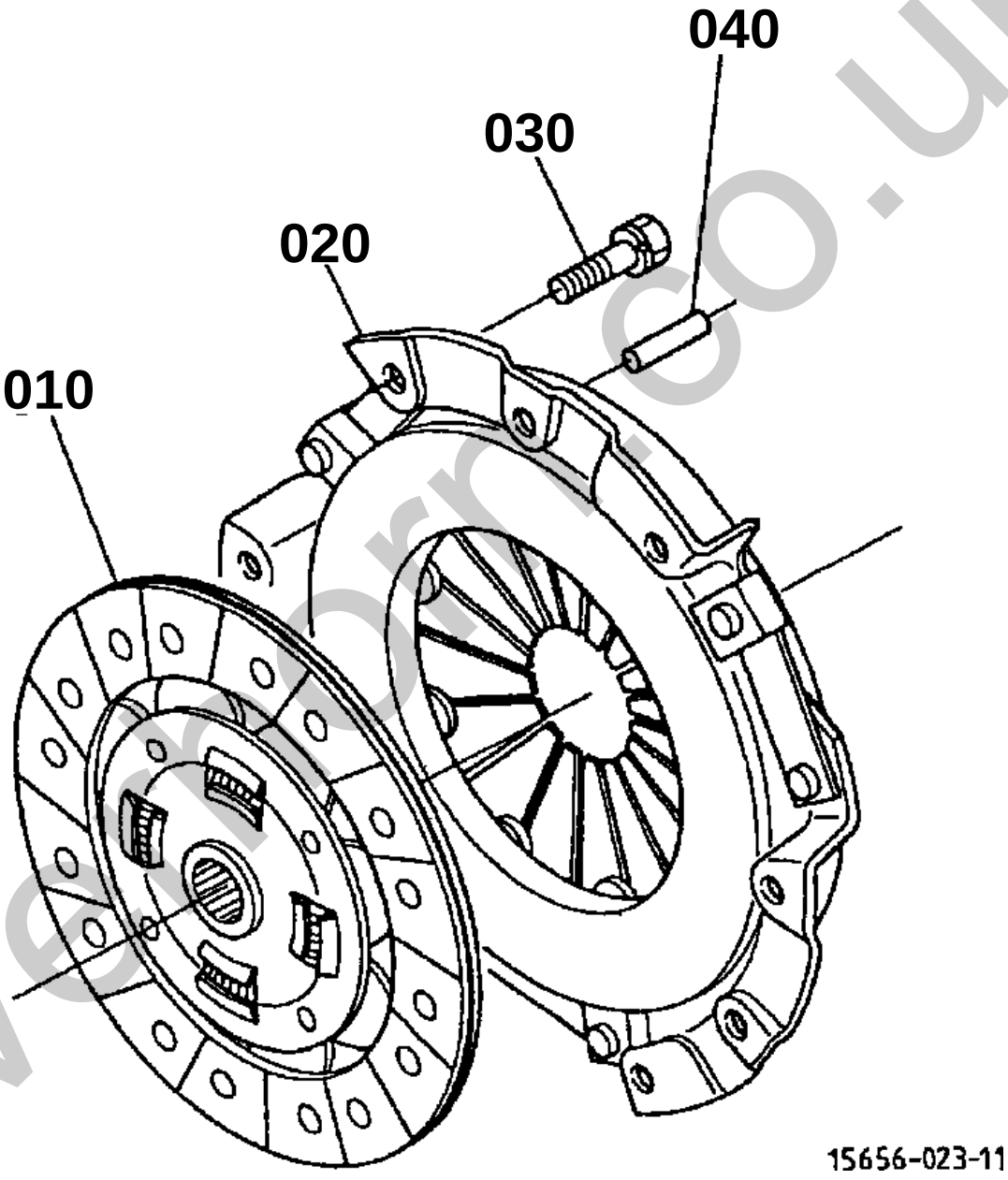

silvermorn.co.uk

CLUTCH

↔ Interchangeable; ≠ not interchangeable; ← new for old; → old for new

REF.No	Part No.	Description	Q'ty	S.No.	I/C	REMARKS	Weight (kgf)	Weight (lb)
010	6C090-13400	COMP.DISK CLUTCH	1				0.92	2.024
020	6C090-13300	ASSY PLATE PRESSURE	1				2.3	5.06
030	01123-50816	BOLT	6				0.011	0.0242
040	05012-00814	PIN STRAIGHT	3				0.006	0.0132

silverhorn.co.uk

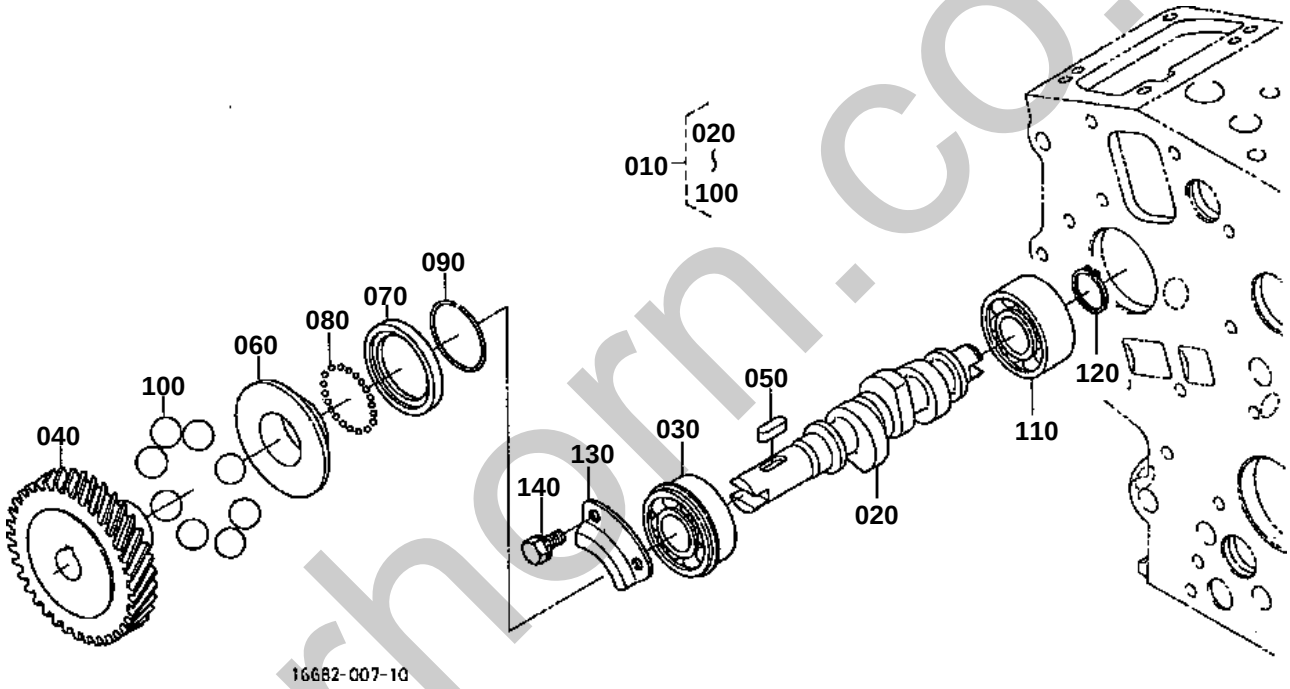

silverhorn.co.uk

FUEL CAMSHAFT AND GOVERNOR SHAFT

↔ Interchangeable; ≠ not interchangeable; ← new for old; → old for new

REF.No	Part No.	Description	Q'ty	S.No.	I/C	REMARKS	Weight (kgf)	Weight (lb)
010	16861-16020	ASSY CAMSHAFT FUEL	1				0.856	1.8832
020	15875-16170	CAMSHAFT FUEL	1				0.316	0.6952
030	08153-06203	BEARING BALL	1				0.08	0.176
040	16851-51150	GEAR INJECTION PUMP	1				0.2	0.44
050	05712-00515	KEY FEATHER	1				0.003	0.0066
060	15841-55450	SLEEVE GOVERNOR	1				0.05	0.11
070	15841-55690	CASE GOVERNOR BALL	1				0.02	0.044
080	07715-00801	BALL	32				0.001	0.0022
090	15261-55470	CIR-CLIP GOV. SLEEVE	1				0.002	0.0044
100	07715-03217	BALL	8				0.01	0.022
110	08103-06203	BEARING BALL	1				0.065	0.143
120	04612-00170	CIR CLIP EXTERNAL	1				0.001	0.0022
130	15841-16320	STOPPER FUEL.C/SHAFT	1				0.015	0.033
140	01023-50612	BOLT	2				0.005	0.011

silverhorn.co.uk

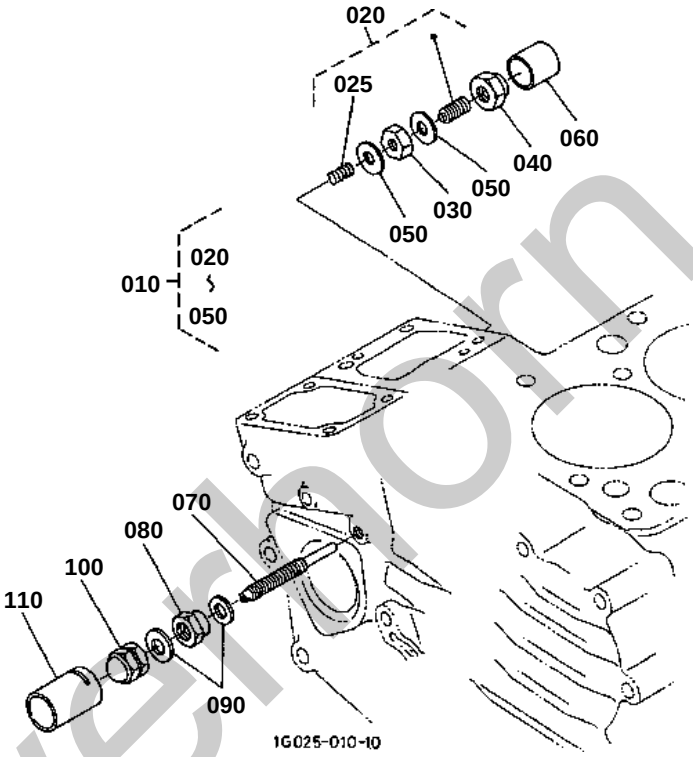

silverhorn.co.uk

ENGINE STOP LEVER

↔ Interchangeable; ≠ not interchangeable; ← new for old; → old for new

REF.No	Part No.	Description	Q'ty	S.No.	I/C	REMARKS	Weight (kgf)	Weight (lb)
010	15841-54092	ASSY APPARATUS IDLE	1				0.02	0.044
020	15841-54100	ASSY BOLT ADJUSTING	1				0.009	0.0198
025	15841-54260	SPRING	1				0.001	0.0022
030	15261-92020	NUT	1				0.004	0.0088
040	15841-54220	NUT	1				0.006	0.0132
050	15021-33660	GASKET	2				0.001	0.0022
060	15841-54270	CAP	1				0.001	0.0022
070	15841-54122	BOLT ADJUSTING	1				0.008	0.0176
080	1G031-54210	NUT LOCK	1				0.003	0.0066
090	15601-96650	GASKET	2				0.001	0.0022
100	15841-92330	NUT	1				0.006	0.0132
110	1G021-54290	PIPE LOCK	1				0.006	0.0132

silverhorn.co.uk

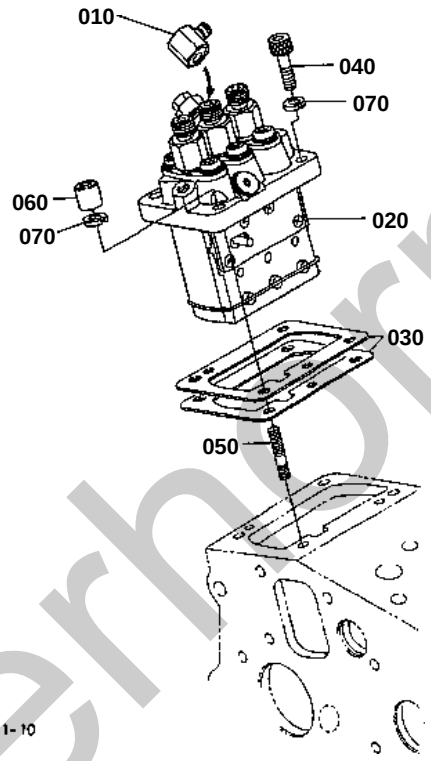

silverhorn.co.uk

↔ Interchangeable; ≠ not interchangeable; ← new for old; → old for new

REF.No	Part No.	Description	Q'ty	S.No.	I/C	REMARKS	Weight (kgf)	Weight (lb)
010	15841-95680	JOINT EYE	1				0.03	0.066
020	16006-51010	ASSY PUMP INJECTION	1			REFER TO L.No.C09-L FOR COMPONENTS.	1.1	2.42
030	16006-52092	SHIM INJECTION PUMP	1			0.20mm	0.004	0.0088
030	16006-52112	SHIM INJECTION PUMP	1			0.25mm	0.004	0.0088
030	16006-52122	SHIM INJECTION PUMP	1			0.30mm	0.006	0.0132
040	01311-10620	BOLT HEX-SOC-HD	2				0.012	0.0264
050	15841-91500	STUD	2				0.04	0.088
060	15841-92320	NUT	2				0.01	0.022
070	04512-60060	WASHER SPRING	4				0.001	0.0022

silverhorn.co.uk

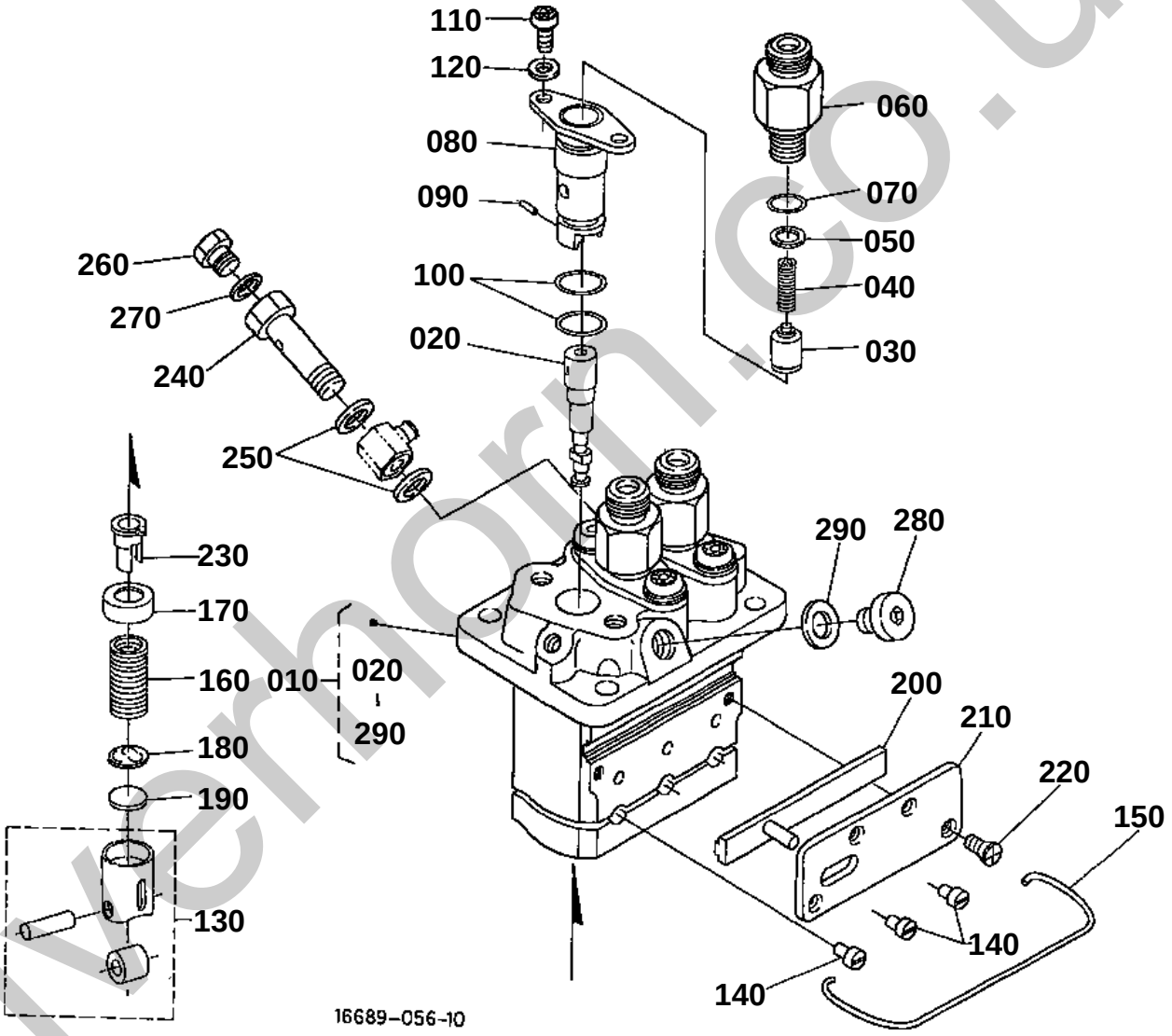

silverhorn.co.uk

INJECTION PUMP [COMPONENT PARTS]

↔ Interchangeable; ≠ not interchangeable; ← new for old; → old for new

REF.No	Part No.	Description	Q'ty	S.No.	I/C	REMARKS	Weight (kgf)	Weight (lb)
010	16006-51010	ASSY PUMP INJECTION	1				1.1	2.42
020	16851-51050	PLUNGER PUMP	3				0.035	0.077
030	15841-51030	VALVE DELIVERY	3				0.015	0.033
040	15841-51230	SPRING DELIV.VALVE	3				0.004	0.0088
050	15841-51240	GASKET DELIV.VALVE	3				0.001	0.0022
060	16851-51220	HOLDER DELIVE.VALVE	3				0.045	0.099
070	15841-96760	O RING	3				0.001	0.0022
080	15841-51560	FLANGE SLEEVE	3				0.06	0.132
090	15841-94570	PIN JOINT	3				0.001	0.0022
100	15841-51200	O RING	6				0.001	0.0022
110	15862-91430	SCREW	6				0.01	0.022
120	15852-51470	WASHER	6				0.002	0.0044
130	15841-51070	ASSY TAPPET	3				0.03	0.066
140	15841-51250	PIN TAPPET GUIDE	3				0.001	0.0022
150	15861-51430	PIN CLAMP	1				0.002	0.0044
160	15841-51280	SPRING PLUNGER	3				0.015	0.033
170	15841-51270	SEAT SPRING UPPER	3				0.005	0.011
180	15841-51290	SEAT SPRING LOWER	3				0.005	0.011
190	15841-51490	SHIM	3				0.005	0.011
200	15861-51060	RACK CONTROL	1				0.02	0.044
210	15861-51540	PLATE	1				0.02	0.044
220	15841-93110	SCREW CSK-HD	4				0.001	0.0022
230	15841-51380	SLEEVE CONTROL	3				0.006	0.0132
240	15841-51320	SCREW FOLLOW	1				0.024	0.0528
250	15841-96650	GASKET	2				0.001	0.0022
260	15841-51350	SCREW	1				0.005	0.011
270	15841-96660	GASKET	1				0.001	0.0022
280	15861-91010	BOLT	1				0.013	0.0286
290	15861-96650	GASKET	1				0.001	0.0022

silverhorn.co.uk

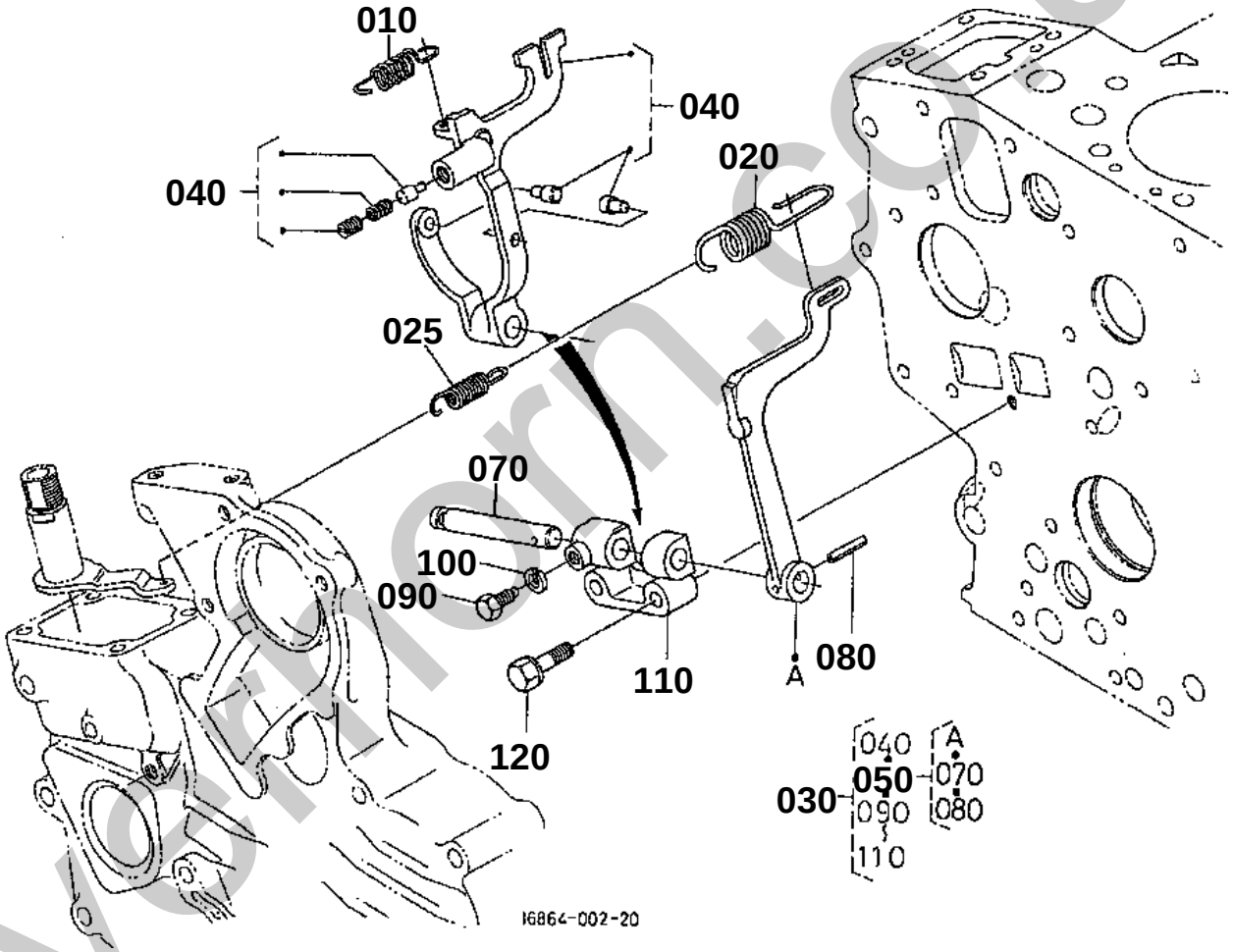

silvermorn.co.uk

GOVERNOR

↔ Interchangeable; ≠ not interchangeable; ← new for old; → old for new

REF.No	Part No.	Description	Q'ty	S.No.	I/C	REMARKS	Weight (kgf)	Weight (lb)
010	15841-56480	SPRING START	1				0.001	0.0022
020	16864-56410	SPRING GOVERNOR	1				0.004	0.0088
025	16864-56420	SPRING GOVERNOR	1				0.003	0.0066
030	16813-56050	ASSY LEVER FORK	1				0.25	0.55
040	16813-56040	COMP.LEVER FORK	1				0.12	0.264
050	17563-56060	ASSY LEVER FORK	1				0.09	0.198
070	15841-56150	SHAFT FORK LEVER	1				0.035	0.077
080	05411-00318	PIN SPRING	1				0.001	0.0022
090	15261-66410	BOLT	1				0.003	0.0066
100	04512-60050	WASHER SPRING	1				0.002	0.0044
110	15841-56230	HOLDER FORK LEVER	1				0.035	0.077
120	01023-50635	BOLT	2				0.01	0.022

silverhorn.co.uk

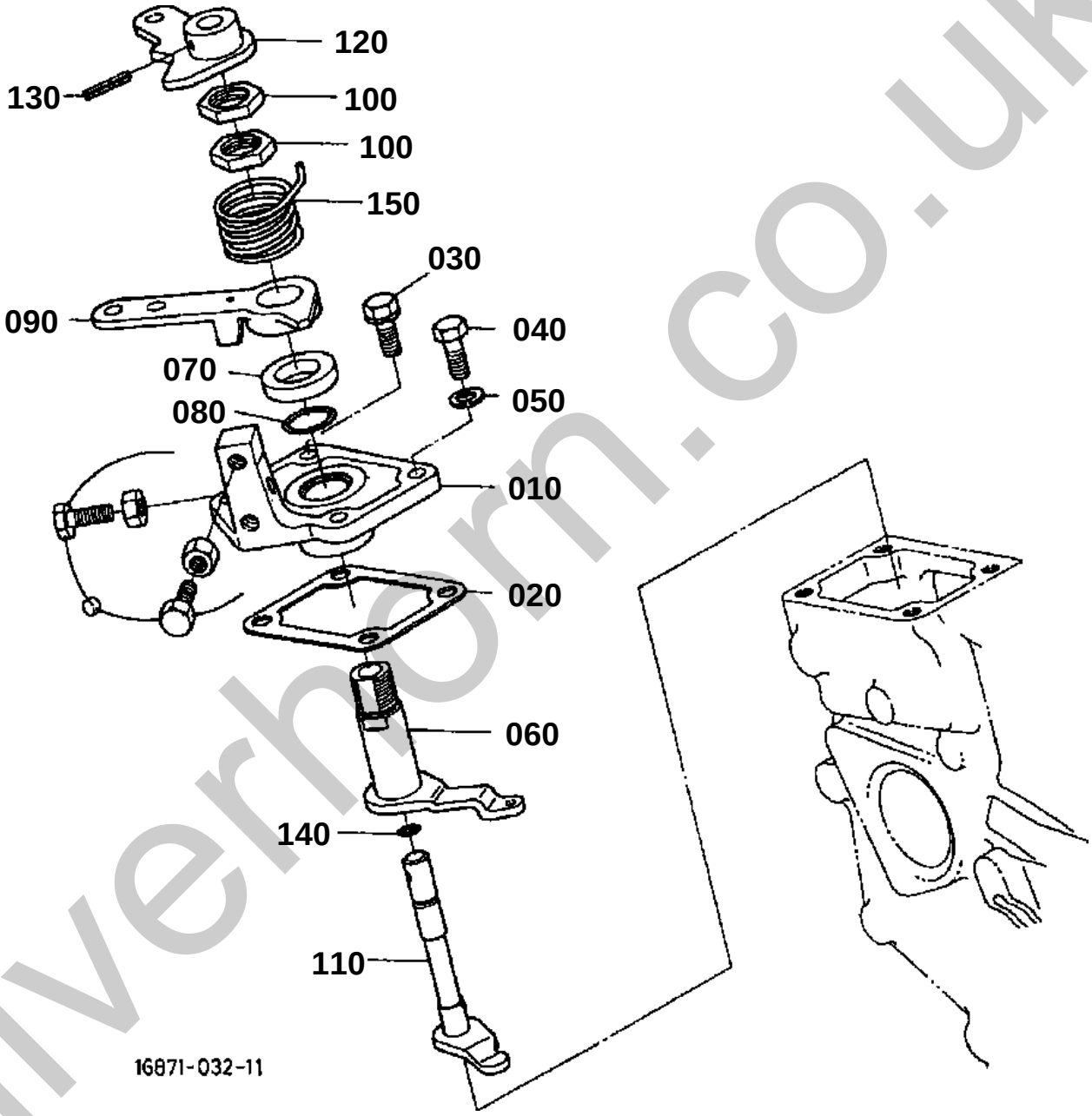

silverhorn.co.uk

SPEED CONTROL PLATE

↔ Interchangeable; ≠ not interchangeable; ← new for old; → old for new

REF.No	Part No.	Description	Q'ty	S.No.	I/C	REMARKS	Weight (kgf)	Weight (lb)
010	15841-57110	PLATE SPEED CONTROL	1				0.12	0.264
020	15841-57212	GASKET CONTROL PLATE	1				0.001	0.0022
030	01023-50618	BOLT	2				0.006	0.0132
040	01053-50618	BOLT	2				0.006	0.0132
050	15601-96650	GASKET	2				0.001	0.0022
060	15841-56110	LEVER GOVERNOR	1				0.06	0.132
070	15841-57240	COLLAR	1				0.01	0.022
080	04814-10160	O RING	1				0.001	0.0022
090	16667-57150	LEVER SPEED CONTROL	1				0.045	0.099
100	15841-92010	NUT SPEED CONTROL	2				0.007	0.0154
110	16878-57740	SHAFT LEVER	1				0.041	0.0902
120	19837-57720	LEVER ENGINE STOP	1				0.04	0.088
130	05411-00318	PIN SPRING	1				0.001	0.0022
140	04814-10070	O RING	1				0.001	0.0022
150	15841-57920	SPRING RETURN	1				0.008	0.0176

silverhorn.co.uk

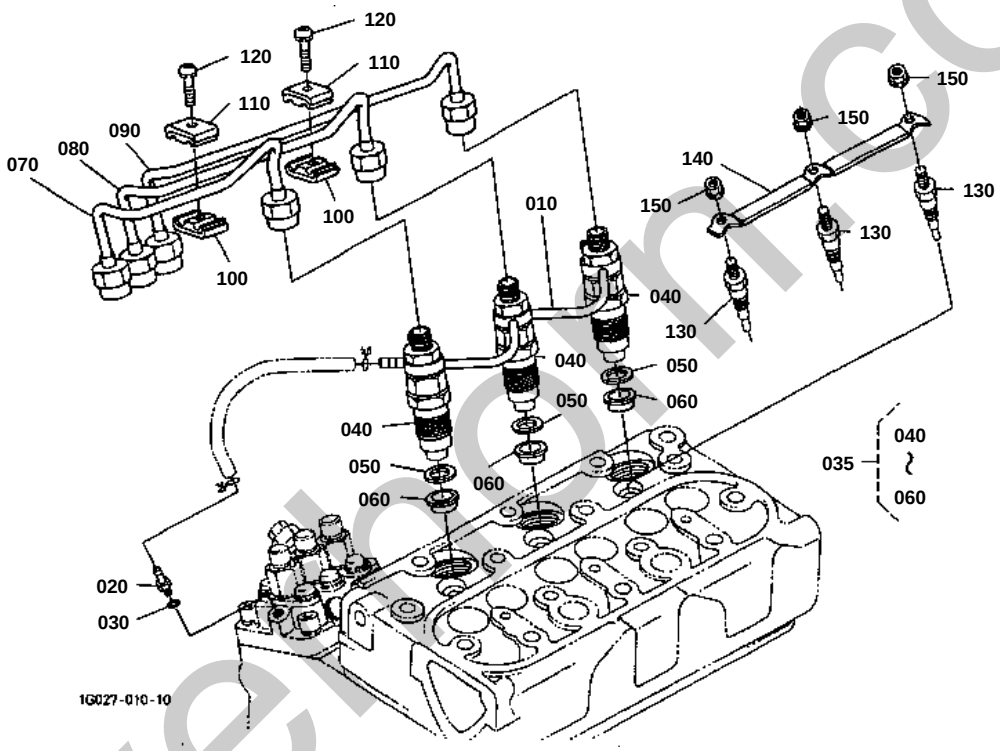

silverboom.co.uk

NOZZLE HOLDER AND GLOW PLUG

↔ Interchangeable; ≠ not interchangeable; ← new for old; → old for new

REF.No	Part No.	Description	Q'ty	S.No.	I/C	REMARKS	Weight (kgf)	Weight (lb)
010	15862-42502	ASSY PIPE OVER FLOW	1				0.042	0.0924
020	15841-51360	SCREW AIR BREEDER	1				0.008	0.0176
030	15601-96650	GASKET	1				0.001	0.0022
035	16001-53900	KIT HOLDER NOZZLE	3			REFER TO L.No.C11-L FOR COMPONENTS.	0.13	0.286
040	16001-53000	ASSY HOLDER NOZZLE	3				0.13	0.286
050	15841-53622	GASKET	3				0.002	0.0044
060	19077-53650	SEAL HEAT	3				0.005	0.011
070	16851-53712	PIPE INJECTION	1				0.1	0.22
080	16851-53722	PIPE INJECTION	1				0.1	0.22
090	16861-53732	PIPE INJECTION	1				0.1	0.22
100	15841-53850	CLAMP PIPE	2				0.01	0.022
110	15841-53860	CLAMP PIPE	2				0.009	0.0198
120	03024-50520	SCREW WITH WASHER	2				0.004	0.0088
130	16851-65510	GLOW PLUG	3				0.02	0.044
140	16861-65560	CORD GLOW PLUG	1				0.02	0.044
150	02761-50040	NUT FLANGE	3				0.002	0.0044

silverhorn.co.uk

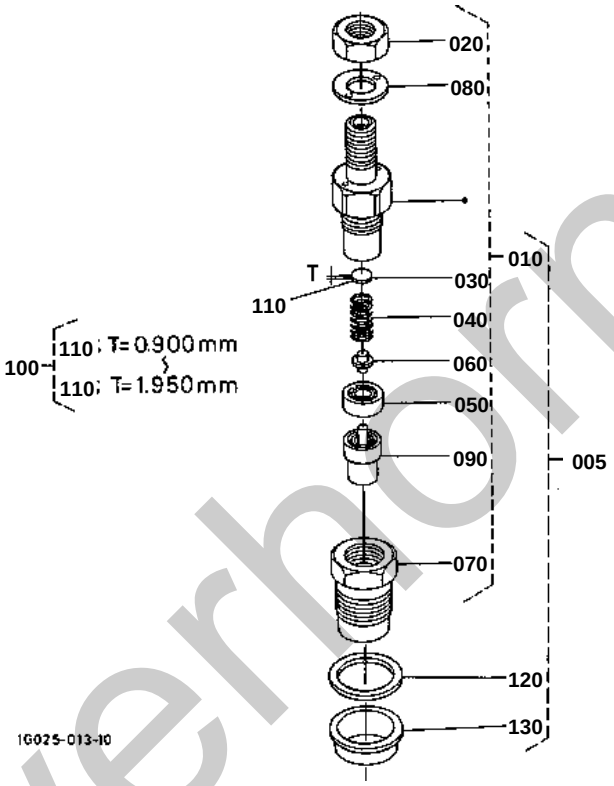

silverhorn.co.uk

NOZZLE HOLDER [COMPONENT PARTS]

↔ Interchangeable; ≠ not interchangeable; ← new for old; → old for new

REF.No	Part No.	Description	Q'ty	S.No.	I/C	REMARKS	Weight (kgf)	Weight (lb)
005	16001-53900	KIT HOLDER NOZZLE	3				0.13	0.286
010	16001-53000	ASSY HOLDER NOZZLE	3				0.13	0.286
020	15841-92030	NUT	3				0.005	0.011
030	15841-53230	WASHER ADJUSTING	3			0.900MM	0.001	0.0022
040	15841-53170	SPRING NOZZLE	3				0.004	0.0088
050	15841-53350	PIECE DISTANCE	3				0.004	0.0088
060	15841-53160	PUSH ROD	3				0.001	0.0022
070	16475-53280	NUT NOZZLE	3				0.03	0.066
080	15841-94040	WASHER	3				0.001	0.0022
090	16851-53610	PIECE NOZZLE	3				0.03	0.066
100	15841-98100	ASSY WASHER ADJUST	3			OPTION	0.043	0.0946
110	15841-53230	WASHER ADJUSTING	3			0.900MM	0.001	0.0022
110	15841-98510	WASHER ADJUSTING	3			0.925MM	0.001	0.0022
110	15841-98520	WASHER ADJUSTING	3			0.950MM	0.001	0.0022
110	15841-98530	WASHER ADJUSTING	3			0.975MM	0.001	0.0022
110	15841-98540	WASHER ADJUSTING	3			1.000MM	0.001	0.0022
110	15841-98550	WASHER ADJUSTING	3			1.025MM	0.001	0.0022
110	15841-98560	WASHER ADJUSTING	3			1.050MM	0.001	0.0022
110	15841-98570	WASHER ADJUSTING	3			1.075MM	0.001	0.0022
110	15841-98580	WASHER ADJUSTING	3			1.100MM	0.001	0.0022
110	15841-98590	WASHER ADJUSTING	3			1.125MM	0.001	0.0022
110	15841-98600	WASHER ADJUSTING	3			1.150MM	0.001	0.0022
110	15841-98610	WASHER ADJUSTING	3			1.175MM	0.001	0.0022
110	15841-98620	WASHER ADJUSTING	3			1.200MM	0.001	0.0022
110	15841-98630	WASHER ADJUSTING	3			1.225MM	0.001	0.0022
110	15841-98640	WASHER ADJUSTING	3			1.250MM	0.001	0.0022
110	15841-98650	WASHER ADJUSTING	3			1.275MM	0.001	0.0022
110	15841-98660	WASHER ADJUSTING	3			1.300MM	0.001	0.0022
110	15841-98670	WASHER ADJUSTING	3			1.325MM	0.001	0.0022
110	15841-98680	WASHER ADJUSTING	3			1.350MM	0.001	0.0022
110	15841-98690	WASHER ADJUSTING	3			1.375MM	0.001	0.0022
110	15841-98700	WASHER ADJUSTING	3			1.400MM	0.001	0.0022
110	15841-98710	WASHER ADJUSTING	3			1.425MM	0.001	0.0022
110	15841-98720	WASHER ADJUSTING	3			1.450MM	0.001	0.0022
110	15841-98730	WASHER ADJUSTING	3			1.475MM	0.001	0.0022
110	15841-98740	WASHER ADJUSTING	3			1.500MM	0.001	0.0022
110	15841-98750	WASHER ADJUSTING	3			1.525MM	0.001	0.0022
110	15841-98760	WASHER ADJUSTING	3			1.550MM	0.001	0.0022
110	15841-98770	WASHER ADJUSTING	3			1.575MM	0.001	0.0022
110	15841-98780	WASHER ADJUSTING	3			1.600MM	0.002	0.0044
110	15841-98790	WASHER ADJUSTING	3			1.625MM	0.001	0.0022
110	15841-98800	WASHER ADJUSTING	3			1.650MM	0.001	0.0022
110	15841-98810	WASHER ADJUSTING	3			1.675MM	0.004	0.0088
110	15841-98820	WASHER ADJUSTING	3			1.700MM	0.001	0.0022
110	15841-98830	WASHER ADJUSTING	3			1.725MM	0.001	0.0022
110	15841-98840	WASHER ADJUSTING	3			1.750MM	0.001	0.0022
110	15841-98850	WASHER ADJUSTING	3			1.775MM	0.001	0.0022
110	15841-98860	WASHER ADJUSTING	3			1.800MM	0.001	0.0022
110	15841-98870	WASHER ADJUSTING	3			1.825MM	0.001	0.0022
110	15841-98880	WASHER ADJUSTING	3			1.850MM	0.001	0.0022
110	15841-98890	WASHER ADJUSTING	3			1.875MM	0.001	0.0022
110	15841-98900	WASHER ADJUSTING	3			1.900MM	0.001	0.0022
110	15841-98910	WASHER ADJUSTING	3			1.925MM	0.001	0.0022
110	15841-98920	WASHER ADJUSTING	3			1.950MM	0.001	0.0022
120	15841-53622	GASKET	3				0.002	0.0044
130	19077-53650	SEAL HEAT	3				0.005	0.011

silverthorn.co.uk

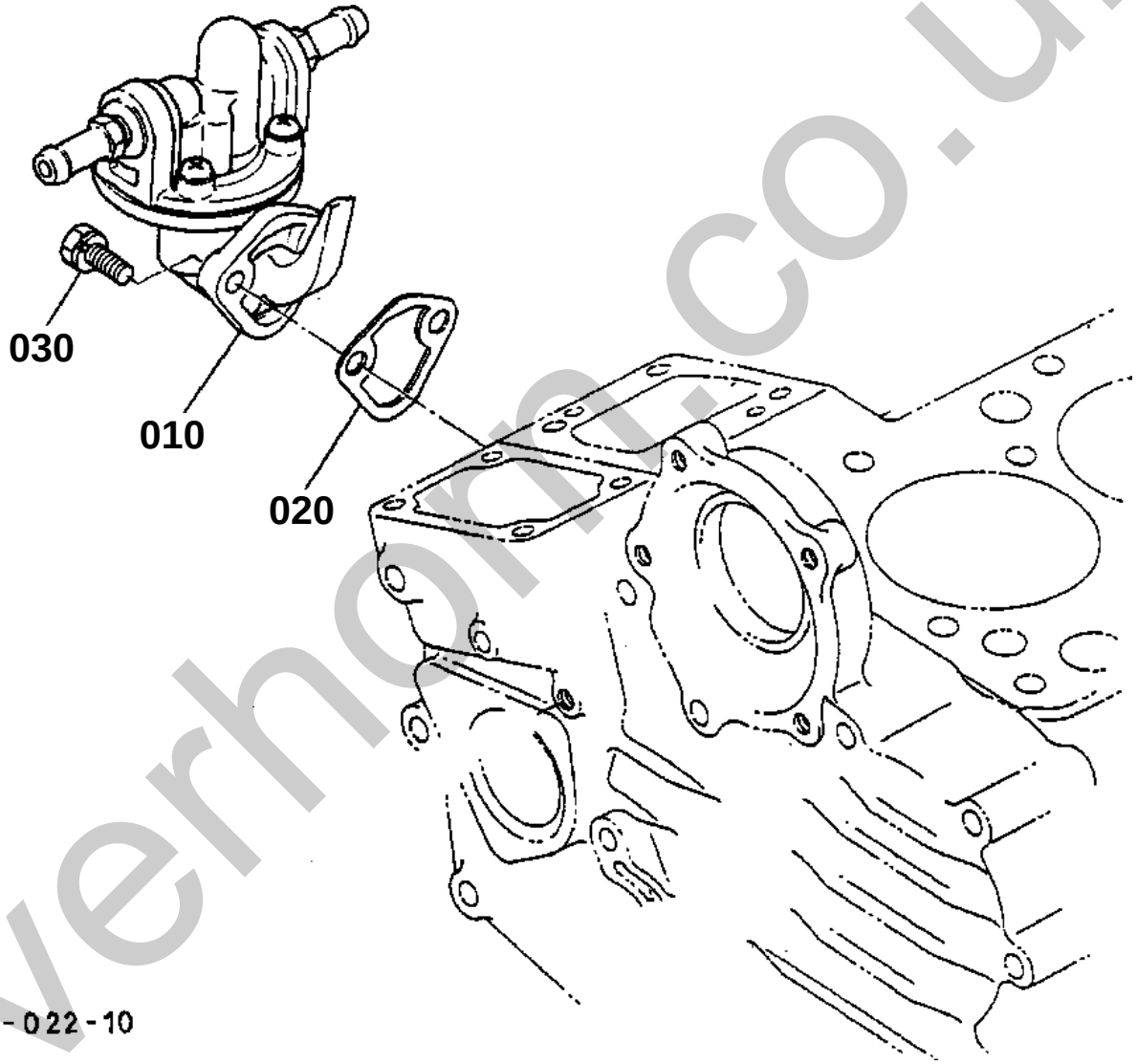

silverhorn.co.uk

FUEL PUMP(MECHANICAL)

↔ Interchangeable; ≠ not interchangeable; ← new for old; → old for new

REF.No	Part No.	Description	Q'ty	S.No.	I/C	REMARKS	Weight (kgf)	Weight (lb)
010	15821-52030	ASSY PUMP FUEL	1				0.169	0.3718
020	16264-52140	GASKET FUEL PUMP	1				0.001	0.0022
030	01023-50616	BOLT	2				0.005	0.011

silverhorn.co.uk

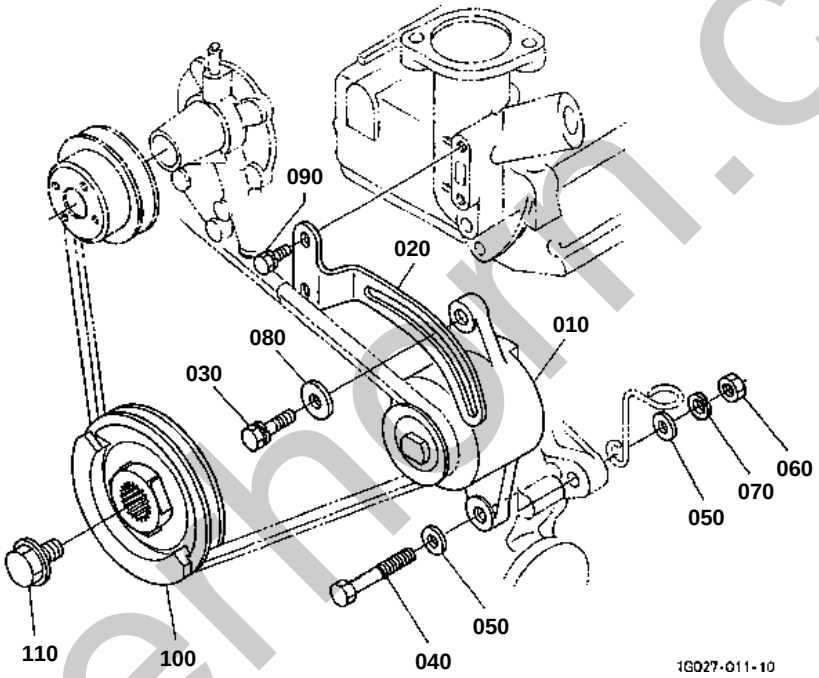

silverhorn.co.uk

DYNAMO AND PULLEY

↔ Interchangeable; ≠ not interchangeable; ← new for old; → old for new

REF.No	Part No.	Description	Q'ty	S.No.	I/C	REMARKS	Weight (kgf)	Weight (lb)
010	6C040-59250	ASSY DYNAMO	1			REFER TO L.No.C13-L FOR COMPONENTS.	1.33	2.926
020	12599-64420	STAY DYNAMO	1				0.1	0.22
030	01123-50830	BOLT	1				0.015	0.033
040	01125-50855	BOLT	1				0.025	0.055
050	04013-60080	WASHER PLAIN	2				0.002	0.0044
060	02114-50080	NUT	1				0.005	0.011
070	04512-50080	WASHER SPRING	1				0.001	0.0022
080	04015-60080	WASHER PLAIN	1				0.01	0.022
090	01023-50616	BOLT	2				0.005	0.011
100	16875-74280	PULLEY FAN DRIVE	1				0.825	1.815
110	15881-91030	BOLT	1				0.06	0.132

silverhorn.co.uk

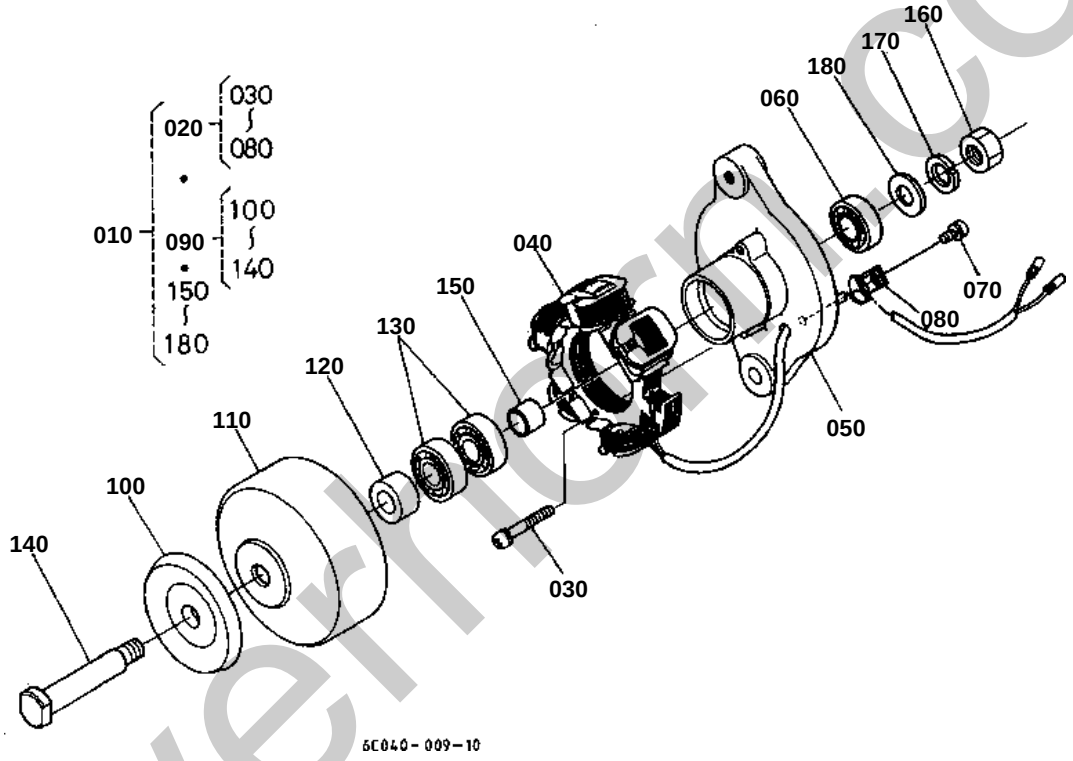

silverhorse.co.uk

DYNAMO [COMPONENT PARTS]

↔ Interchangeable; ≠ not interchangeable; ← new for old; → old for new

REF.No	Part No.	Description	Q'ty	S.No.	I/C	REMARKS	Weight (kgf)	Weight (lb)
010	6C040-59250	ASSY DYNAMO	1				1.33	2.926
020	6C040-59260	COMP.STATOR	1				0.55	1.21
030	15261-93010	SCREW ROUND HEAD	2				0.003	0.0066
040	15531-64292	STATOR	1				0.29	0.638
050	6C040-82880	PLATE	1				0.267	0.5874
060	15531-74180	BEARING BALL	1				0.04	0.088
070	15531-93010	SCREW ROUND HEAD	1				0.002	0.0044
080	15531-64190	CLAMP CORD	1				0.005	0.011
090	6C040-59270	COMP.FLYWHEEL	1				0.75	1.65
100	15531-64110	PULLEY	1				0.15	0.33
110	6C040-82850	FLYWHEEL DYNAMO	1				0.48	1.056
120	6C040-82860	COLLAR	1				0.014	0.0308
130	15531-74180	BEARING BALL	2				0.04	0.088
140	6C040-82870	SHAFT	1				0.075	0.165
150	15261-64150	COLLAR	1				0.02	0.044
160	15261-92030	NUT	1				0.01	0.022
170	15261-94070	WASHER SPRING	1				0.003	0.0066
180	15261-94020	WASHER PLAIN	1				0.007	0.0154

silverhorn.co.uk

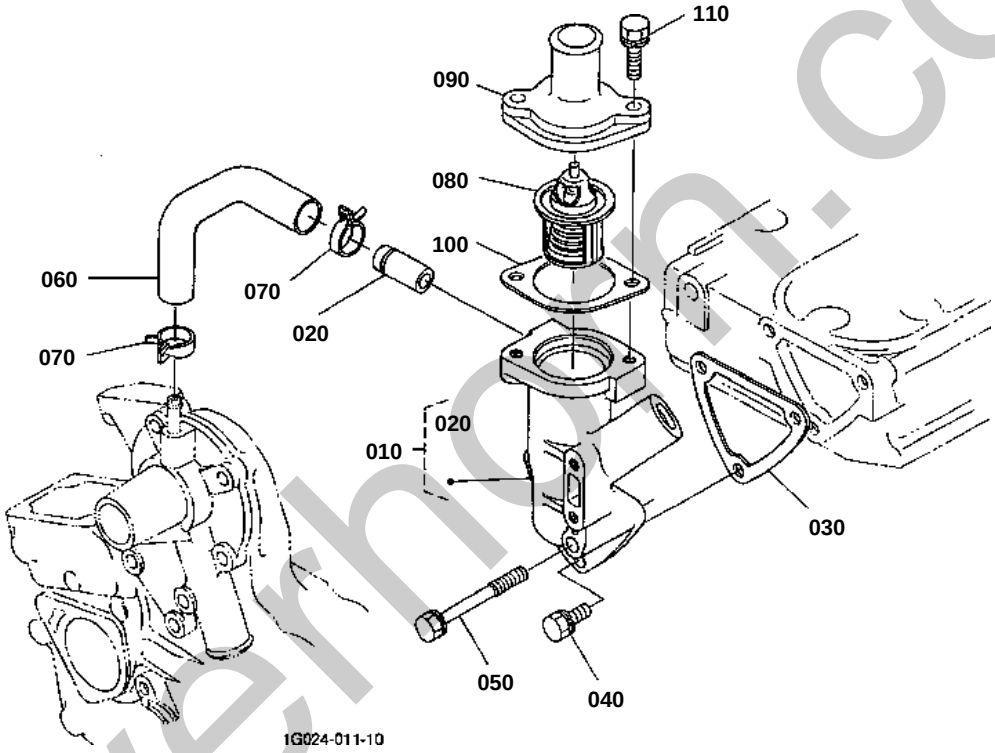

silverhorn.co.uk

WATER FLANGE AND THERMOSTAT

↔ Interchangeable; ≠ not interchangeable; ← new for old; → old for new

REF.No	Part No.	Description	Q'ty	S.No.	I/C	REMARKS	Weight (kgf)	Weight (lb)
010	16851-72704	COMP.FLANGE WATER	1				0.21	0.462
020	16241-73370	PIPE WATER RETURN	1				0.007	0.0154
030	15841-72922	GASKET WATER FLANGE	1				0.001	0.0022
040	01023-50616	BOLT	2				0.005	0.011
050	01023-60650	BOLT	1				0.015	0.033
060	16851-73350	PIPE WATER RETURN	1				0.15	0.33
070	16241-73360	BAND PIPE	2				0.003	0.0066
080	15531-73010	ASSY THERMOSTAT	1				0.07	0.154
090	15841-73260	COVER THERMOSTAT	1				0.04	0.088
100	16851-73270	GASKET THERMOSTAT	1				0.003	0.0066
110	01023-50622	BOLT	2				0.005	0.011

silverhorn.co.uk

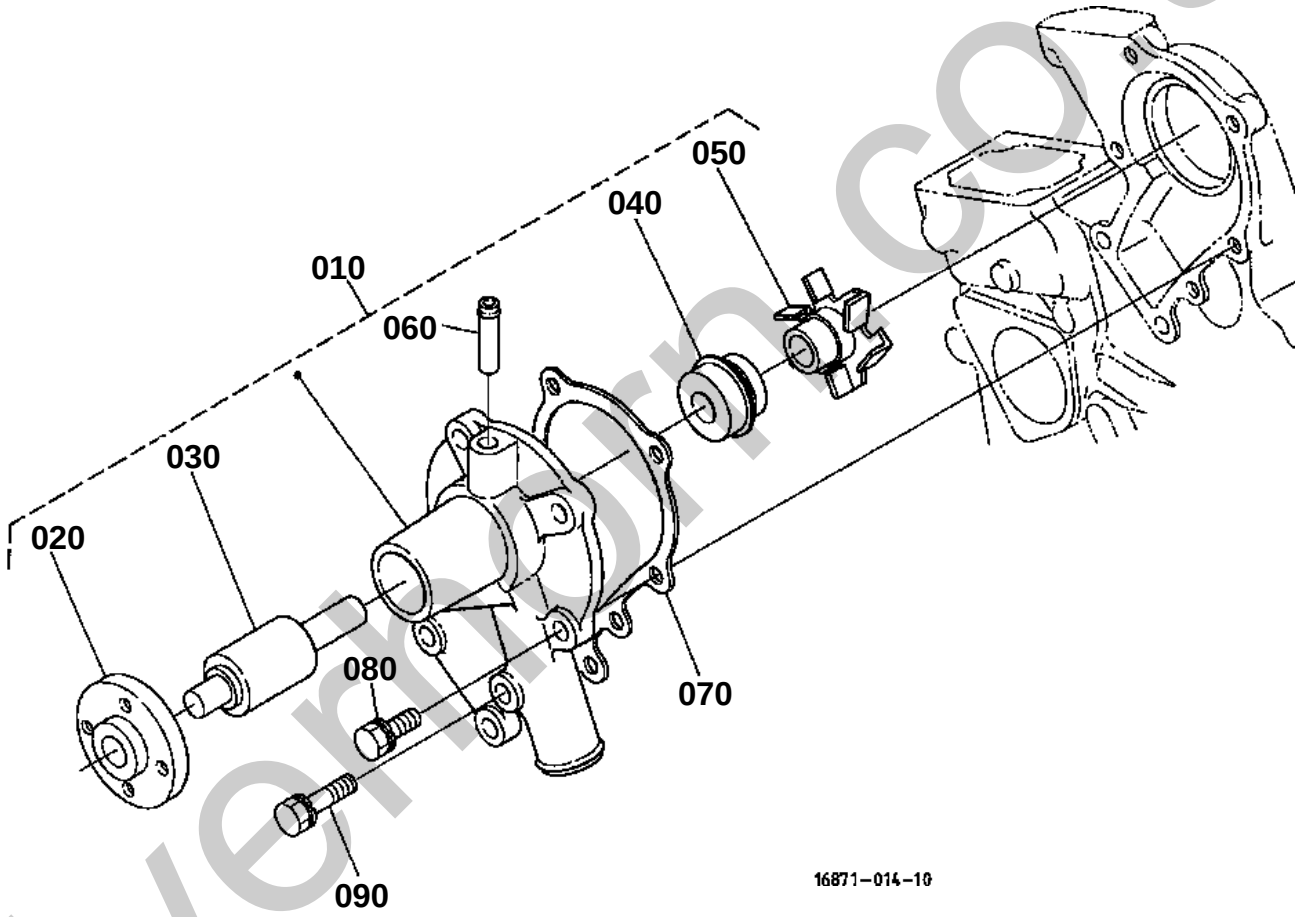

silvermorn.co.uk

WATER PUMP

↔ Interchangeable; ≠ not interchangeable; ← new for old; → old for new

REF.No	Part No.	Description	Q'ty	S.No.	I/C	REMARKS	Weight (kgf)	Weight (lb)
010	19883-73030	ASSY PUMP WATER	1				0.65	1.43
020	15852-73520	FLANGE WATER PUMP	1				0.13	0.286
030	15852-73550	BEARING	1				0.18	0.396
040	15481-73050	ASSY SEAL MECHANICAL	1				0.02	0.044
050	19883-73510	IMPELLER WATER PUMP	1				0.05	0.11
060	15852-73340	PIPE WATER RETURN	1				0.02	0.044
070	15881-73432	GASKET WATER PUMP NA	1				0.002	0.0044
080	01023-50622	BOLT	4				0.005	0.011
090	01023-50638	BOLT	1				0.01	0.022

silverhorn.co.uk

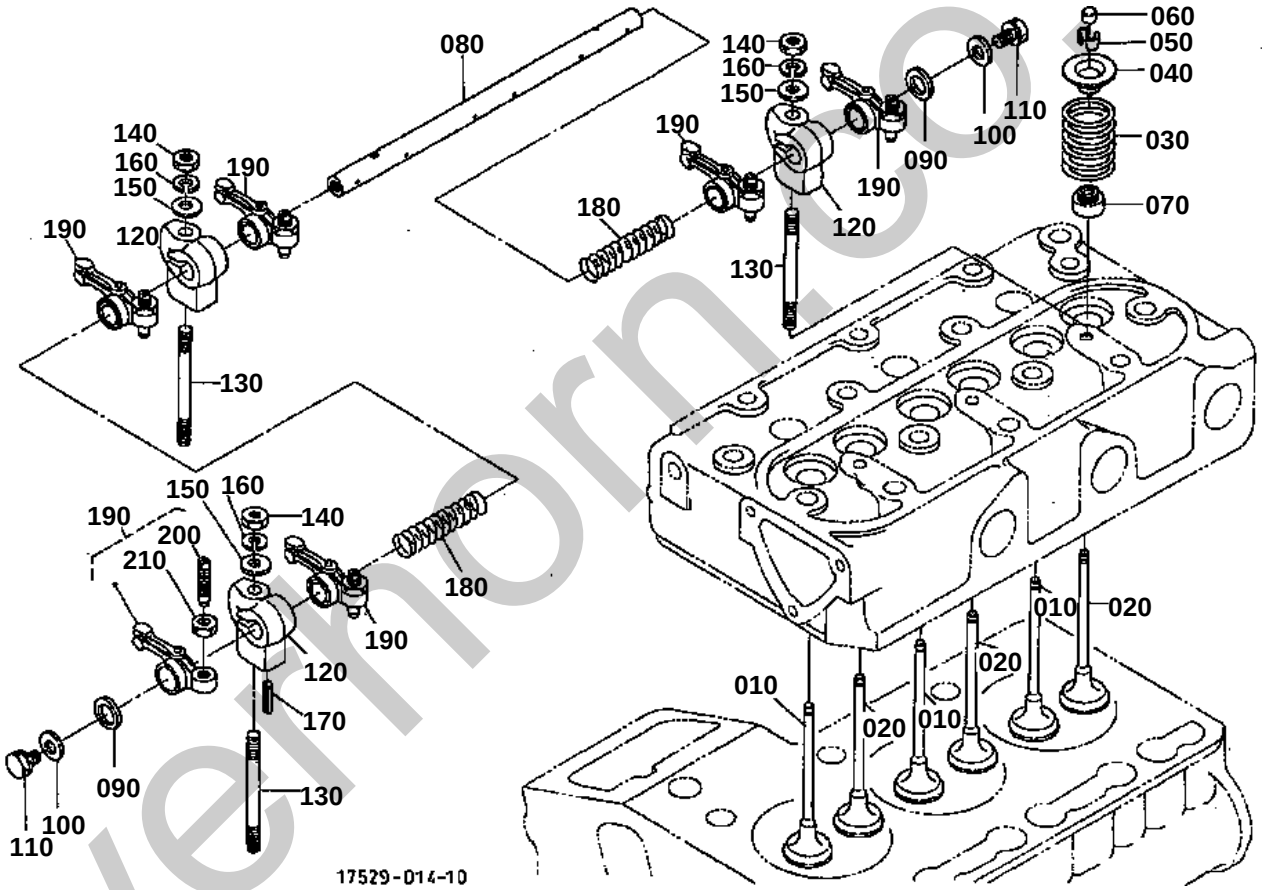

silvermorn.co.uk

VALVE AND ROCKER ARM

↔ Interchangeable; ≠ not interchangeable; ← new for old; → old for new

REF.No	Part No.	Description	Q'ty	S.No.	I/C	REMARKS	Weight (kgf)	Weight (lb)
010	14601-13110	VALVE INLET	3				0.03	0.066
020	14601-13120	VALVE EXHAUST	3				0.028	0.0616
030	14601-13240	SPRING VALVE	6				0.015	0.033
040	14601-13330	RETAINER SPRING	6				0.01	0.022
050	14601-13360	COLLET VALVE SPRING	6			SET	0.001	0.0022
060	16851-13280	CAP VALVE	6				0.005	0.011
070	11420-13150	SEAL VALVE STEM	6				0.001	0.0022
080	15861-14263	SHAFT ROCKER ARM	1				0.094	0.2068
090	16871-14430	WASHER	2				0.002	0.0044
100	15841-94022	WASHER PLAIN	2				0.005	0.011
110	01023-50610	BOLT	2				0.005	0.011
120	15841-14350	BRACKET ROCKER ARM	3				0.026	0.0572
130	14601-14410	STUD	3				0.015	0.033
140	02056-50060	NUT	3				0.002	0.0044
150	04012-50060	WASHER PLAIN	3				0.001	0.0022
160	04512-60060	WASHER SPRING	3				0.001	0.0022
170	05411-00420	PIN SPRING	1				0.001	0.0022
180	14601-14310	SPRING ROCKER ARM	2				0.005	0.011
190	15841-14030	ASSY ROCKER ARM	6				0.04	0.088
200	15841-14230	SCREW ADJUSTING	6				0.003	0.0066
210	14601-14240	NUT	6				0.007	0.0154

silverhorn.co.uk

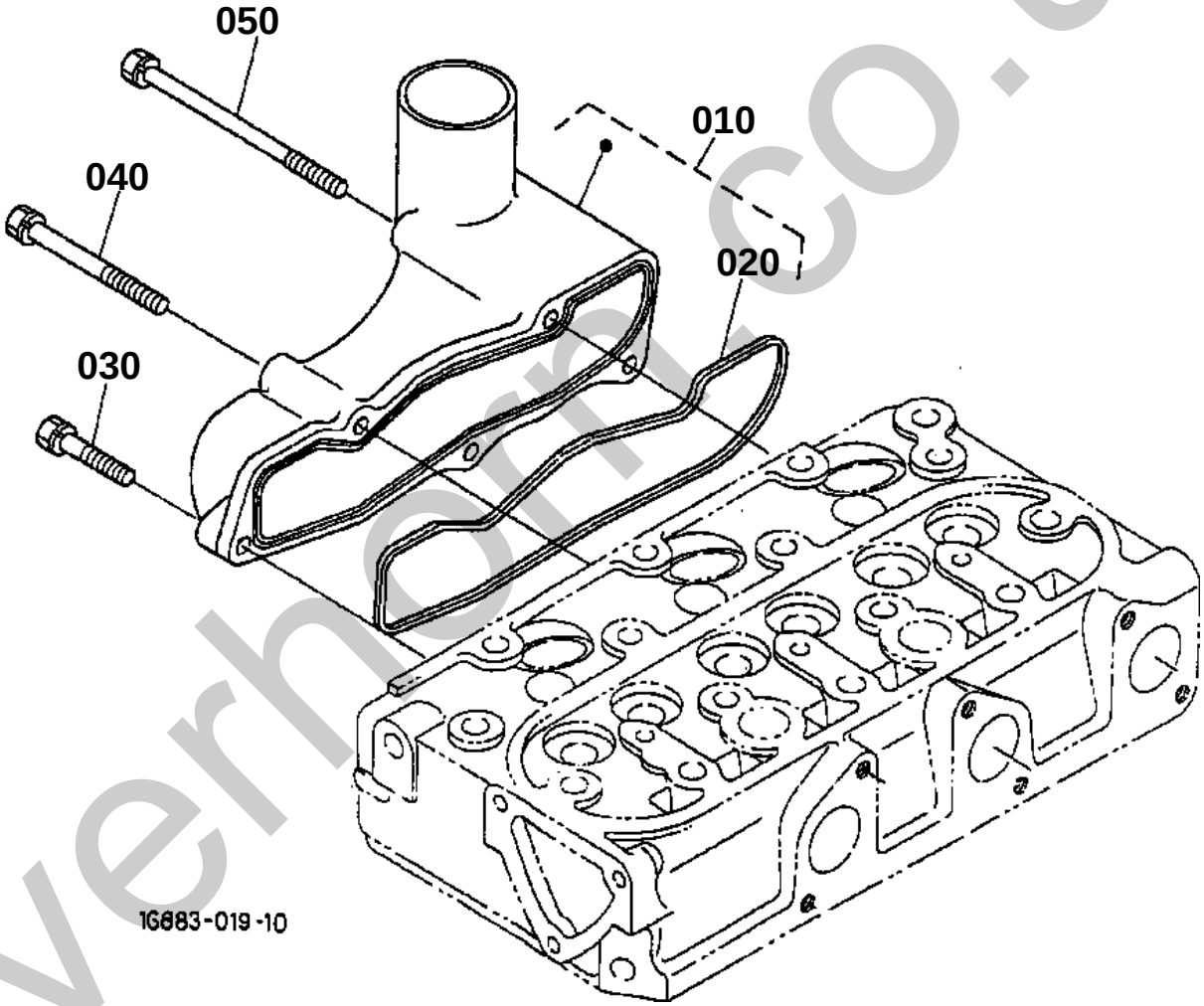

silverhorn.co.uk

INLET MANIFOLD

↔ Interchangeable; ≠ not interchangeable; ← new for old; → old for new

REF.No	Part No.	Description	Q'ty	S.No.	I/C	REMARKS	Weight (kgf)	Weight (lb)
010	15862-11770	ASSY MANIFOLD INLET	1				0.35	0.77
020	15861-11820	GASKET IN-MANIFOLD	1				0.001	0.0022
030	01023-50625	BOLT	2				0.007	0.0154
040	01023-60650	BOLT	2				0.015	0.033
050	15862-91010	BOLT	1				0.02	0.044

silverhorn.co.uk

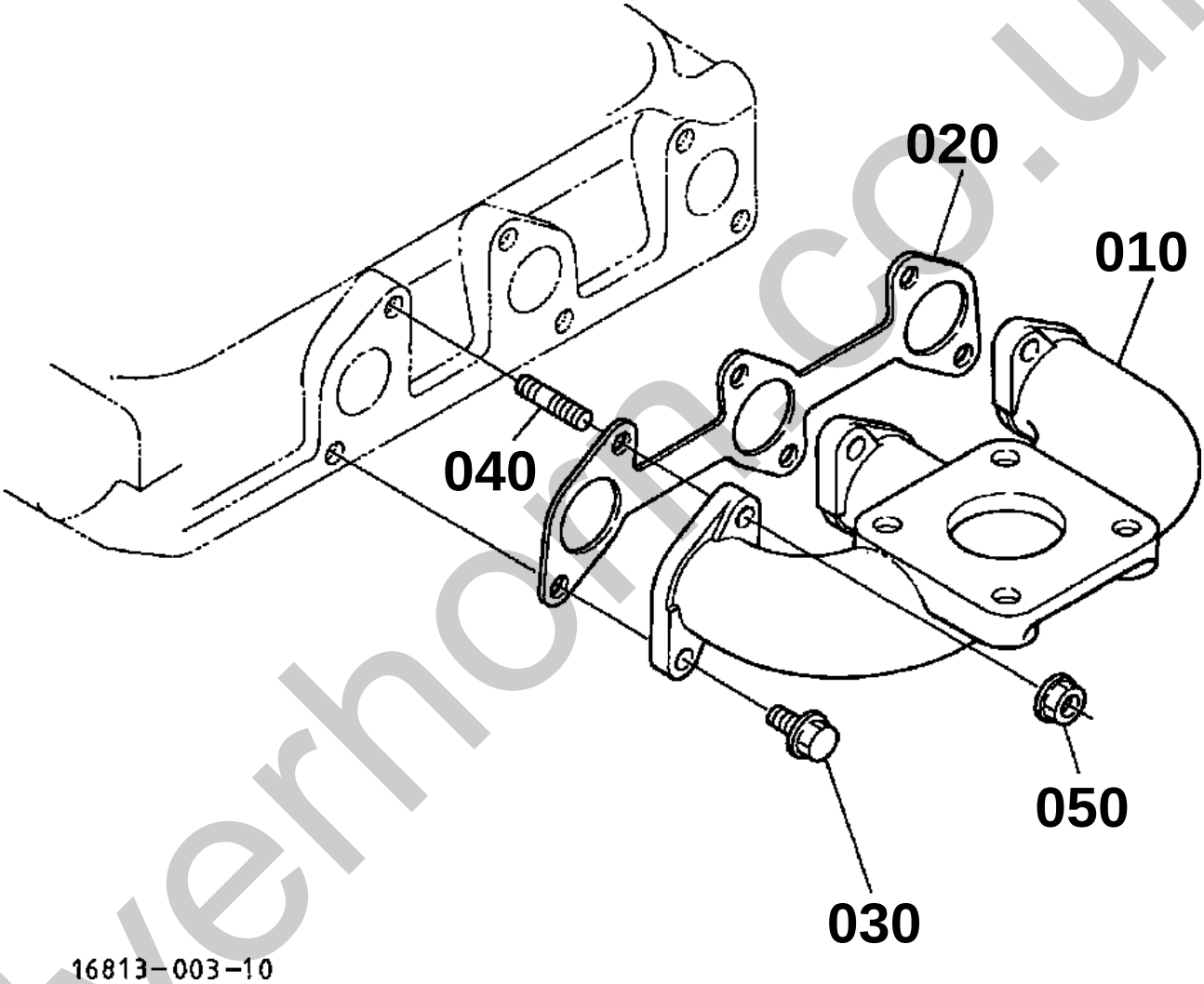

silverhorn.co.uk

EXHAUST MANIFOLD

↔ Interchangeable; ≠ not interchangeable; ← new for old; → old for new

REF.No	Part No.	Description	Q'ty	S.No.	I/C	REMARKS	Weight (kgf)	Weight (lb)
010	16813-12310	MANIFOLD EXHAUST	1				1.06	2.332
020	15862-12350	GASKET	1				0.01	0.022
030	01759-50616	BOLT UBS	3				0.01	0.022
040	01513-50618	STUD	3				0.005	0.011
050	02756-50060	NUT UBS	3				0.001	0.0022

silverhorn.co.uk

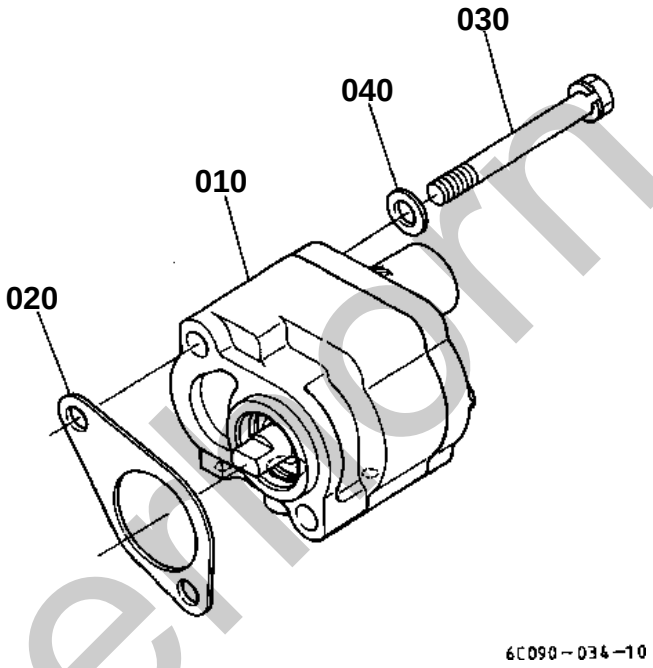

silverthorn.co.uk

HYDRAULIC PUMP

↔ Interchangeable; ≠ not interchangeable; ← new for old; → old for new

REF.No	Part No.	Description	Q'ty	S.No.	I/C	REMARKS	Weight (kgf)	Weight (lb)
010	6C090-36300	ASSY PUMP HYDRAULIC	1			REFER TO L.No.D01-R FOR COMPONENTS.	1.2	2.64
020	15841-83112	GASKET	1				0.002	0.0044
030	01123-50880	BOLT	2				0.03	0.066
040	04013-60080	WASHER PLAIN	2				0.002	0.0044

silverhorn.co.uk

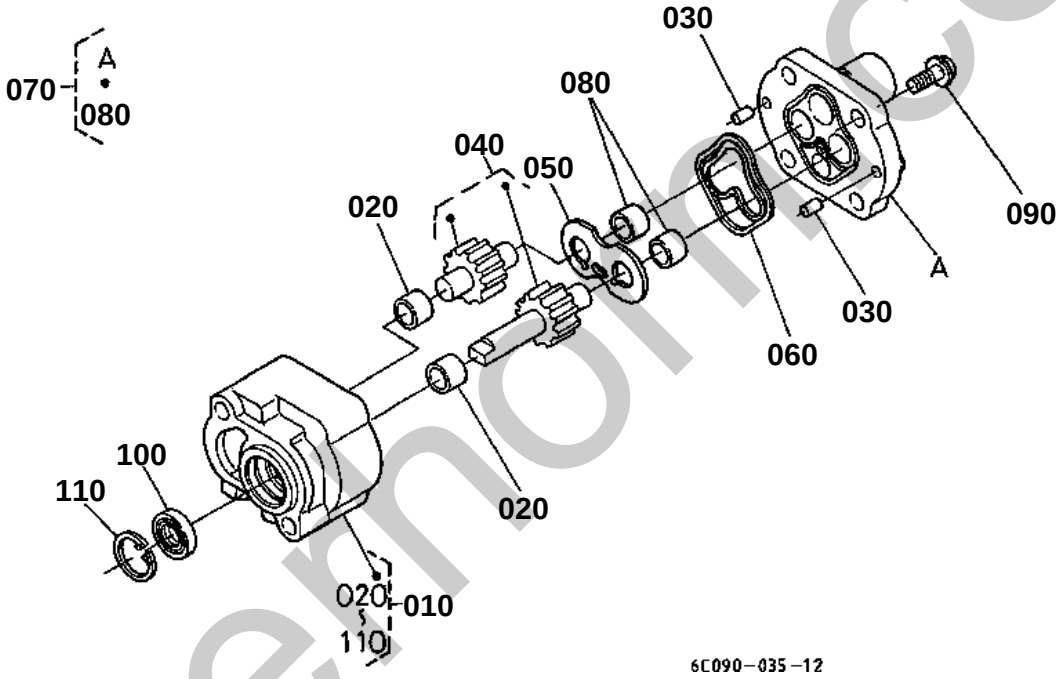

silvermom.co.uk

HYDRAULIC PUMP [COMPONENT PARTS]

↔ Interchangeable; ≠ not interchangeable; ← new for old; → old for new

REF.No	Part No.	Description	Q'ty	S.No.	I/C	REMARKS	Weight (kgf)	Weight (lb)
010	6C090-36300	ASSY PUMP HYDRAULIC	1				1.2	2.64
020	6A100-37230	BUSH	2				0.005	0.011
030	05012-00814	PIN STRAIGHT	2				0.006	0.0132
040	6C090-37202	COMP.GEAR HYD.PUMP	1				0.3	0.66
060	6C040-36342	RING DOUBLE	1				0.003	0.0066
080	6A100-37230	BUSH	2				0.005	0.011
090	01754-51030	BOLT FLANGE	2				0.03	0.066
100	31381-76390	SEAL OIL	1				0.01	0.022
110	04611-00300	CIR CLIP INTERNAL	1				0.004	0.0088

silverhorn.co.uk

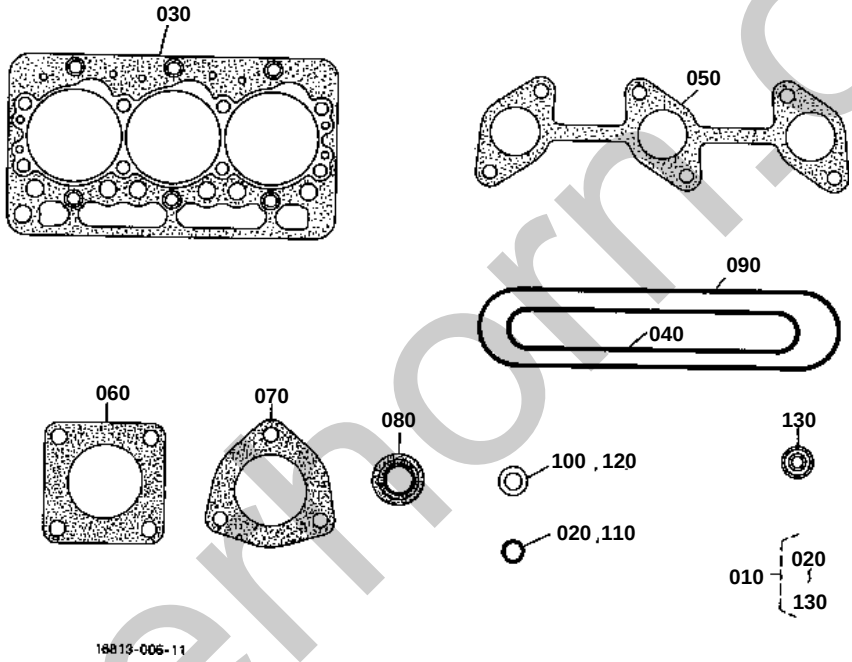

silvermorn.co.uk

UPPER GASKET KIT

↔ Interchangeable; ≠ not interchangeable; ← new for old; → old for new

REF.No	Part No.	Description	Q'ty	S.No.	I/C	REMARKS	Weight (kgf)	Weight (lb)
010	07916-29477	KIT GASKET UPPER	1				0	0
020	15221-33700	O RING	1				0.001	0.0022
030	16871-03310	GASKET CYLINDER HEAD	1				0.083	0.1826
040	15861-11820	GASKET IN-MANIFOLD	1				0.001	0.0022
050	15862-12350	GASKET EX-MANIFOLD	1				0.01	0.022
060	15263-12370	GASKET MUFFLER NA	1				0.015	0.033
070	15862-12230	GASKET MUFFLER NA	1			OUT OF USE	0.015	0.033
080	11420-13150	SEAL VALVE STEM	6				0.001	0.0022
090	16861-14522	GASKET HEAD COVER	1				0.02	0.044
100	15601-96650	GASKET	4				0.001	0.0022
110	04814-50300	O RING	1				0.001	0.0022
120	15841-53622	GASKET	3				0.002	0.0044
130	19077-53650	SEAL HEAT	3				0.005	0.011

silverhorn.co.uk

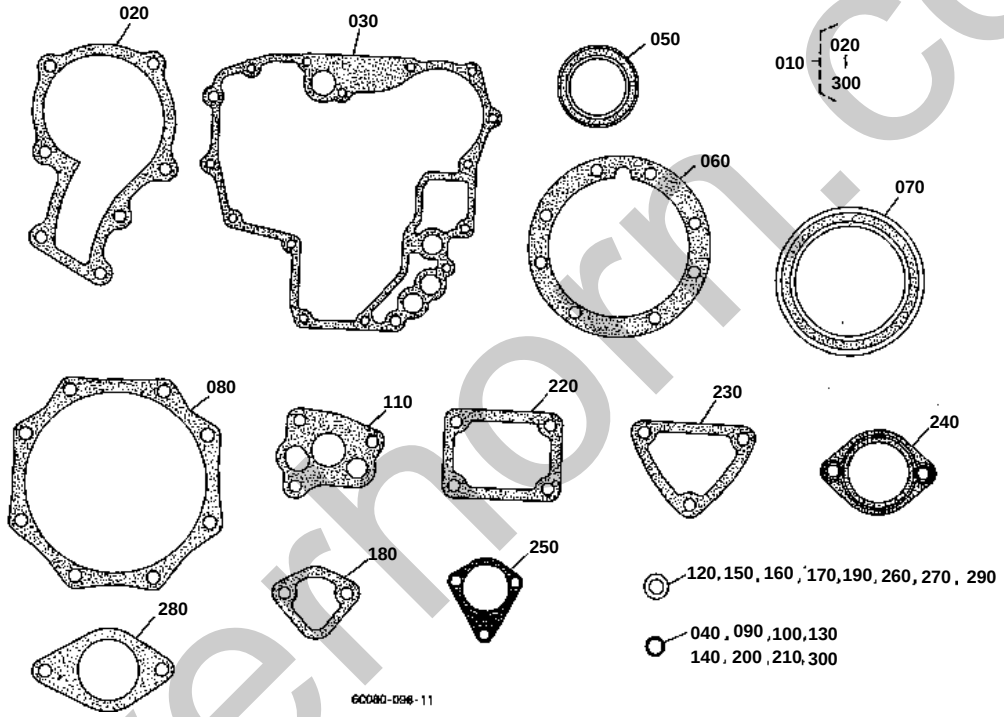

silvermoor.co.uk

LOWER GASKET KIT

↔ Interchangeable; ≠ not interchangeable; ← new for old; → old for new

REF.No	Part No.	Description	Q'ty	S.No.	I/C	REMARKS	Weight (kgf)	Weight (lb)
010	07916-28697	KIT GASKET LOWER	1				0	0
020	15881-73432	GASKET WATER PUMP NA	1				0.002	0.0044
030	15862-04132	GASKET GEAR CASE NA	1				0.007	0.0154
040	04814-06130	O RING	3				0.01	0.022
050	15841-04140	SEAL OIL	1				0.012	0.0264
060	15852-04360	GASKET BRG.CASE	1				0.005	0.011
070	09560-00007	SEAL OIL	1				0.029	0.0638
080	15841-04822	GASKET	1				0.004	0.0088
090	04814-16220	O RING	1				0.001	0.0022
100	04814-00160	O RING	1				0.001	0.0022
110	16851-35152	GASKET OIL PUMP NA	1				0.001	0.0022
120	15601-96650	GASKET	5				0.001	0.0022
130	15841-96760	O RING	3				0.001	0.0022
140	15841-51200	O RING	6				0.001	0.0022
150	15841-96650	GASKET	2				0.001	0.0022
160	15841-96660	GASKET	1				0.001	0.0022
170	15861-96650	GASKET	1				0.001	0.0022
180	16264-52140	GASKET FUEL PUMP	1				0.001	0.0022
190	15021-33660	GASKET	2				0.001	0.0022
200	04814-10160	O RING	1				0.001	0.0022
210	04814-10070	O RING	1				0.001	0.0022
220	15841-57212	GASKET CONTROL PLATE	1				0.001	0.0022
230	15841-72922	GASKET WATER FLANGE	1				0.001	0.0022
240	16851-73270	GASKET	1				0.003	0.0066
250	19461-88132	GASKET H/M GEAR CASE	1				0.002	0.0044
260	6C090-58960	GASKET	1				0.002	0.0044
270	04714-00300	GASKET	1			OUT OF USE	0.002	0.0044
280	15841-83112	GASKET	1				0.002	0.0044
290	04714-00200	GASKET	1			OUT OF USE	0.002	0.0044
300	04814-00090	O RING	1			OUT OF USE	0.001	0.0022

silverhorn.co.uk

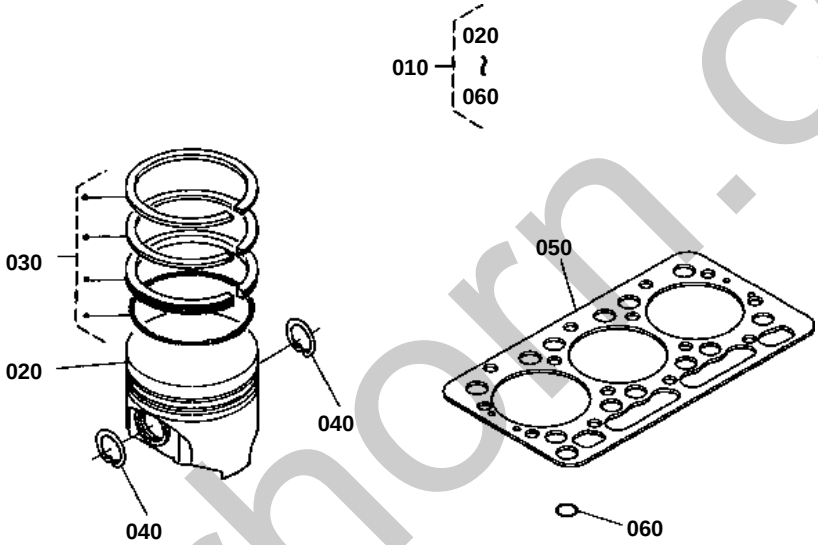

1G027-013-10

silverhorn.co.uk

PISTON KIT [OPTION]

↔ Interchangeable; ≠ not interchangeable; ← new for old; → old for new

REF.No	Part No.	Description	Q'ty	S.No.	I/C	REMARKS	Weight (kgf)	Weight (lb)
010	16873-21000	KIT PISTON	3				1.1	2.42
020	16851-21112	PISTON	3				0.23	0.506
030	16853-21050	ASSY PISTON RING	3				0.04	0.088
040	15261-21330	CIR CLIP PISTON PIN	6				0.001	0.0022
050	16871-03310	GASKET CYLINDER HEAD	1				0.083	0.1826
060	15221-33700	O RING	1				0.001	0.0022

silverhorn.co.uk

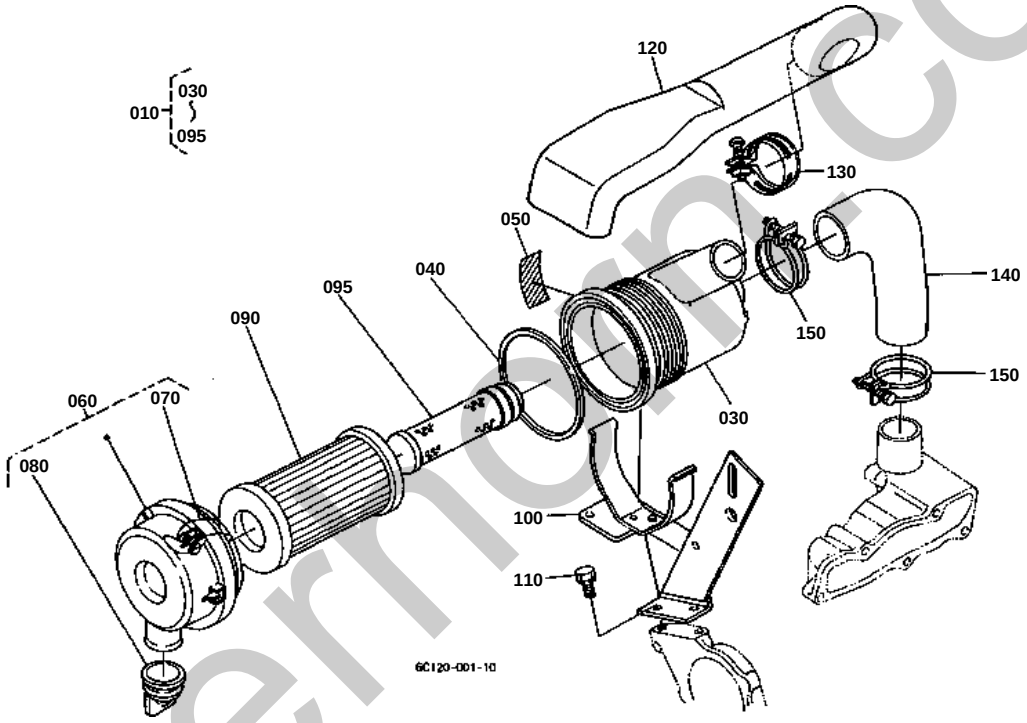

silvermoon.co.uk

AIR CLEANER

↔ Interchangeable; ≠ not interchangeable; ← new for old; → old for new

REF.No	Part No.	Description	Q'ty	S.No.	I/C	REMARKS	Weight (kgf)	Weight (lb)
010	6C095-58200	ASSY CLEANER AIR	1				0.66	1.452
030	6A100-82520	BODY AIR CLEANER	1				0.23	0.506
040	6A100-82530	GASKET	1				0.03	0.066
050	32721-58282	LABEL CAUTION	1				0.001	0.0022
060	6A100-82550	ASSY COVER A/C	1				0.179	0.3938
070	6A100-82570	SPRING	2				0.005	0.011
080	67980-82580	VALVE UNLOADER	1				0.011	0.0242
090	6A100-82630	ASSY ELEMENT	1				0.24	0.528
095	32721-58242	ELEMENT INNER	1				0.2	0.44
100	6C090-58230	BRACKET AIR CLEANER	1				0.67	1.474
110	01023-50616	BOLT	2				0.005	0.011
120	6C090-58250	HOSE INLET	1				0.13	0.286
130	15261-11720	BAND PIPE	1				0.03	0.066
140	6C090-58260	HOSE INLET	1				0.15	0.33
150	67955-58260	BAND AIR CLEANER	2				0.028	0.0616

silverhorn.co.uk

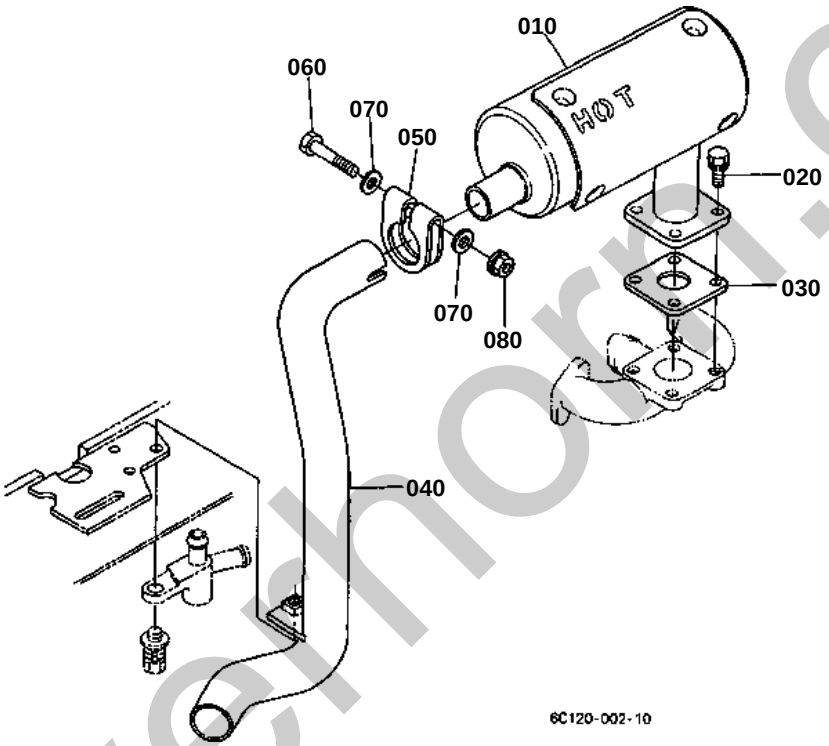

silverhorn.co.uk

MUFFLER

↔ Interchangeable; ≠ not interchangeable; ← new for old; → old for new

REF.No	Part No.	Description	Q'ty	S.No.	I/C	REMARKS	Weight (kgf)	Weight (lb)
010	6C090-58400	COMP.MUFFLER	1				2.1	4.62
020	01123-50820	BOLT	4				0.011	0.0242
030	15263-12370	GASKET MUFFLER NA	1				0.015	0.033
040	6C120-58420	PIPE EXHAUST	1				0.51	1.122
050	15221-12433	CLAMP MUFFLER PIPE	1				0.05	0.11
060	01153-50865	BOLT	1				0.025	0.055
070	04013-60080	WASHER PLAIN	2				0.002	0.0044
080	02121-50080	NUT	1				0.01	0.022

silverhorn.co.uk

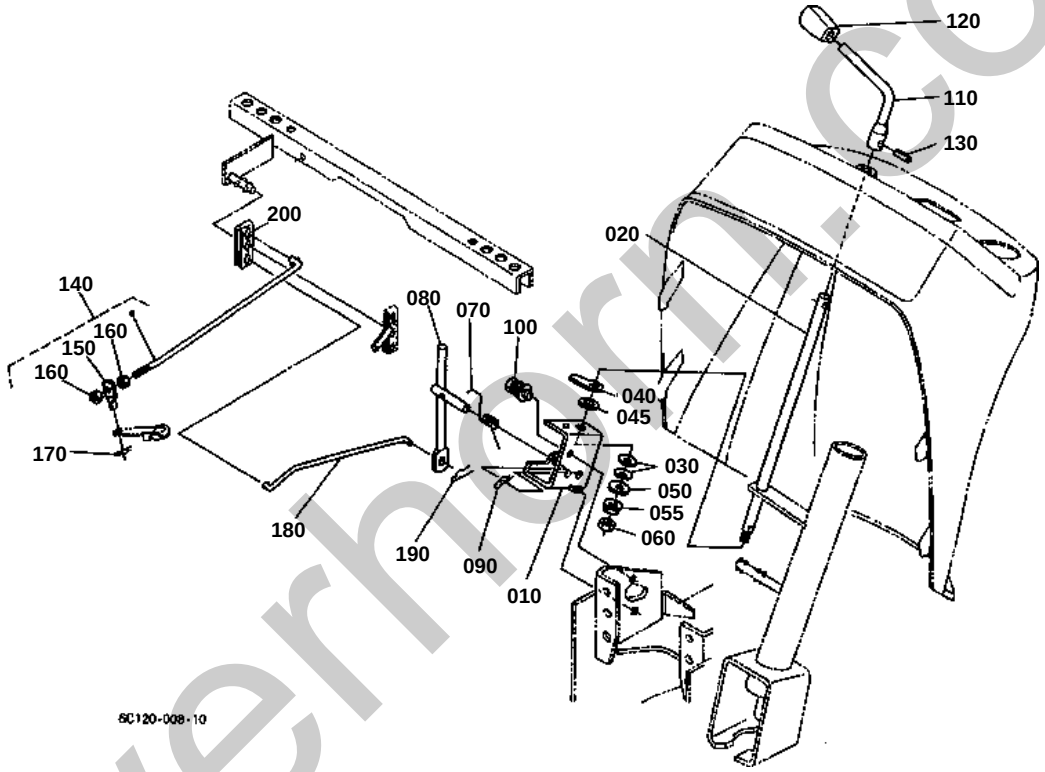

silverhorn.co.uk

ACCELERATOR LEVER [HST TYPE]

↔ Interchangeable; ≠ not interchangeable; ← new for old; → old for new

REF.No	Part No.	Description	Q'ty	S.No.	I/C	REMARKS	Weight (kgf)	Weight (lb)
010	6C040-43212	BRACKET ACCEL.	1				0.163	0.3586
020	6C040-43220	ROD ACCEL.	1				0.35	0.77
030	66116-51530	SPRING PLATE	2				0.004	0.0088
040	6C040-43250	ARM ACCELERATOR	1				0.04	0.088
045	6C040-43380	WASHER ACCEL.	1				0.004	0.0088
050	04015-60080	WASHER PLAIN	1				0.01	0.022
055	02751-50080	NUT FLANGE	1				0.006	0.0132
060	02156-50080	NUT	1				0.004	0.0088
070	6C040-43290	SPRING	1				0.005	0.011
080	6C050-43230	LINK ACCEL.	1				0.135	0.297
090	05525-61000	PIN SNAP	1				0.002	0.0044
100	01125-60820	BOLT	1				0.015	0.033
110	6C040-43244	LEVER ACCEL.	1				0.115	0.253
120	TA040-49873	GRIP	1				0.024	0.0528
130	05411-00520	PIN SPRING	1				0.002	0.0044
140	6C090-43300	ASSY ROD RELEASE	1				0.07	0.154
150	6C090-43280	CONNECTOR	1				0.004	0.0088
160	02014-50060	NUT	2				0.003	0.0066
170	05525-50800	PIN SNAP	1				0.001	0.0022
180	6C090-43240	ROD RELEASE	1				0.04	0.088
190	05525-60600	PIN SNAP	2				0.001	0.0022
200	6C090-43250	LEVER RELEASE	1				0.05	0.11

silverhorn.co.uk

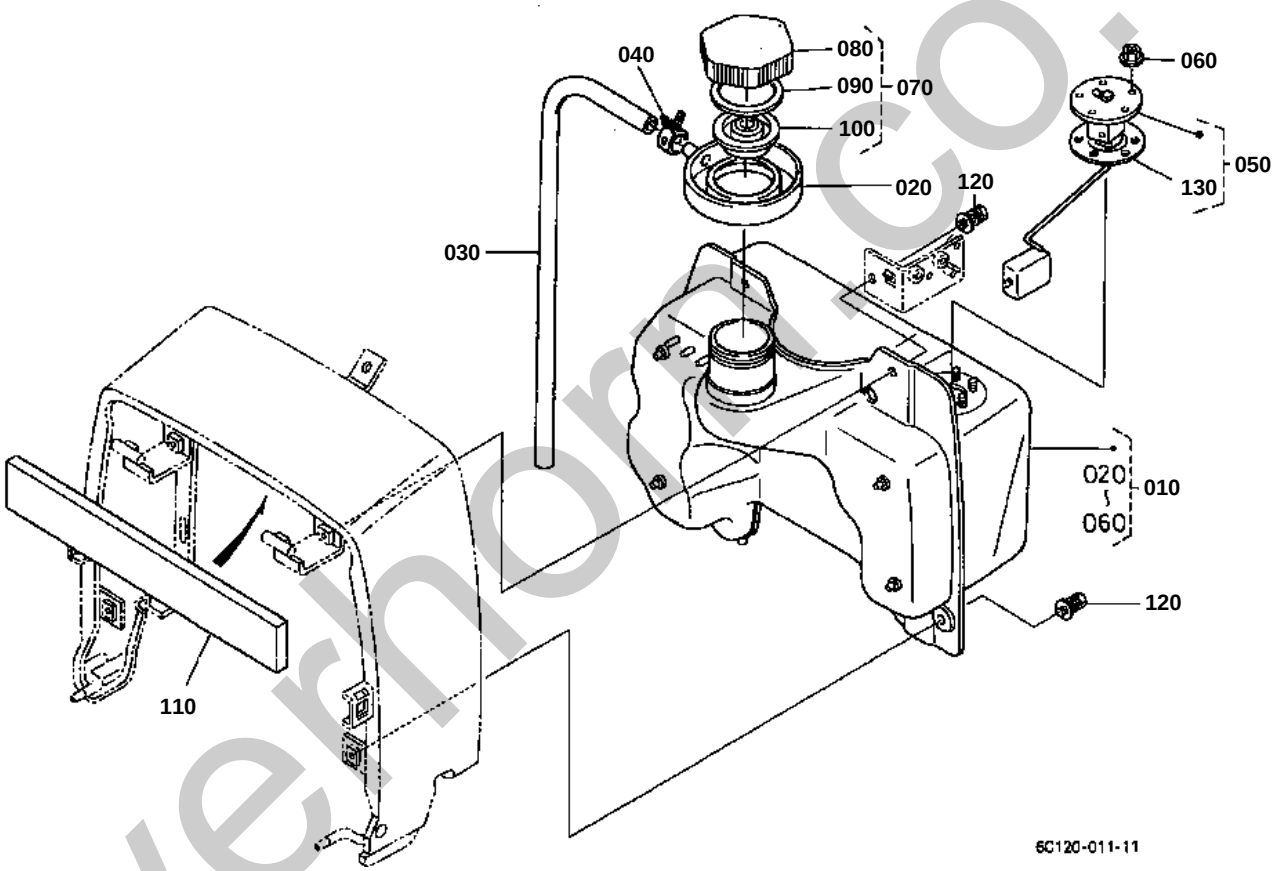

silverhorn.co.uk

050 6C090-5475-0
130 6A320-8581-0

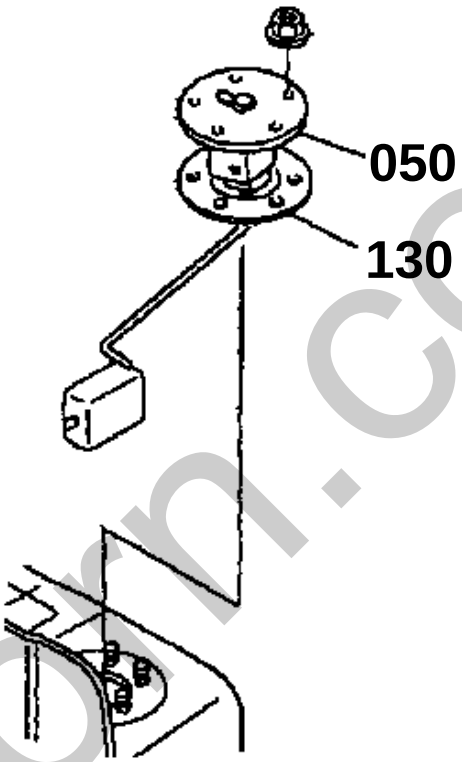

6C120-806-10

silverhorn.co.uk

FUEL TANK

↔ Interchangeable; ≠ not interchangeable; ← new for old; → old for new

REF.No	Part No.	Description	Q'ty	S.No.	I/C	REMARKS	Weight (kgf)	Weight (lb)
010	6C090-54704	ASSY TANK FUEL	1	<=50719			4.5	9.9
010	6C090-54707	ASSY TANK FUEL	1	>=50720	←		4.3	9.46
020	6C090-54740	TRAY FUEL	1				0.04	0.088
030	6C090-54760	PIPE	1				0.14	0.308
040	6C090-54780	CLAMP	1				0.007	0.0154
050	6C090-54750	GAUGE FUEL	1	<=50719			0.12	0.264
050	6C090-54753	GAUGE FUEL	1	>=50720	←		0	0
060	6C090-54860	NUT FLANGE	5				0.003	0.0066
070	6A100-54910	ASSY CAP FUEL	1				0.05	0.11
080	6A100-54920	CAP FUEL	1				0.041	0.0902
090	6A100-54942	SPACER	1				0.001	0.0022
100	6A100-54952	GASKET	1				0.02	0.044
110	6C090-54790	SPONGE	1				0.018	0.0396
120	01127-50820	BOLT	4				0.02	0.044
130	6A320-85810	GASKET GAUGE	1	<=50719			0.005	0.011
130	6A320-85812	GASKET GAUGE	1	>=50720	←		0	0

silverhorn.co.uk

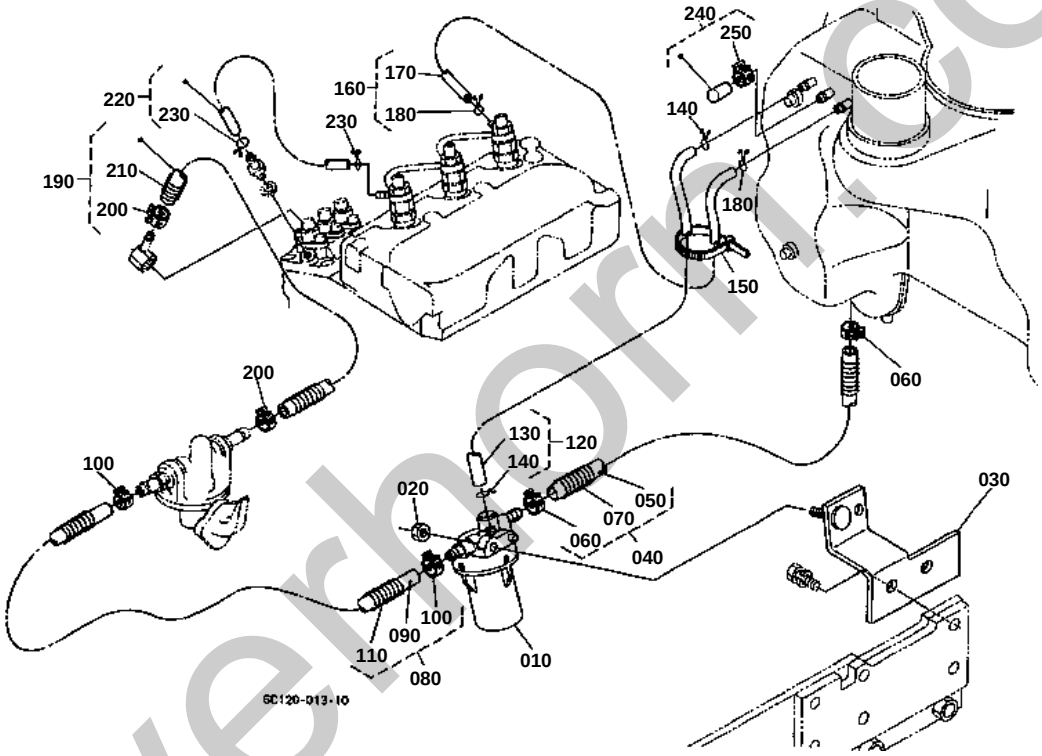

silverhorn.co.uk

FUEL PIPE

↔ Interchangeable; ≠ not interchangeable; ← new for old; → old for new

REF.No	Part No.	Description	Q'ty	S.No.	I/C	REMARKS	Weight (kgf)	Weight (lb)
010	6A320-58862	ASSY FILTER FUEL	1			REFER TO L.No.E10-L FOR COMPONENTS.	0.09	0.198
020	02121-50080	NUT	1				0.01	0.022
030	6C140-58312	STAY FUEL FILTER	1				0.17	0.374
040	6C090-54812	ASSY TUBE FUEL	1				0.04	0.088
050	09661-80260	TUBE FUEL	1				0.03	0.066
060	14911-42750	CLIP PIPE	2				0.002	0.0044
070	67111-58320	SPRING PIPE PROTECT.	1				0.02	0.044
080	6C040-59410	ASSY TUBE FUEL	1				0.058	0.1276
090	09661-70380	TUBE FUEL	1				0.04	0.088
100	14911-42750	CLIP PIPE	2				0.002	0.0044
110	76611-53370	SPRING PIPE PROTECT.	1				0.01	0.022
120	6C090-54850	ASSY PIPE AIR VENT	1				0.026	0.0572
130	09661-40460	TUBE FUEL	1				0.024	0.0528
140	14971-42750	CLIP PIPE	2				0.001	0.0022
150	55311-41260	BAND CORD	1				0.007	0.0154
160	6C090-59440	ASSY PIPE AIR VENT	1				0.017	0.0374
170	09661-40260	TUBE FUEL	1				0.015	0.033
180	14971-42750	CLIP PIPE	2				0.001	0.0022
190	15263-42010	ASSY PIPE FUEL	1				0.04	0.088
200	14911-42750	CLIP PIPE	2				0.002	0.0044
210	66591-54250	SPRING PIPE PROTECT.	1				0.01	0.022
220	15841-42500	ASSY PIPE OVER FLOW	1				0.015	0.033
230	14971-42750	CLIP PIPE	2				0.001	0.0022
240	6C090-54830	ASSY CAP FUEL TANK	1				0.004	0.0088
250	6C090-54840	CLAMP HOSE	1				0.001	0.0022

silvernorn.co.uk

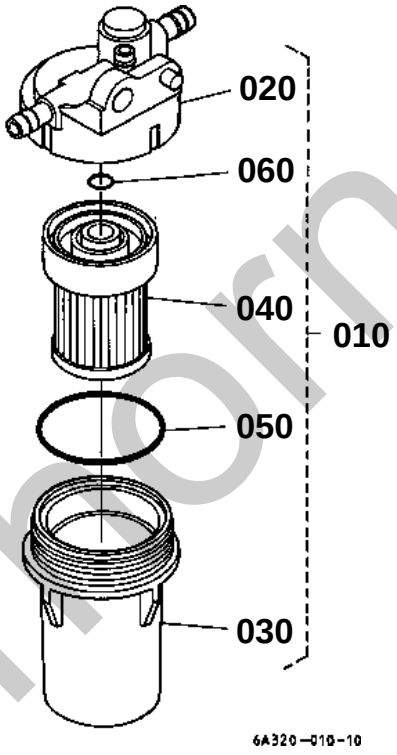

silverhorn.co.uk

FUEL FILTER [COMPONENT PARTS]

↔ Interchangeable; ≠ not interchangeable; ← new for old; → old for new

REF.No	Part No.	Description	Q'ty	S.No.	I/C	REMARKS	Weight (kgf)	Weight (lb)
010	6A320-58862	ASSY FILTER FUEL	1				0.09	0.198
020	6A320-59912	BODY	1				0.035	0.077
030	6A320-59920	CUP	1				0.03	0.066
040	6A320-59930	FILTER	1				0.025	0.055
050	6A320-59940	O-RING	1				0.001	0.0022
060	6A320-59950	O-RING	1				0.001	0.0022

silverhorn.co.uk

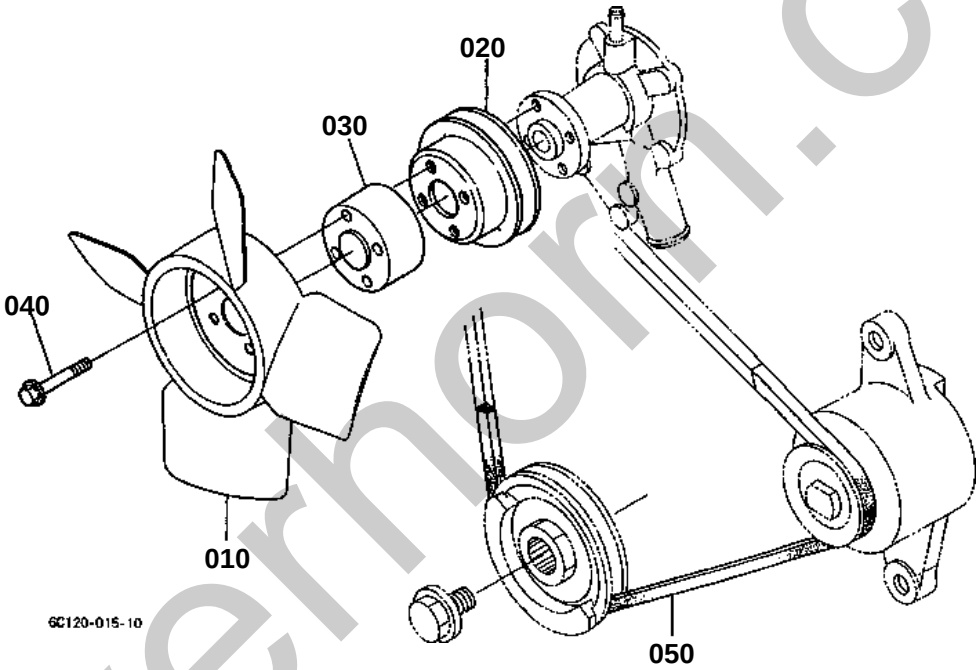

silverhorn.co.uk

FAN

↔ Interchangeable; ≠ not interchangeable; ← new for old; → old for new

REF.No	Part No.	Description	Q'ty	S.No.	I/C	REMARKS	Weight (kgf)	Weight (lb)
010	15872-74110	FAN	1				0.25	0.55
020	15841-74250	PULLEY FAN	1				0.19	0.418
030	15679-74150	COLLAR FAN	1				0.13	0.286
040	15687-91020	BOLT FLANGE	4				0.01	0.022
050	1G027-97010	V BELT	1				0	0

silverhorn.co.uk

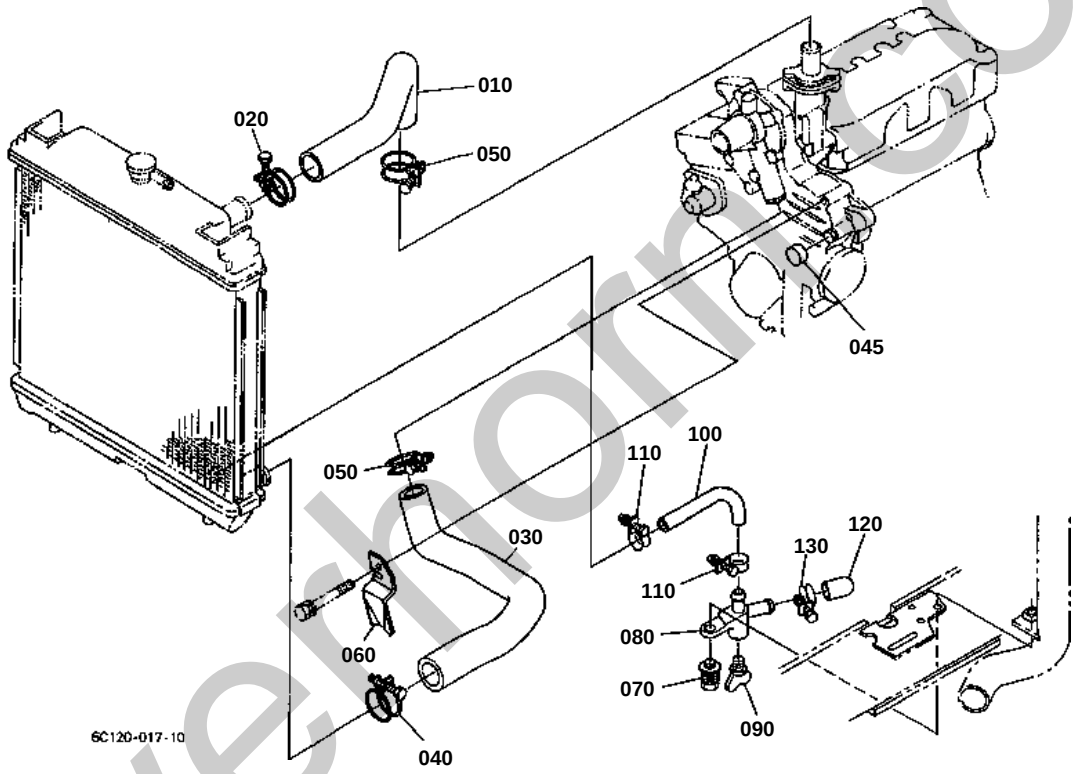

silverhomes.co.uk

WATER PIPE

↔ Interchangeable; ≠ not interchangeable; ← new for old; → old for new

REF.No	Part No.	Description	Q'ty	S.No.	I/C	REMARKS	Weight (kgf)	Weight (lb)
010	6C090-58630	HOSE WATER	1				0.09	0.198
020	67955-58630	CLAMP HOSE	1				0.025	0.055
030	6C090-58570	HOSE WATER	1				0.14	0.308
040	67955-58630	CLAMP HOSE	1				0.025	0.055
045	3F760-56750	CAP	1				0.001	0.0022
050	09318-89030	CLAMP HOSE	2				0.02	0.044
060	6C090-58643	CLAMP WATER HOSE	1				0.055	0.121
070	01125-50822	BOLT	1				0.015	0.033
080	6C040-58650	COCK	1				0.017	0.0374
090	55364-82110	COCK DRAIN	1				0.005	0.011
100	6C090-58680	HOSE DRAIN	1				0.025	0.055
110	6C040-58720	CLAMP HOSE	2				0.017	0.0374
120	6C090-58690	CAP DRAIN	1				0.007	0.0154
130	6C040-58730	CLAMP HOSE	1				0.017	0.0374

silverhorn.co.uk

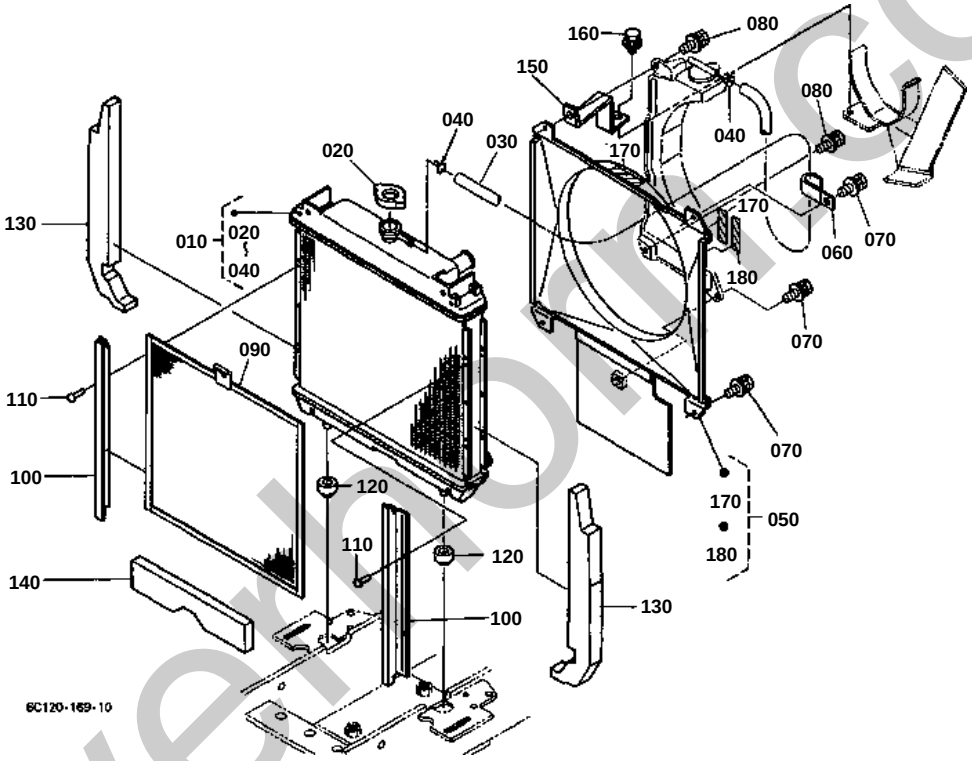

silverthorn.co.uk

RADIATOR [EXCEPT[AU]]

↔ Interchangeable; ≠ not interchangeable; ← new for old; → old for new

REF.No	Part No.	Description	Q'ty	S.No.	I/C	REMARKS	Weight (kgf)	Weight (lb)
010	6C090-58502	ASSY RADIATOR	1				3	6.6
020	6C040-58660	ASSY CAP RADIATOR	1				0.043	0.0946
030	6C090-58670	HOSE OVER FLOW	1				0.033	0.0726
040	6C040-58710	CLIP	2				0.002	0.0044
050	6C090-58602	KIT SHROUD FAN	1				0.6	1.32
060	15272-67590	CLAMP CORD	1				0.004	0.0088
070	01025-50616	BOLT	3				0.005	0.011
080	01025-50620	BOLT	2				0.02	0.044
090	6C120-58530	NET RADIATOR	1				0.24	0.528
100	6C090-58540	GUIDE	2				0.107	0.2354
110	54102-24410	RIVET	4				0.001	0.0022
120	6C040-58580	CUSHION RADIATOR	2				0.021	0.0462
130	6C090-54453	TAPE RADIATOR	2				0.03	0.066
140	6C090-54470	TAPE RADIATOR	1				0.017	0.0374
150	6C090-58590	STAY RADIATOR	1				0.13	0.286
160	01025-50616	BOLT	1				0.005	0.011
170	6C090-49580	LABEL FAN WARNING	2				0.005	0.011
180	6C090-49590	LABEL MUFFLER	1				0.005	0.011

silverhorn.co.uk

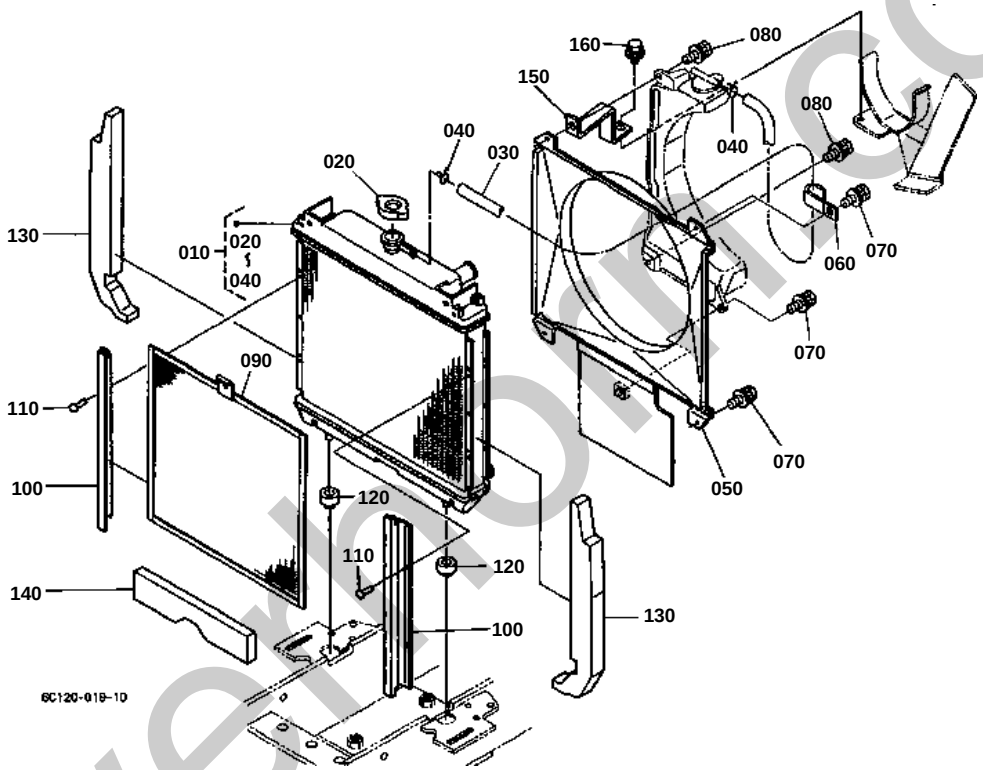

silverthorn.co.uk

RADIATOR [AU]

↔ Interchangeable; ≠ not interchangeable; ← new for old; → old for new

REF.No	Part No.	Description	Q'ty	S.No.	I/C	REMARKS	Weight (kgf)	Weight (lb)
010	6C090-58502	ASSY RADIATOR	1				3	6.6
020	6C040-58660	ASSY CAP RADIATOR	1				0.043	0.0946
030	6C090-58670	HOSE OVER FLOW	1				0.033	0.0726
040	6C040-58710	CLIP	2				0.002	0.0044
050	6C090-58615	SHROUD FAN	1				0	0
060	15272-67590	CLAMP CORD	1				0.004	0.0088
070	01025-50616	BOLT	3				0.005	0.011
080	01025-50620	BOLT	2				0.02	0.044
090	6C120-58530	NET RADIATOR	1				0.24	0.528
100	6C090-58540	GUIDE	2				0.107	0.2354
110	54102-24410	RIVET	4				0.001	0.0022
120	6C040-58580	CUSHION RADIATOR	2				0.021	0.0462
130	6C090-54453	TAPE RADIATOR	2				0.03	0.066
140	6C090-54470	TAPE RADIATOR	1				0.017	0.0374
150	6C090-58590	STAY RADIATOR	1				0.13	0.286
160	01025-50616	BOLT	1				0.005	0.011

silverhorn.co.uk

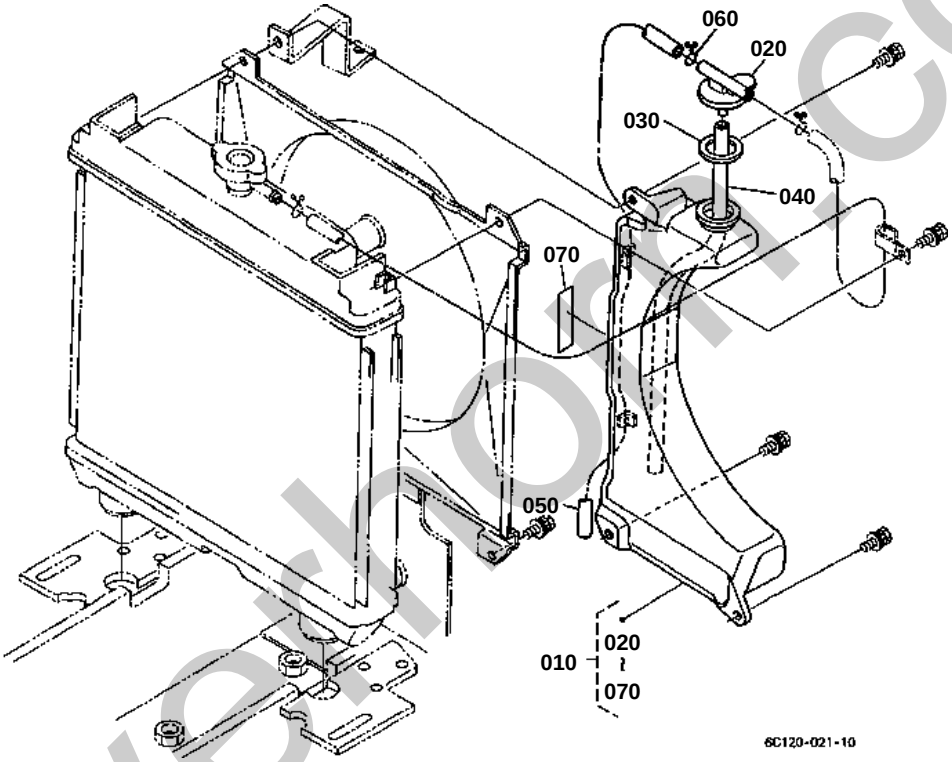

silverthorn.co.uk

RESERVE TANK [EXCEPT[AU]]

↔ Interchangeable; ≠ not interchangeable; ← new for old; → old for new

REF.No	Part No.	Description	Q'ty	S.No.	I/C	REMARKS	Weight (kgf)	Weight (lb)
010	6C090-99150	KIT TANK RESERVE	1				0.35	0.77
020	6C090-58820	CAP	1				0.006	0.0132
030	6C090-58830	GASKET	1				0.001	0.0022
040	6C090-58840	HOSE	1				0.034	0.0748
050	6C090-58850	HOSE	1				0.042	0.0924
060	6C040-58710	CLIP	1				0.002	0.0044
070	6C090-49580	LABEL FAN WARNING	1				0.005	0.011

silverhorn.co.uk

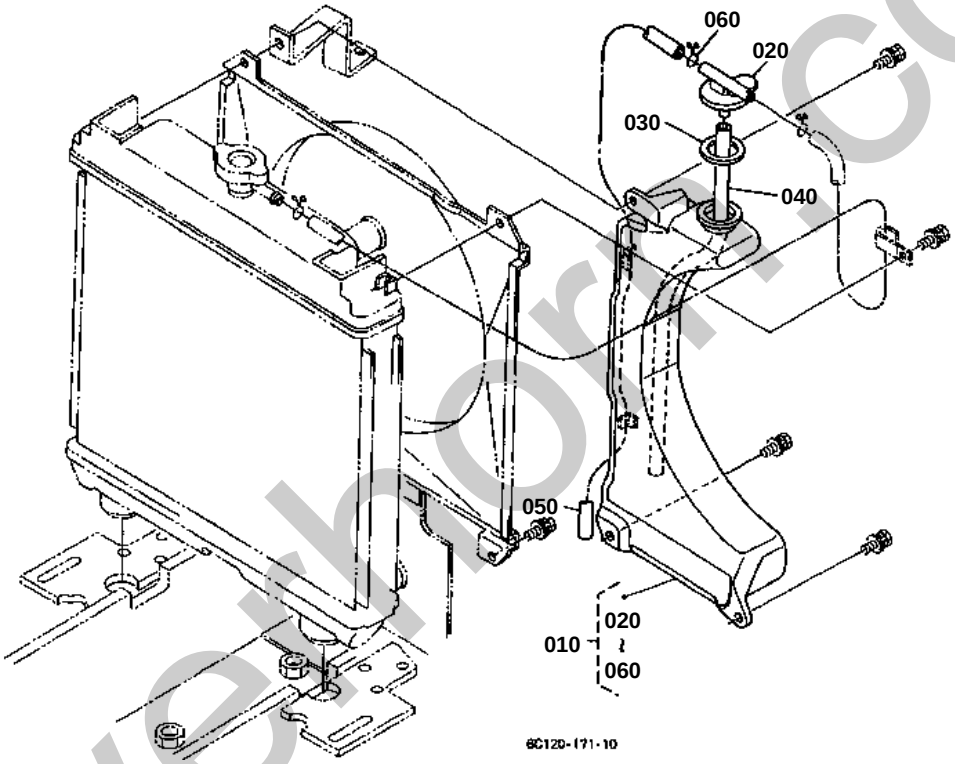

silverthorn.co.uk

RESERVE TANK [AU]

↔ Interchangeable; ≠ not interchangeable; ← new for old; → old for new

REF.No	Part No.	Description	Q'ty	S.No.	I/C	REMARKS	Weight (kgf)	Weight (lb)
010	6C090-58800	ASSY TANK RESERVE	1				0.4	0.88
020	6C090-58820	CAP	1				0.006	0.0132
030	6C090-58830	GASKET	1				0.001	0.0022
040	6C090-58840	HOSE	1				0.034	0.0748
050	6C090-58850	HOSE	1				0.042	0.0924
060	6C040-58710	CLIP	1				0.002	0.0044

silverhorn.co.uk

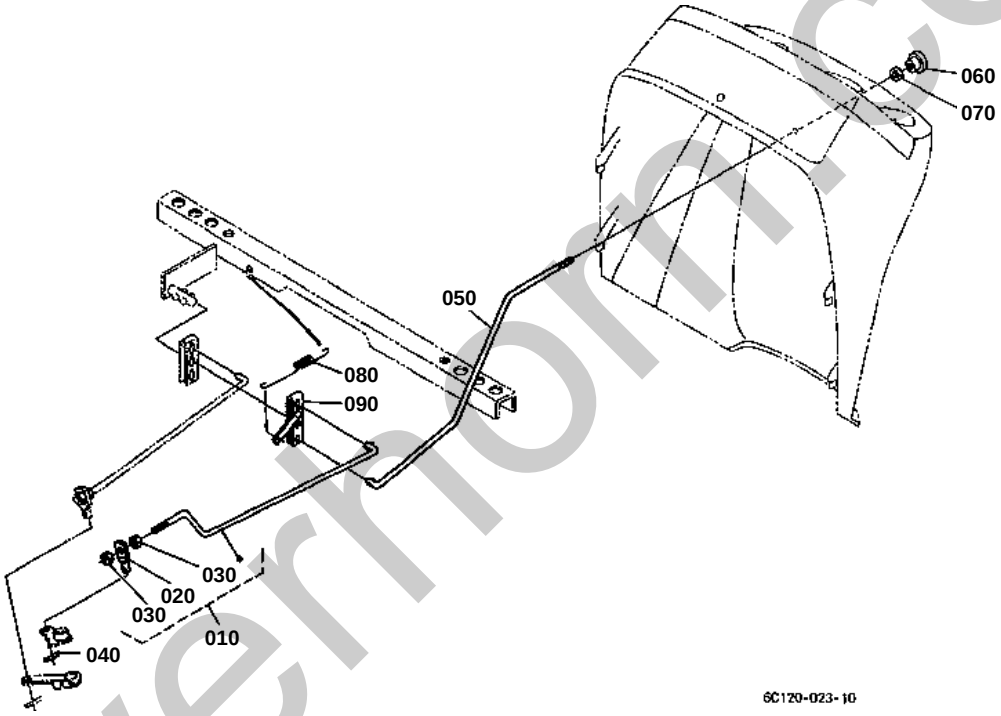

silverhorn.co.uk

STOP SOLENOID

↔ Interchangeable; ≠ not interchangeable; ← new for old; → old for new

REF.No	Part No.	Description	Q'ty	S.No.	I/C	REMARKS	Weight (kgf)	Weight (lb)
010	6C090-43220	ASSY ROD ENGINE STOP	1				0.07	0.154
020	6C090-43280	CONNECTOR	1				0.004	0.0088
030	02014-50060	NUT	2				0.003	0.0066
040	05525-50800	PIN SNAP	1				0.001	0.0022
050	6C090-43214	ROD ENGINE STOP	1				0.5	1.1
060	6A310-43220	KNOB	1				0.01	0.022
070	02014-50060	NUT	1				0.003	0.0066
080	6C090-43310	SPRING	1				0.012	0.0264
090	6C090-43260	LEVER ENGINE STOP	1				0.063	0.1386

silverhorn.co.uk

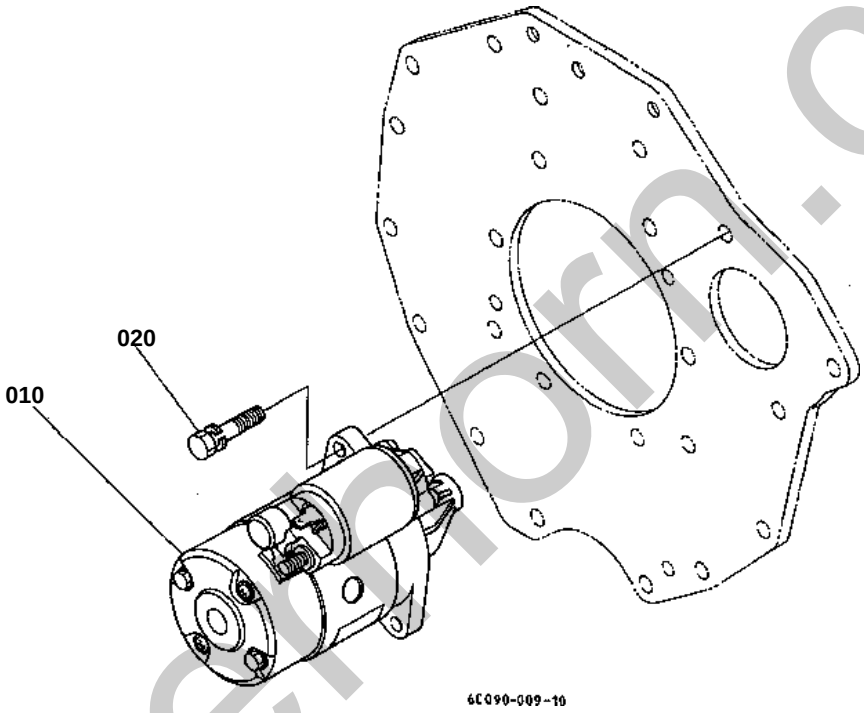

silvermorn.co.uk

↔ Interchangeable; ≠ not interchangeable; ← new for old; → old for new

REF.No	Part No.	Description	Q'ty	S.No.	I/C	REMARKS	Weight (kgf)	Weight (lb)
010	6C090-59300	ASSY STARTER	1			REFER TO L.No.F02-L FOR COMPONENTS.	3.6	7.92
020	01123-50840	BOLT	2				0.018	0.0396

silverhorn.co.uk

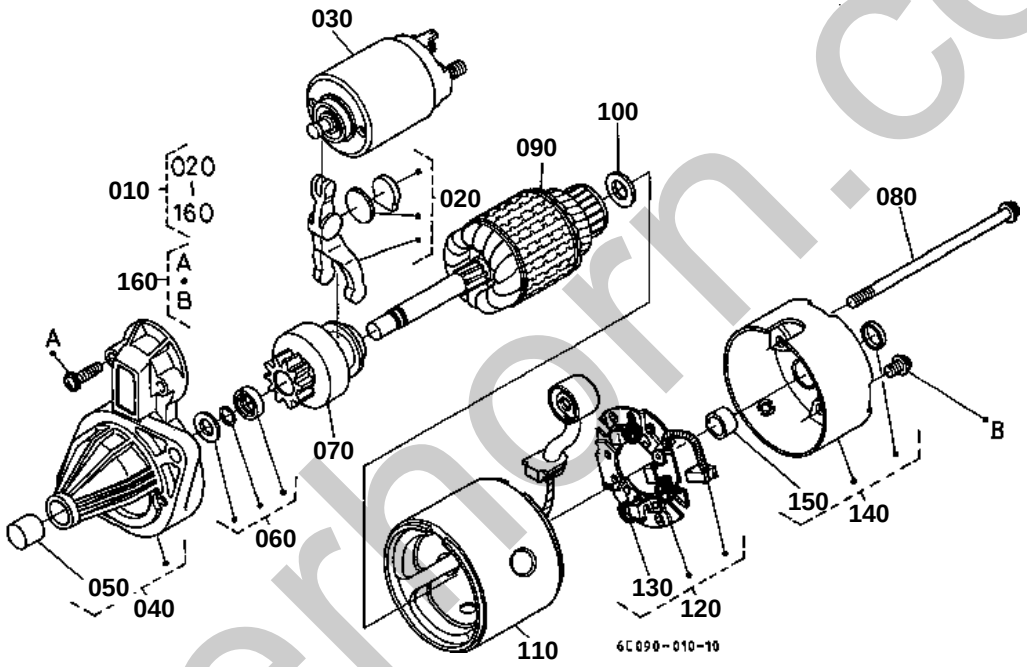

silverhorn.co.uk

STARTER [COMPONENT PARTS]

↔ Interchangeable; ≠ not interchangeable; ← new for old; → old for new

REF.No	Part No.	Description	Q'ty	S.No.	I/C	REMARKS	Weight (kgf)	Weight (lb)
010	6C090-59300	ASSY STARTER	1				3.6	7.92
020	15852-63050	LEVER DRIVE	1				0.015	0.033
030	6C090-59320	ASSY SWITCH	1				0.67	1.474
040	6C090-59330	ASSY BRACKET FRONT	1				0.26	0.572
050	15852-63240	BUSH	1				0.006	0.0132
060	19837-63150	STOPPER	1				0.007	0.0154
070	6C090-59340	CLUTCH OVER RUNNING	1				0.21	0.462
080	15852-63320	BOLT	2				0.016	0.0352
090	15852-63070	ARMATURE	1				0.99	2.178
100	15852-63410	WASHER ADJUSTING	1				0.006	0.0132
110	6C090-59350	ASSY YOKE	1				1.06	2.332
120	15852-63380	HOLDER BRUSH	1				0.052	0.1144
130	15852-63390	SPRING BRUSH	3				0.002	0.0044
140	15852-63200	FRAME END	1				0.2	0.44
150	15852-63250	BUSH	1				0.006	0.0132
160	15852-93310	SCREW PAN-HEAD	1				0.02	0.044

silverhorn.co.uk

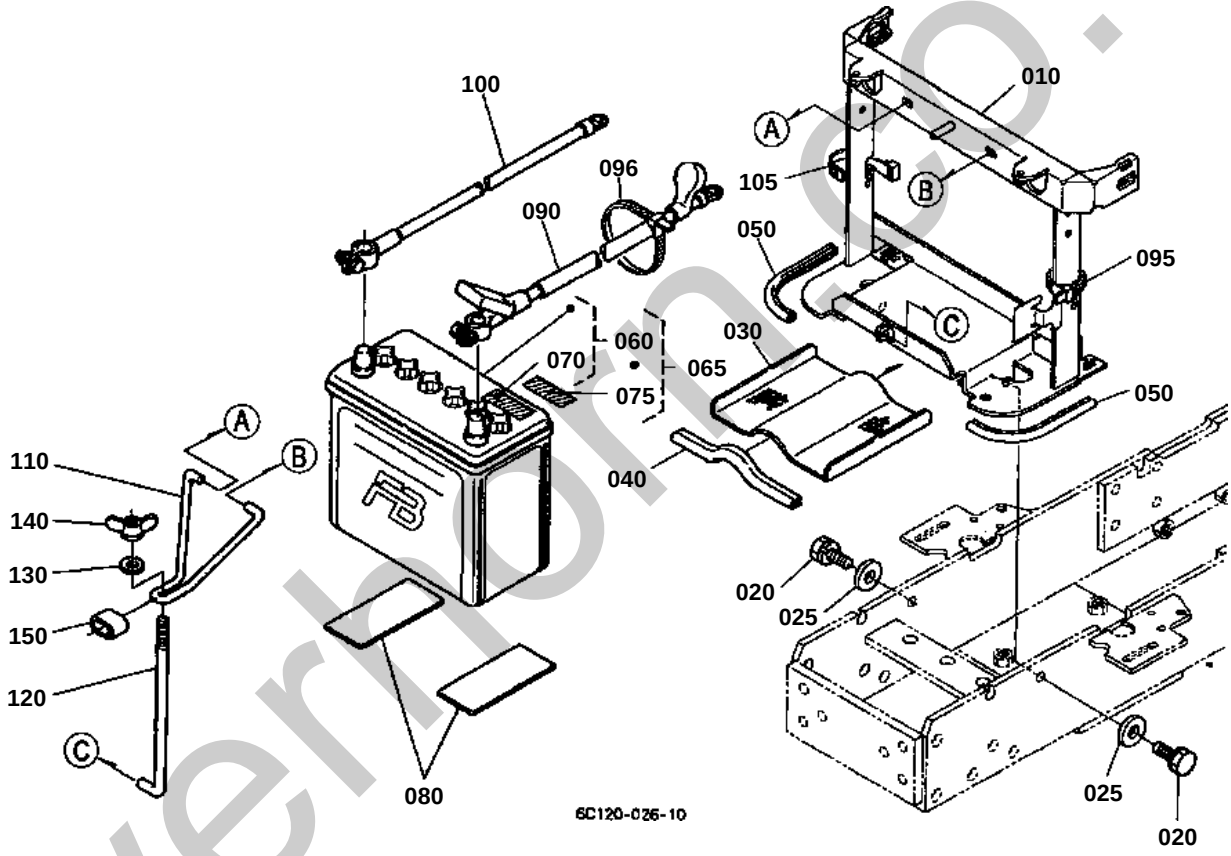

silverhorse.co.uk

BATTERY [EXCEPT[AU]]

↔ Interchangeable; ≠ not interchangeable; ← new for old; → old for new

REF.No	Part No.	Description	Q'ty	S.No.	I/C	REMARKS	Weight (kgf)	Weight (lb)
010	6C120-51220	BRACKET BATTERY	1				2.6	5.72
020	01133-51030	BOLT	2				0.025	0.055
025	04013-60100	WASHER PLAIN	2				0.004	0.0088
030	6C090-51260	NET	1				0.26	0.572
040	76650-42520	TRIM DUSTPROOF	1				0.03	0.066
050	76611-56920	TRIM DUSTPROOF PLATE	2				0.025	0.055
060	6C040-55512	ASSY BATTERY	1			ENGLISH	0	0
065	6C040-99182	KIT BATTERY (B)	1			FRENCH	0	0
070	6C040-55590	LABEL BATTERY	1			ENGLISH	0.001	0.0022
075	6C021-92120	LABEL BATTERY	1			FRENCH	0.001	0.0022
080	34150-33220	CUSHION	2				0.015	0.033
090	6C090-55530	CORD BATTERY(+)	1				0.22	0.484
095	53581-64150	BAND CORD	1				0.002	0.0044
096	55311-41260	BAND CORD	1				0.007	0.0154
100	6C040-55540	CORD BATTERY(-)	1				0.11	0.242
105	53581-64150	BAND CORD	1				0.002	0.0044
110	6C090-55550	RETAINER BATTERY	1				0.005	0.011
120	6C040-55560	BOLT HOOK	1				0.038	0.0836
130	04015-60060	WASHER PLAIN	1				0.005	0.011
140	02810-50060	NUT WING	1				0.009	0.0198
150	6C040-55580	CUSHION	1				0.002	0.0044

silverhorn.co.uk

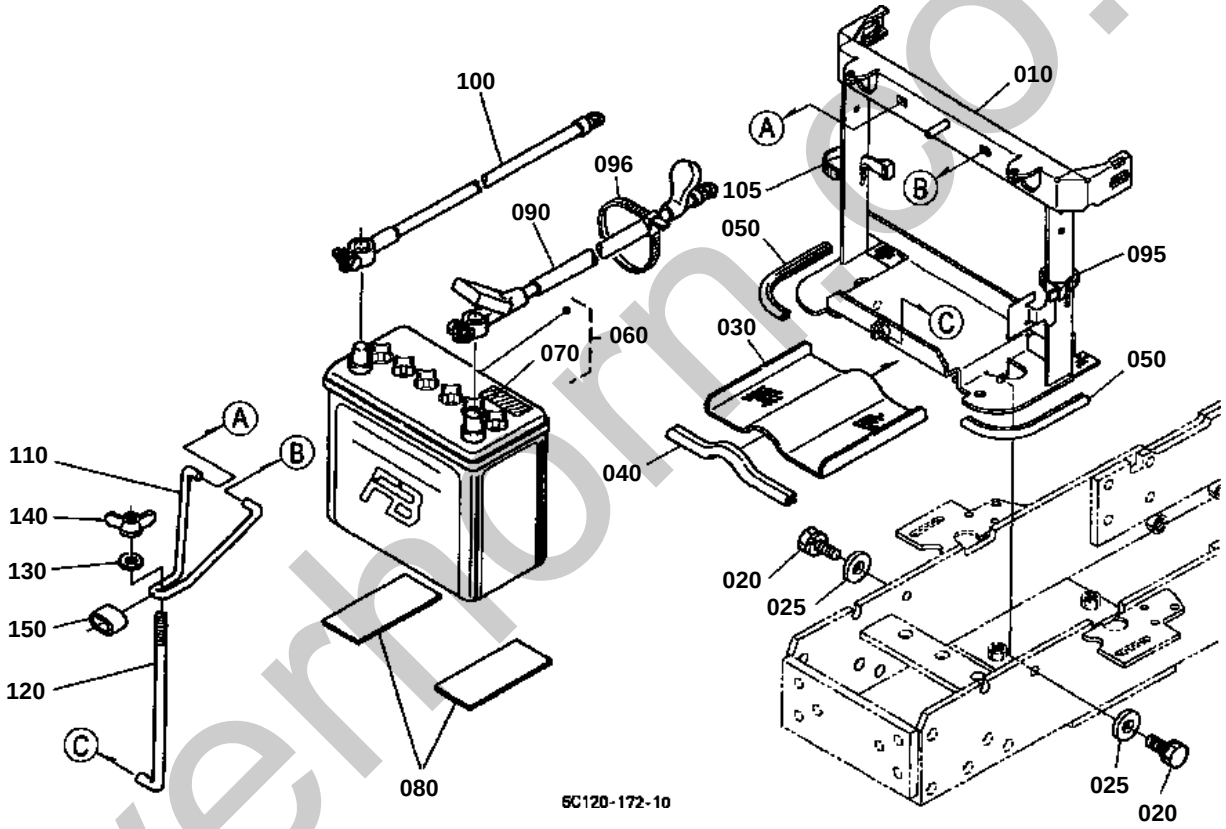

silvermorne.co.uk

BATTERY [AU]

↔ Interchangeable; ≠ not interchangeable; ← new for old; → old for new

REF.No	Part No.	Description	Q'ty	S.No.	I/C	REMARKS	Weight (kgf)	Weight (lb)
010	6C120-51220	BRACKET BATTERY	1				2.6	5.72
020	01133-51030	BOLT	2				0.025	0.055
025	04013-60100	WASHER PLAIN	2				0.004	0.0088
030	6C090-51260	NET	1				0.26	0.572
040	76650-42520	TRIM DUSTPROOF	1				0.03	0.066
050	76611-56920	TRIM DUSTPROOF PLATE	2				0.025	0.055
060	6C040-55512	ASSY BATTERY	1				0	0
070	6C040-55590	LABEL BATTERY	1				0.001	0.0022
080	34150-33220	CUSHION	2				0.015	0.033
090	6C090-55530	CORD BATTERY(+)	1				0.22	0.484
095	53581-64150	BAND CORD	1				0.002	0.0044
096	55311-41260	BAND CORD	1				0.007	0.0154
100	6C040-55540	CORD BATTERY(-)	1				0.11	0.242
105	53581-64150	BAND CORD	1				0.002	0.0044
110	6C090-55550	RETAINER BATTERY	1				0.005	0.011
120	6C040-55560	BOLT HOOK	1				0.038	0.0836
130	04015-60060	WASHER PLAIN	1				0.005	0.011
140	02810-50060	NUT WING	1				0.009	0.0198
150	6C040-55580	CUSHION	1				0.002	0.0044

silverhorn.co.uk

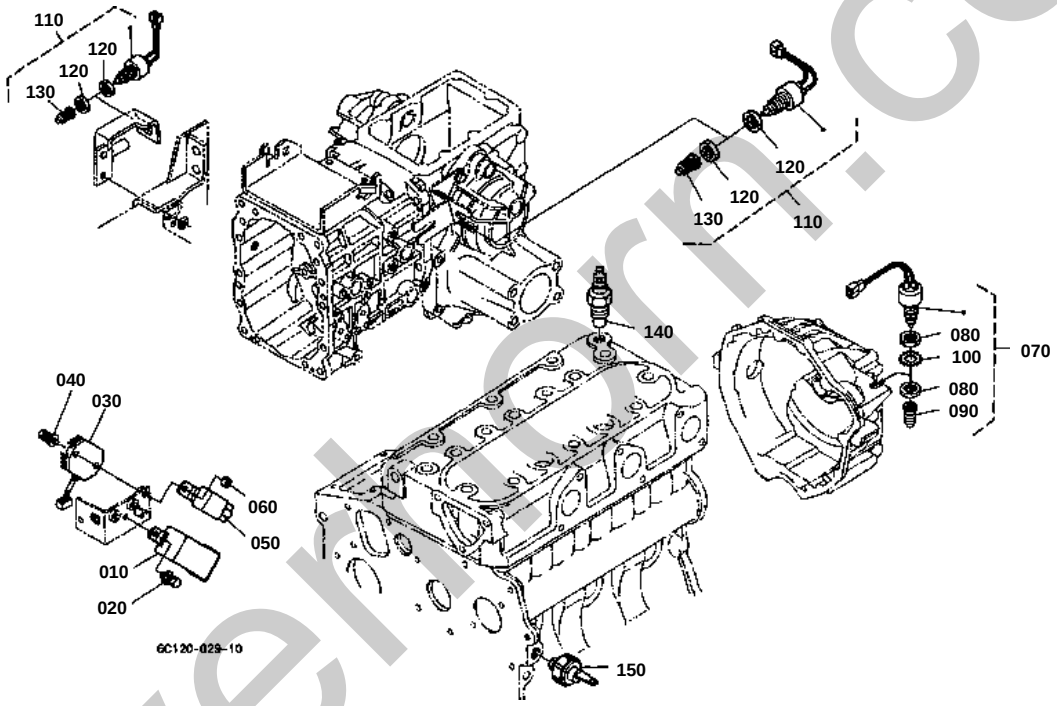

silvermorr.co.uk

SWITCH [HST TYPE]

↔ Interchangeable; ≠ not interchangeable; ← new for old; → old for new

REF.No	Part No.	Description	Q'ty	S.No.	I/C	REMARKS	Weight (kgf)	Weight (lb)
010	3F240-75430	UNIT FLASHER	1				0.06	0.132
020	01205-50616	BOLT	1				0.007	0.0154
030	RP201-53710	ASSY REGULATOR	1				0.185	0.407
040	01205-50630	BOLT	1				0	0
050	68881-53540	COMP.RELAY	1				0.04	0.088
060	02021-50060	NUT	1				0.005	0.011
070	6C040-55852	ASSY SWITCH SAFETY	1				0	0
080	67111-55830	NUT SAFETY SWITCH	2				0.035	0.077
090	67111-55840	CAP SAFETY SWITCH	1				0.002	0.0044
100	6C040-55862	WASHER	1				0	0
110	52320-42900	SWITCH SAFETY	2				0.1	0.22
120	67111-55830	NUT SAFETY SWITCH	4				0.035	0.077
130	67111-55840	CAP SAFETY SWITCH	2				0.002	0.0044
140	31351-32830	SENSOR THERMO	1				0.02	0.044
150	15531-39010	SWITCH OIL	1				0.032	0.0704

silverhorn.co.uk

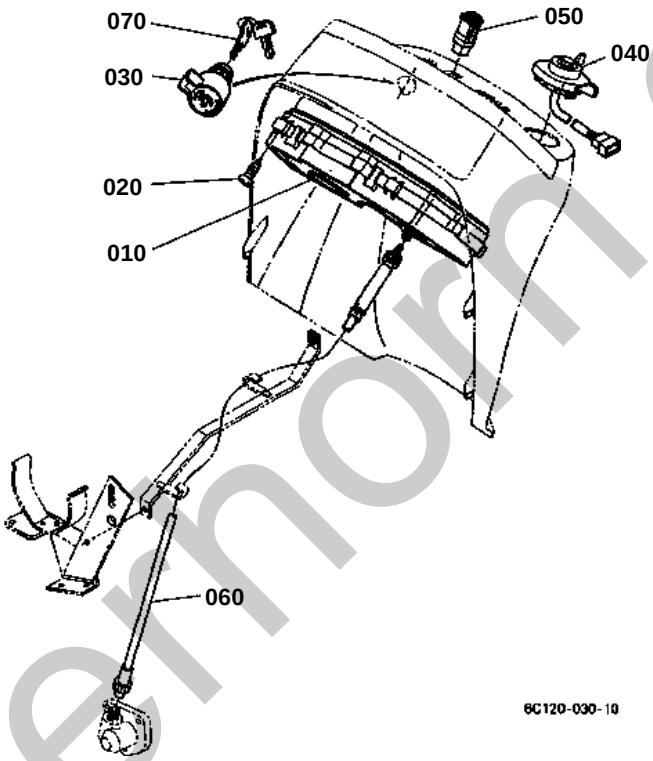

silvermorn.co.uk

↔ Interchangeable; ≠ not interchangeable; ← new for old; → old for new

REF.No	Part No.	Description	Q'ty	S.No.	I/C	REMARKS	Weight (kgf)	Weight (lb)
010	6C110-55100	ASSY METER	1			REFER TO L.No.F07-R FOR COMPONENTS.	0.76	1.672
020	03514-50420	SCREW TAPPING	6				0.002	0.0044
020	03514-50420	SCREW TAPPING	6				0.002	0.0044
030	6C040-55452	SWITCH STARTER	1				0.22	0.484
040	6C070-55420	SWITCH COMBINATION	1				0.08	0.176
050	6C070-55430	SWITCH HAZARD	1				0.019	0.0418
060	6C040-55440	CABLE HOUR METER	1				0.2	0.44
070	15248-63700	KEY STARTER	2				0.034	0.0748

silverhorn.co.uk

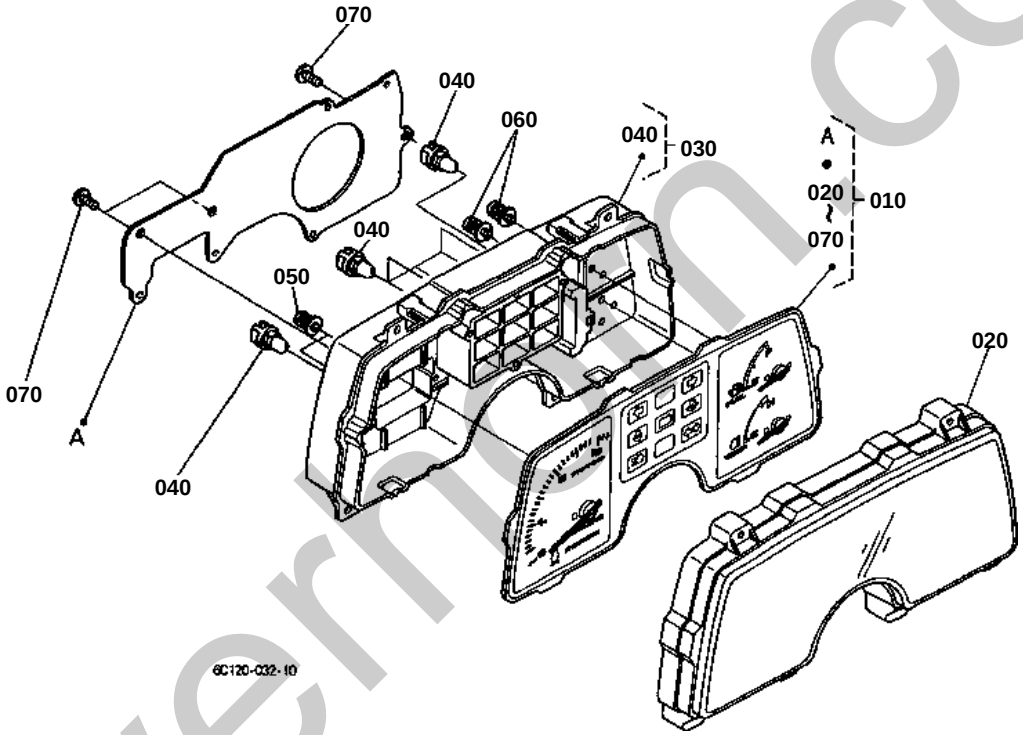

silverhorn.co.uk

↔ Interchangeable; ≠ not interchangeable; ← new for old; → old for new

REF.No	Part No.	Description	Q'ty	S.No.	I/C	REMARKS	Weight (kgf)	Weight (lb)
010	6C110-55100	ASSY METER	1				0.76	1.672
020	6C040-55120	GLASS	1				0.16	0.352
030	6C070-55130	ASSY CASE	1				0.28	0.616
040	6C040-55140	ASSY BULB	7			1.7W	0.003	0.0066
050	6C040-55150	SCREW	2				0.002	0.0044
060	6C040-55160	SCREW	6				0.002	0.0044
070	6C040-55180	SCREW	3				0.003	0.0066

silverhorn.co.uk

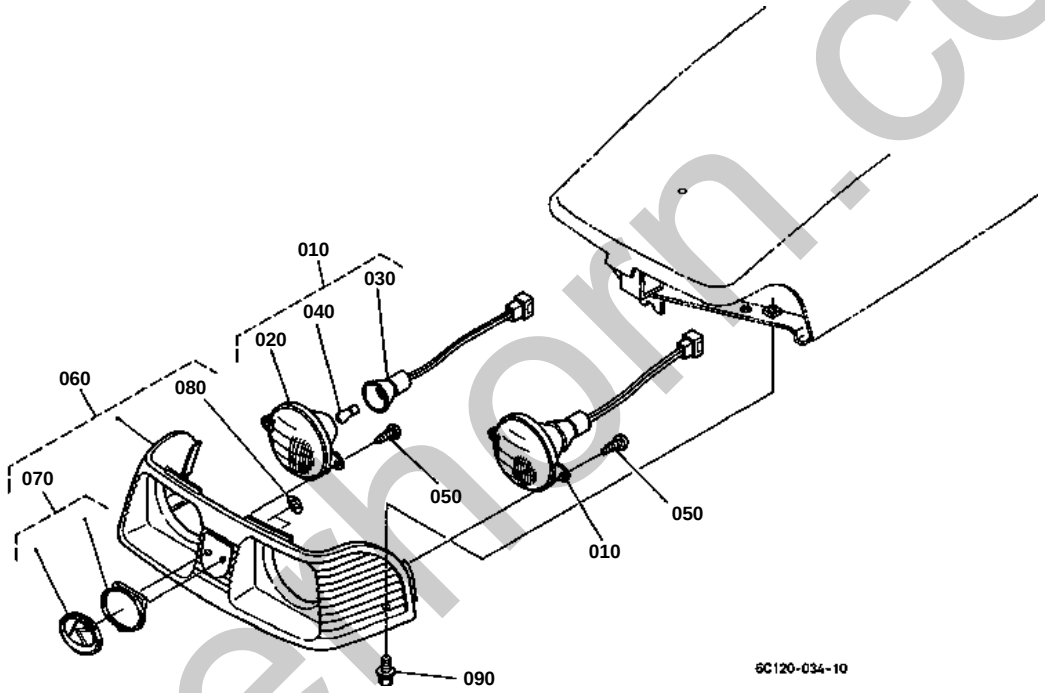

silverthorn.co.uk

HEAD LIGHT

↔ Interchangeable; ≠ not interchangeable; ← new for old; → old for new

REF.No	Part No.	Description	Q'ty	S.No.	I/C	REMARKS	Weight (kgf)	Weight (lb)
010	6C090-55610	ASSY LIGHT HEAD	2				0.13	0.286
020	66591-55610	LAMP HEAD	2				0.15	0.33
030	6C040-55630	COMP.SOCKET	2				0.019	0.0418
040	66591-55630	BULB	2			15W	0.008	0.0176
050	03514-50512	SCREW TAPPING	4				0.003	0.0066
060	6C120-54180	ASSY GRILLE LIGHT	1				0.4	0.88
070	6C140-54200	MARK K	1	<=50753			0.019	0.0418
070	6C140-54202	MARK K	1	>=50754	≠		0.019	0.0418
080	6C040-54540	NUT	2	<=50753			0.001	0.0022
080	6A100-54170	NUT	2	>=50754	≠		0.001	0.0022
090	01125-60820	BOLT	3				0.015	0.033

silverhorn.co.uk

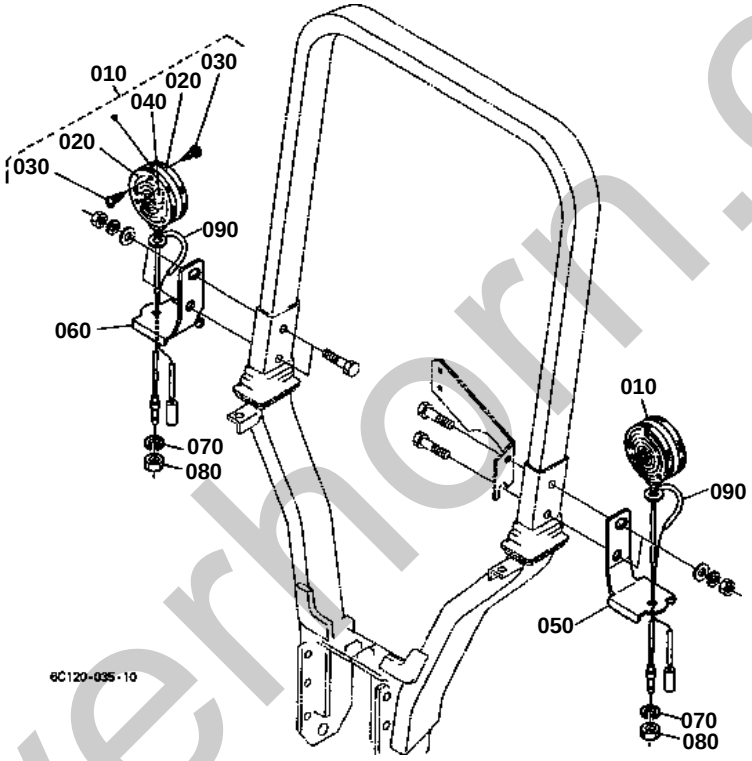

silverhorn.co.uk

HAZARD LIGHT

↔ Interchangeable; ≠ not interchangeable; ← new for old; → old for new

REF.No	Part No.	Description	Q'ty	S.No.	I/C	REMARKS	Weight (kgf)	Weight (lb)
010	32530-33610	ASSY LIGHT HAZARD	2				0.5	1.1
020	32530-91510	LENS HAZARD LIGHT	4				0.085	0.187
030	32530-91520	SCREW TAPPING	12				0.001	0.0022
040	32530-91530	BULB LIGHT	2			27W	0.02	0.044
050	6C140-54960	STAY HAZARD LIGHT LH	1				0.36	0.792
060	6C140-54970	STAY HAZARD LIGHT RH	1				0.36	0.792
070	04411-50100	WASHER TOOTHED	2				0.001	0.0022
080	02114-50100	NUT	2				0.005	0.011
090	6C040-55480	WIRE HARNESS	2				0.005	0.011

silverhorn.co.uk

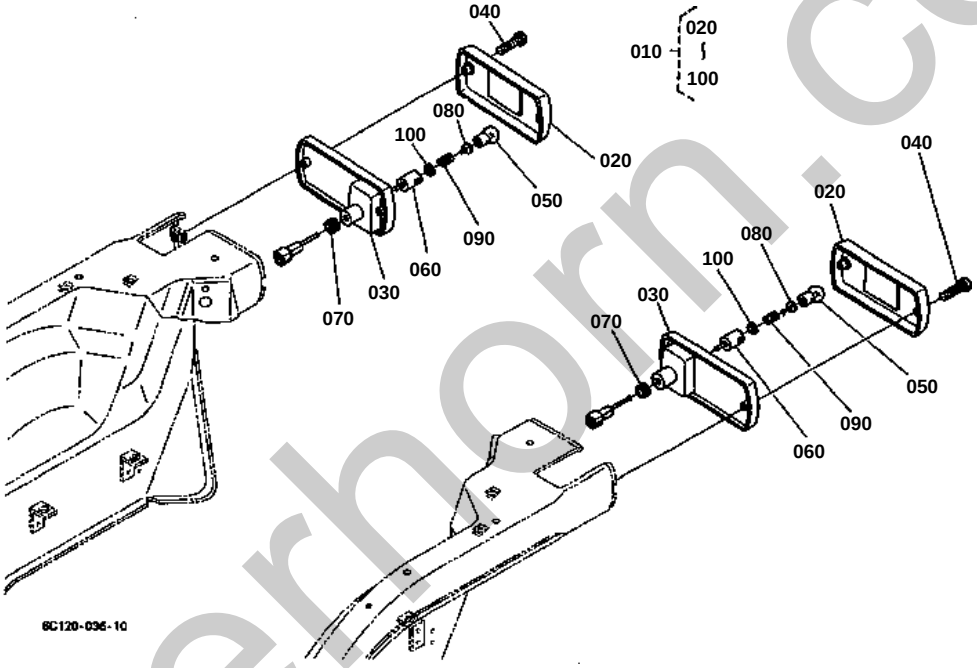

silverhorn.co.uk

TAIL LIGHT

↔ Interchangeable; ≠ not interchangeable; ← new for old; → old for new

REF.No	Part No.	Description	Q'ty	S.No.	I/C	REMARKS	Weight (kgf)	Weight (lb)
010	6C040-55490	ASSY LIGHT TAIL	2				0.21	0.462
020	6C040-92200	ASSY LENS	2				0.1	0.22
030	6C040-92120	BODY	2				0.065	0.143
040	6C040-92140	SCREW	4				0.007	0.0154
050	6C040-92150	BULB	2			8W	0.006	0.0132
060	6C040-92160	SOCKET	2				0.007	0.0154
070	6C040-92170	BUSH RUBBER	2				0.001	0.0022
080	6C040-92180	INSULATOR	2				0.001	0.0022
090	6C040-92190	SPRING	2				0.001	0.0022
100	6C040-92210	WASHER	2				0.001	0.0022

silverhorn.co.uk

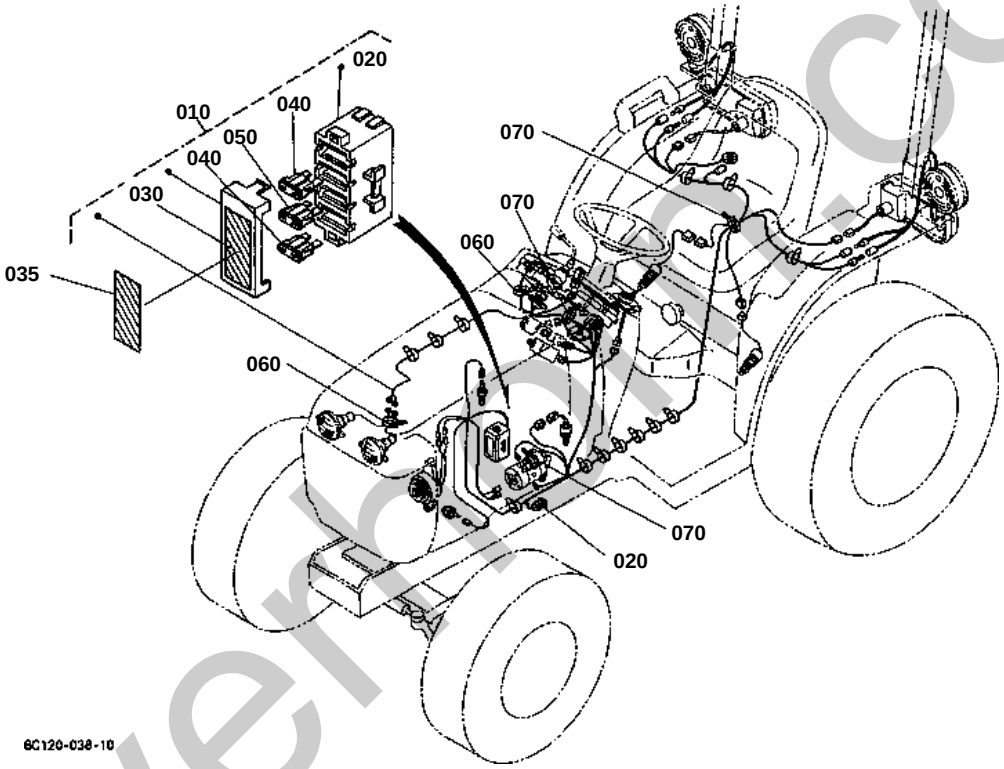

silvermoor.co.uk

↔ Interchangeable; ≠ not interchangeable; ← new for old; → old for new

REF.No	Part No.	Description	Q'ty	S.No.	I/C	REMARKS	Weight (kgf)	Weight (lb)
010	6C120-55460	ASSY WIRE HARNESS	1				1.04	2.288
020	1G111-65720	FUSE	1			30A	0.009	0.0198
030	6C090-47490	LABEL FUSE BOX	1			ENGLISH	0.001	0.0022
035	6C091-47490	LABEL FUSE	1			FRENCH	0.001	0.0022
040	48100-55880	FUSE AUTO	2			10A	0.01	0.022
050	52200-41620	FUSE AUTO	1			15A	0.003	0.0066
060	53581-64150	BAND CORD	2				0.002	0.0044
070	55311-41260	BAND CORD	3				0.007	0.0154

silverhorn.co.uk

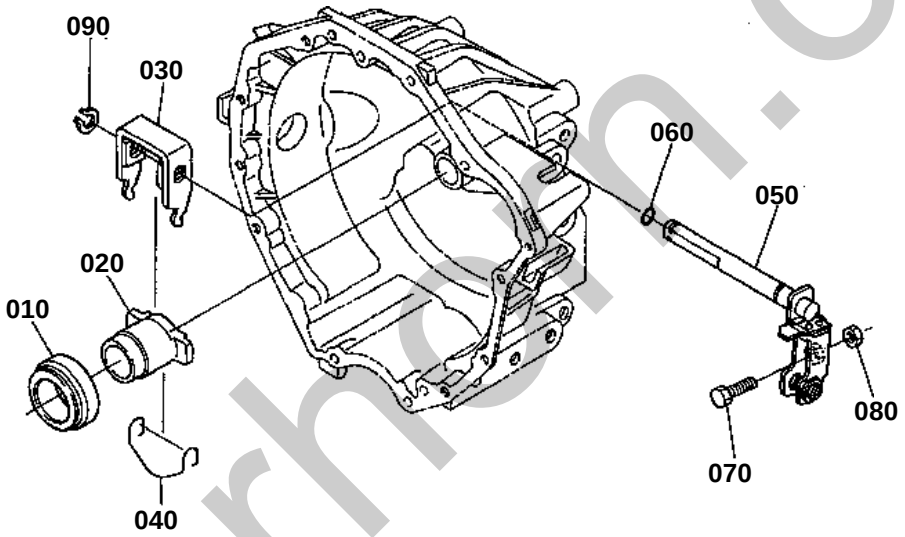

6C090—016—10

silverhorn.co.uk

CLUTCH ROD

↔ Interchangeable; ≠ not interchangeable; ← new for old; → old for new

REF.No	Part No.	Description	Q'ty	S.No.	I/C	REMARKS	Weight (kgf)	Weight (lb)
010	6C040-13210	BEARING RELEASE	1				0.157	0.3454
020	6C090-13220	HOLDER BEARING	1				0.21	0.462
030	6C040-13230	FORK CLUTCH RELEASE	1				0.22	0.484
040	6C040-13240	SPRING	1				0.003	0.0066
050	6C040-13257	SHAFT CLUTCH ROD	1				0.37	0.814
060	04811-10140	O RING	1				0.001	0.0022
070	66711-13320	BOLT ADJUSTING	1				0.028	0.0616
080	02118-50100	NUT	1				0.005	0.011
090	04612-00160	CIR CLIP EXTERNAL	1				0.001	0.0022

silverhorn.co.uk

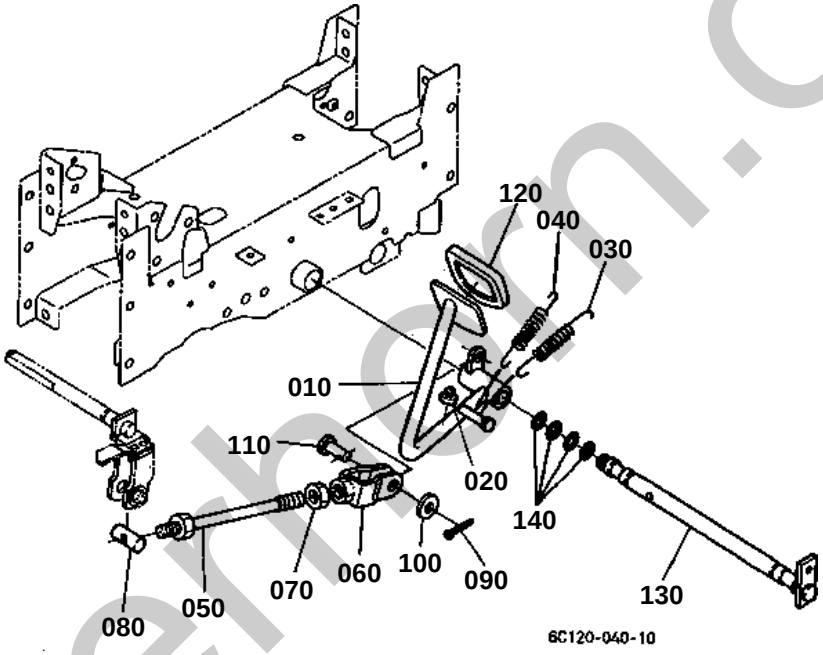

silverhorn.co.uk

CLUTCH PEDAL

↔ Interchangeable; ≠ not interchangeable; ← new for old; → old for new

REF.No	Part No.	Description	Q'ty	S.No.	I/C	REMARKS	Weight (kgf)	Weight (lb)
010	6C040-42135	PEDAL CLUTCH	1				1.68	3.696
020	6C040-42342	CUSHION	1				0.005	0.011
030	6C040-42150	SPRING	1				0.157	0.3454
040	6C040-42160	SPRING	1				0.05	0.11
050	6C040-42113	ROD CLUTCH	1				0.255	0.561
060	6C040-42120	U JOINT	1				0.118	0.2596
070	37720-28990	NUT	1				0.008	0.0176
080	6C040-42142	PIN CLUTCH ROD	1				0.034	0.0748
090	05511-50322	PIN SPLIT	1				0.002	0.0044
100	04013-60100	WASHER PLAIN	1				0.004	0.0088
110	05122-51025	PIN JOINT	1				0.017	0.0374
120	37410-44120	COVER PEDAL	1				0.08	0.176
130	6C040-42310	SHAFT PEDAL	1				1.68	3.696
140	04811-00210	O RING	4				0.001	0.0022

silverhorn.co.uk

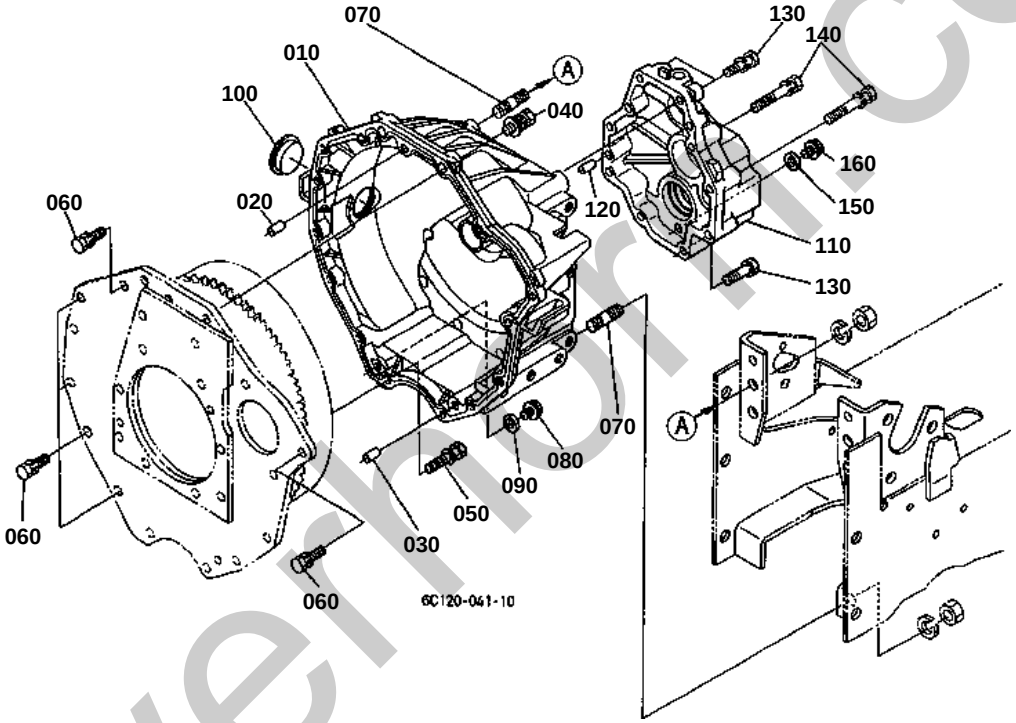

silverhorn.co.uk

CLUTCH HOUSING

↔ Interchangeable; ≠ not interchangeable; ← new for old; → old for new

REF.No	Part No.	Description	Q'ty	S.No.	I/C	REMARKS	Weight (kgf)	Weight (lb)
010	6C090-13110	HOUSING CLUTCH	1				5.2	11.44
020	05012-00814	PIN STRAIGHT	1				0.006	0.0132
030	66611-11160	PIN KNOCK	1				0.01	0.022
040	01125-50830	BOLT	2				0.01	0.022
050	01123-50845	BOLT	2				0.02	0.044
060	01123-50830	BOLT	9				0.015	0.033
070	01555-51225	STUD	4				0.039	0.0858
080	01754-50812	BOLT FLANGE	1				0.01	0.022
090	04717-00800	WASHER WITH RUBBER	1				0.001	0.0022
100	37410-13124	PLUG	1				0.02	0.044
110	6C140-13120	COVER CLUTCH HOUSING	1	<=50750			1.06	2.332
110	6C110-13120	COVER CLUTCH HOUSING	1	>=50751	≠		0	0
120	05012-00614	PIN STRAIGHT	2				0.004	0.0088
130	01123-50835	BOLT	4				0.02	0.044
140	01123-50850	BOLT	6				0.02	0.044
150	04717-01000	WASHER WITH RUBBER	1				0.001	0.0022
160	01774-51010	BOLT FLANGE	1				0.08	0.176

silverhorn.co.uk

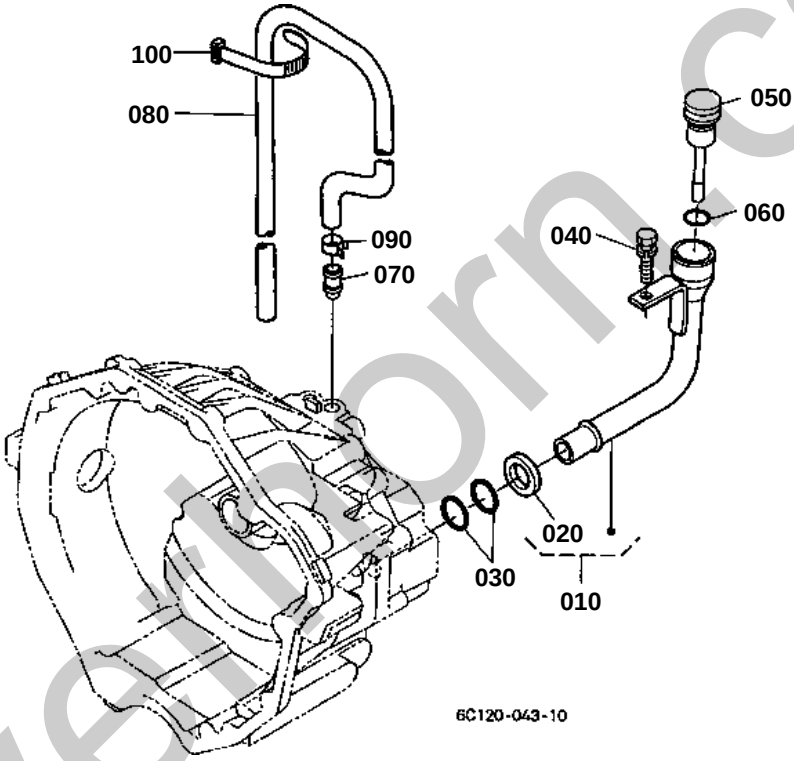

silverthorn.co.uk

CLUTCH DIPSTICK AND GUIDE [HST TYPE]

↔ Interchangeable; ≠ not interchangeable; ← new for old; → old for new

REF.No	Part No.	Description	Q'ty	S.No.	I/C	REMARKS	Weight (kgf)	Weight (lb)
010	6C110-13140	PIPE OIL GAUGE	1				0.11	0.242
020	6C040-13160	RING	1				0.001	0.0022
030	04811-06170	O RING	2				0.001	0.0022
040	01123-50820	BOLT	1				0.011	0.0242
050	6C040-56123	GAUGE OIL	1				0.024	0.0528
060	04811-00180	O RING	1				0.001	0.0022
070	6C110-13190	JOINT	1	<=50750			0	0
070	6C110-13180	JOINT	1	>=50751	≠		0	0
080	6C040-13186	HOSE BREATHER	1				0.21	0.462
090	32721-39160	CLAMP HOSE	1				0.005	0.011
100	55311-41260	BAND CORD	1				0.007	0.0154

silverhorn.co.uk

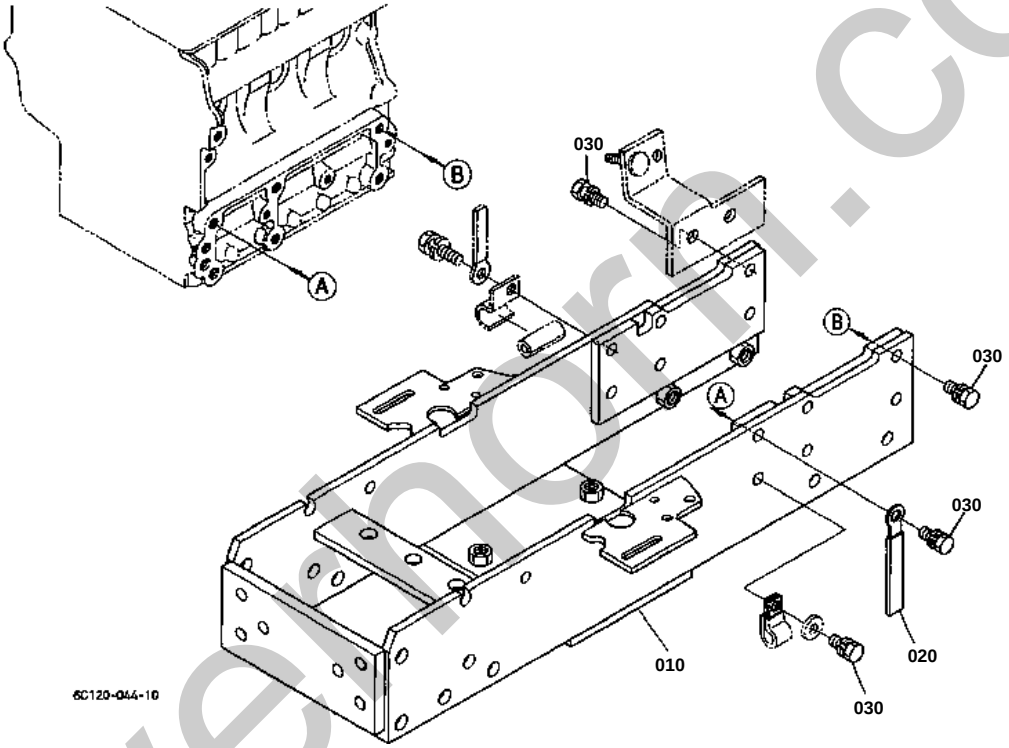

silvermorn.co.uk

FRONT FRAME

↔ Interchangeable; ≠ not interchangeable; ← new for old; → old for new

REF.No	Part No.	Description	Q'ty	S.No.	I/C	REMARKS	Weight (kgf)	Weight (lb)
010	6C090-51210	COMP.FRAME FRONT	1				23.6	51.92
020	35340-29380	CLAMP CORD	1				0.01	0.022
030	01133-51035	BOLT	12	<=50340			0.03	0.066
030	01133-51035	BOLT	11	>=50341			0.03	0.066

silverhorn.co.uk

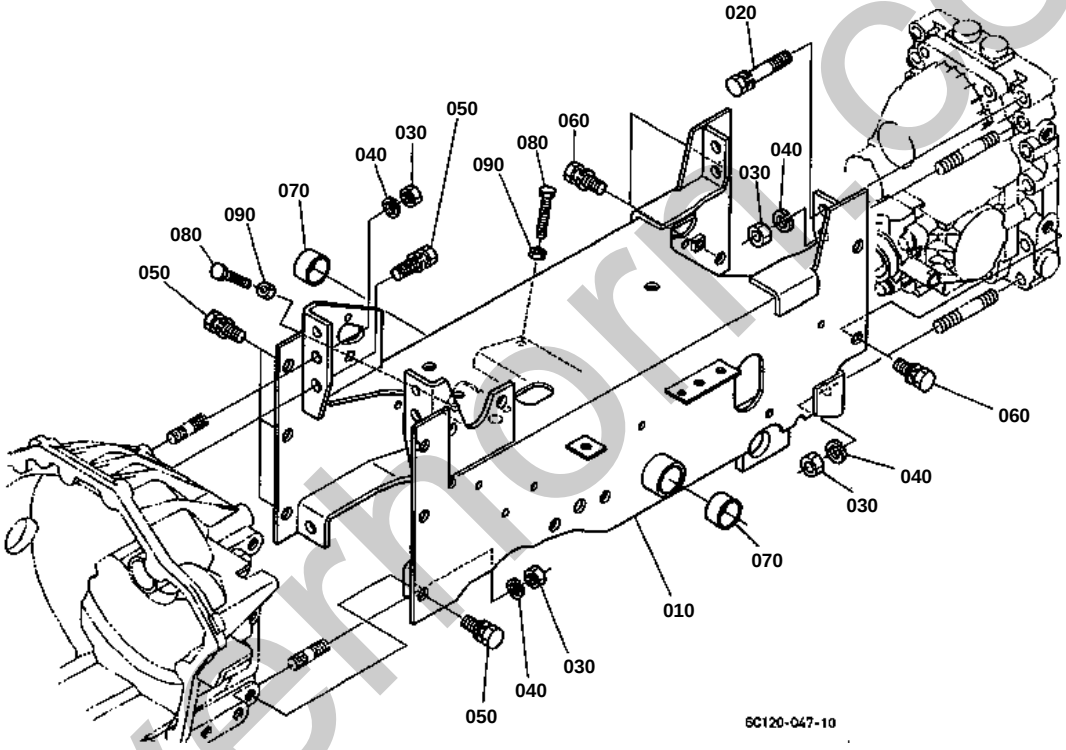

silvermorr.co.uk

CENTER FRAME [HST TYPE]

↔ Interchangeable; ≠ not interchangeable; ← new for old; → old for new

REF.No	Part No.	Description	Q'ty	S.No.	I/C	REMARKS	Weight (kgf)	Weight (lb)
010	6C110-51113	COMP.FRAME CENTER	1				15.7	34.54
020	01123-51265	BOLT	2				0.063	0.1386
030	02174-50120	NUT	8				0.01	0.022
040	04512-60120	WASHER SPRING	8				0.005	0.011
050	01123-51230	BOLT	8				0.04	0.088
060	01123-61225	BOLT	4				0.04	0.088
070	08511-02515	BUSH	2				0.012	0.0264
080	01155-50845	BOLT	2				0.02	0.044
090	02114-50080	NUT	2				0.005	0.011

silverhorn.co.uk

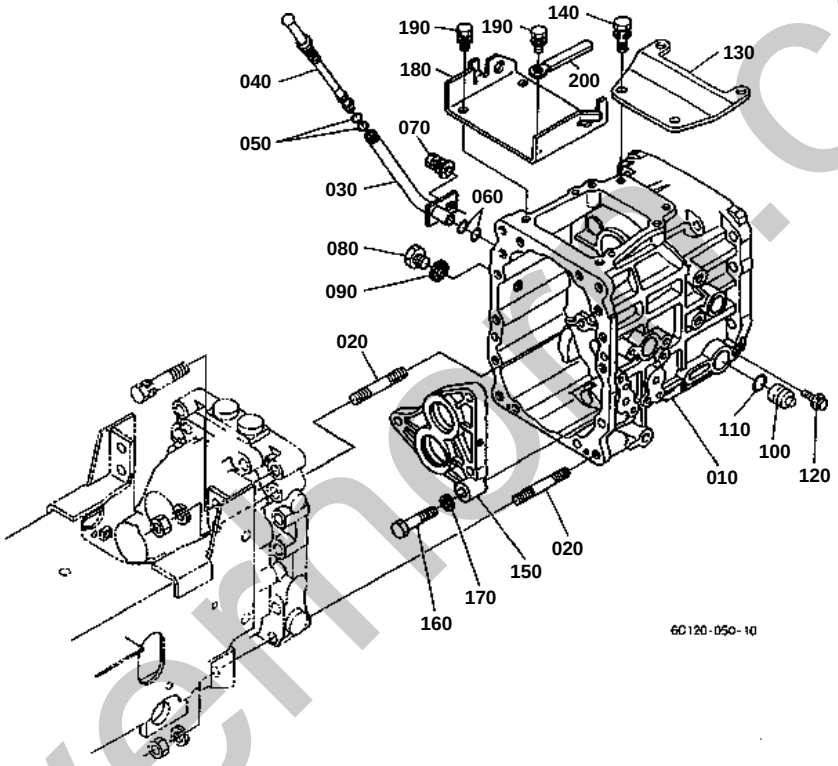

silvermoff.co.uk

TRANSMISSION CASE [HST TYPE]

↔ Interchangeable; ≠ not interchangeable; ← new for old; → old for new

REF.No	Part No.	Description	Q'ty	S.No.	I/C	REMARKS	Weight (kgf)	Weight (lb)
010	6C150-11110	CASE TRANSMISSION	1				0	0
020	01555-51260	STUD	4				0.067	0.1474
030	6A320-11150	PIPE OIL GAUGE	1				0.078	0.1716
040	6C040-11160	GAUGE OIL	1				0.01	0.022
050	04811-10070	O RING	2				0.001	0.0022
060	04811-00120	O RING	2				0.001	0.0022
070	01123-50816	BOLT	1				0.011	0.0242
080	06311-55030	PLUG	1				0.05	0.11
090	04717-01700	WASHER WITH RUBBER	1				0.003	0.0066
100	6C050-11140	PLUG	1				0.075	0.165
110	04811-00200	O RING	1				0.001	0.0022
120	01127-50816	BOLT	1				0.02	0.044
130	6C040-11180	BRACKET	1				0.4	0.88
140	01123-51030	BOLT	2				0.025	0.055
150	6C050-12110	HOLDER BEARING	1				0.23	0.506
160	6C050-12120	BOLT REAMER	3				0.036	0.0792
170	04512-60100	WASHER SPRING	3				0.002	0.0044
180	6C150-12410	COVER UPPER	1				0.76	1.672
190	01123-50820	BOLT	4				0.011	0.0242
200	13824-67580	CLAMP CORD	1				0.006	0.0132

silverhorn.co.uk

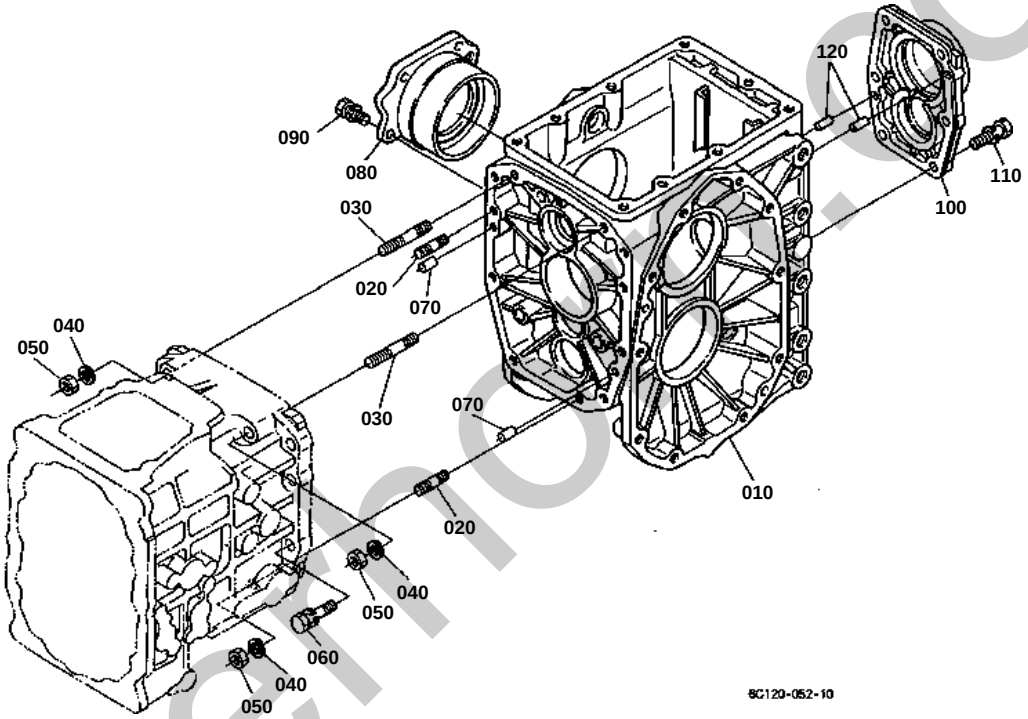

silverhouse.co.uk

DIFFERENTIAL GEAR CASE

↔ Interchangeable; ≠ not interchangeable; ← new for old; → old for new

REF.No	Part No.	Description	Q'ty	S.No.	I/C	REMARKS	Weight (kgf)	Weight (lb)
010	6C040-11174	CASE DIFF.GEAR	1				7.3	16.06
020	01555-51035	STUD	2				0.029	0.0638
030	01555-51065	STUD	2				0.048	0.1056
040	04512-60100	WASHER SPRING	4				0.002	0.0044
050	02176-50100	NUT	4				0.005	0.011
060	01123-51040	BOLT	7				0.03	0.066
070	05012-00614	PIN STRAIGHT	2				0.004	0.0088
080	66611-11812	HOLDER DIFF.BRG.RH	1				0.72	1.584
090	01123-50822	BOLT	4				0.012	0.0264
100	6A100-12213	COVER REAR	1				0.37	0.814
110	01123-51030	BOLT	6				0.025	0.055
120	05012-00614	PIN STRAIGHT	2				0.004	0.0088

silverhorn.co.uk

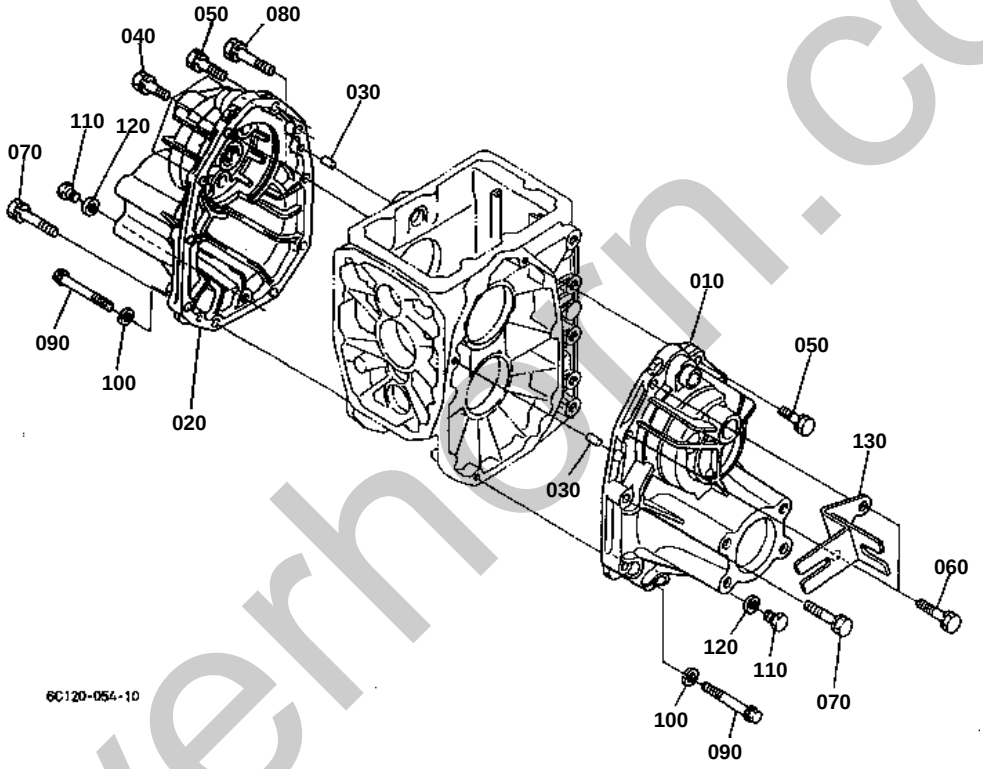

silverhorn.co.uk

REAR AXLE CASE

↔ Interchangeable; ≠ not interchangeable; ← new for old; → old for new

REF.No	Part No.	Description	Q'ty	S.No.	I/C	REMARKS	Weight (kgf)	Weight (lb)
010	K3511-12620	CASE AXLE RH	1			DESCRIPTION LH BUT FOR RH	2.32	5.104
020	K3511-12610	CASE AXLE LH	1			DESCRIPTION RH BUT FOR LH	2.42	5.324
030	05012-00614	PIN STRAIGHT	4				0.004	0.0088
040	01123-51035	BOLT	3				0.025	0.055
050	01123-51035	BOLT	3				0.025	0.055
060	01123-51035	BOLT	2				0.025	0.055
070	01123-51050	BOLT	9				0.035	0.077
080	01123-51050	BOLT	1				0.035	0.077
090	01173-51080	BOLT	2				0.049	0.1078
100	04512-60100	WASHER SPRING	2				0.002	0.0044
110	01774-51212	BOLT FLANGE	2				0	0
120	04717-01200	WASHER WITH RUBBER	2				0.002	0.0044
130	6C120-42650	STAY NEUTRAL SWITCH	1				0.22	0.484

silverhorn.co.uk

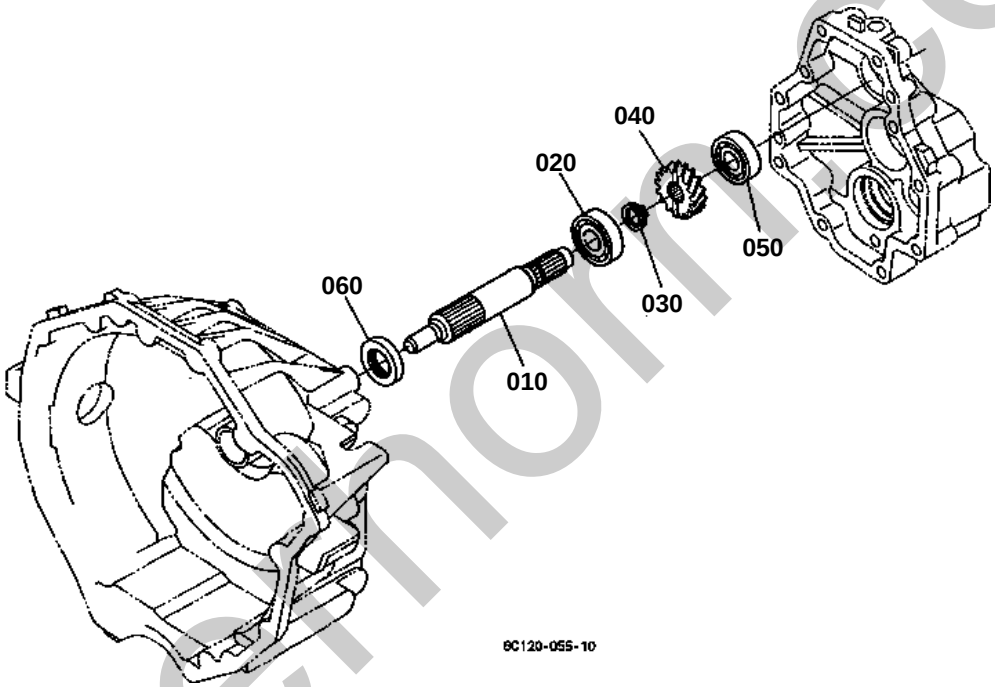

silvernorm.co.uk

CLUTCH SHAFT

↔ Interchangeable; ≠ not interchangeable; ← new for old; → old for new

REF.No	Part No.	Description	Q'ty	S.No.	I/C	REMARKS	Weight (kgf)	Weight (lb)
010	6C040-13514	SHAFT CLUTCH	1				0.5	1.1
020	52300-16180	BEARING	1				0.05	0.11
030	04612-00200	CIR CLIP EXTERNAL	1				0.001	0.0022
040	6C110-13520	GEAR	1			15T	0.16	0.352
050	08101-06203	BEARING BALL	1				0.063	0.1386
060	6C040-13530	SEAL OIL	1				0.012	0.0264

silverhorn.co.uk

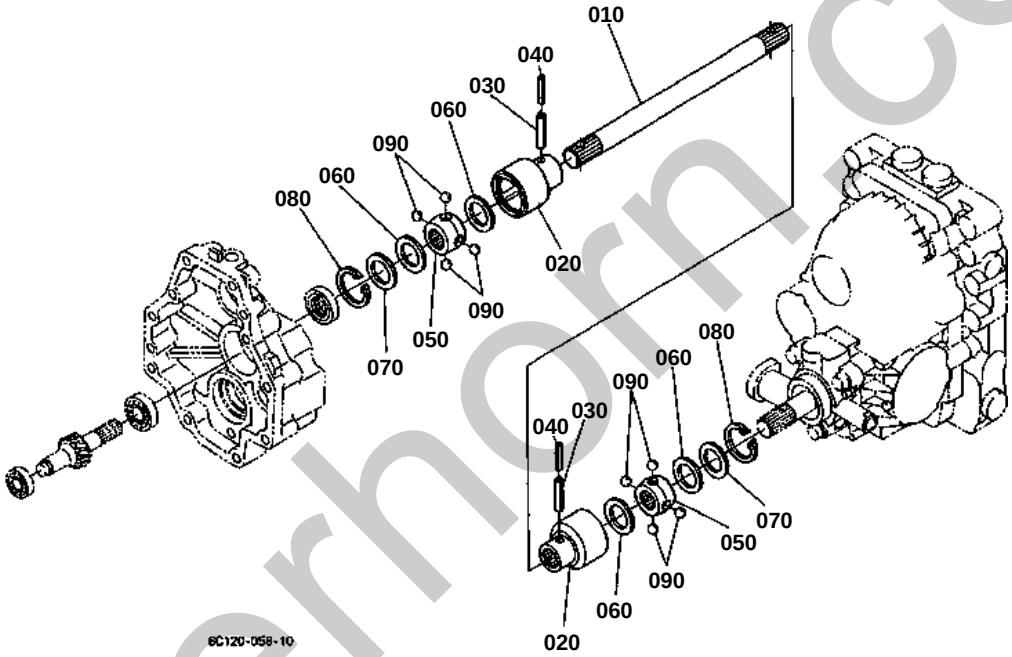

silverhorn.co.uk

PROPELLER SHAFT [HST TYPE]

↔ Interchangeable; ≠ not interchangeable; ← new for old; → old for new

REF.No	Part No.	Description	Q'ty	S.No.	I/C	REMARKS	Weight (kgf)	Weight (lb)
010	6C050-13723	SHAFT PROPELLER	1				0.64	1.408
020	67111-13710	COUPLING BALL OUTER	2				0.225	0.495
030	05411-00640	PIN SPRING	2				0.006	0.0132
040	32721-57680	PIN SPRING	2				0.002	0.0044
050	67211-14133	COUPLING BALL INNER	2				0.075	0.165
060	67111-13730	GASKET BALL JOINT	4				0.002	0.0044
070	67111-13740	SUPPORT GASKET	2				0.004	0.0088
080	04611-00350	CIR CLIP INTERNAL	2				0.003	0.0066
090	07715-00803	BALL	8				0.004	0.0088

silverhorn.co.uk

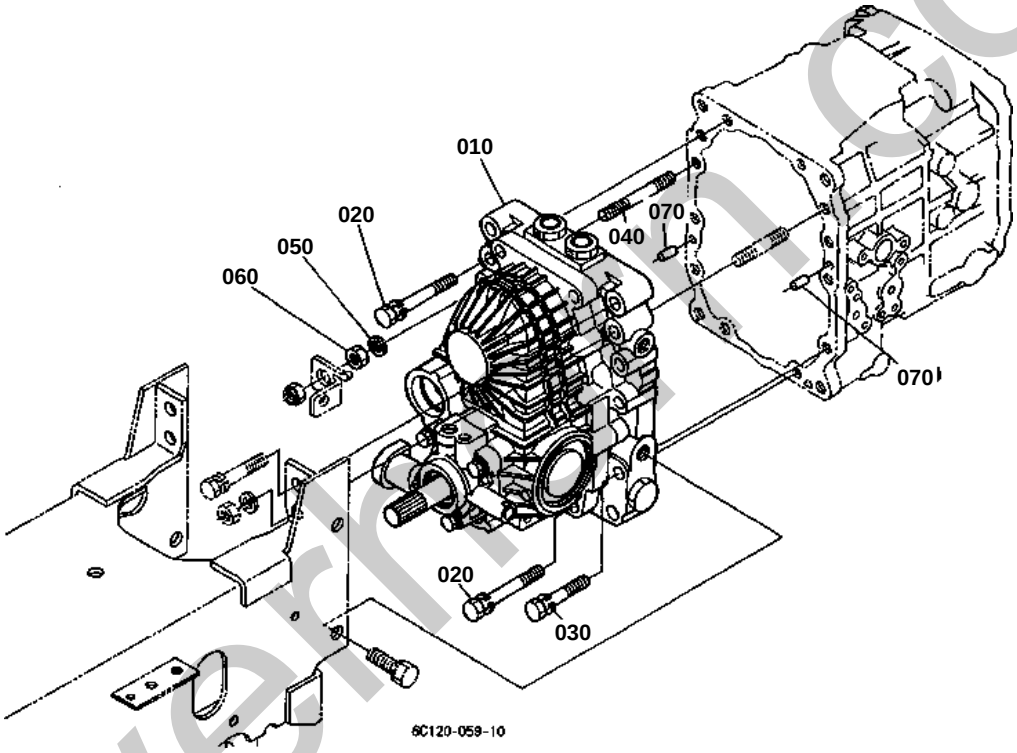

silverhill.co.uk

↔ Interchangeable; ≠ not interchangeable; ← new for old; → old for new

REF.No	Part No.	Description	Q'ty	S.No.	I/C	REMARKS	Weight (kgf)	Weight (lb)
010	6C150-11600	ASSY HST	1	<=50431		REFER TO L.No.G06-L FOR COMP.	16	35.2
010	6C150-11602	ASSY HST	1	>=50432	←	REFER TO L.No.G06-L FOR COMP.	0	0
010	6C150-11603	ASSY HST	1	>=50590	←	REFER TO L.No.G06-L FOR COMP.	0	0
020	01123-51075	BOLT	4				0.05	0.11
030	01123-51055	BOLT	5				0.038	0.0836
040	6C050-11690	STUD	1				0.043	0.0946
050	04512-60100	WASHER SPRING	1				0.002	0.0044
060	02176-50100	NUT	1				0.005	0.011
070	05012-00614	PIN STRAIGHT	2				0.004	0.0088

silverhorn.co.uk

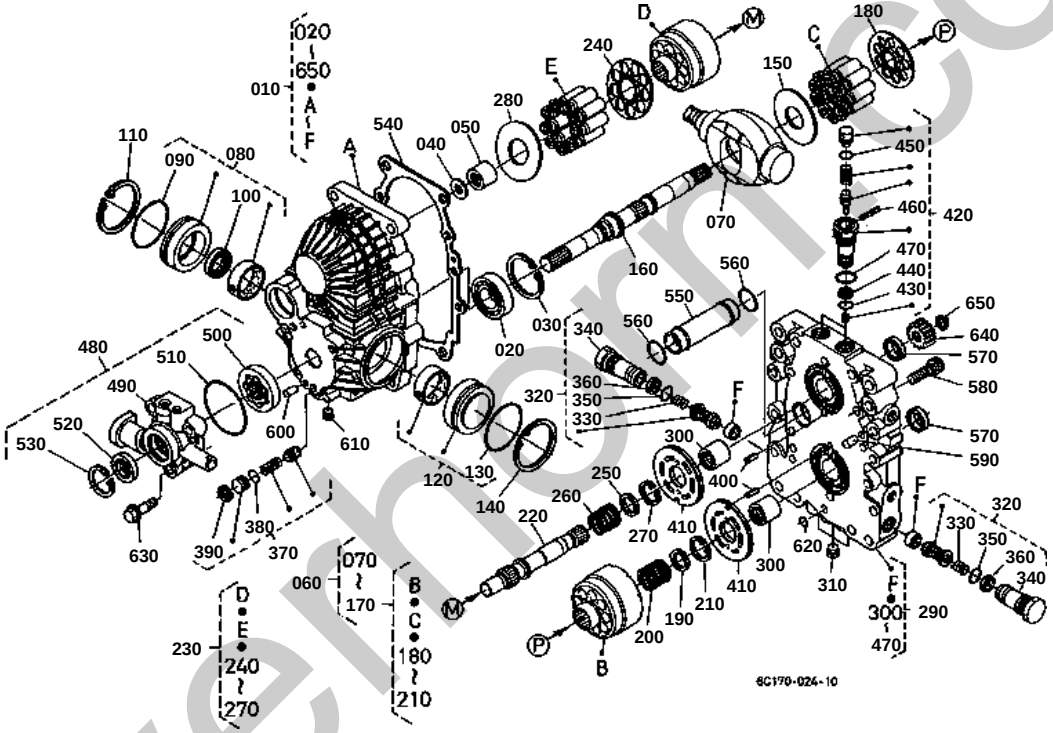

silverhorn.co.uk

↔ Interchangeable; ≠ not interchangeable; ← new for old; → old for new

REF.No	Part No.	Description	Q'ty	S.No.	I/C	REMARKS	Weight (kgf)	Weight (lb)
010	6C150-11600	ASSY HST	1	<=50431			16	35.2
010	6C150-11602	ASSY HST	1	>=50432	←		0	0
010	6C150-11603	ASSY HST	1	>=50590	←		0	0
020	37410-57190	BEARING BALL	1				0.14	0.308
030	04611-00520	CIR CLIP INTERNAL	1				0.009	0.0198
040	6A110-35240	COLLAR	1				0.002	0.0044
050	6A110-35122	BEARING NEEDLE	1				0.023	0.0506
060	32721-35010	ASSY PUMP	1				3.6	7.92
070	32721-35130	PLATE	1				1.02	2.244
080	6A110-35020	ASSY COVER A	1				0.24	0.528
090	04811-50550	O RING	1				0.002	0.0044
100	6A110-35140	SEAL OIL	1				0.009	0.0198
110	04611-00620	CIR CLIP INTERNAL	1				0.011	0.0242
120	6A110-35030	ASSY COVER B	1				0.24	0.528
130	04811-50550	O RING	1				0.002	0.0044
140	04611-00620	CIR CLIP INTERNAL	1				0.011	0.0242
150	32721-35150	COLLAR THRUST	1				0.026	0.0572
160	32721-35160	SHAFT	1				0.62	1.364
170	32721-35040	ASSY BLOCK CYL.	1				1.09	2.398
180	32721-35180	PLATE RETAINER	1				0.02	0.044
190	66415-39240	HOLDER SPRING	1				0.004	0.0088
200	66415-39250	SPRING	1				0.005	0.011
210	66415-39470	CIR CLIP INTERNAL	1				0.02	0.044
220	32721-35230	SHAFT	1				0.35	0.77
230	32721-35070	ASSY BLOCK CYL.	1				1.09	2.398
240	32721-35180	PLATE RETAINER	1				0.02	0.044
250	66415-39240	HOLDER SPRING	1				0.004	0.0088
260	66415-39250	SPRING	1				0.005	0.011
270	66415-39470	CIR CLIP INTERNAL	1				0.02	0.044
280	32721-35150	COLLAR THRUST	1				0.026	0.0572
290	6C070-11700	ASSY COVER PORTBLOCK	1				8	17.6
300	K7001-39030	BEARING NEEDLE	2				0.2	0.44
310	K7001-39620	PLUG	3				0.005	0.011
320	32721-35400	ASSY VALVE RELIEF	2				0.06	0.132
330	66415-83860	SPRING	2				0.002	0.0044
340	35270-16650	PLUG	2				0.02	0.044
350	04810-00150	O RING	2				0.001	0.0022
360	32721-35280	RING BACK UP	2				0.001	0.0022
370	32721-35200	ASSY VALVE RELIEF	1				0.022	0.0484
380	04810-00120	O RING	1				0.001	0.0022
390	04611-00170	CIR CLIP INTERNAL	1				0.001	0.0022
400	05411-00414	PIN SPRING	2				0.001	0.0022
410	K7001-39920	PLATE VALVE	2				0.13	0.286
420	6C070-11650	ASSY VALVE NUETRAL	2				0.1	0.22
430	04810-00120	O RING	2				0.001	0.0022
440	66363-39630	RING BACK UP	2				0.001	0.0022
450	04810-00100	O RING	2				0.001	0.0022
460	05411-00325	PIN SPRING	2				0.001	0.0022
470	04811-00180	O RING	2				0.001	0.0022
480	6C150-35300	ASSY PUMP	1	<=50589			0.44	0.968
480	6C150-35302	ASSY PUMP	1	>=50590	←		0	0
490	6C150-35350	CASE CHARGE PUMP	1	<=50589			0.29	0.638
490	6C150-35352	CASE CHARGE PUMP	1	>=50590	←		0	0
500	6A000-39820	ROTOR	1				0.148	0.3256
510	04811-06630	O RING	1				0.001	0.0022
520	66363-39560	SEAL OIL	1				0.01	0.022

silverthorn.co.uk

↔ Interchangeable; ≠ not interchangeable; ← new for old; → old for new

REF.No	Part No.	Description	Q'ty	S.No.	I/C	REMARKS	Weight (kgf)	Weight (lb)
530	04611-00350	CIR CLIP INTERNAL	1				0.003	0.0066
540	32721-35360	GASKET	1				0.005	0.011
550	32721-35373	PIPE	1				0.09	0.198
560	04811-00250	O RING	2				0.001	0.0022
570	32721-35380	SEAL OIL	2				0.002	0.0044
580	01311-11035	BOLT HEX-SOC-HD	6				0.03	0.066
590	05012-00814	PIN STRAIGHT	2				0.006	0.0132
600	05012-00614	PIN STRAIGHT	2				0.004	0.0088
610	32721-35450	PLUG	1				0.002	0.0044
620	04810-00100	O RING	1				0.001	0.0022
630	01754-50830	BOLT FLANGE	3				0.01	0.022
640	6C050-14290	GEAR	1				0.115	0.253
650	04612-00180	CIR CLIP EXTERNAL	1				0.001	0.0022

silverhorn.co.uk

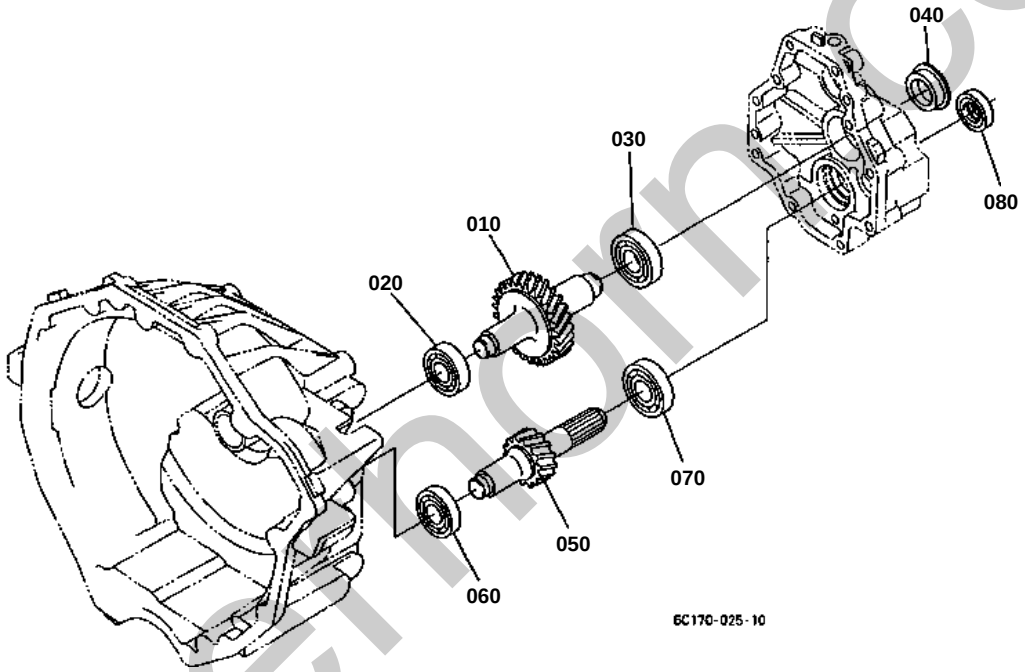

silvernorm.co.uk

FRONT SHAFT [HST TYPE]

↔ Interchangeable; ≠ not interchangeable; ← new for old; → old for new

REF.No	Part No.	Description	Q'ty	S.No.	I/C	REMARKS	Weight (kgf)	Weight (lb)
010	6C150-13610	SHAFT FRONT	1			27T	0.94	2.068
020	67211-14220	BEARING BALL	1				0.07	0.154
030	08101-06204	BEARING BALL	1				0.102	0.2244
040	6A100-12180	PLUG	1				0.022	0.0484
050	6C110-13710	SHAFT FRONT	1			15T	0.46	1.012
060	08101-06203	BEARING BALL	1				0.063	0.1386
070	52300-16180	BEARING	1				0.05	0.11
080	66363-39560	SEAL OIL	1				0.01	0.022

silverhorn.co.uk

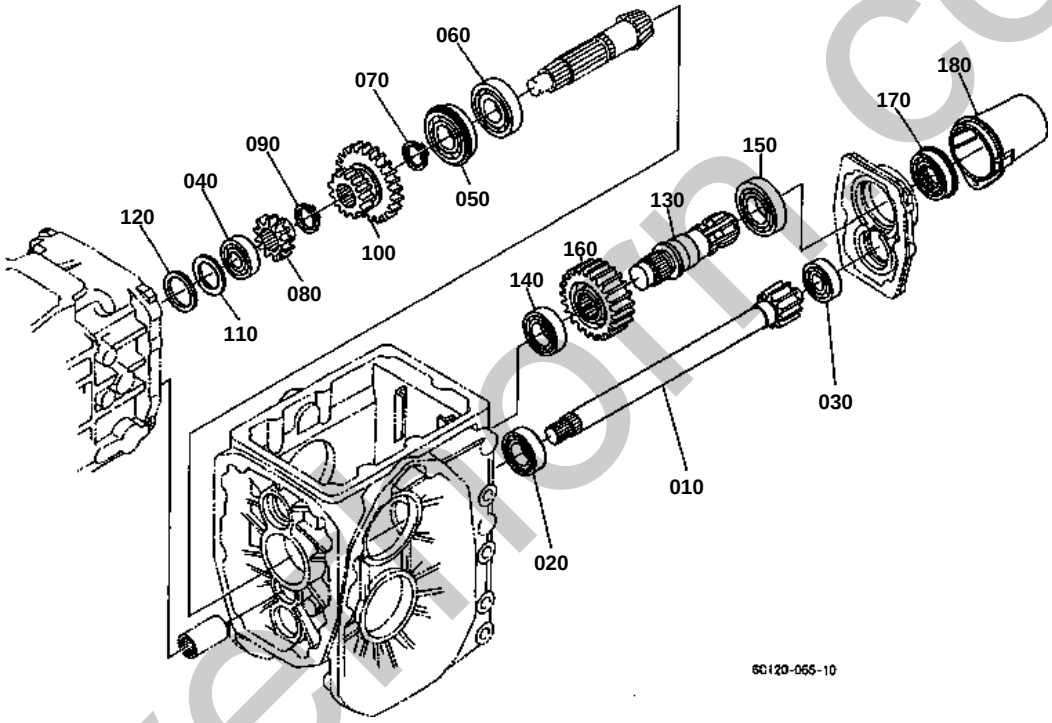

silverthorn.co.uk

PTO SHAFT [HST TYPE]

↔ Interchangeable; ≠ not interchangeable; ← new for old; → old for new

REF.No	Part No.	Description	Q'ty	S.No.	I/C	REMARKS	Weight (kgf)	Weight (lb)
010	6C050-14510	GEAR-SHAFT	1			11T	1.025	2.255
020	67121-56770	BEARING BALL	1				0.127	0.2794
030	67955-14170	BEARING BALL	1				0.114	0.2508
040	08221-07303	BEARING BALL	1				0.116	0.2552
050	38430-21590	BEARING BALL	1				0.25	0.55
060	64441-22170	BEARING BALL	1				0.24	0.528
070	32721-14660	CIR CLIP EXTERNAL	1				0.005	0.011
080	6C040-14650	GEAR 4WD	1			13T	0.093	0.2046
090	04612-00250	CIR CLIP EXTERNAL	1				0.002	0.0044
100	6C050-14620	GEAR	1			15-29T	0.425	0.935
110	66591-14720	SPACER	1				0.002	0.0044
120	66611-14670	SHIM	1			1.40MM	0.008	0.0176
120	66611-14680	SHIM	1			1.80MM	0.01	0.022
120	66611-14690	SHIM	1			0.20MM	0.001	0.0022
130	37410-16510	SHAFT PTO	1				0.79	1.738
140	67121-56770	BEARING BALL	1				0.127	0.2794
150	6C040-14730	BEARING BALL	1				0.15	0.33
160	6C040-14720	GEAR	1			24T	0.68	1.496
170	37410-16550	SEAL OIL	1				0.03	0.066
180	37410-63112	CAP PTO SHAFT	1				0.055	0.121

silverhorn.co.uk

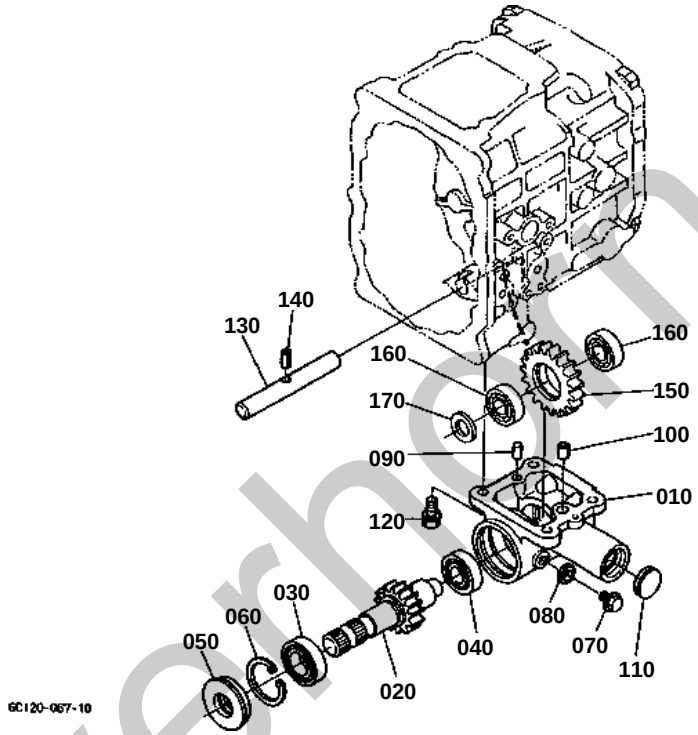

silverhorn.co.uk

MID PTO [HST TYPE]

↔ Interchangeable; ≠ not interchangeable; ← new for old; → old for new

REF.No	Part No.	Description	Q'ty	S.No.	I/C	REMARKS	Weight (kgf)	Weight (lb)
010	6C090-21210	CASE MID PTO	1				0.508	1.1176
020	6C090-21230	SHAFT GEAR	1			11T	0.54	1.188
030	08101-06205	BEARING BALL	1				0.14	0.308
040	08101-06204	BEARING BALL	1				0.102	0.2244
050	32430-25540	SEAL OIL MID PTO	1				0.04	0.088
060	04611-00520	CIR CLIP INTERNAL	1				0.009	0.0198
070	01774-51212	BOLT FLANGE	1				0	0
080	04717-01200	WASHER WITH RUBBER	1				0.002	0.0044
090	05012-00614	PIN STRAIGHT	1				0.004	0.0088
100	66116-11190	PIPE KNOCK	1				0.002	0.0044
110	16241-96262	PLUG FUEL CAMSHAFT	1				0.007	0.0154
120	01123-51035	BOLT	4				0.025	0.055
130	6C090-21250	SHAFT IDLE	1				0.22	0.484
140	05411-00616	PIN SPRING	1				0.002	0.0044
150	6C120-21220	GEAR M-PTO	1			19T	0.3	0.66
160	6C120-21230	BEARING BALL	2				0.038	0.0836
170	41142-43470	COLLAR THRUST	1				0.005	0.011

silverhorn.co.uk

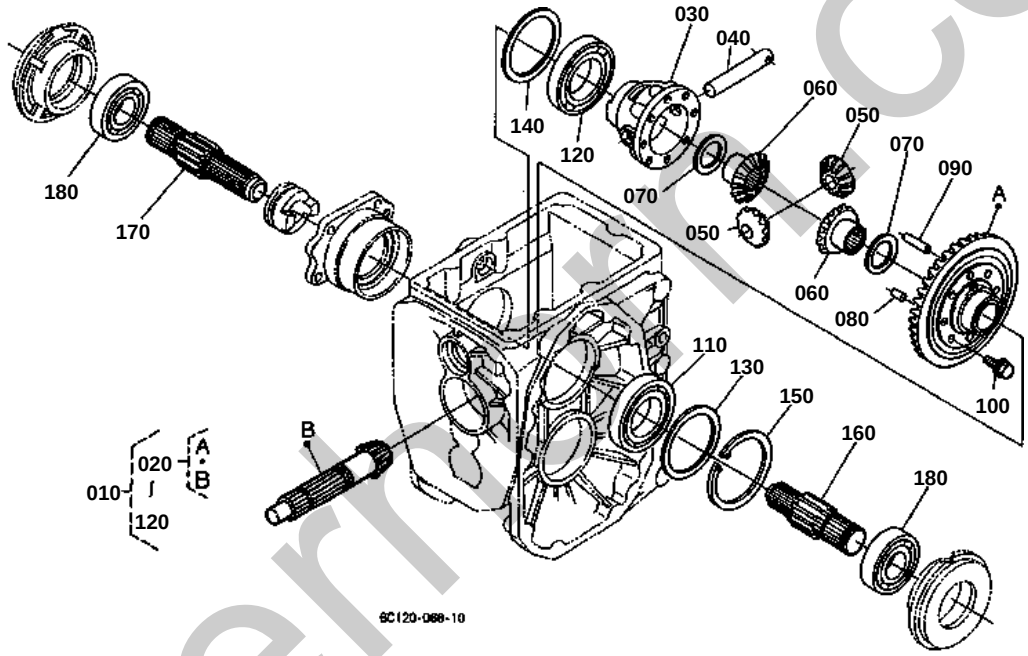

silvermart.co.uk

REAR DIFFERENTIAL

↔ Interchangeable; ≠ not interchangeable; ← new for old; → old for new

REF.No	Part No.	Description	Q'ty	S.No.	I/C	REMARKS	Weight (kgf)	Weight (lb)
010	6C140-97910	ASSY DIFFERENTIAL	1				0	0
020	6C040-97920	ASSY GEAR BEVEL	1			6-37T	1.97	4.334
030	6C040-14970	CASE DIFFERENTIAL	1				0.7	1.54
040	67711-14912	SHAFT DIFF.PINION	1				0.14	0.308
050	67711-14920	PINION DIFF.	2			12T	0.11	0.242
060	6C040-14930	GEAR DIFF.SIDE	2			14T	0.165	0.363
070	67211-15170	SHIM	2			0.80MM	0.008	0.0176
070	67211-15160	SHIM	2			1.00MM	0.01	0.022
070	67211-15180	SHIM	2			1.20MM	0.01	0.022
080	66591-14792	PIN KNOCK	1				0.003	0.0066
090	66591-14783	PIN STRAIGHT	1				0.01	0.022
100	67810-56680	BOLT UBS	6				0.013	0.0286
110	6C140-14990	BEARING BALL	1				0	0
120	6C140-14980	BEARING BALL	1				0	0
130	66591-14990	SHIM DIFF.SIDE	1			0.20MM	0.002	0.0044
130	66591-14980	SHIM DIFF.SIDE	1			0.50MM	0.005	0.011
140	66611-15150	SHIM DIFF.SIDE	1			0.20MM	0.002	0.0044
140	66611-15140	SHIM DIFF.SIDE	1			0.50MM	0.006	0.0132
150	04611-00750	CIR CLIP INTERNAL	1				0.019	0.0418
160	6C040-14940	SHAFT DIFF.GEAR LH	1				0.62	1.364
170	6C040-14950	SHAFT DIFF.GEAR RH	1				0.72	1.584
180	08101-06306	BEARING BALL	2				0.335	0.737

silverhorn.co.uk

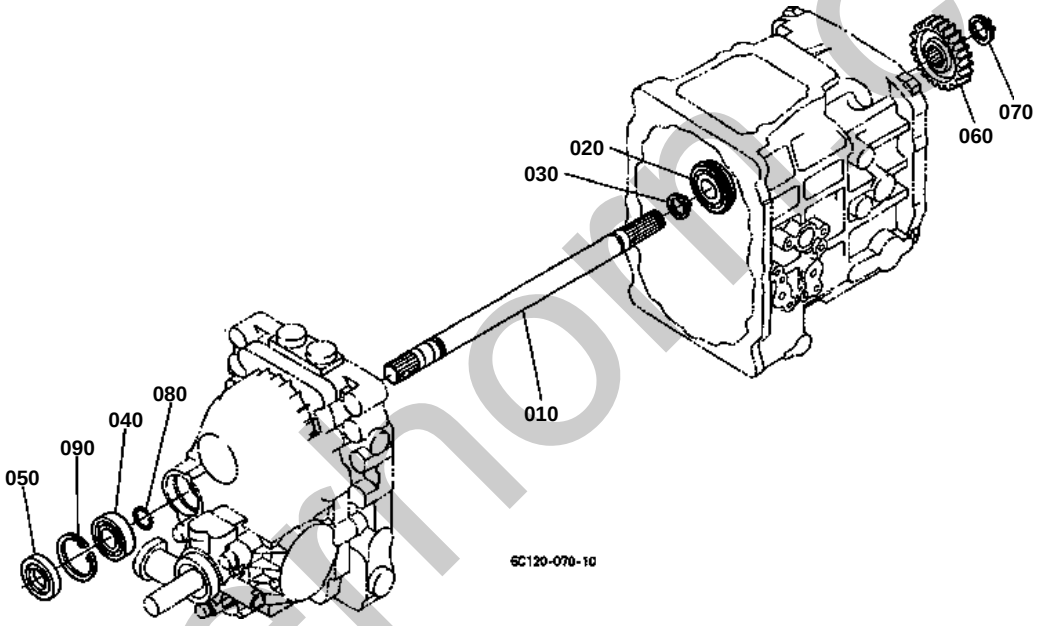

silvermoor.co.uk

FRONT WHEEL PROPELLER SHAFT [HST TYPE]

↔ Interchangeable; ≠ not interchangeable; ← new for old; → old for new

REF.No	Part No.	Description	Q'ty	S.No.	I/C	REMARKS	Weight (kgf)	Weight (lb)
010	32721-14810	SHAFT 4WD	1				0.84	1.848
020	08151-06204	BEARING BALL	1				0.11	0.242
030	04612-00200	CIR CLIP EXTERNAL	1				0.001	0.0022
040	52300-21660	BEARING	1				0.07	0.154
050	09500-20428	SEAL OIL	1				0.012	0.0264
060	6C040-14840	GEAR 4WD	1			20T	0.23	0.506
070	04612-00190	CIR CLIP EXTERNAL	1				0.001	0.0022
080	6C050-14850	CIR CLIP EXTERNAL	1				0.001	0.0022
090	04611-00420	CIR CLIP INTERNAL	1				0.006	0.0132

silverhorn.co.uk

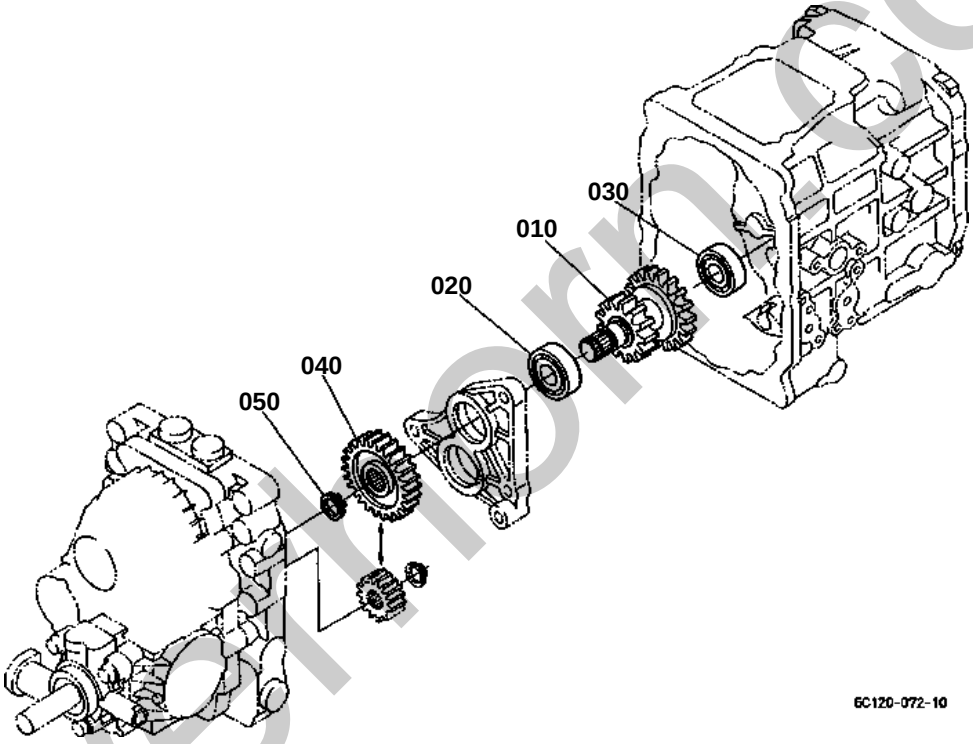

silverthorn.co.uk

2ND SHAFT [HST TYPE]

↔ Interchangeable; ≠ not interchangeable; ← new for old; → old for new

REF.No	Part No.	Description	Q'ty	S.No.	I/C	REMARKS	Weight (kgf)	Weight (lb)
010	6C090-14210	GEAR-SHAFT	1			13-18T	0.8	1.76
020	52300-16180	BEARING	1				0.05	0.11
030	61361-14280	BEARING BALL	1				0.09	0.198
040	6C050-14280	GEAR	1			27T	0.32	0.704
050	04612-00190	CIR CLIP EXTERNAL	1				0.001	0.0022

silverhorn.co.uk

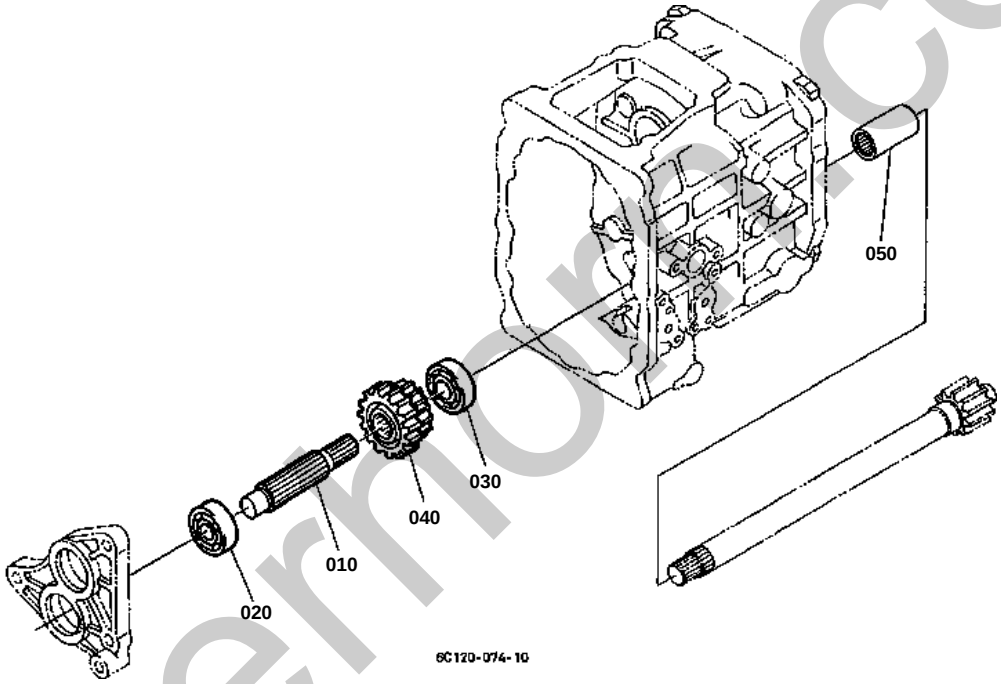

silvermoria.co.uk

3RD SHAFT [HST TYPE]

↔ Interchangeable; ≠ not interchangeable; ← new for old; → old for new

REF.No	Part No.	Description	Q'ty	S.No.	I/C	REMARKS	Weight (kgf)	Weight (lb)
010	6C090-14310	SHAFT	1				0.35	0.77
020	08101-06204	BEARING BALL	1				0.102	0.2244
030	08101-06304	BEARING BALL	1				0.146	0.3212
040	6C090-14320	GEAR	1			17-13T	0.44	0.968
050	6C050-14520	COUPLING	1				0.099	0.2178

silverhorn.co.uk

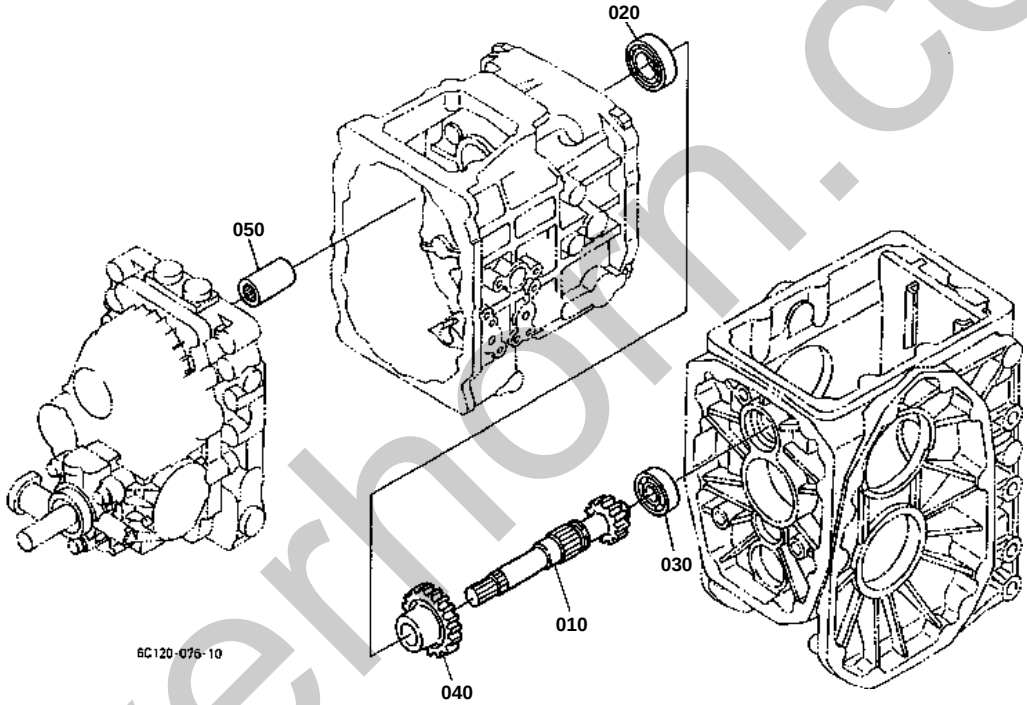

silverhorn.co.uk

4TH SHAFT [HST TYPE]

↔ Interchangeable; ≠ not interchangeable; ← new for old; → old for new

REF.No	Part No.	Description	Q'ty	S.No.	I/C	REMARKS	Weight (kgf)	Weight (lb)
010	6C050-14410	GEAR-SHAFT	1			14T	0.635	1.397
020	08101-06205	BEARING BALL	1				0.14	0.308
030	61361-14280	BEARING BALL	1				0.09	0.198
040	6C050-14450	GEAR	1			18T	0.28	0.616
050	6C050-14520	COUPLING	1				0.099	0.2178

silverhorn.co.uk

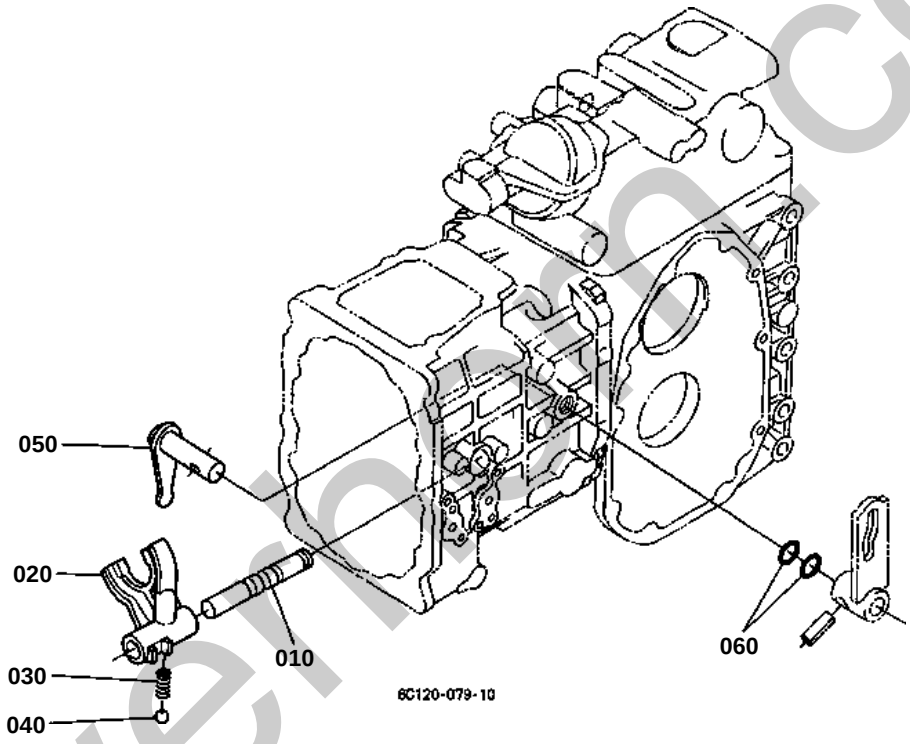

silvermoon.co.uk

RANGE GEAR SHIFT FORK [HST TYPE]

↔ Interchangeable; ≠ not interchangeable; ← new for old; → old for new

REF.No	Part No.	Description	Q'ty	S.No.	I/C	REMARKS	Weight (kgf)	Weight (lb)
010	6C050-18410	ROD FORK	1				0.118	0.2596
020	6C040-18420	FORK RANGE SHIFT	1				0.079	0.1738
030	62061-18260	SPRING STOPPER	1				0.002	0.0044
040	07715-01605	BALL	1				0.003	0.0066
050	6C040-18510	ARM RANGE SHIFT	1				0.075	0.165
060	04811-00160	O RING	2				0.001	0.0022

silverhorn.co.uk

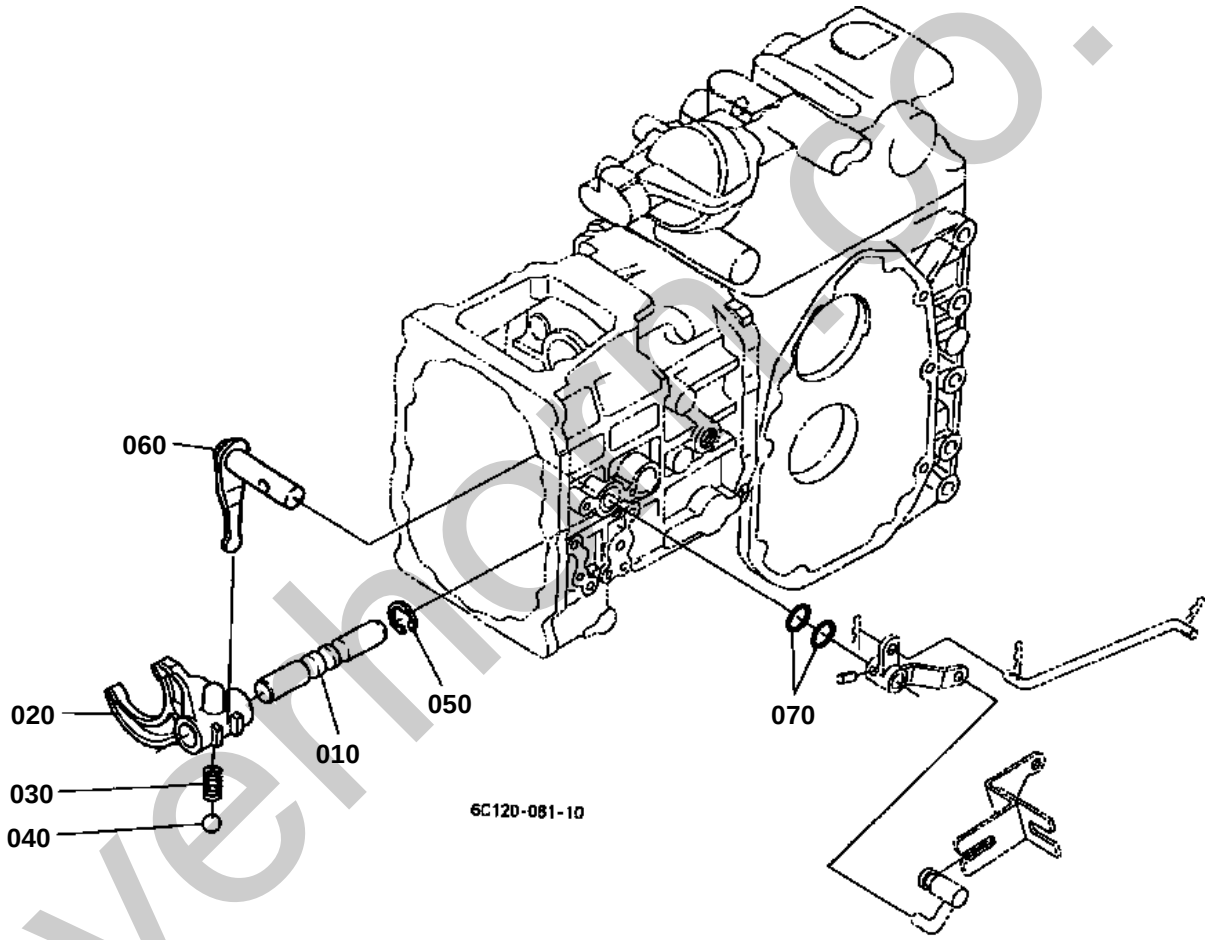

silverhorse.co.uk

PTO GEAR SHIFT FORK [HST TYPE]

↔ Interchangeable; ≠ not interchangeable; ← new for old; → old for new

REF.No	Part No.	Description	Q'ty	S.No.	I/C	REMARKS	Weight (kgf)	Weight (lb)
010	6C090-18612	ROD FORK	1				0.11	0.242
020	6C090-18620	FORK PTO SHIFT	1				0.09	0.198
030	62061-18260	SPRING STOPPER	1				0.002	0.0044
040	07715-01605	BALL	1				0.003	0.0066
050	04613-50120	CIR CLIP EXTERNAL	1				0.001	0.0022
060	6C040-18710	ARM PTO SHIFT	1				0.155	0.341
070	04811-00160	O RING	2				0.001	0.0022

silverhorn.co.uk

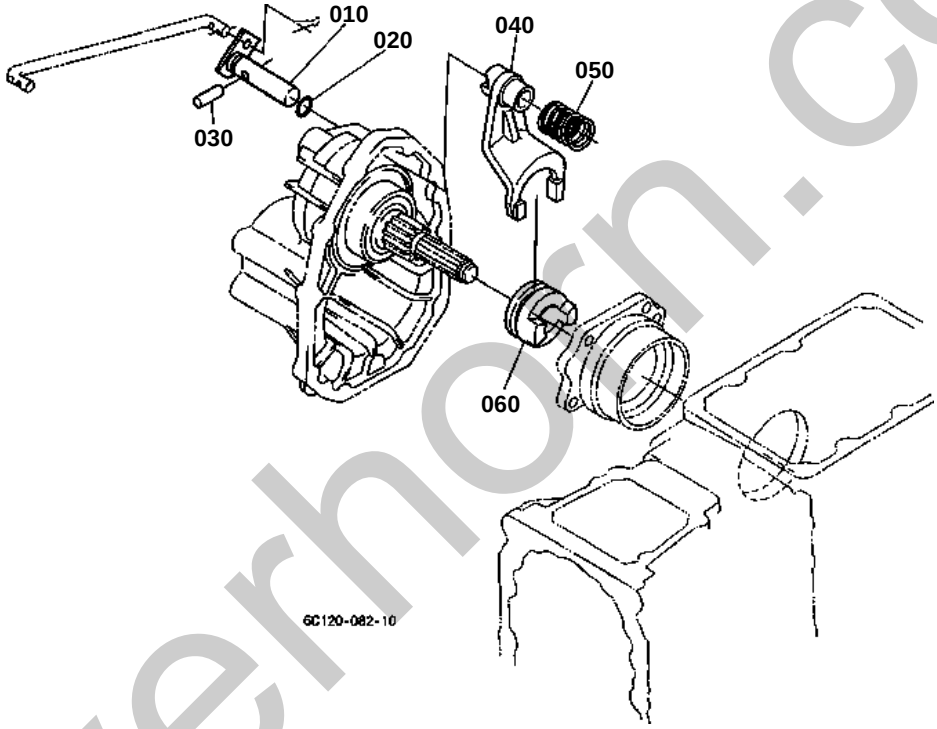

silverhorn.co.uk

DIFFERENTIAL LOCK SHIFT FORK

↔ Interchangeable; ≠ not interchangeable; ← new for old; → old for new

REF.No	Part No.	Description	Q'ty	S.No.	I/C	REMARKS	Weight (kgf)	Weight (lb)
010	6C040-19120	ROD FORK	1				0.17	0.374
020	04811-06120	O RING	1				0.001	0.0022
030	6A100-19130	PIN	1				0.017	0.0374
040	6C040-19110	FORK DIFF.LOCK SHIFT	1				0.22	0.484
050	6C040-19130	SPRING	1				0.014	0.0308
060	66611-15130	CLUTCH DIFF.LOCK	1				0.2	0.44

silverhorn.co.uk

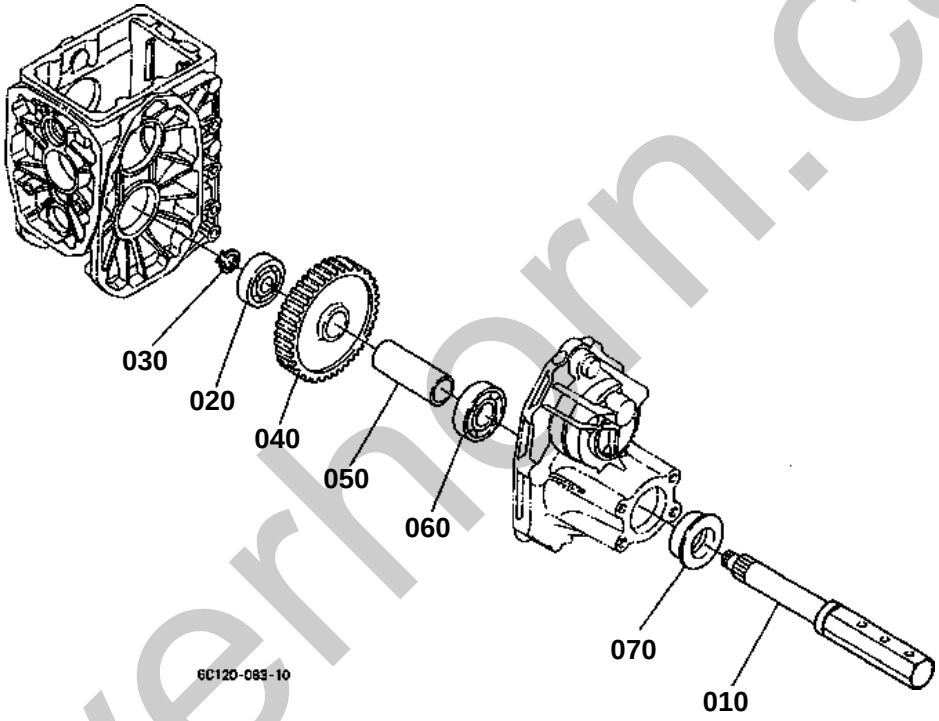

silverhorn.co.uk

REAR AXLE

↔ Interchangeable; ≠ not interchangeable; ← new for old; → old for new

REF.No	Part No.	Description	Q'ty	S.No.	I/C	REMARKS	Weight (kgf)	Weight (lb)
010	66611-17114	AXLE REAR	2				4.64	10.208
020	08101-06306	BEARING BALL	2				0.335	0.737
030	04612-00300	CIR CLIP EXTERNAL	2				0.003	0.0066
040	6C040-17130	GEAR	2			57T	2.55	5.61
050	6C040-17140	COLLAR	2				0.26	0.572
060	08101-06208	BEARING BALL	2				0.355	0.781
070	09500-00014	SEAL OIL	2				0.06	0.132

silverhorn.co.uk

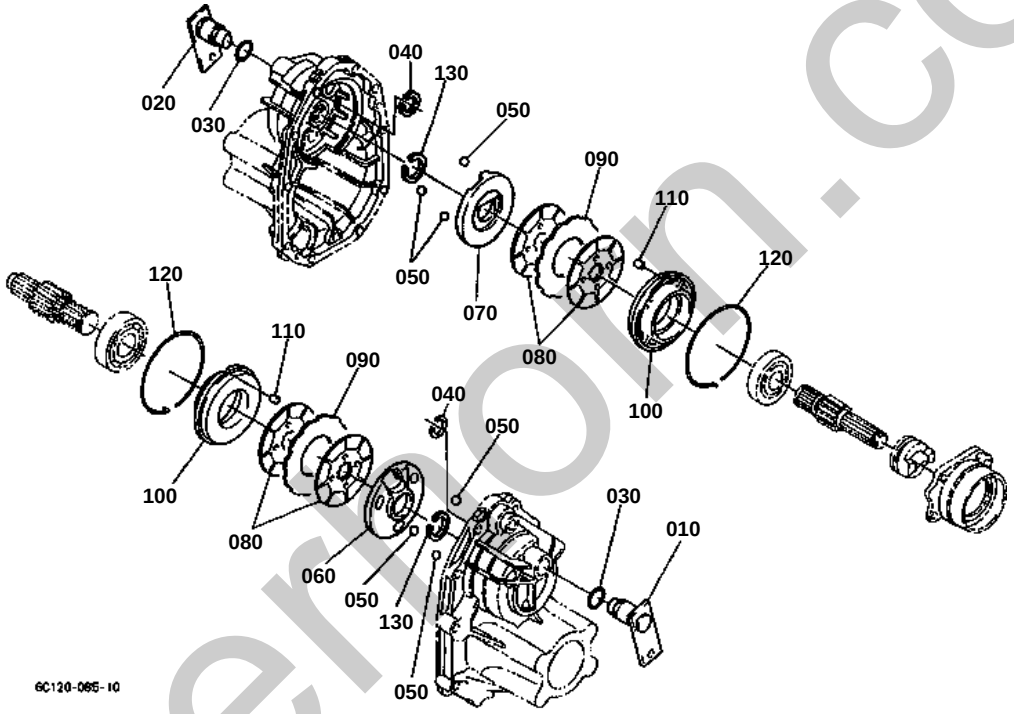

silvermoln.co.uk

↔ Interchangeable; ≠ not interchangeable; ← new for old; → old for new

REF.No	Part No.	Description	Q'ty	S.No.	I/C	REMARKS	Weight (kgf)	Weight (lb)
010	6C040-22360	LEVER CAM LH	1				0.32	0.704
020	6C040-22460	LEVER CAM RH	1				0.33	0.726
030	04811-00210	O RING	2				0.001	0.0022
040	67061-14370	CIR-CLIP	2				0.002	0.0044
050	07715-00805	BALL	6				0.016	0.0352
060	6C090-22320	ACTUATOR LH	1				0.63	1.386
070	6C090-22420	ACTUATOR RH	1				0.63	1.386
080	6C140-22350	DISK BRAKE	4				0.18	0.396
090	6C140-22340	PLATE FRICTION	2				0.12	0.264
100	6C110-22380	HOLDER BEARING	2				1.02	2.244
110	6C040-22440	PIN	2				0.004	0.0088
120	6A320-22390	CIR-CLIP INTERNAL	2				0.038	0.0836
130	70435-51590	CIR-CLIP	2				0.002	0.0044

silverhorn.co.uk

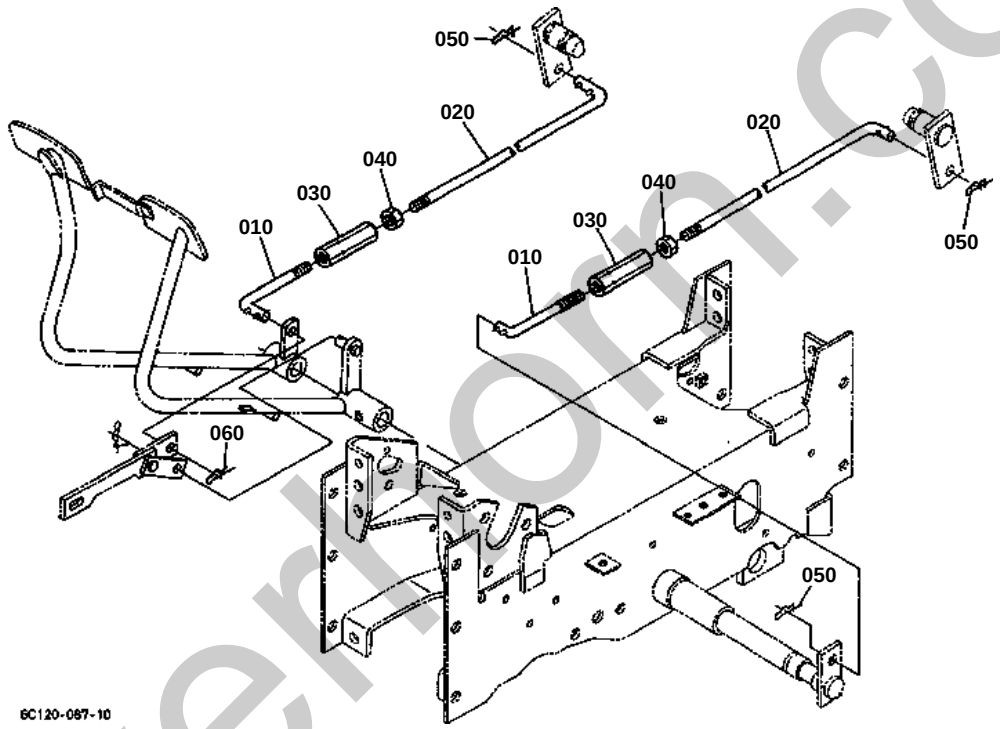

silverthorn.co.uk

BRAKE ROD 1 [HST TYPE]

↔ Interchangeable; ≠ not interchangeable; ← new for old; → old for new

REF.No	Part No.	Description	Q'ty	S.No.	I/C	REMARKS	Weight (kgf)	Weight (lb)
010	6C040-42350	ROD BRAKE FRONT	2				0.068	0.1496
020	6C040-42360	ROD BRAKE REAR	2				0.23	0.506
030	6C040-42370	TURNBUCKLE	2				0.06	0.132
040	02118-50100	NUT	2				0.005	0.011
050	6C040-42390	PIN SNAP	3				0.002	0.0044
060	05525-61000	PIN SNAP	1				0.002	0.0044

silverhorn.co.uk

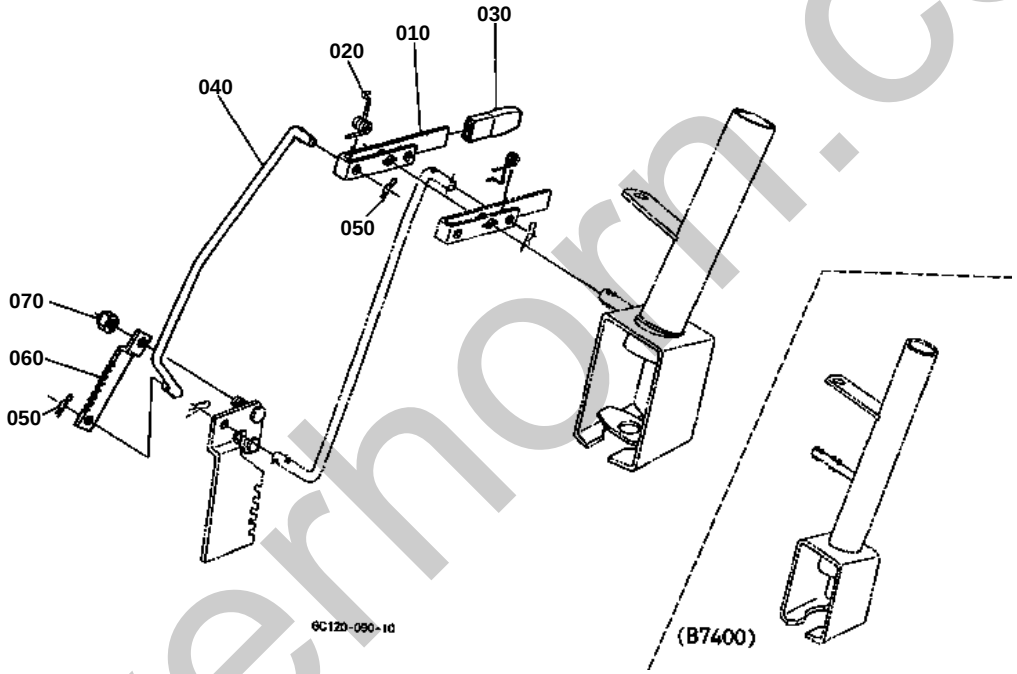

silverhorn.co.uk

PARKING BRAKE LEVER [HST TYPE] [EXCEPT[AU]]
[EXCEPTE[AU]]

↔ Interchangeable; ≠ not interchangeable; ← new for old; → old for new

REF.No	Part No.	Description	Q'ty	S.No.	I/C	REMARKS	Weight (kgf)	Weight (lb)
010	6C040-41350	LEVER	1				0.104	0.2288
020	6C040-41380	SPRING RETURN	1				0.008	0.0176
030	6C040-41360	GRIP LEVER	1				0.012	0.0264
040	6C040-41373	ROD BRAKE	1				0.22	0.484
050	05525-50800	PIN SNAP	2				0.001	0.0022
060	6C040-42250	PLATE BRAKE LOCK	1				0.07	0.154
070	50591-62370	NUT	1				0.005	0.011

silverhorn.co.uk

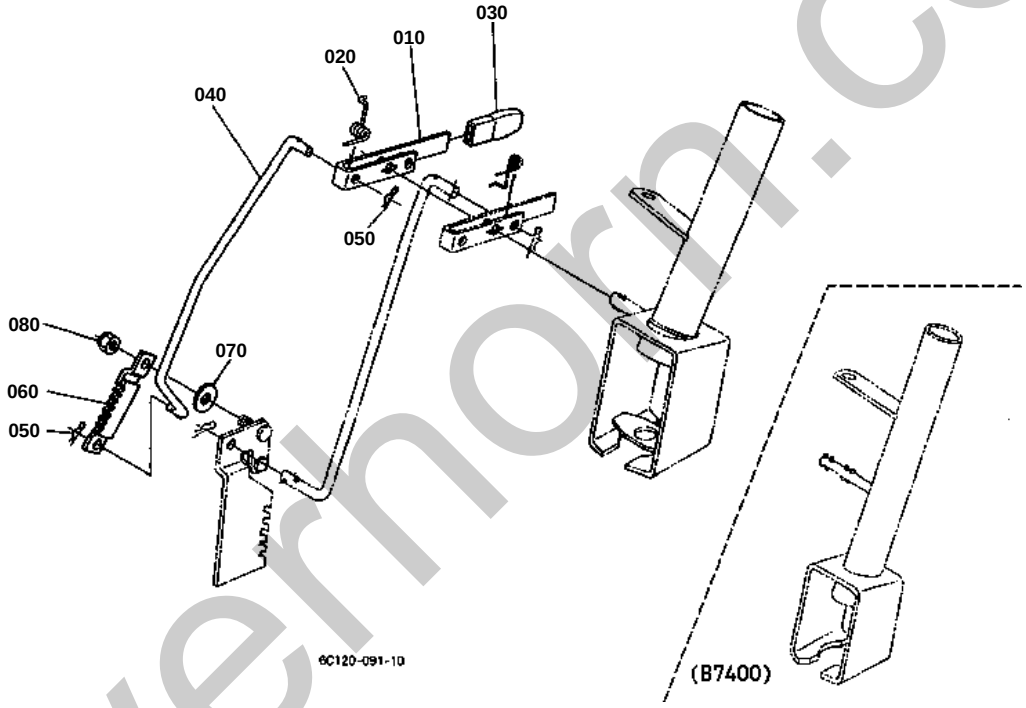

silverhorn.co.uk

PARKING BRAKE LEVER [HST TYPE] [AU]

↔ Interchangeable; ≠ not interchangeable; ← new for old; → old for new

REF.No	Part No.	Description	Q'ty	S.No.	I/C	REMARKS	Weight (kgf)	Weight (lb)
010	6C040-41350	LEVER	1				0.104	0.2288
020	6C040-41380	SPRING RETURN	1				0.008	0.0176
030	6C040-41360	GRIP LEVER	1				0.012	0.0264
040	6C040-41373	ROD BRAKE	1				0.22	0.484
050	05525-50800	PIN SNAP	2				0.001	0.0022
060	6C045-42250	PLATE BRAKE LOCK	1				0.108	0.2376
070	04015-60080	WASHER PLAIN	1				0.01	0.022
080	50591-62370	NUT	1				0.005	0.011

silverhorn.co.uk

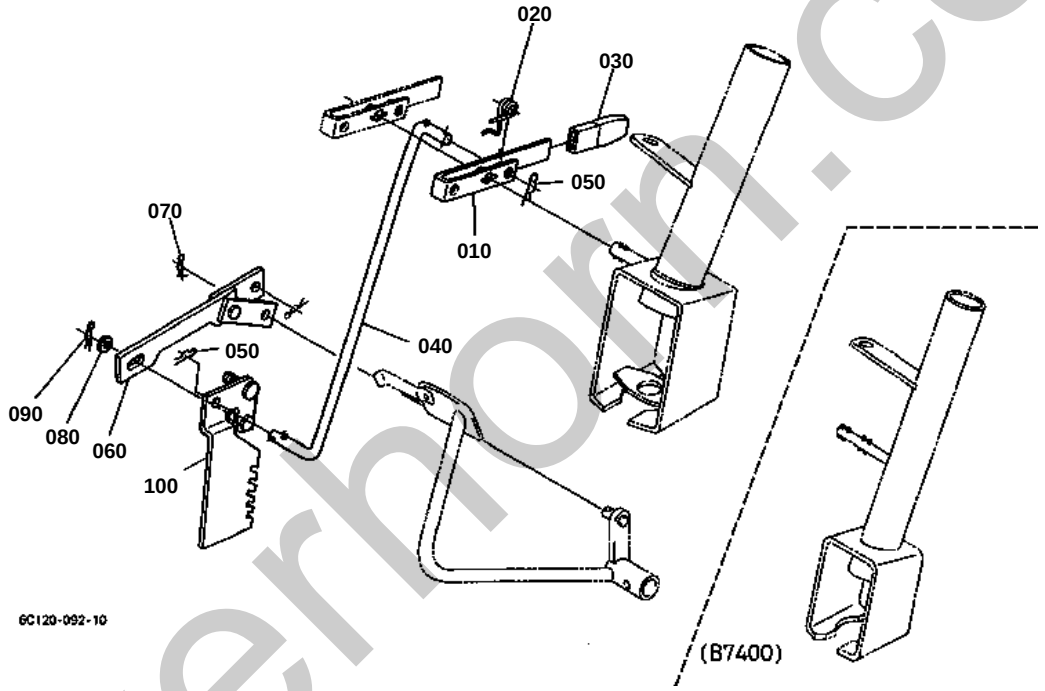

silverhorn.co.uk

SPEED SET LEVER [HST TYPE]

↔ Interchangeable; ≠ not interchangeable; ← new for old; → old for new

REF.No	Part No.	Description	Q'ty	S.No.	I/C	REMARKS	Weight (kgf)	Weight (lb)
010	6C040-41350	LEVER	1				0.104	0.2288
020	6C050-41390	SPRING RETURN	1				0.006	0.0132
030	6C040-41360	GRIP LEVER	1				0.012	0.0264
040	6C070-41382	ROD	1				0.18	0.396
050	05525-50800	PIN SNAP	2				0.001	0.0022
060	6C050-43340	ASSY LINK	1				0.142	0.3124
070	52300-34120	PIN SNAP	1				0.001	0.0022
080	04013-60080	WASHER PLAIN	1				0.002	0.0044
090	05525-50800	PIN SNAP	1				0.001	0.0022
100	6C050-43333	ARM	1				0.33	0.726

silverhorn.co.uk

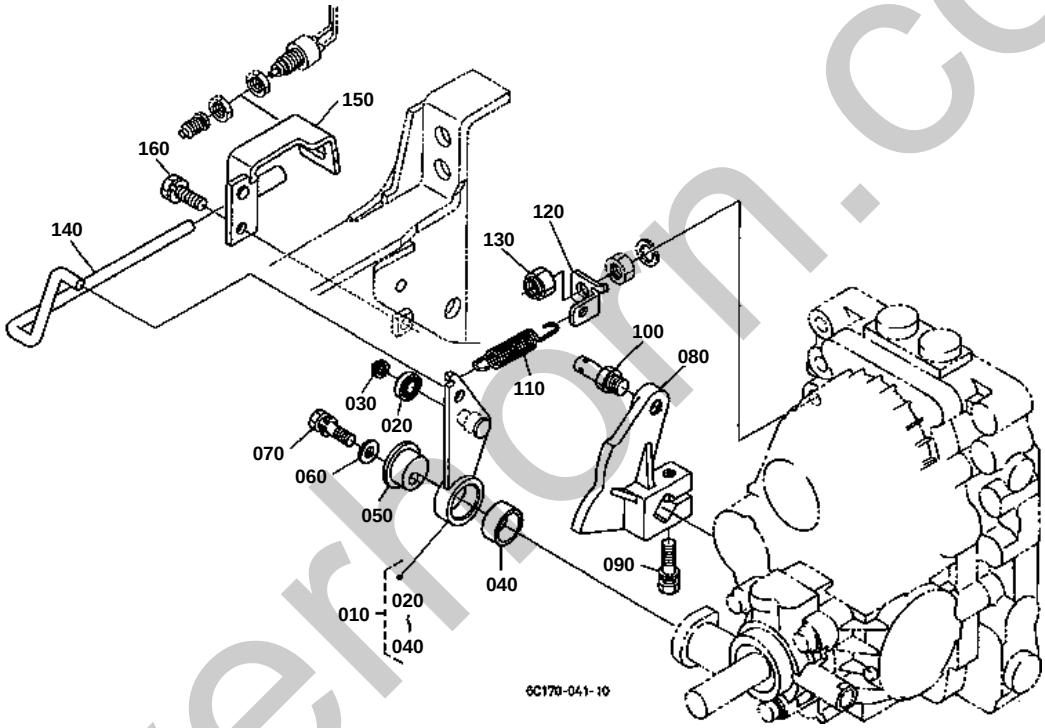

silverhorn.co.uk

NEUTRAL HOLDER LINK [HST TYPE]

↔ Interchangeable; ≠ not interchangeable; ← new for old; → old for new

REF.No	Part No.	Description	Q'ty	S.No.	I/C	REMARKS	Weight (kgf)	Weight (lb)
010	6C150-43410	ASSY ARM NEUTRAL	1	<=50589			0.16	0.352
010	6C150-43413	ASSY ARM NEUTRAL	1	>=50590	←		0	0
020	08141-06801	BEARING BALL	1	<=50589			0.006	0.0132
020	32721-43420	BEARING BALL	1	>=50590	←		0.007	0.0154
030	04612-00120	CIR CLIP EXTERNAL	1				0.001	0.0022
040	66204-43572	BUSH	1				0.003	0.0066
050	66204-43352	SHAFT HOLDER	1				0.072	0.1584
060	04012-50080	WASHER PLAIN	1				0.001	0.0022
070	01123-50835	BOLT	1				0.02	0.044
080	6C070-43310	HOLDER NEUTRAL	1				0.38	0.836
090	01123-50835	BOLT	1				0.02	0.044
100	32721-43510	STUD	1				0.027	0.0594
110	32721-43470	SPRING	1				0.044	0.0968
120	6C150-43480	HOOK SPRING	1				0	0
130	02574-50100	NUT LOCK	1				0.007	0.0154
140	6C150-43430	ROD HST NEUTRAL	1				0	0
150	6C150-43443	STAY NEUTRAL SWITCH	1				0.145	0.319
160	01123-50820	BOLT	1				0.011	0.0242

silverhorn.co.uk

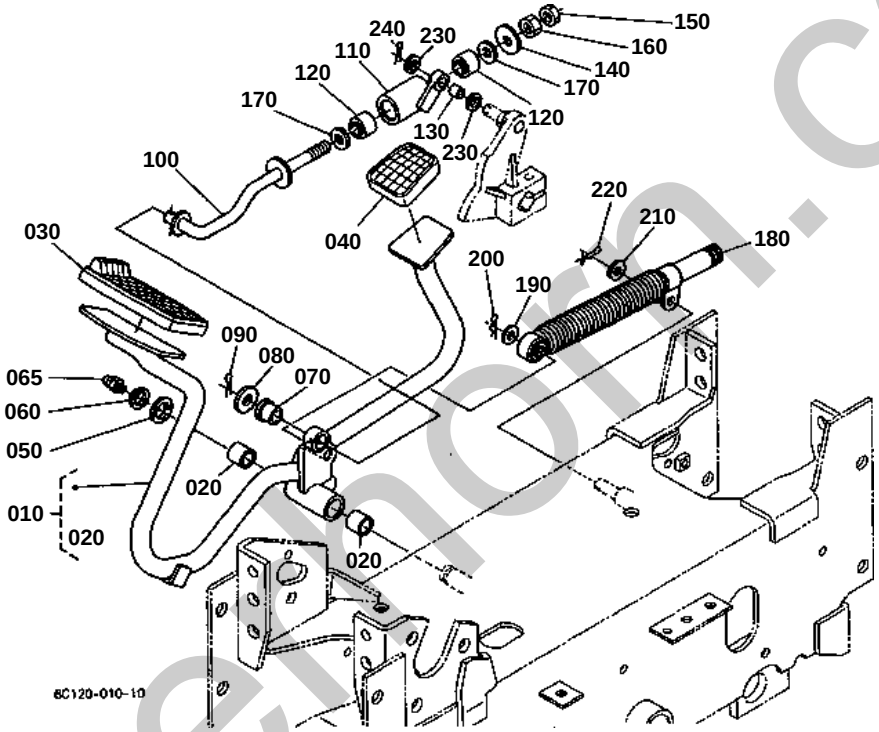

silvermorn.co.uk

SPEED CONTROL PEDAL [HST TYPE]

↔ Interchangeable; ≠ not interchangeable; ← new for old; → old for new

REF.No	Part No.	Description	Q'ty	S.No.	I/C	REMARKS	Weight (kgf)	Weight (lb)
010	6C070-43400	ASSY PEDAL HST	1				1.79	3.938
020	08511-01610	BUSH	2				0.005	0.011
030	37410-44120	COVER PEDAL	1				0.08	0.176
040	37410-42760	COVER PEDAL	1				0.025	0.055
050	45403-41330	COLLAR DISTANCE	1				0.01	0.022
060	04612-00160	CIR CLIP EXTERNAL	1				0.001	0.0022
065	06613-10675	NIPPLE GREASE	1				0.003	0.0066
070	32721-43540	BUSH	1				0.001	0.0022
080	04013-60100	WASHER PLAIN	1				0.004	0.0088
090	05511-52520	PIN SPLIT	1				0.001	0.0022
100	32721-43520	ROD	1				0.167	0.3674
110	32721-43530	ROD	1				0.2	0.44
120	6A110-18260	CUSHION RUBBER	2				0.012	0.0264
130	08511-01015	BUSH	1				0.009	0.0198
140	04015-50100	WASHER PLAIN	1				0.016	0.0352
150	02116-50100	NUT	1				0.004	0.0088
160	02118-50100	NUT	1				0.005	0.011
170	04011-50100	WASHER PLAIN	2				0.002	0.0044
180	6C052-43350	DAMPER HST	1				0.29	0.638
190	04012-50080	WASHER PLAIN	1				0.001	0.0022
200	05525-50800	PIN SNAP	1				0.001	0.0022
210	04012-50080	WASHER PLAIN	1				0.001	0.0022
220	52300-34120	PIN SNAP	1				0.001	0.0022
230	04011-50100	WASHER PLAIN	2				0.002	0.0044
240	05511-50320	PIN SPLIT	1				0.002	0.0044

silverhorn.co.uk

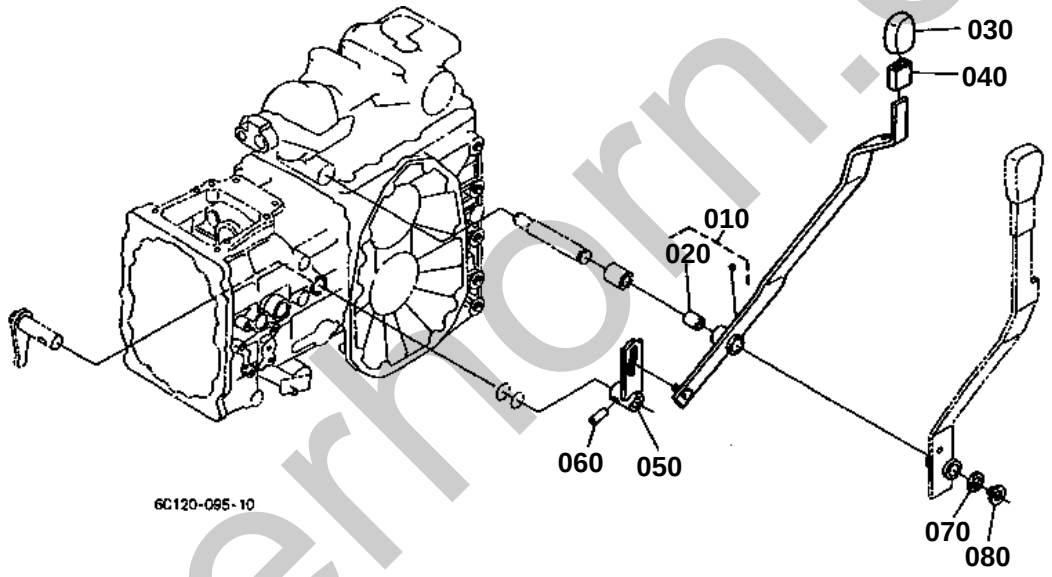

silverhorn.co.uk

RANGE GEAR SHIFT LEVER [HST TYPE]

↔ Interchangeable; ≠ not interchangeable; ← new for old; → old for new

REF.No	Part No.	Description	Q'ty	S.No.	I/C	REMARKS	Weight (kgf)	Weight (lb)
010	6C040-42600	LEVER RANGE SHIFT	1				0.83	1.826
020	08511-01825	BUSH	1				0.01	0.022
030	6A320-42630	GRIP LEVER	1				0.019	0.0418
040	37410-43570	PIPE	1				0.005	0.011
050	6C140-42620	LEVER SHIFT ARM	1				0.17	0.374
060	05411-00832	PIN SPRING	1				0.035	0.077
070	04011-50180	WASHER PLAIN	1				0.012	0.0264
080	04612-00180	CIR CLIP EXTERNAL	1				0.001	0.0022

silverhorn.co.uk

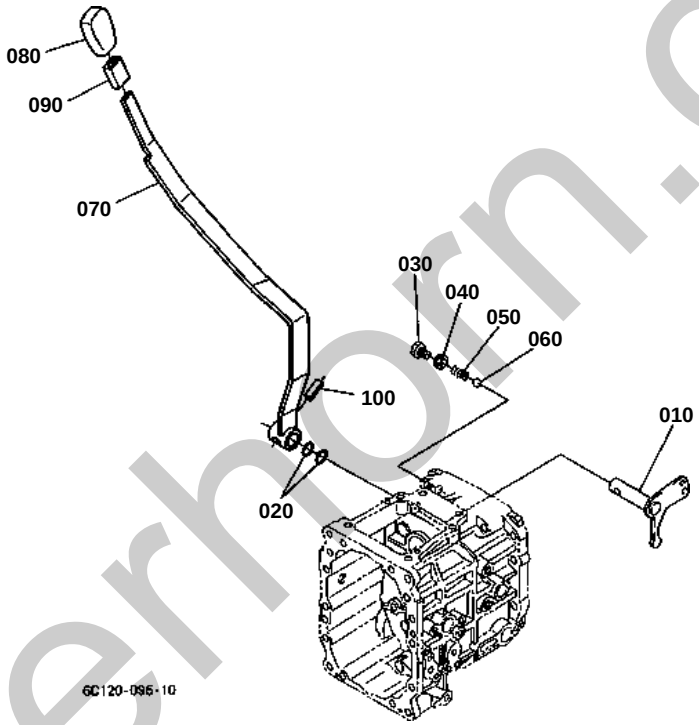

silverhorn.co.uk

FRONT WHEEL DRIVE LEVER

↔ Interchangeable; ≠ not interchangeable; ← new for old; → old for new

REF.No	Part No.	Description	Q'ty	S.No.	I/C	REMARKS	Weight (kgf)	Weight (lb)
010	6C040-19210	ARM 4WD SHIFT	1				0.19	0.418
020	04811-00160	O RING	2				0.001	0.0022
030	6C040-19222	BOLT	1				0.015	0.033
040	04717-01000	WASHER WITH RUBBER	1				0.001	0.0022
050	62061-18260	SPRING STOPPER	1				0.002	0.0044
060	07715-01605	BALL	1				0.003	0.0066
070	6C040-42910	LEVER 4WD CHANGE	1				0.66	1.452
080	6A320-42630	GRIP LEVER	1				0.019	0.0418
090	37410-43570	PIPE	1				0.005	0.011
100	05411-00832	PIN SPRING	1				0.035	0.077

silverhorn.co.uk

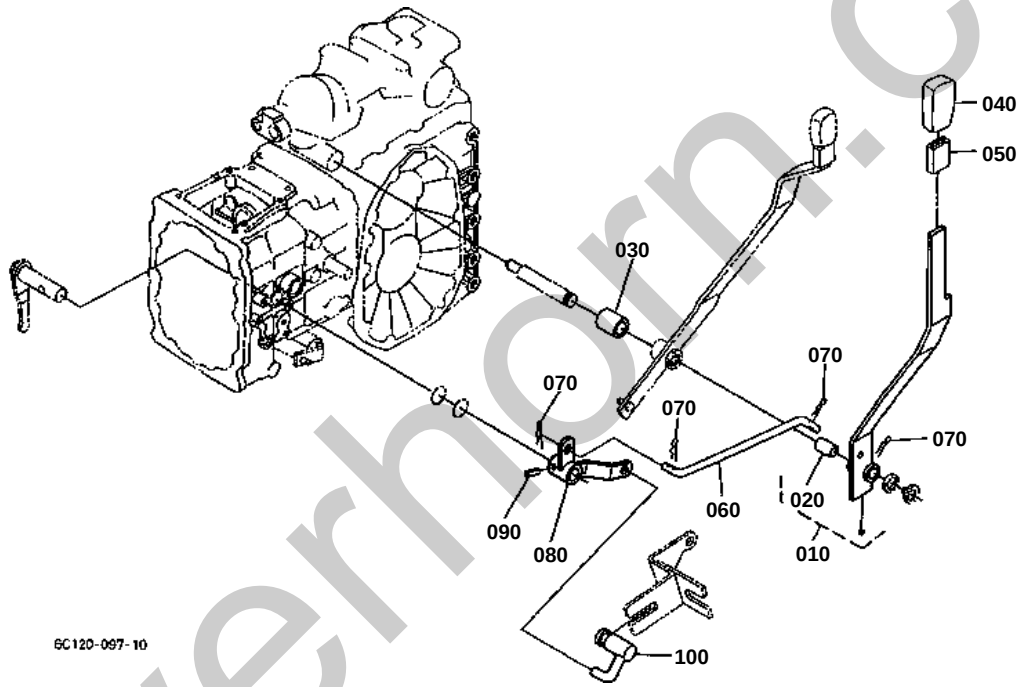

silverhorn.co.uk

PTO GEAR SHIFT LEVER

↔ Interchangeable; ≠ not interchangeable; ← new for old; → old for new

REF.No	Part No.	Description	Q'ty	S.No.	I/C	REMARKS	Weight (kgf)	Weight (lb)
010	6C120-42702	LEVER PTO SHIFT	1				0.72	1.584
020	08511-01825	BUSH	1				0.01	0.022
030	6C120-42750	COLLAR	1				0.055	0.121
040	6A320-42780	GRIP LEVER	1				0.034	0.0748
050	6A100-18560	CUSHION	1				0.005	0.011
060	6C040-42743	ROD PTO	1				0.15	0.33
070	05525-61000	PIN SNAP	4				0.002	0.0044
080	6C090-42720	LEVER SHIFT ARM	1				0.22	0.484
090	05411-00832	PIN SPRING	1				0.035	0.077
100	6C050-42642	ROD NEUTRAL SWITCH	1				0.113	0.2486

silverhorn.co.uk

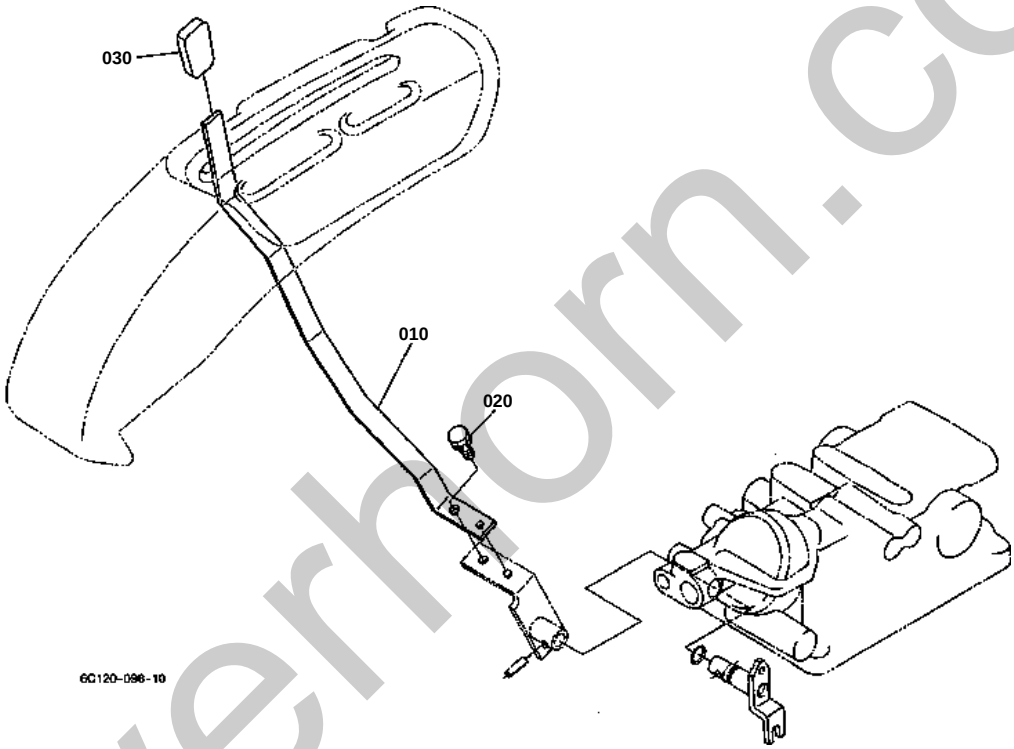

silverhorn.co.uk

HYDRAULIC CONTROL LEVER

↔ Interchangeable; ≠ not interchangeable; ← new for old; → old for new

REF.No	Part No.	Description	Q'ty	S.No.	I/C	REMARKS	Weight (kgf)	Weight (lb)
010	6C120-36280	LEVER HYD.CONTROL	1				0.32	0.704
020	01123-50820	BOLT	1				0.011	0.0242
030	31351-36880	GRIP LEVER	1				0.04	0.088

silverhorn.co.uk

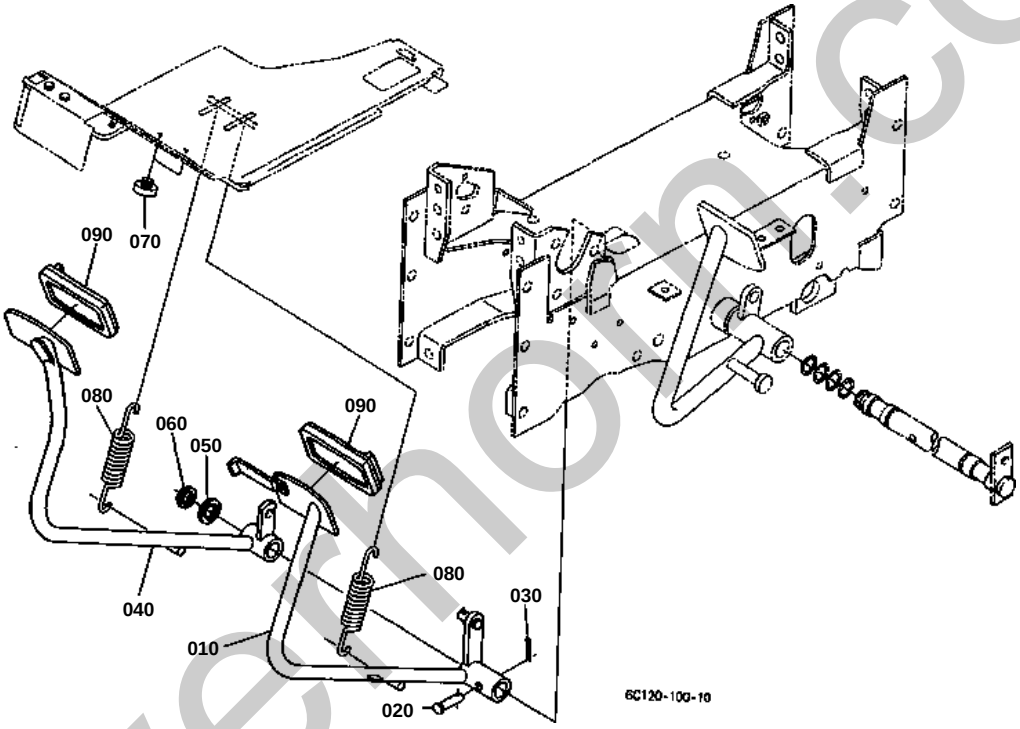

silvermoon.co.uk

BRAKE PEDAL

↔ Interchangeable; ≠ not interchangeable; ← new for old; → old for new

REF.No	Part No.	Description	Q'ty	S.No.	I/C	REMARKS	Weight (kgf)	Weight (lb)
010	6C040-42325	PEDAL BRAKE LH	1				1.75	3.85
020	05122-50840	PIN JOINT	1				0.017	0.0374
030	05511-50218	PIN SPLIT	1				0.001	0.0022
040	6C040-42330	PEDAL BRAKE RH	1				1.77	3.894
050	66591-43233	COLLAR	1				0.004	0.0088
060	04612-00240	CIR CLIP EXTERNAL	1				0.002	0.0044
070	6C040-42342	CUSHION	2				0.005	0.011
080	66621-43270	SPRING BRAKE RETURN	2				0.04	0.088
090	37410-44120	COVER PEDAL	2				0.08	0.176

silverhorn.co.uk

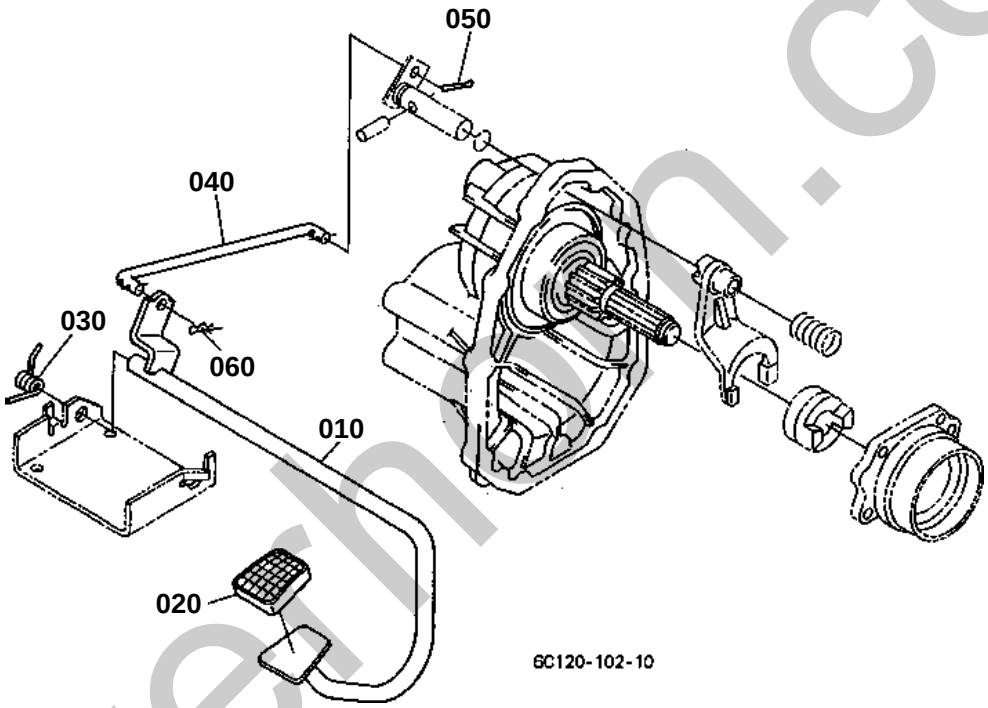

silverhorn.co.uk

DIFFERENTIAL LOCK PEDAL [HST TYPE]

↔ Interchangeable; ≠ not interchangeable; ← new for old; → old for new

REF.No	Part No.	Description	Q'ty	S.No.	I/C	REMARKS	Weight (kgf)	Weight (lb)
010	6C050-42872	PEDAL DIFF.LOCK	1				1.2	2.64
020	37410-42760	COVER PEDAL	1				0.025	0.055
030	6C050-42890	SPRING	1				0.04	0.088
040	6C040-42880	ROD DIFF.LOCK	1				0.1	0.22
050	05511-50215	PIN SPLIT	1				0.001	0.0022
060	05525-50800	PIN SNAP	1				0.001	0.0022

silverhorn.co.uk

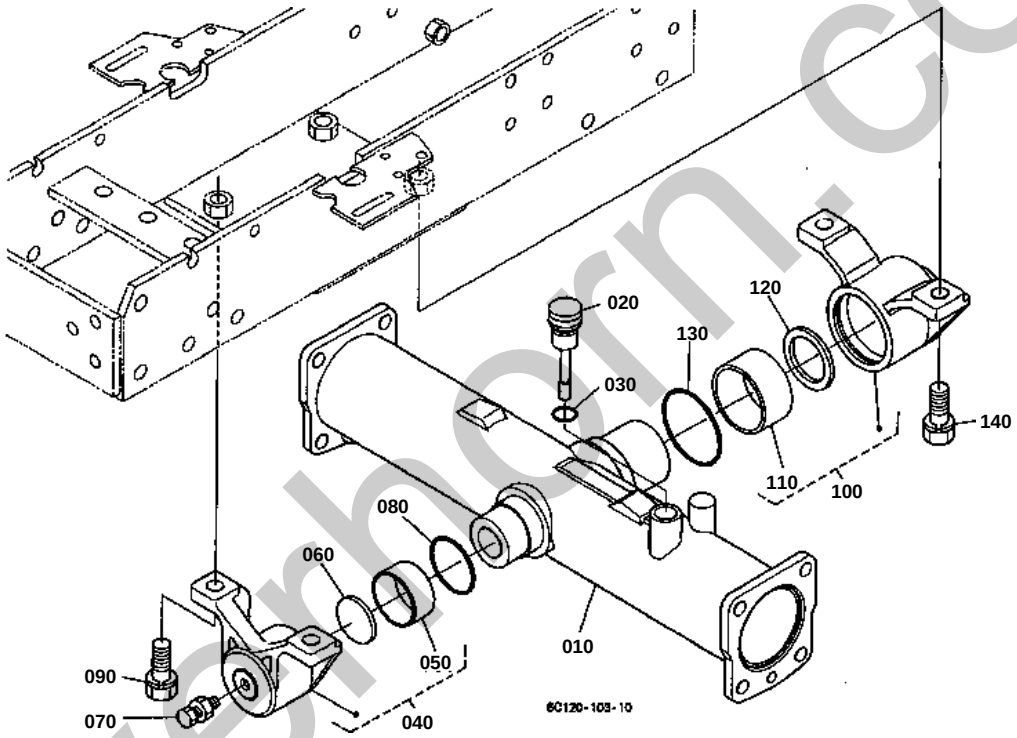

silverhorn.co.uk

FRONT AXLE CASE

↔ Interchangeable; ≠ not interchangeable; ← new for old; → old for new

REF.No	Part No.	Description	Q'ty	S.No.	I/C	REMARKS	Weight (kgf)	Weight (lb)
010	6C140-56110	CASE FRONT AXLE	1				7.6	16.72
020	6C040-56123	GAUGE OIL	1				0.024	0.0528
030	04811-00180	O RING	1				0.001	0.0022
040	6C140-56170	ASSY HOLDER	1				1.28	2.816
050	08511-05020	BUSH	1				0.06	0.132
060	37410-56180	COLLAR THRUST	1				0.07	0.154
070	6C040-56170	COMP.BOLT FRONT AXLE	1				0.04	0.088
080	04811-50550	O RING	1				0.002	0.0044
090	01133-51440	BOLT	2				0.34	0.748
100	6C140-56180	ASSY HOLDER	1				1.72	3.784
110	08511-06530	BUSH	1				0	0
120	6C040-56150	COLLAR THRUST	1				0.02	0.044
130	04811-50700	O RING	1				0.002	0.0044
140	01133-51440	BOLT	2				0.34	0.748

silverhorn.co.uk

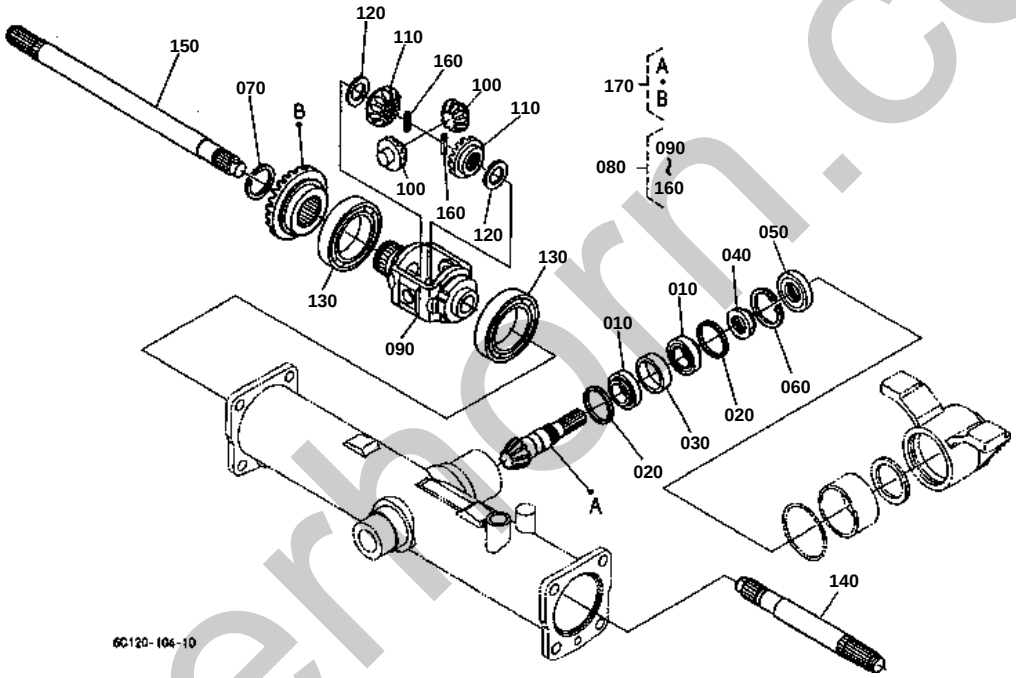

silverhorn.co.uk

↔ Interchangeable; ≠ not interchangeable; ← new for old; → old for new

REF.No	Part No.	Description	Q'ty	S.No.	I/C	REMARKS	Weight (kgf)	Weight (lb)
010	08711-30205	BEARING TAPER-ROLLER	2				0.148	0.3256
020	37410-58160	COLLAR	2			3.40MM	0.01	0.022
020	37410-58170	COLLAR	2			3.60MM	0.01	0.022
020	37410-58150	COLLAR	2			3.80MM	0.01	0.022
020	6C040-56630	COLLAR	2			3.90MM	0.009	0.0198
020	37410-58120	COLLAR	2			4.00MM	0.01	0.022
020	37410-58130	COLLAR	2			4.10MM	0.01	0.022
020	37410-58140	COLLAR	2			4.20MM	0.01	0.022
020	37410-56680	COLLAR	2			4.40MM	0.015	0.033
020	6C040-56620	COLLAR	2			4.50MM	0.01	0.022
020	37410-56660	COLLAR	2			4.60MM	0.011	0.0242
030	37410-56690	COLLAR	1				0.04	0.088
040	37410-56710	NUT	1				0.03	0.066
050	09500-20408	SEAL OIL	1				0.012	0.0264
060	04611-00520	CIR CLIP INTERNAL	1				0.009	0.0198
070	6C040-56820	CIR CLIP EXTERNAL	1				0.003	0.0066
080	6A320-56902	ASSY DIFF. FRONT	1				2.91	6.402
090	6A320-56830	CASE DIFF.FRONT	1				0.71	1.562
100	6A320-56860	PINION BEVEL GEAR	2			10T	0.07	0.154
110	6A320-56910	GEAR BEVEL	2			14T	0.11	0.242
120	61361-14330	COLLAR	2				0.001	0.0022
130	08101-06010	BEARING BALL	2				0.262	0.5764
140	6A320-57112	SHAFT YOKE LH	1				0.44	0.968
150	6A320-57122	SHAFT YOKE RH	1				0.82	1.804
160	05411-00520	PIN SPRING	2				0.002	0.0044
170	6C120-97960	ASSY GEAR BEVEL	1			10-23T	0	0

silverhorn.co.uk

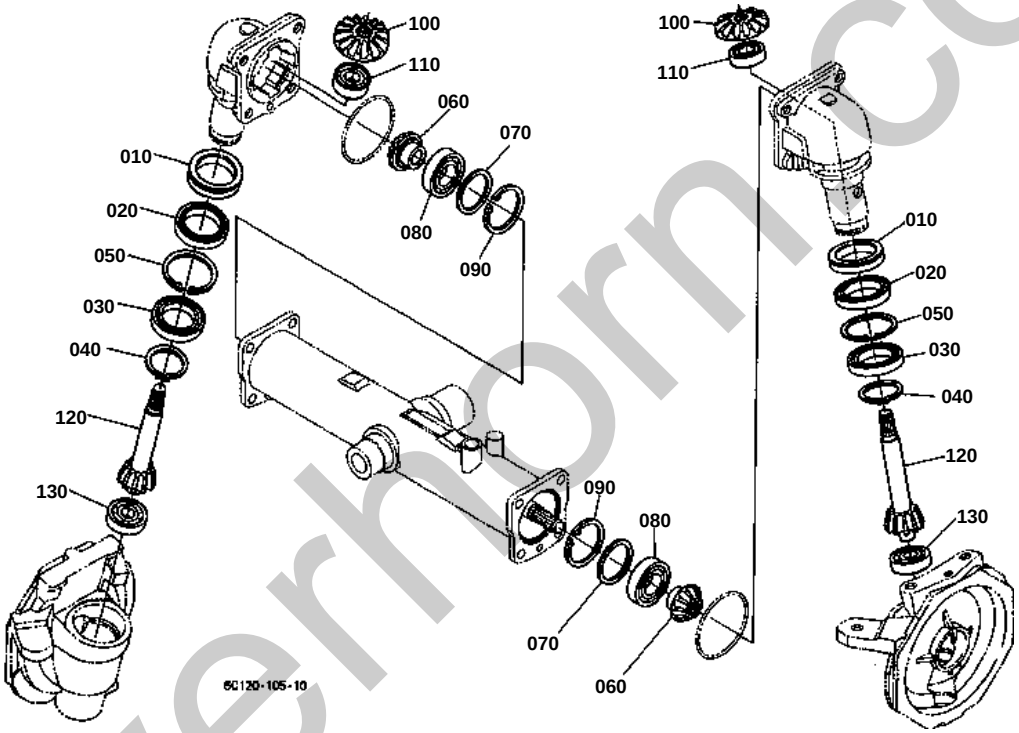

silverhorn.co.uk

DIFFERENTIAL GEAR SHAFT

↔ Interchangeable; ≠ not interchangeable; ← new for old; → old for new

REF.No	Part No.	Description	Q'ty	S.No.	I/C	REMARKS	Weight (kgf)	Weight (lb)
010	6A320-56220	SEAL OIL	2				0.06	0.132
020	08101-06910	BEARING BALL	2				0.14	0.308
030	08101-06909	BEARING BALL	2				0.135	0.297
040	04612-00450	CIR CLIP EXTERNAL	2				0.007	0.0154
050	04611-00680	CIR CLIP INTERNAL	2				0.016	0.0352
060	6A320-57132	GEAR BEVEL F	2			10T	0.16	0.352
070	6C040-57140	SHIM	2			0.80MM	0.006	0.0132
070	6C040-57130	SHIM	2			1.00MM	0.008	0.0176
070	6C040-57150	SHIM	2			1.20MM	0.009	0.0198
070	6C040-57160	SHIM	2			1.40MM	0.011	0.0242
080	08101-06206	BEARING BALL	2				0.196	0.4312
090	04611-00620	CIR CLIP INTERNAL	2				0.011	0.0242
100	6A320-57180	GEAR BEVEL F	2			16T	0.28	0.616
110	08101-06204	BEARING BALL	2				0.102	0.2244
120	6A320-57210	SHAFT BEVEL GEAR	2			9T	0.65	1.43
130	08101-06304	BEARING BALL	2				0.146	0.3212

silverhorn.co.uk

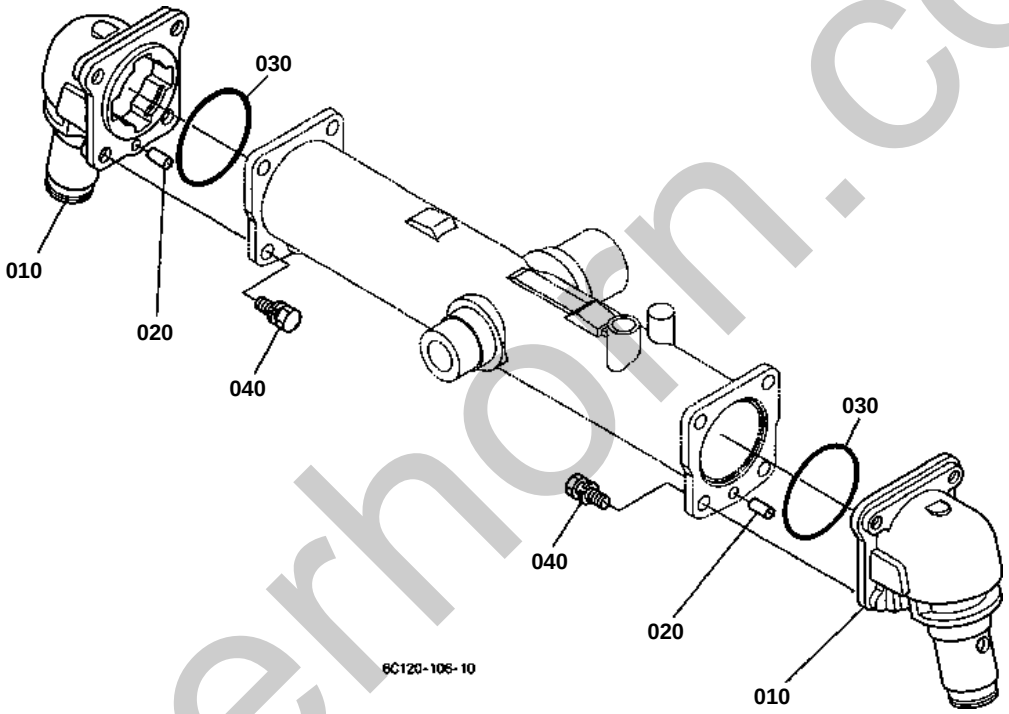

silverhorn.co.uk

BEVEL GEAR CASE

↔ Interchangeable; ≠ not interchangeable; ← new for old; → old for new

REF.No	Part No.	Description	Q'ty	S.No.	I/C	REMARKS	Weight (kgf)	Weight (lb)
010	6A320-56213	CASE BEVEL GEAR	2				2.45	5.39
020	05012-01020	PIN STRAIGHT	2				0.02	0.044
030	04811-50850	O RING	2				0.003	0.0066
040	01133-51230	BOLT	8				0.04	0.088

silverhorn.co.uk

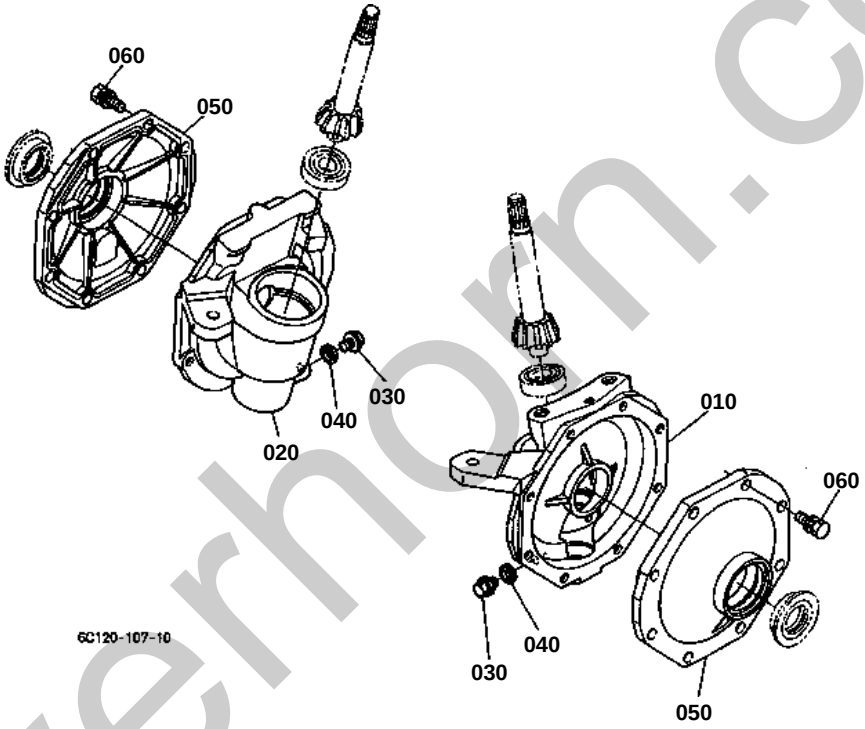

silverhorn.co.uk

FRONT AXLE CASE

↔ Interchangeable; ≠ not interchangeable; ← new for old; → old for new

REF.No	Part No.	Description	Q'ty	S.No.	I/C	REMARKS	Weight (kgf)	Weight (lb)
010	6C120-56310	CASE GEAR LH	1				4.54	9.988
020	6C120-56320	CASE GEAR RH	1				4.45	9.79
030	01774-51010	BOLT FLANGE	2				0.08	0.176
040	04717-01000	WASHER WITH RUBBER	2				0.001	0.0022
050	6A320-56340	COVER GEAR CASE	2				0.7	1.54
060	01133-51028	BOLT	16				0.027	0.0594

silverhorn.co.uk

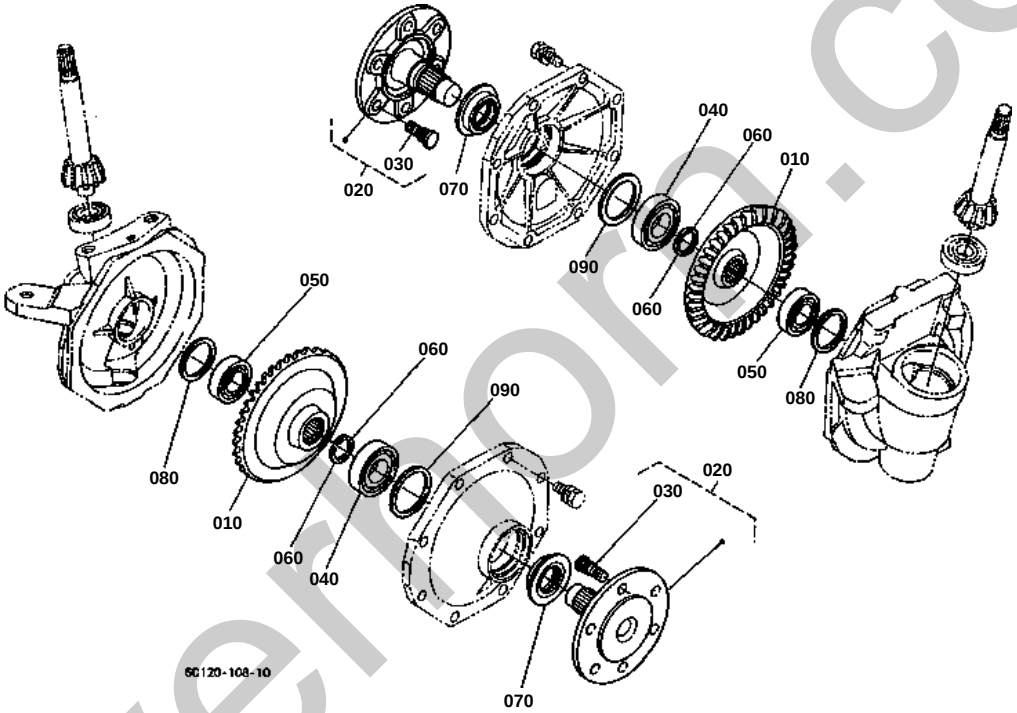

silverhorn.co.uk

↔ Interchangeable; ≠ not interchangeable; ← new for old; → old for new

REF.No	Part No.	Description	Q'ty	S.No.	I/C	REMARKS	Weight (kgf)	Weight (lb)
010	6A320-57310	GEAR BEVEL	2			38T	2.05	4.51
020	6A100-57302	ASSY SHAFT F.AXLE	2				0	0
030	6C040-57330	BOLT	12				0.035	0.077
040	08101-06206	BEARING BALL	2				0.196	0.4312
050	08101-06205	BEARING BALL	2				0.14	0.308
060	67156-56820	COLLAR SET	4				0.004	0.0088
070	T0430-57340	SEAL OIL	2				0.055	0.121
080	31353-43160	SHIM	2			0.80MM	0.01	0.022
080	66706-14350	SHIM SHAFT	2			1.00MM	0.004	0.0088
080	31353-43180	SHIM	2			1.20MM	0.003	0.0066
090	6C040-57140	SHIM	2			0.80MM	0.006	0.0132
090	6C040-57130	SHIM	2			1.00MM	0.008	0.0176
090	6C040-57150	SHIM	2			1.20MM	0.009	0.0198
090	6C040-57160	SHIM	2			1.40MM	0.011	0.0242

silverhorn.co.uk

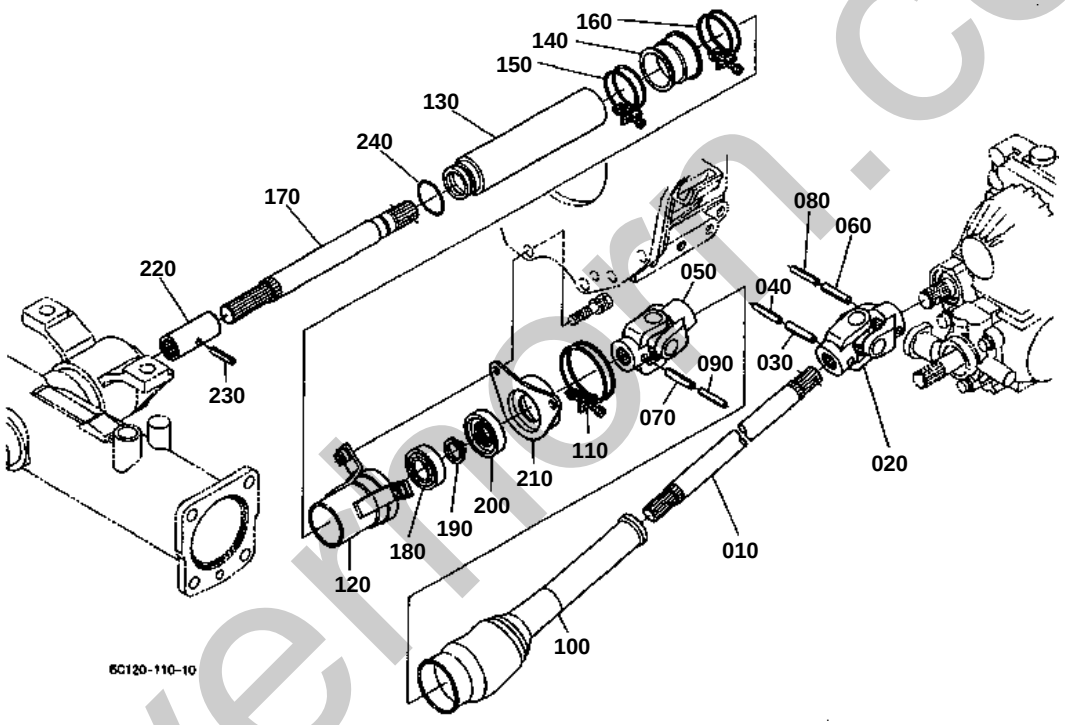

silvermorn.co.uk

FRONT DRIVE SHAFT [HST TYPE]

↔ Interchangeable; ≠ not interchangeable; ← new for old; → old for new

REF.No	Part No.	Description	Q'ty	S.No.	I/C	REMARKS	Weight (kgf)	Weight (lb)
010	6C050-57512	SHAFT DRIVE REAR	1				1.17	2.574
020	6C040-57500	ASSY JOINT UNIVERSAL	1				0.68	1.496
030	05411-00640	PIN SPRING	1				0.006	0.0132
040	32721-57680	PIN SPRING	1				0.002	0.0044
050	6C040-57542	ASSY JOINT UNIVERSAL	1				0.69	1.518
060	05411-00640	PIN SPRING	1				0.006	0.0132
070	05411-00640	PIN SPRING	1				0.006	0.0132
080	32721-57680	PIN SPRING	1				0.002	0.0044
090	32721-57680	PIN SPRING	1				0.002	0.0044
100	6C040-57550	COVER	1				0.045	0.099
110	09318-89069	CLAMP HOSE	1				0.04	0.088
120	6C040-57610	COVER FRONT SHAFT	1				0.25	0.55
130	6C040-57662	COVER FRONT SHAFT	1				0.25	0.55
140	6C040-57650	COVER FRONT SHAFT	1				0.035	0.077
150	09318-89052	CLAMP HOSE	1				0.03	0.066
160	09318-89058	CLAMP HOSE	1				0.028	0.0616
170	6C040-57622	SHAFT FRONT DRIVE	1				0.73	1.606
180	08141-06204	BEARING BALL	1				0.101	0.2222
190	04612-00200	CIR CLIP EXTERNAL	1				0.001	0.0022
200	6C040-57630	SEAL OIL	1				0.025	0.055
210	6C040-57640	SUPPORT	1				0.14	0.308
220	T0070-14710	COUPLING	1				0.16	0.352
230	05411-00430	PIN SPRING	1				0.002	0.0044
240	04811-06370	O RING	1				0.001	0.0022

silverhorn.co.uk

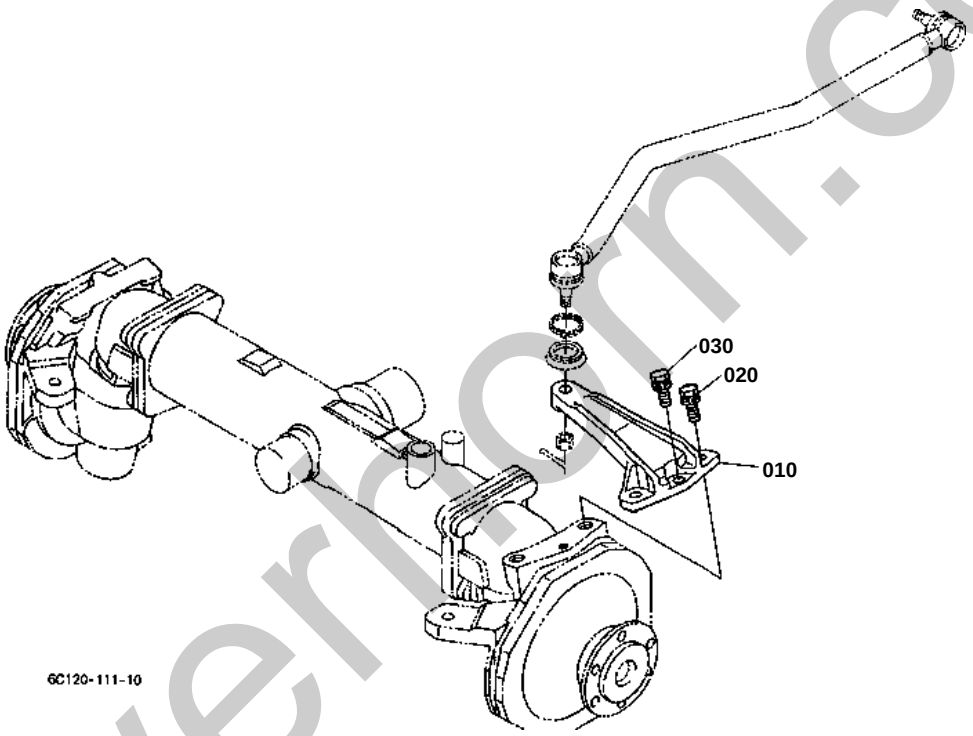

silverthorn.co.uk

KNUCKLE ARM

↔ Interchangeable; ≠ not interchangeable; ← new for old; → old for new

REF.No	Part No.	Description	Q'ty	S.No.	I/C	REMARKS	Weight (kgf)	Weight (lb)
010	6C120-56410	ARM KNUCKLE	1				1.48	3.256
020	01138-61235	BOLT	2				0.02	0.044
030	01133-51025	BOLT	1				0.023	0.0506

silverhorn.co.uk

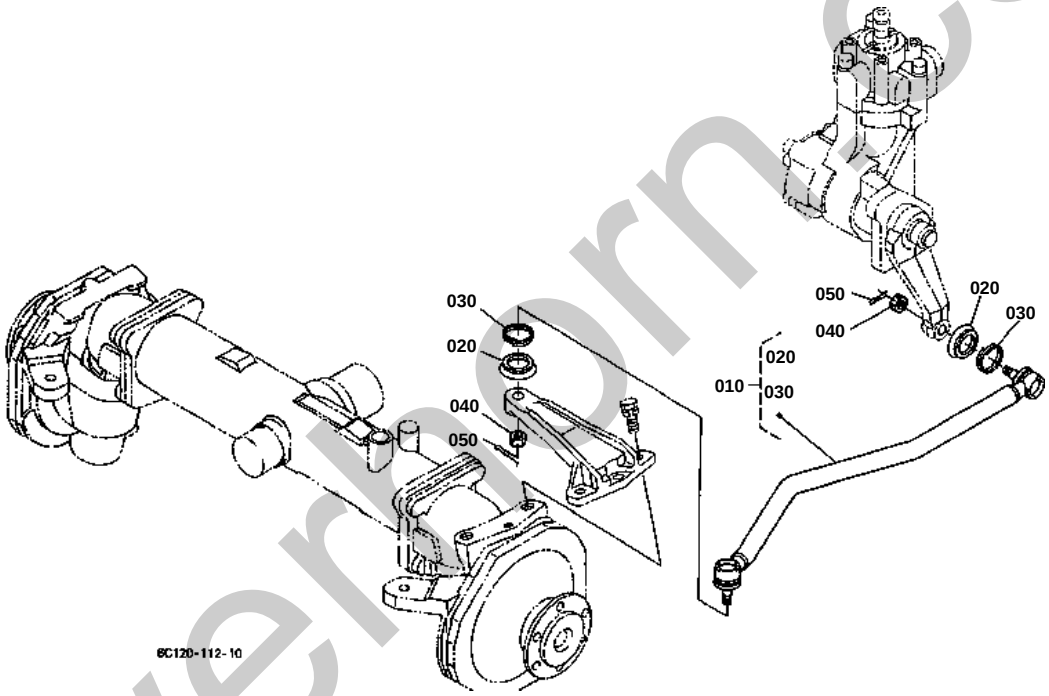

silverthorn.co.uk

DRAG LINK

↔ Interchangeable; ≠ not interchangeable; ← new for old; → old for new

REF.No	Part No.	Description	Q'ty	S.No.	I/C	REMARKS	Weight (kgf)	Weight (lb)
010	6C140-57712	ASSY LINK DRAG	1				0	0
020	67121-56560	COVER DUST	2				0.008	0.0176
030	67121-56570	CLIP	2				0.003	0.0066
040	66591-56780	NUT	2				0.01	0.022
050	05511-52528	PIN SPLIT	2				0.001	0.0022

silverhorn.co.uk

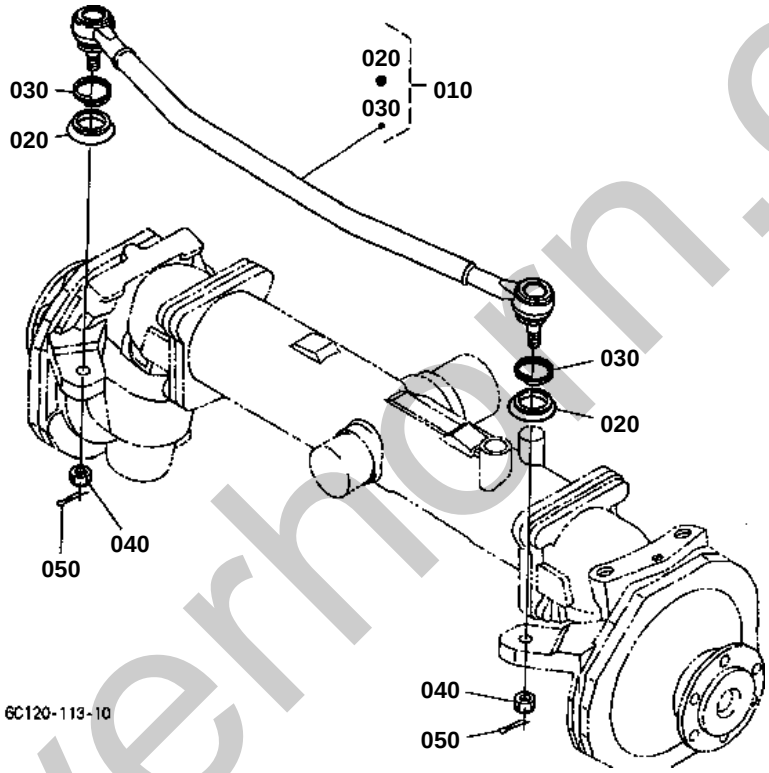

silverhorn.co.uk

TIE ROD

↔ Interchangeable; ≠ not interchangeable; ← new for old; → old for new

REF.No	Part No.	Description	Q'ty	S.No.	I/C	REMARKS	Weight (kgf)	Weight (lb)
010	6A320-56422	ASSY ROD TIE	1				1.6	3.52
020	67121-56560	COVER DUST	2				0.008	0.0176
030	67121-56570	CLIP	2				0.003	0.0066
040	66591-56780	NUT	2				0.01	0.022
050	05511-52522	PIN SPLIT	2				0	0

silverhorn.co.uk

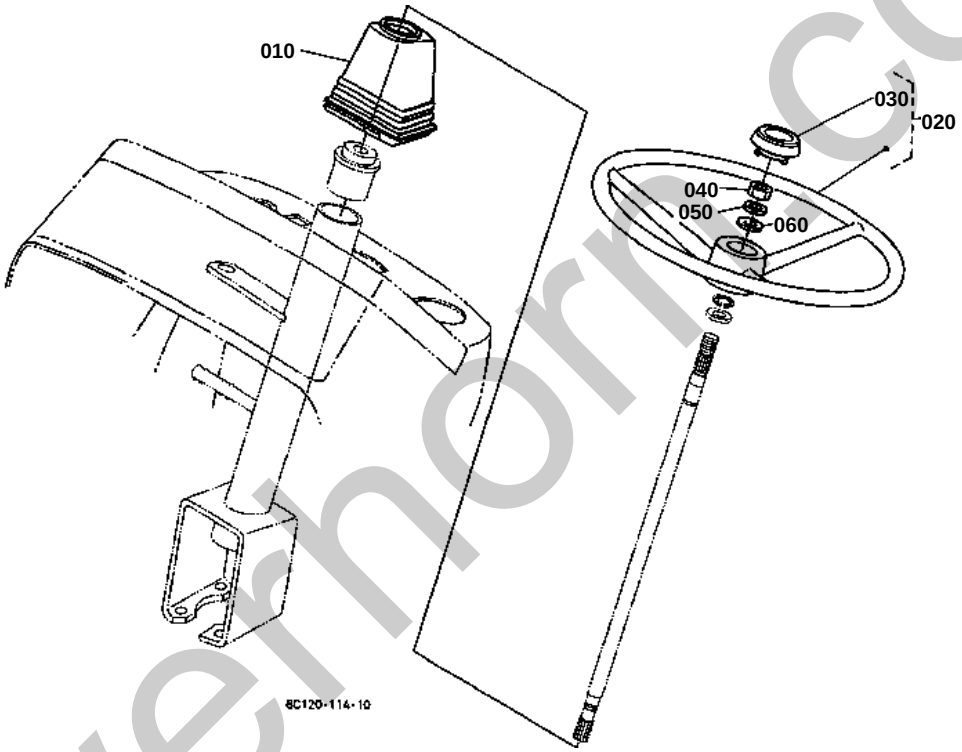

silverhorn.co.uk

STEERING HANDLE

↔ Interchangeable; ≠ not interchangeable; ← new for old; → old for new

REF.No	Part No.	Description	Q'ty	S.No.	I/C	REMARKS	Weight (kgf)	Weight (lb)
010	6C040-53553	BOOT STEERING	1				0.075	0.165
020	32400-16800	ASSY WHEEL STEERING	1				1.96	4.312
030	32400-16820	PAD STEERING	1				0.05	0.11
040	02172-50120	NUT	1				0.01	0.022
050	04512-60120	WASHER SPRING	1				0.005	0.011
060	04013-60120	WASHER PLAIN	1				0.01	0.022

silverhorn.co.uk

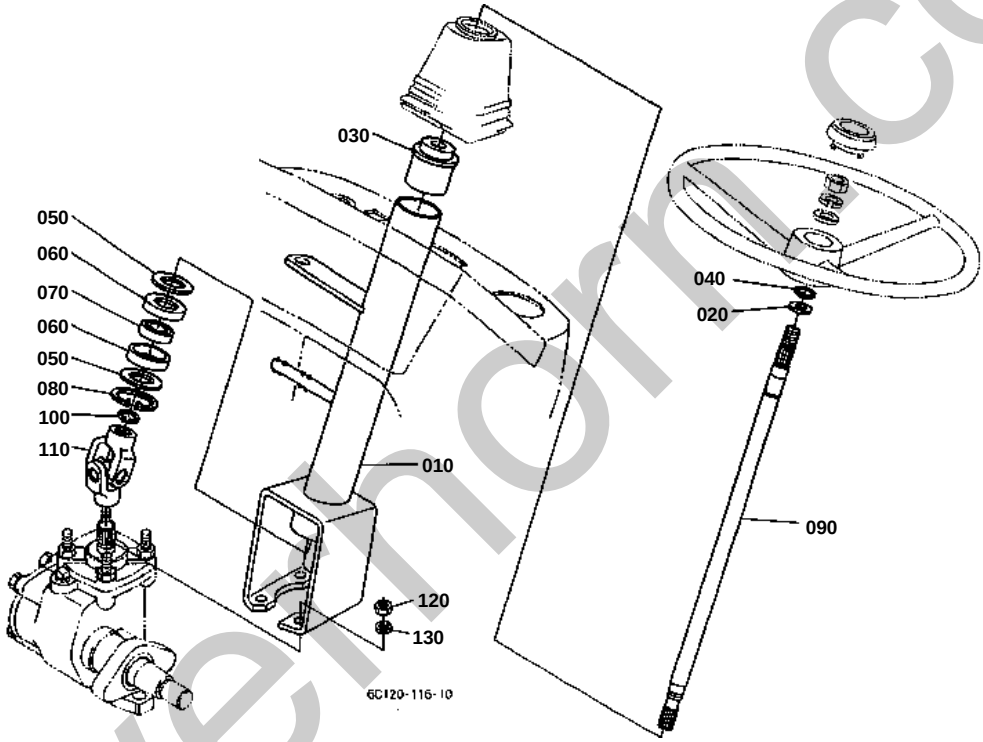

silverthorn.co.uk

UNIVERSAL JOINT

↔ Interchangeable; ≠ not interchangeable; ← new for old; → old for new

REF.No	Part No.	Description	Q'ty	S.No.	I/C	REMARKS	Weight (kgf)	Weight (lb)
010	6C090-41325	POST STEERING	1				0	0
020	04013-60160	WASHER PLAIN	1				0.01	0.022
030	6C040-41510	BUSH	1				0.035	0.077
040	04612-00160	CIR CLIP EXTERNAL	1				0.001	0.0022
050	6C040-41390	COLLAR	2				0.007	0.0154
060	6C040-41523	COVER BEARING	2				0.007	0.0154
070	08121-06002	BEARING BALL	1				0.03	0.066
080	04611-00420	CIR CLIP INTERNAL	1				0.006	0.0132
090	6C090-41343	SHAFT STEERING	1				0.66	1.452
100	04612-00150	CIR CLIP EXTERNAL	1				0.001	0.0022
110	6C040-41330	JOINT UNIVERSAL	1				0.29	0.638
120	02156-50080	NUT	4				0.004	0.0088
130	04512-60080	WASHER SPRING	4				0.002	0.0044

silverhorn.co.uk

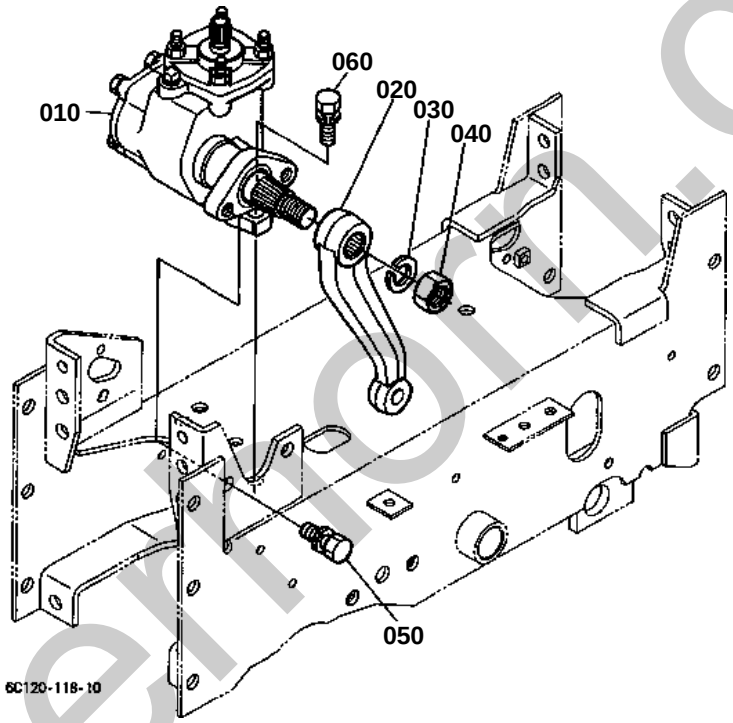

silverthorn.co.uk

↔ Interchangeable; ≠ not interchangeable; ← new for old; → old for new

REF.No	Part No.	Description	Q'ty	S.No.	I/C	REMARKS	Weight (kgf)	Weight (lb)
010	6C110-41100	ASSY STEERING	1			REFER TO L.No.I05-L FOR COMPONENTS.	5.2	11.44
020	6C110-41210	ARM PITMAN	1				0	0
030	04512-60200	WASHER SPRING	1				0.02	0.044
040	02172-50200	NUT	1				0.03	0.066
050	01133-51230	BOLT	2				0.04	0.088
060	01133-51235	BOLT	2				0.05	0.11

silverhorn.co.uk

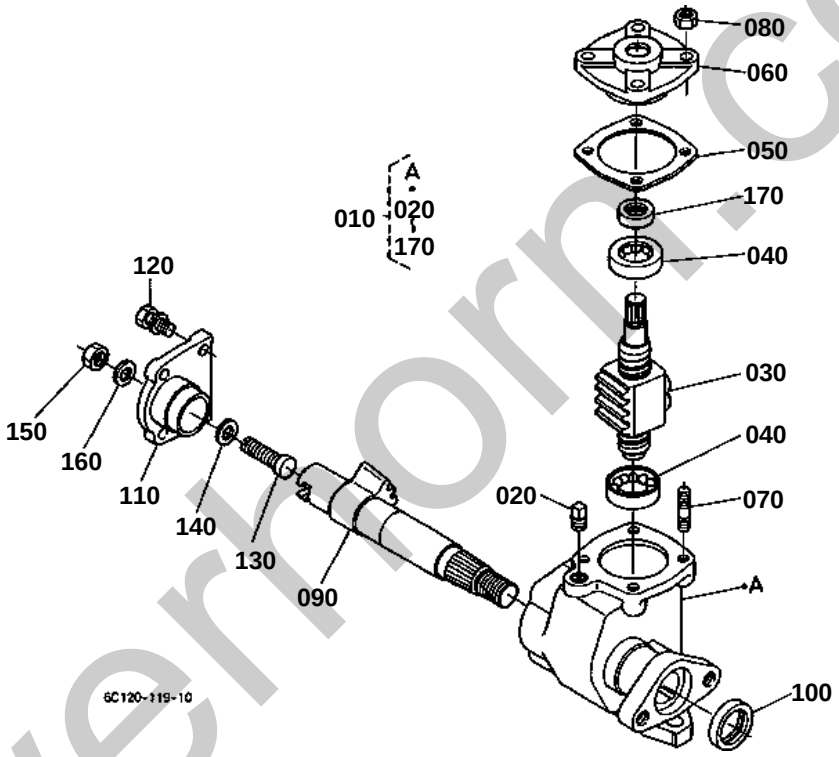

silverthorn.co.uk

↔ Interchangeable; ≠ not interchangeable; ← new for old; → old for new

REF.No	Part No.	Description	Q'ty	S.No.	I/C	REMARKS	Weight (kgf)	Weight (lb)
010	6C110-41100	ASSY STEERING	1				5.2	11.44
020	34150-16640	PLUG	1				0.015	0.033
030	6C090-41200	COMP.NUT BALL	1				0.6	1.32
040	38260-16210	BEARING BALL	2				0.06	0.132
050	6C090-41260	SHIM	1			0.05MM	0.001	0.0022
050	6C090-41270	SHIM	1			0.08MM	0.001	0.0022
050	6C090-41280	SHIM	1			0.10MM	0.001	0.0022
050	6C090-41290	SHIM	1			0.20MM	0.001	0.0022
060	6C090-41130	COVER STEERING	1				0.31	0.682
070	6C090-41120	STUD	4				0.013	0.0286
080	02156-50080	NUT	4				0.004	0.0088
090	6C090-41250	SHAFT SECTOR	1				0.9	1.98
100	09500-26387	SEAL OIL	1				0.008	0.0176
110	6C090-41160	COVER STEERING	1				0.43	0.946
120	01123-50822	BOLT	4				0.012	0.0264
130	6C090-41310	BOLT SECTOR SHAFT	1				0.03	0.066
140	34150-16440	COLLAR ADJUSTING	1			1.5+0.015MM TO +0.035MM	0.002	0.0044
140	34150-16450	COLLAR ADJUSTING	1			1.5+0.045MM TO +0.065MM	0.002	0.0044
140	34150-16460	COLLAR ADJUSTING	1			1.5+0.075MM TO +0.095MM	0.002	0.0044
140	34150-16470	COLLAR ADJUSTING	1			1.5+0.105MM TO +0.125MM	0.002	0.0044
140	34150-16480	COLLAR ADJUSTING	1			1.5+0.135MM TO +0.155MM	0.002	0.0044
150	02018-50100	NUT	1				0.011	0.0242
160	31351-16250	WASHER SEAL	1				0.015	0.033
170	09500-16287	SEAL OIL	1				0.01	0.022

silverhorn.co.uk

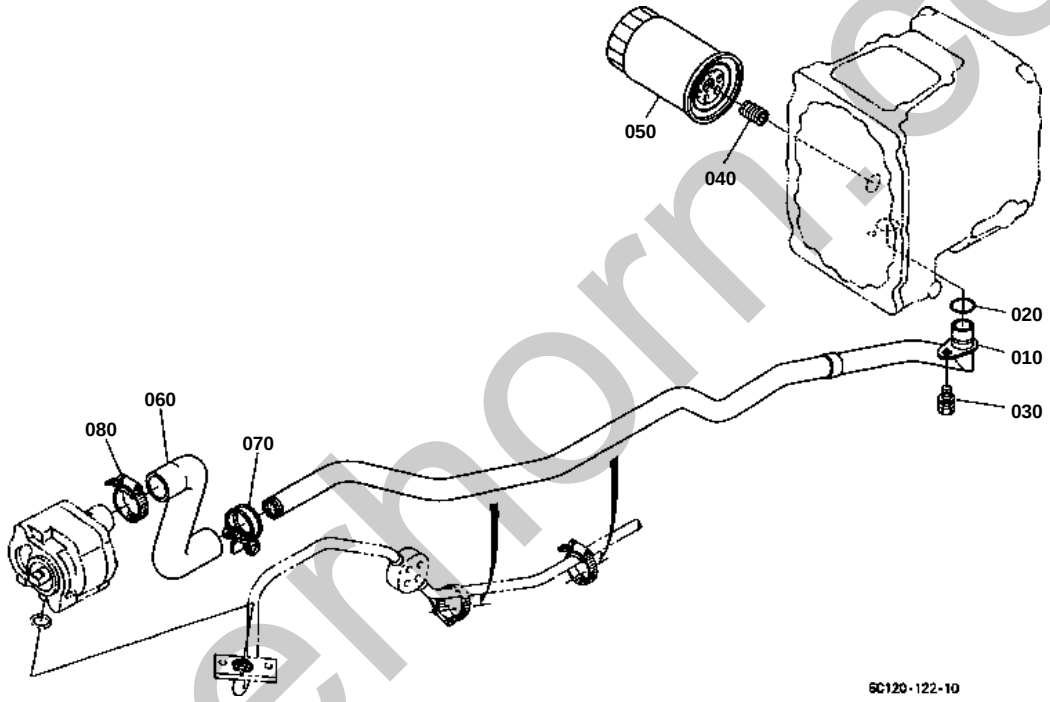

silvermorn.co.uk

HYDRAULIC OIL LINE(SUCTION)

↔ Interchangeable; ≠ not interchangeable; ← new for old; → old for new

REF.No	Part No.	Description	Q'ty	S.No.	I/C	REMARKS	Weight (kgf)	Weight (lb)
010	6C110-39113	PIPE SUCTION	1				0	0
020	04811-00200	O RING	1				0.001	0.0022
030	01123-50818	BOLT	1				0.012	0.0264
040	38240-37780	JOINT SCREW	1				0.03	0.066
050	67955-37710	CARTRIDGE OIL FILTER	1				0.39	0.858
060	6C090-39150	HOSE INLET	1				0.14	0.308
070	67980-58640	CLAMP HOSE	1				0.02	0.044
080	67955-36230	CLAMP	1				0.023	0.0506

silverhorn.co.uk

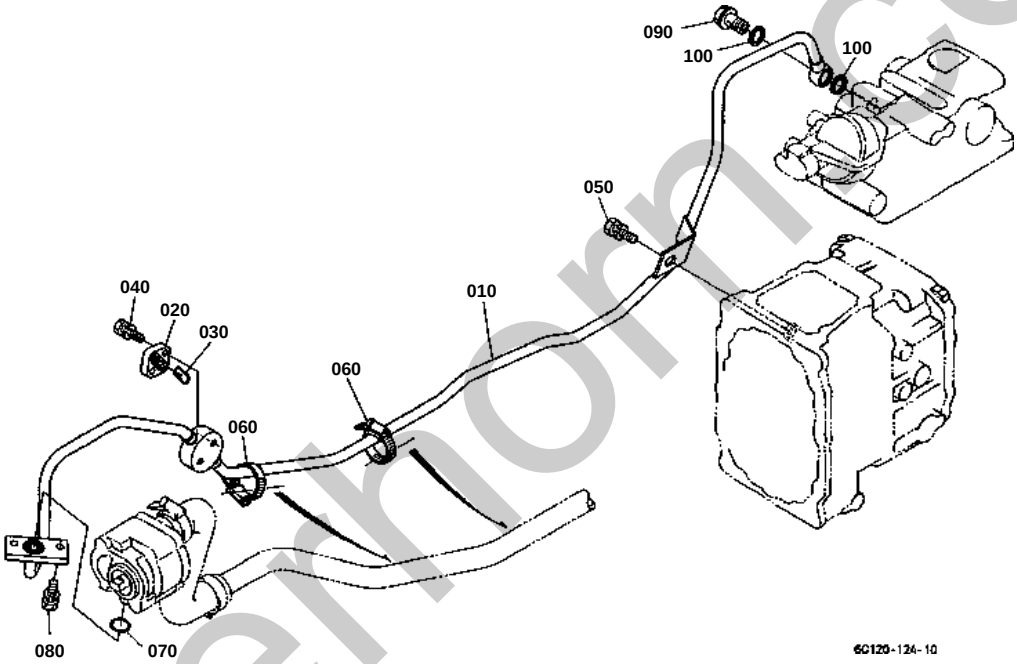

silvermorn.co.uk

HYDRAULIC OIL LINE(DELIVERY)

↔ Interchangeable; ≠ not interchangeable; ← new for old; → old for new

REF.No	Part No.	Description	Q'ty	S.No.	I/C	REMARKS	Weight (kgf)	Weight (lb)
010	6C110-39210	PIPE DELIVERY	1				0.92	2.024
020	6C040-36620	CAP	1				0.022	0.0484
030	37410-36630	O RING	1				0.001	0.0022
040	01123-50830	BOLT	2				0.015	0.033
050	01125-51022	BOLT	1				0	0
060	67955-36230	CLAMP	2				0.023	0.0506
070	04811-00200	O RING	1				0.001	0.0022
080	01123-50825	BOLT	2				0.013	0.0286
090	6A320-39290	BOLT JOINT	1				0.06	0.132
100	67111-37180	GASKET	2				0.003	0.0066

silverhorn.co.uk

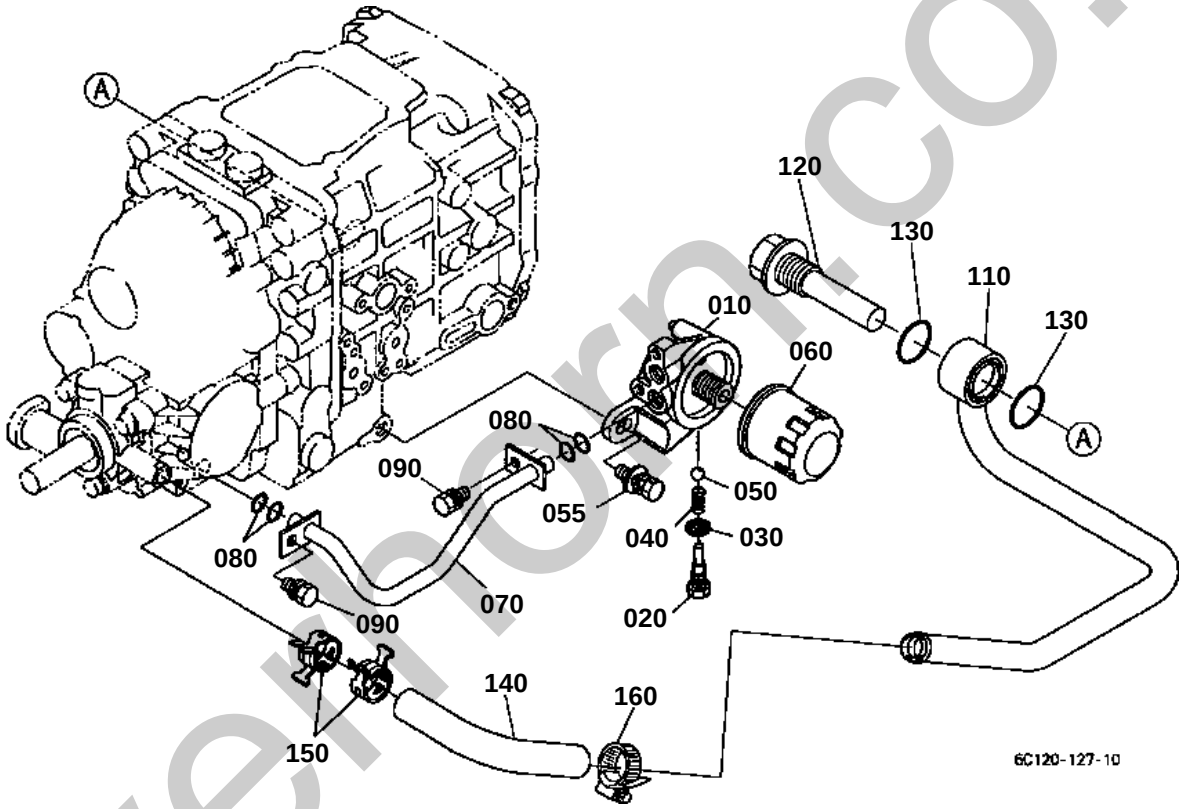

silverhorn.co.uk

HYDRAULIC OIL LINE (HST) [HST TYPE]

↔ Interchangeable; ≠ not interchangeable; ← new for old; → old for new

REF.No	Part No.	Description	Q'ty	S.No.	I/C	REMARKS	Weight (kgf)	Weight (lb)
010	6C050-39333	BRACKET FILTER	1				0.19	0.418
020	6C050-39382	BOLT	1				0.03	0.066
030	04717-01200	WASHER WITH RUBBER	1				0.002	0.0044
040	16851-36950	SPRING	1				0.02	0.044
050	07715-01605	BALL	1				0.003	0.0066
055	01125-51030	BOLT	1				0.03	0.066
060	66021-36060	CARTRIDGE OIL FILTER	1				0.34	0.748
070	6C150-39340	PIPE	1				0.115	0.253
080	04811-00120	O RING	4				0.001	0.0022
090	01123-50816	BOLT	2				0.011	0.0242
110	6C150-39120	PIPE	1				0.48	1.056
120	66021-36390	FILTER OIL	1				0.185	0.407
130	04811-10300	O RING	2				0.001	0.0022
140	32721-39130	HOSE	1				0.049	0.1078
150	32721-39160	CLAMP HOSE	2				0.005	0.011
160	67955-36230	CLAMP	1				0.023	0.0506

silverhorn.co.uk

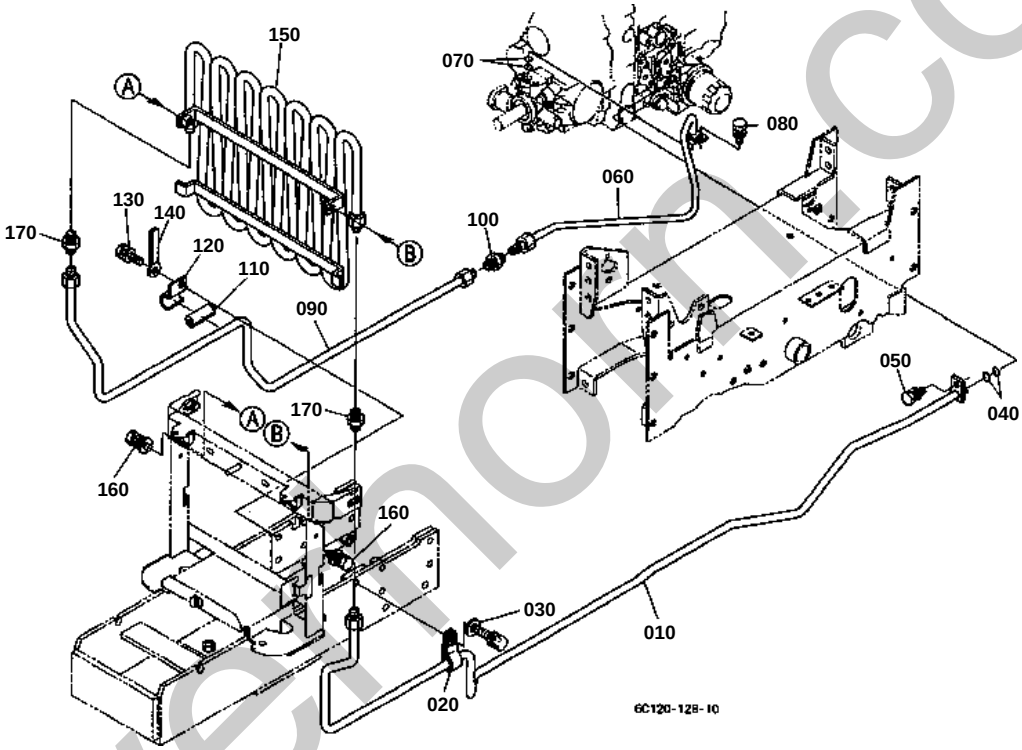

silvermoor.co.uk

120 6C050-3941-0
130 04013-50100

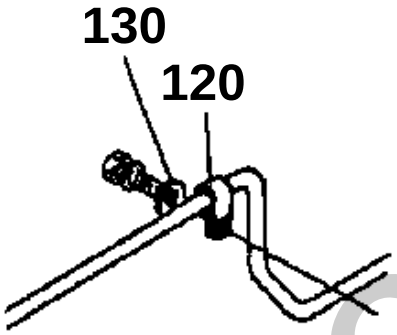

6C120-801-10

silverhorn.co.uk

HYDRAULIC OIL LINE (OIL COOLER) [HST TYPE]
[TYPE HST]

↔ Interchangeable; ≠ not interchangeable; ← new for old; → old for new

REF.No	Part No.	Description	Q'ty	S.No.	I/C	REMARKS	Weight (kgf)	Weight (lb)
010	6C110-39320	PIPE RETURN	1				0.54	1.188
020	6C050-39410	CLAMP PIPE	1				0.013	0.0286
030	04013-60100	WASHER PLAIN	1				0.004	0.0088
040	04811-00120	O RING	2				0.001	0.0022
050	01123-50816	BOLT	1				0.011	0.0242
060	6C150-39350	PIPE	1				0.2	0.44
070	04811-00120	O RING	2				0.001	0.0022
080	01123-50816	BOLT	1				0.011	0.0242
090	6C110-39360	PIPE	1				0.4	0.88
100	06013-51203	JOINT PIPE	1				0.035	0.077
110	6C140-39250	CUSHION	1	>=50341			0.014	0.0308
120	6C050-39410	CLAMP PIPE	1	<=50340			0.013	0.0286
120	6C140-39240	CLAMP	1	>=50341	≠		0.065	0.143
130	04013-60100	WASHER PLAIN	1	<=50340			0.004	0.0088
130	01135-51040	BOLT	1	>=50341	≠		0.034	0.0748
140	37150-34460	CLAMP CORD	1				0.03	0.066
150	6C130-58710	PIPE COOLER	1				1.76	3.872
160	01125-60816	BOLT	2	<=50589			0.01	0.022
160	01125-50818	BOLT	2	>=50590	≠		0.015	0.033
170	06013-51203	JOINT PIPE	2				0.035	0.077

silverhorn.co.uk

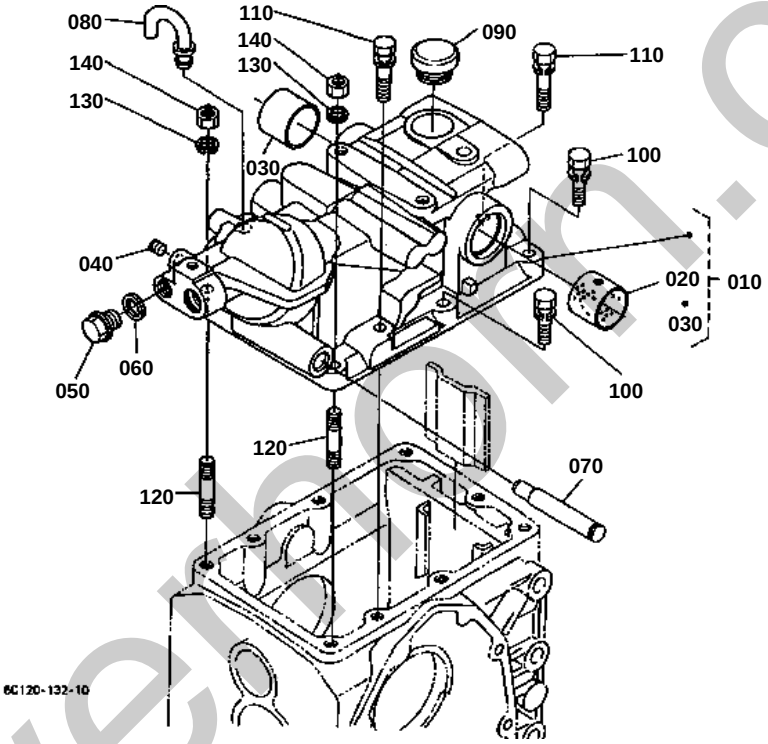

silverhorn.co.uk

HYDRAULIC CYLINDER

↔ Interchangeable; ≠ not interchangeable; ← new for old; → old for new

REF.No	Part No.	Description	Q'ty	S.No.	I/C	REMARKS	Weight (kgf)	Weight (lb)
010	6C120-36030	ASSY CASE CYLINDER	1				11.2	24.64
020	6A320-36490	BUSH	1				0.036	0.0792
030	6A320-36470	BUSH	1				0.048	0.1056
040	32701-36150	PLUG	1				0.005	0.011
050	37150-36730	PLUG	1				0.03	0.066
060	37150-36720	GASKET	1				0.01	0.022
070	6C120-42670	SHAFT FULCRUM	1				0.22	0.484
080	6A100-36410	BREATHER	1				0.006	0.0132
090	6A100-36420	PLUG OIL FILLER	1				0.018	0.0396
100	01123-51035	BOLT	5				0.025	0.055
110	01123-51045	BOLT	2				0.032	0.0704
120	01555-51035	STUD	2				0.029	0.0638
130	04512-60100	WASHER SPRING	2				0.002	0.0044
140	02118-50100	NUT	2				0.005	0.011

silverhorn.co.uk

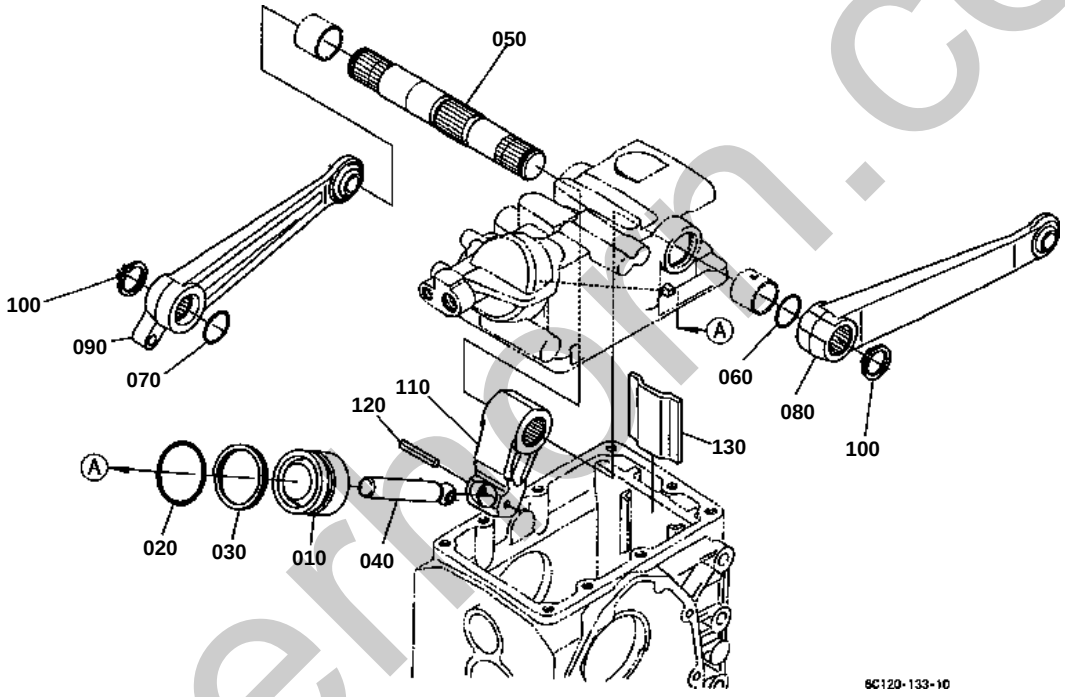

silvermoln.co.uk

HYDRAULIC PISTON/LIFT ARM

↔ Interchangeable; ≠ not interchangeable; ← new for old; → old for new

REF.No	Part No.	Description	Q'ty	S.No.	I/C	REMARKS	Weight (kgf)	Weight (lb)
010	6A320-36410	PISTON HYD.	1				0.61	1.342
020	04810-00550	O RING	1				0.008	0.0176
030	68773-21560	RING BACK UP	1				0.005	0.011
040	6A320-36430	ROD HYD.PISTON	1				0.35	0.77
050	6C120-36580	SHAFT HYD.ARM	1				0	0
060	04811-00300	O RING	1				0.002	0.0044
070	04811-00320	O RING	1				0.002	0.0044
080	6C120-36510	ARM LIFT LH	1				1.66	3.652
090	6C120-36520	ARM LIFT RH	1				1.6	3.52
100	04612-00300	CIR CLIP EXTERNAL	2				0.003	0.0066
110	6A320-36453	ARM HYDRAULIC	1				0.85	1.87
120	05411-00640	PIN SPRING	1				0.006	0.0132
130	6C040-36750	STOPPER	1				0.188	0.4136

silverhorn.co.uk

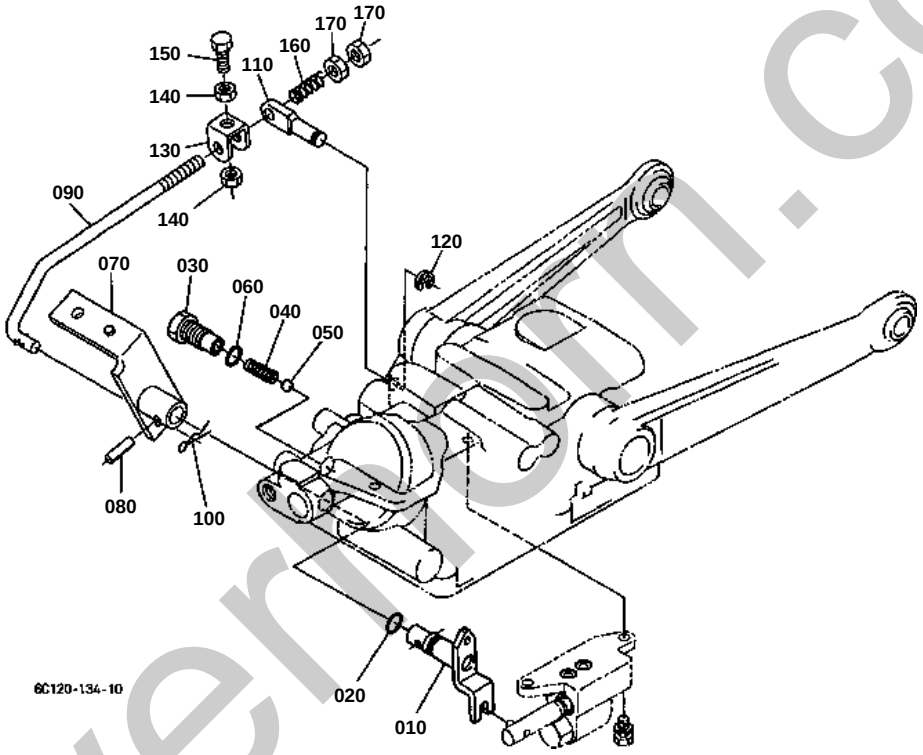

silverhorn.co.uk

FEED BACK LEVER

↔ Interchangeable; ≠ not interchangeable; ← new for old; → old for new

REF.No	Part No.	Description	Q'ty	S.No.	I/C	REMARKS	Weight (kgf)	Weight (lb)
010	6C090-36932	SHAFT CONTROL LEVER	1				0.1	0.22
020	04811-00110	O RING	1				0.001	0.0022
030	6C090-36060	PLUG	1				0.045	0.099
040	K3511-36080	SPRING	1				0.005	0.011
050	07715-01605	BALL	1				0.003	0.0066
060	04811-00140	O RING	1				0.001	0.0022
070	6C120-36270	ARM CONTROL LEVER	1				0	0
080	05411-00520	PIN SPRING	1				0.002	0.0044
090	6C090-36233	ROD FEED BACK	1				0	0
100	05525-50800	PIN SNAP	1				0.001	0.0022
110	6C090-36220	PIN FEED BACK	1				0.03	0.066
120	04613-50080	CIR CLIP EXTERNAL	1				0.001	0.0022
130	66611-36320	INTERLOCKER	1				0.022	0.0484
140	02112-50080	NUT	2				0.003	0.0066
150	01153-50822	BOLT	1				0.011	0.0242
160	68001-63250	SPRING	1				0.005	0.011
170	6C090-36460	NUT	2				0.006	0.0132

silverhorn.co.uk

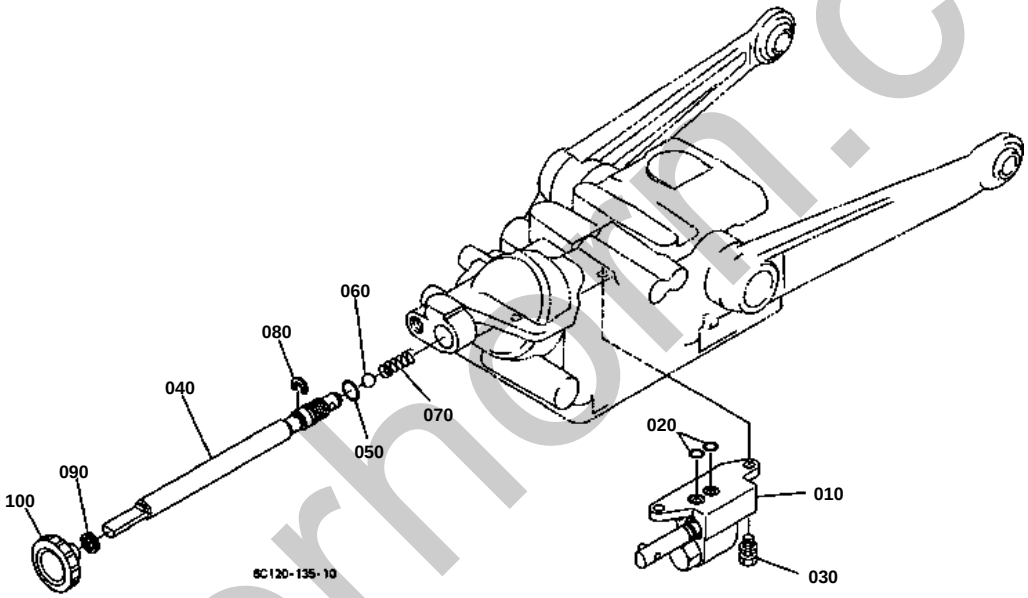

silverhorn.co.uk

CONTROL VALVE

↔ Interchangeable; ≠ not interchangeable; ← new for old; → old for new

REF.No	Part No.	Description	Q'ty	S.No.	I/C	REMARKS	Weight (kgf)	Weight (lb)
010	6C120-36200	ASSY VALVE CONTROL	1			REFER TO L.No.I14-L FOR COMPONENTS.	0.82	1.804
020	04810-00100	O RING	2				0.001	0.0022
030	01123-50825	BOLT	2				0.013	0.0286
040	6C120-37220	SHAFT HYD.ADJUST	1				0.17	0.374
050	04810-00100	O RING	1				0.001	0.0022
060	07715-03209	BALL	1				0.002	0.0044
070	6C120-37440	SPRING	1				0	0
080	6A320-37410	STOPPER	1				0.002	0.0044
090	04611-00190	CIR CLIP INTERNAL	1				0.001	0.0022
100	37410-36643	GRIP	1				0.03	0.066

silverhorn.co.uk

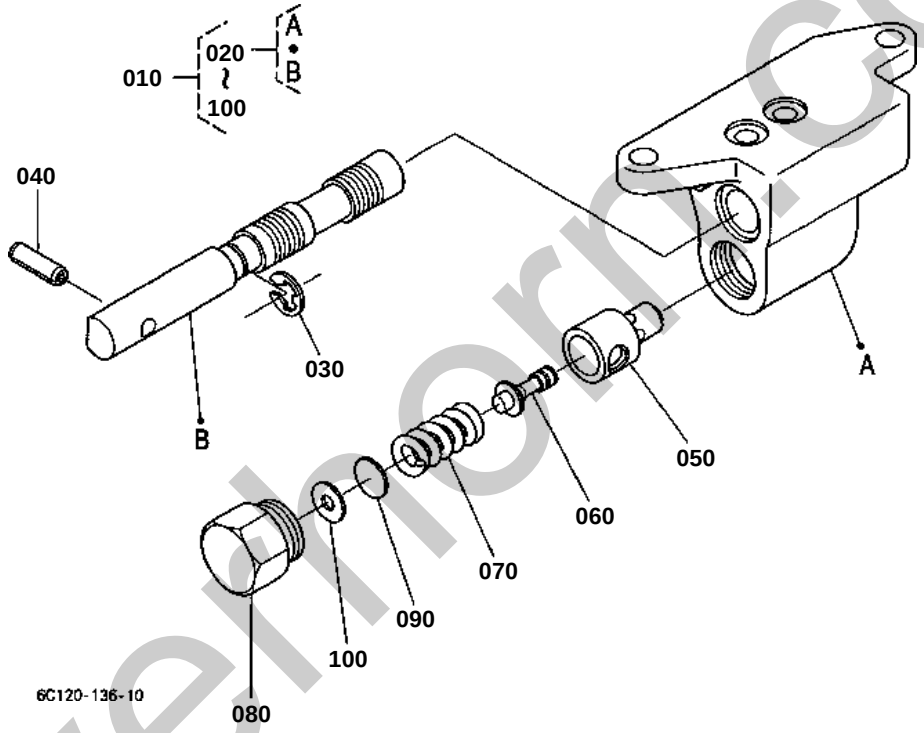

silverhorn.co.uk

CONTROL VALVE [COMPONENT PARTS]

↔ Interchangeable; ≠ not interchangeable; ← new for old; → old for new

REF.No	Part No.	Description	Q'ty	S.No.	I/C	REMARKS	Weight (kgf)	Weight (lb)
010	6C120-36200	ASSY VALVE CONTROL	1				0.82	1.804
020	6C120-36600	ASSY BODY-SPOOL	1				0.75	1.65
030	04613-50090	CIR CLIP EXTERNAL	1				0.001	0.0022
040	05411-00620	PIN SPRING	1				0.002	0.0044
050	31351-37930	SEAT RELIEF VALVE	1				0.02	0.044
060	31351-37940	POPPET	1				0.005	0.011
070	6C120-36680	SPRING RELIEF	1				0.009	0.0198
080	6C120-36690	PLUG	1				0.04	0.088
090	31351-37970	SHIM	1			0.10MM	0.001	0.0022
090	31351-37960	SHIM	1			0.20MM	0.001	0.0022
090	31351-37950	SHIM	1			0.40MM	0.001	0.0022
100	04013-60050	WASHER PLAIN	1				0.001	0.0022

silverhorn.co.uk

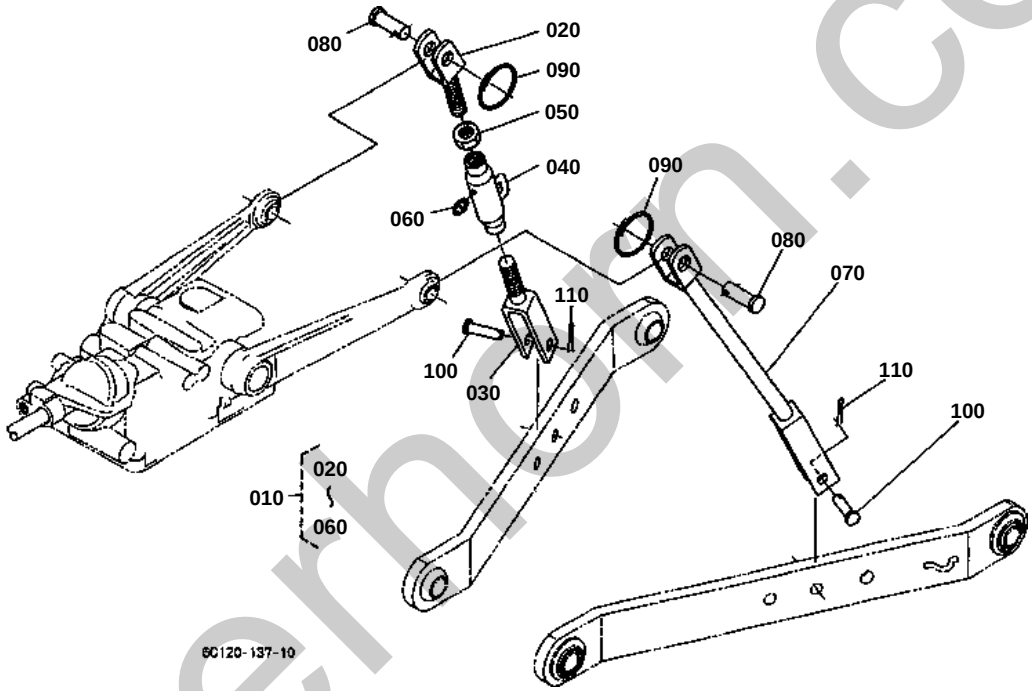

silverhorn.co.uk

3-POINT LINKAGE 2(LIFT ROD)

↔ Interchangeable; ≠ not interchangeable; ← new for old; → old for new

REF.No	Part No.	Description	Q'ty	S.No.	I/C	REMARKS	Weight (kgf)	Weight (lb)
010	6C140-65200	ASSY ROD LIFT RH	1				1.45	3.19
020	6C040-65230	ROD LIFT RH	1				0.36	0.792
030	6C140-65240	ROD LIFT RH	1				0.62	1.364
040	6C070-65250	ROD LIFT MIDDLE	1				0.45	0.99
050	02172-50180	NUT	1				0.021	0.0462
060	06613-10675	NIPPLE GREASE	1				0.003	0.0066
070	6C140-65270	ROD LIFT LH	1				1.2	2.64
080	05122-51645	PIN JOINT	2				0.075	0.165
090	67156-34340	RING SNAP	2				0.01	0.022
100	05122-51240	PIN JOINT	2				0.039	0.0858
110	05511-50425	PIN SPLIT	2				0.003	0.0066

silverhorn.co.uk

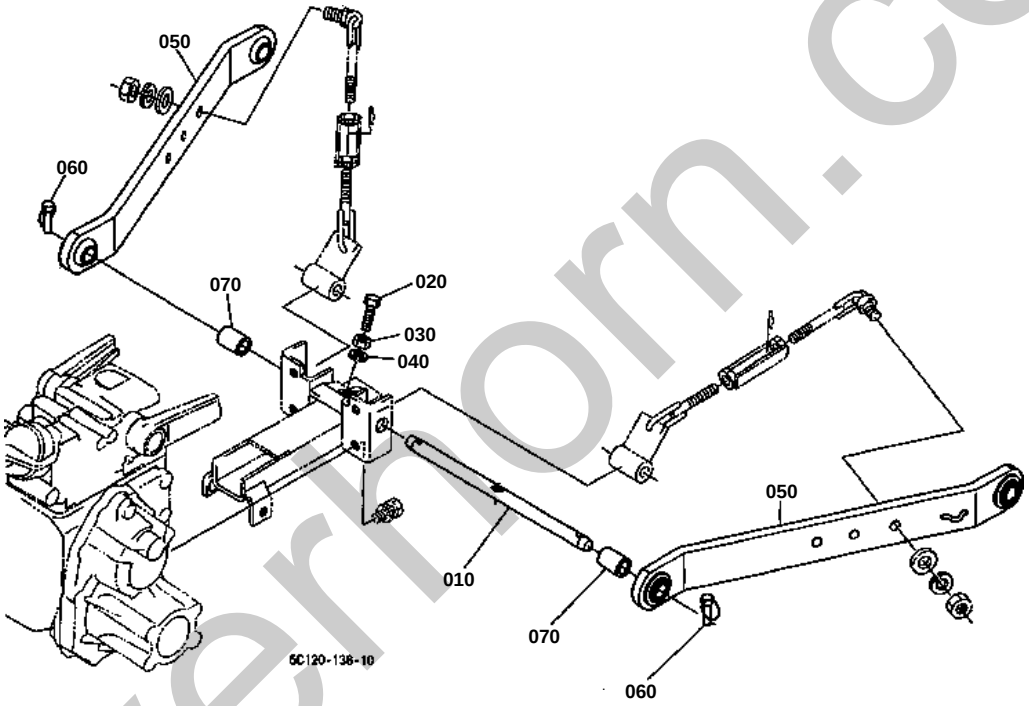

silverhorn.co.uk

LOWER LINK

↔ Interchangeable; ≠ not interchangeable; ← new for old; → old for new

REF.No	Part No.	Description	Q'ty	S.No.	I/C	REMARKS	Weight (kgf)	Weight (lb)
010	6C040-66010	PIN LOWER LINK	1				1.14	2.508
020	6C040-65120	BOLT	1				0.02	0.044
030	02018-50100	NUT	1				0.011	0.0242
040	04512-60100	WASHER SPRING	1				0.002	0.0044
050	6C040-65210	COMP.LINK LOWER	2				5.24	11.528
060	34150-37640	PIN SET	4				0.06	0.132
070	66204-65350	SPACER	2				0.12	0.264

silverhorn.co.uk

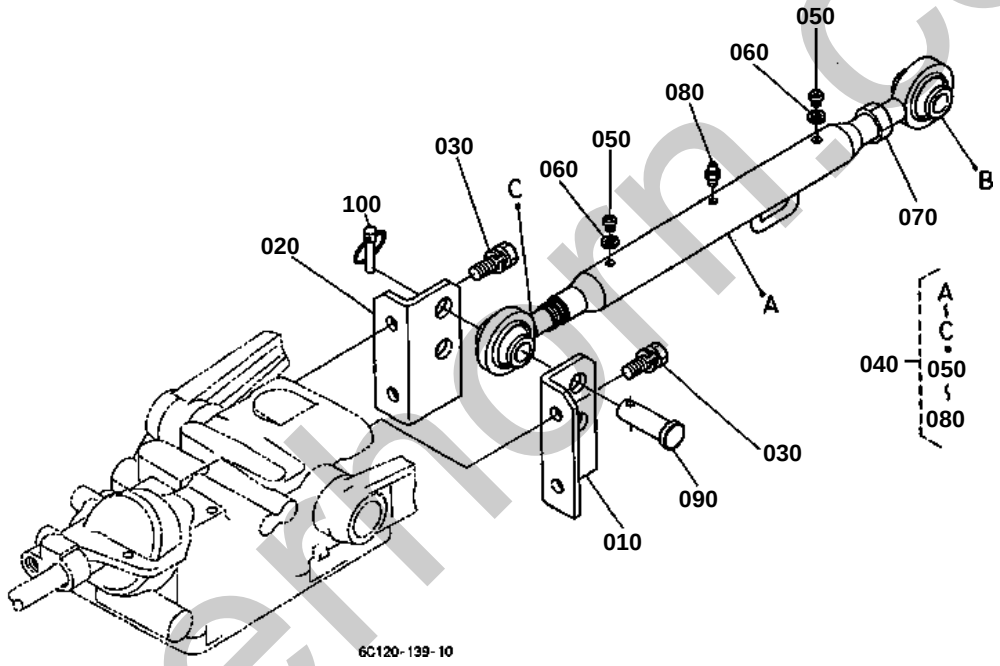

silverthorn.co.uk

3-POINT LINKAGE 1(LOWER LINK)

↔ Interchangeable; ≠ not interchangeable; ← new for old; → old for new

REF.No	Part No.	Description	Q'ty	S.No.	I/C	REMARKS	Weight (kgf)	Weight (lb)
010	6C040-65190	BRACKET TOP LINK LH	1				0.65	1.43
020	6C040-65160	BRACKET TOP LINK RH	1				0.65	1.43
030	01123-51230	BOLT	4				0.04	0.088
040	6C070-65400	ASSY LINK TOP	1				2.12	4.664
050	03014-50606	SCREW PAN-HEAD	2				0	0
060	04512-60060	WASHER SPRING	2				0.001	0.0022
070	02152-50200	NUT	1				0.032	0.0704
080	06613-10675	NIPPLE GREASE	1				0.003	0.0066
090	31150-71360	PIN JOINT	2				0.166	0.3652
100	34150-37640	PIN SET	2				0.06	0.132

silverhorn.co.uk

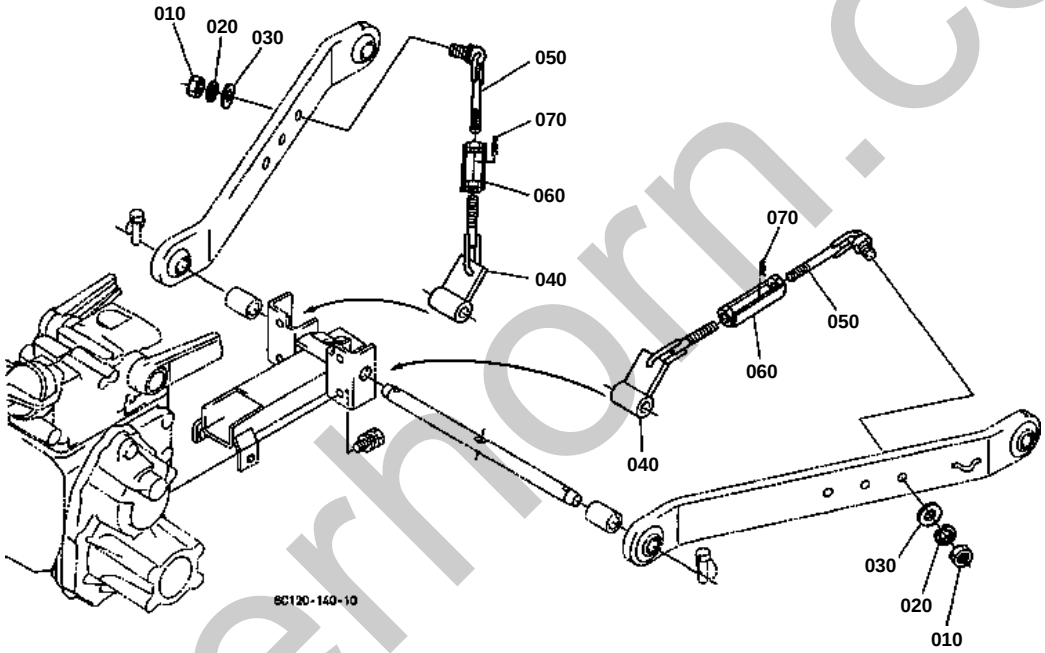

silverhorn.co.uk

CHECK CHAIN

↔ Interchangeable; ≠ not interchangeable; ← new for old; → old for new

REF.No	Part No.	Description	Q'ty	S.No.	I/C	REMARKS	Weight (kgf)	Weight (lb)
010	02174-50160	NUT	2				0.022	0.0484
020	04512-60160	WASHER SPRING	2				0.01	0.022
030	04015-60160	WASHER PLAIN	2				0.058	0.1276
040	6C040-65290	BRACKET CHECK CHAIN	2				0.52	1.144
050	6C040-65320	BOLT TURNBUCKLE	2				0.34	0.748
060	6C040-65390	TURNBUCKLE	2				0.2	0.44
070	05515-61200	PIN SNAP	2				0.005	0.011

silverhorn.co.uk

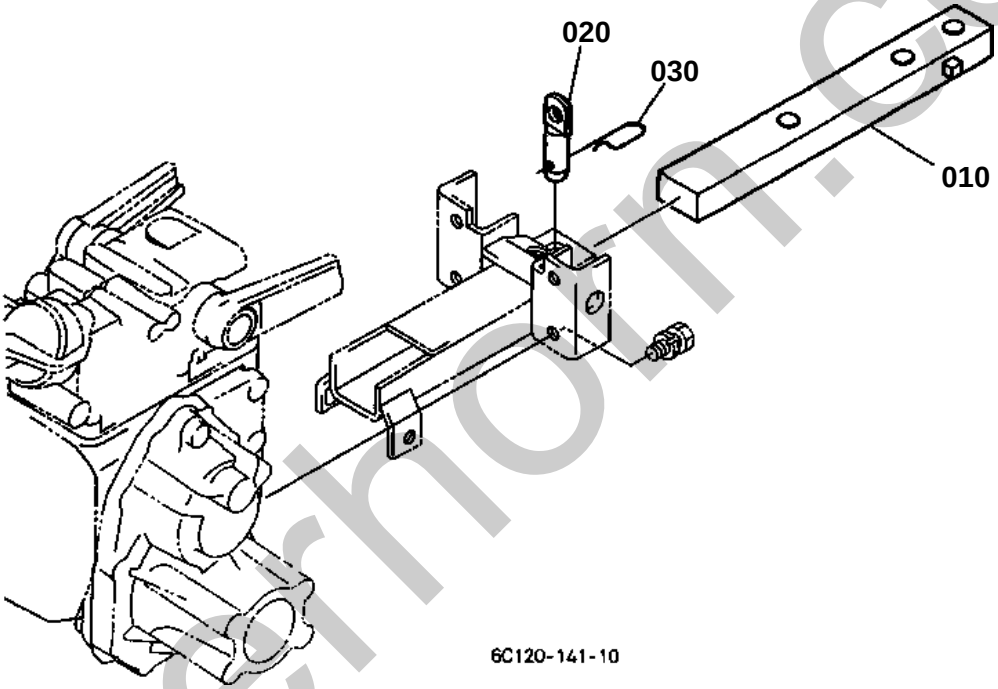

silvermorn.co.uk

DRAWBAR

↔ Interchangeable; ≠ not interchangeable; ← new for old; → old for new

REF.No	Part No.	Description	Q'ty	S.No.	I/C	REMARKS	Weight (kgf)	Weight (lb)
010	6C040-67110	DRAWBAR	1				4.5	9.9
020	6C040-65610	PIN HITCH	1				0.18	0.396
030	31150-29730	PIN SPRING	1				0.044	0.0968

silverhorn.co.uk

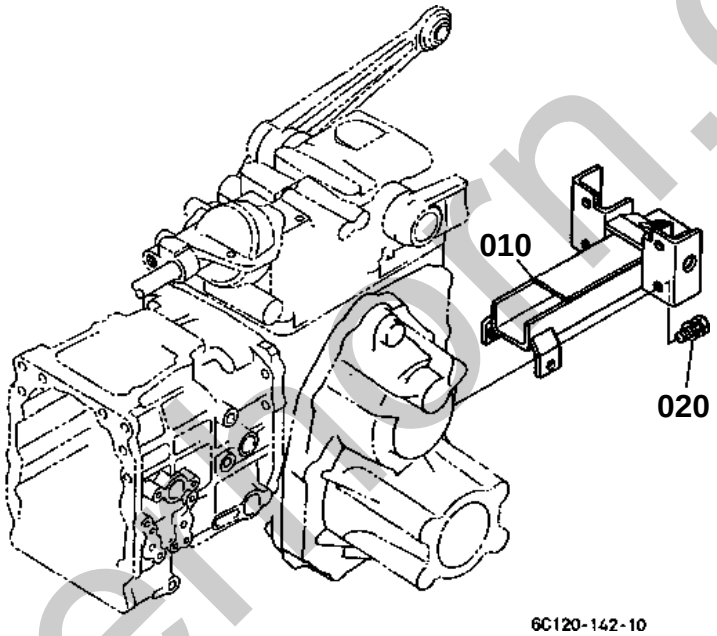

silvermorn.co.uk

↔ Interchangeable; ≠ not interchangeable; ← new for old; → old for new

REF.No	Part No.	Description	Q'ty	S.No.	I/C	REMARKS	Weight (kgf)	Weight (lb)
010	6C040-65604	COMP.HITCH	1				3.35	7.37
020	01123-51230	BOLT	4				0.04	0.088

silverhorn.co.uk

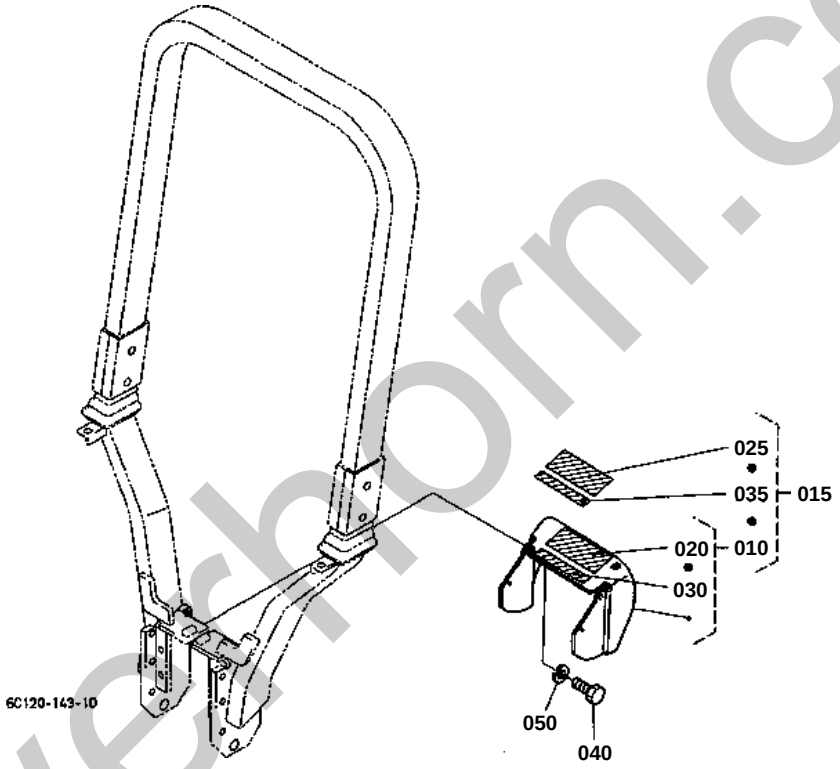

silverhorn.co.uk

PTO PROTECTOR [EXCEPT[AU]]

↔ Interchangeable; ≠ not interchangeable; ← new for old; → old for new

REF.No	Part No.	Description	Q'ty	S.No.	I/C	REMARKS	Weight (kgf)	Weight (lb)
010	6C140-72100	KIT COVER PTO (A)	1			ENGLISH	1.36	2.992
015	6C140-72000	KIT COVER PTO (B)	1			FRENCH	1.38	3.036
020	TA040-49590	LABEL PTO WARNING	1			ENGLISH	0.002	0.0044
025	TA041-49590	LABEL PTO WARNING	1			FRENCH	0.005	0.011
030	6C140-47440	LABEL DRAWBAR	1			ENGLISH	0.001	0.0022
035	6C141-47440	LABEL DRAWBAR	1			FRENCH	0.001	0.0022
040	01153-50820	BOLT	2				0.012	0.0264
050	04512-50080	WASHER SPRING	2				0.001	0.0022

silverhorn.co.uk

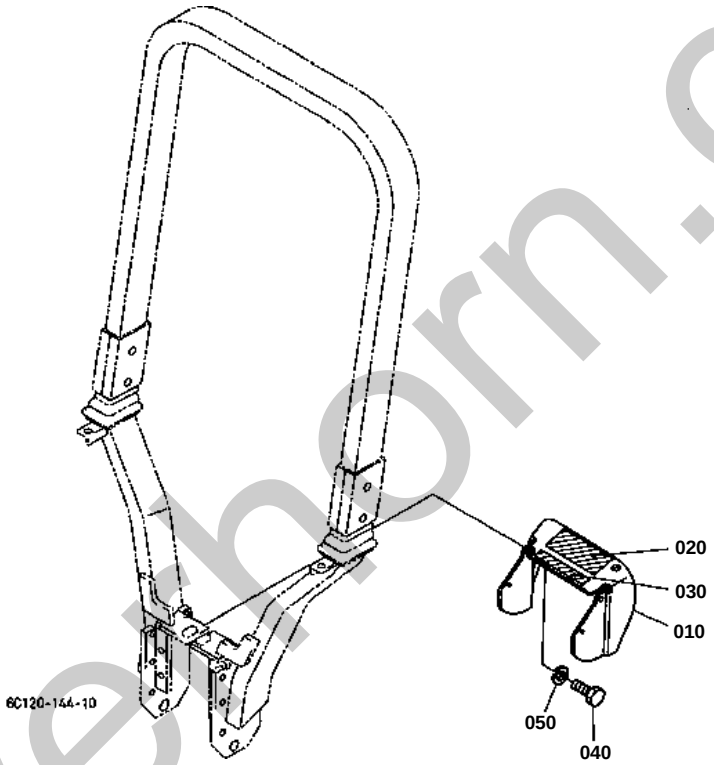

silverhorn.co.uk

PTO PROTECTOR [AU]

↔ Interchangeable; ≠ not interchangeable; ← new for old; → old for new

REF.No	Part No.	Description	Q'ty	S.No.	I/C	REMARKS	Weight (kgf)	Weight (lb)
010	6C140-72150	COVER PTO	1				1.3	2.86
020	TA040-49590	LABEL PTO WARNING	1				0.002	0.0044
030	6C140-47440	LABEL DRAWBAR	1				0.001	0.0022
040	01153-50820	BOLT	2				0.012	0.0264
050	04512-50080	WASHER SPRING	2				0.001	0.0022

silverhorn.co.uk

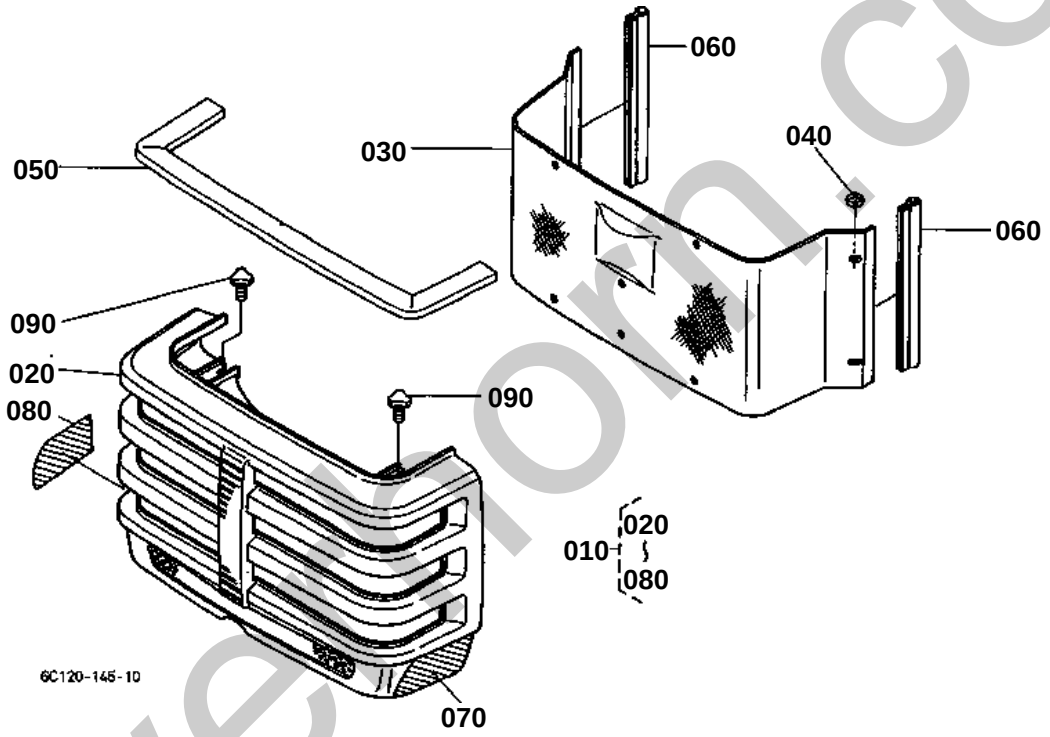

silverthorn.co.uk

FRONT GRILLE [EXCEPT[AU]]

↔ Interchangeable; ≠ not interchangeable; ← new for old; → old for new

REF.No	Part No.	Description	Q'ty	S.No.	I/C	REMARKS	Weight (kgf)	Weight (lb)
010	6C120-54400	COMP.COVER FRONT	1				0.95	2.09
020	6A325-54415	COVER FRONT	1				0.62	1.364
030	6C090-54432	NET	1				0.25	0.55
040	6C040-54540	NUT	16				0.001	0.0022
050	6C090-54140	SPONGE	1				0.02	0.044
060	6C090-51512	SEAL RUBBER	2				0.03	0.066
070	6C090-47350	MARK	1				0.002	0.0044
080	6C090-47360	MARK	1				0.002	0.0044
090	37410-52610	SCREW KNOB	2				0.015	0.033

silverhorn.co.uk

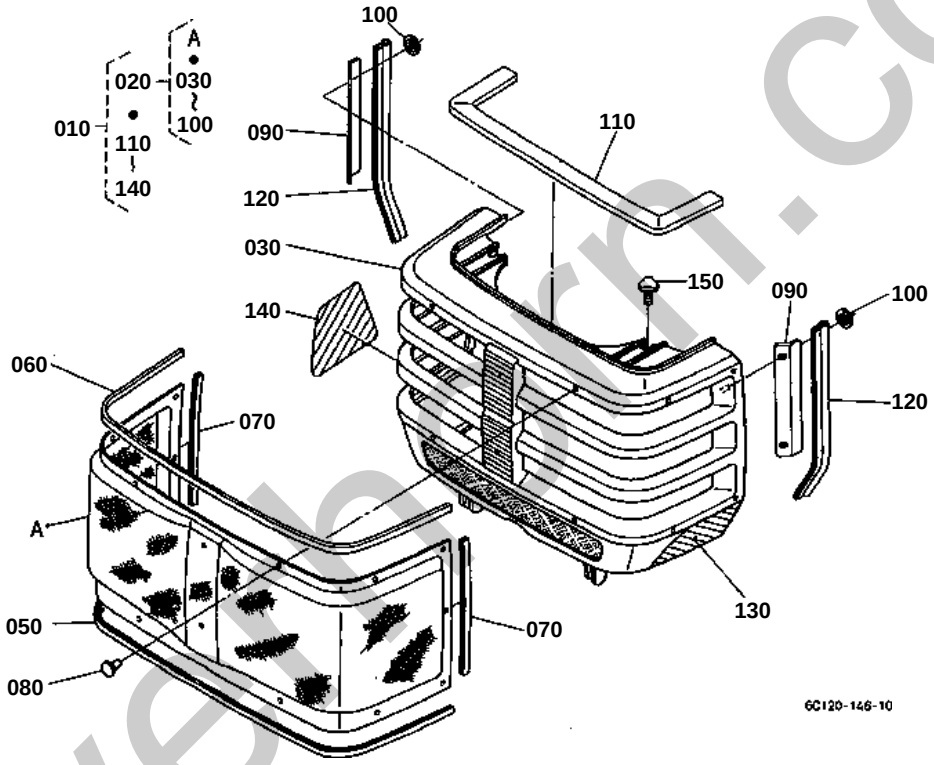

silvethorn.co.uk

FRONT GRILLE [AU]

↔ Interchangeable; ≠ not interchangeable; ← new for old; → old for new

REF.No	Part No.	Description	Q'ty	S.No.	I/C	REMARKS	Weight (kgf)	Weight (lb)
010	6C125-54402	COMP.COVER FRONT	1				1.14	2.508
020	6C125-54600	COMP.NET FRONT	1				1.06	2.332
030	6A325-54415	COVER FRONT	1				0.62	1.364
050	6C095-54630	CUSHION	1				0.04	0.088
060	6C095-54640	CUSHION	1				0.043	0.0946
070	6C095-54650	CUSHION	2				0.012	0.0264
080	6C045-54660	RIVET	20				0.001	0.0022
090	6C095-54620	STAY	2				0.02	0.044
100	6C040-54540	NUT	4				0.001	0.0022
110	6C090-54140	SPONGE	1				0.02	0.044
120	76611-53150	TRIM SHUTTER PLATE	2				0.04	0.088
130	6C090-47350	MARK	1				0.002	0.0044
140	6C090-47360	MARK	1				0.002	0.0044
150	37410-52610	SCREW KNOB	2				0.015	0.033

silverhorn.co.uk

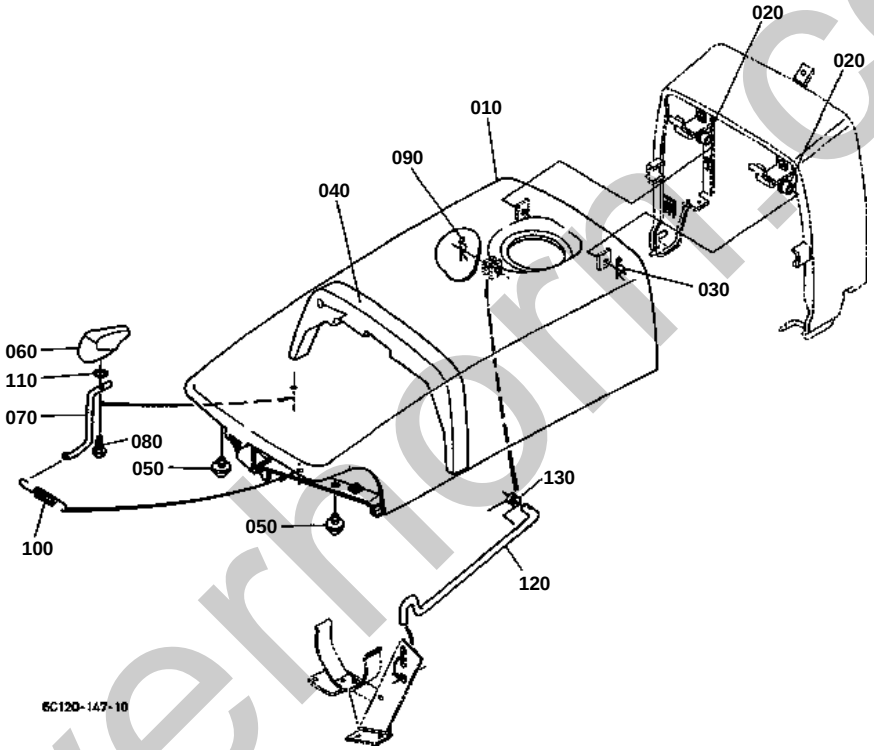

silvermoor.co.uk

BONNET

↔ Interchangeable; ≠ not interchangeable; ← new for old; → old for new

REF.No	Part No.	Description	Q'ty	S.No.	I/C	REMARKS	Weight (kgf)	Weight (lb)
010	6C090-54100	COMP.BONNET	1				4.22	9.284
020	6A100-54190	BUSH	2				0.001	0.0022
030	05525-50800	PIN SNAP	1				0.001	0.0022
040	6A320-54463	CUSHION	1				0.08	0.176
050	6C090-54162	CUSHION	2				0.013	0.0286
060	6C040-54260	HANDLE MASCOT	1				0.028	0.0616
070	6C090-54270	LEVER HANDLE	1				0.09	0.198
080	03614-50416	SCREW TAPPING	1				0.002	0.0044
090	05525-50800	PIN SNAP	1				0.001	0.0022
100	6C040-54150	SPRING	1				0.006	0.0132
110	04811-10080	O RING	1				0.001	0.0022
120	6C090-54253	ROD BONNET	1				0.12	0.264
130	6C090-54510	SPRING	1				0.007	0.0154

silverhorn.co.uk

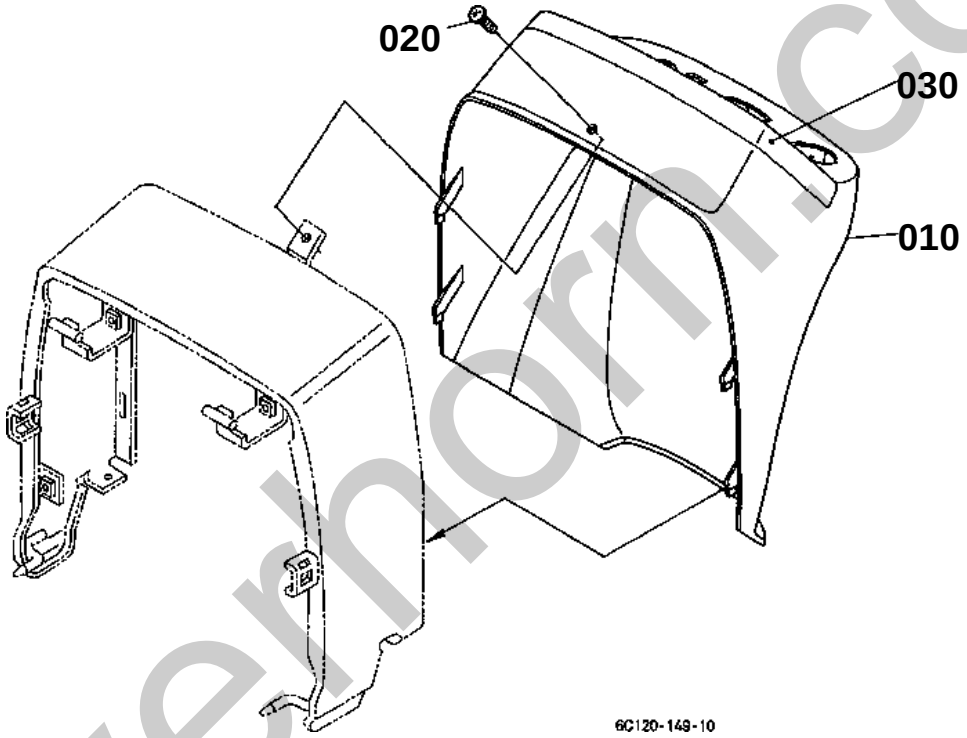

silverhorn.co.uk

PANEL COVER

↔ Interchangeable; ≠ not interchangeable; ← new for old; → old for new

REF.No	Part No.	Description	Q'ty	S.No.	I/C	REMARKS	Weight (kgf)	Weight (lb)
010	6C120-53510	COVER PANEL	1				4.25	9.35
020	37410-61720	SCREW	1				0.001	0.0022
030	6C140-53520	COVER FRAME	1				0.13	0.286

silverhorn.co.uk

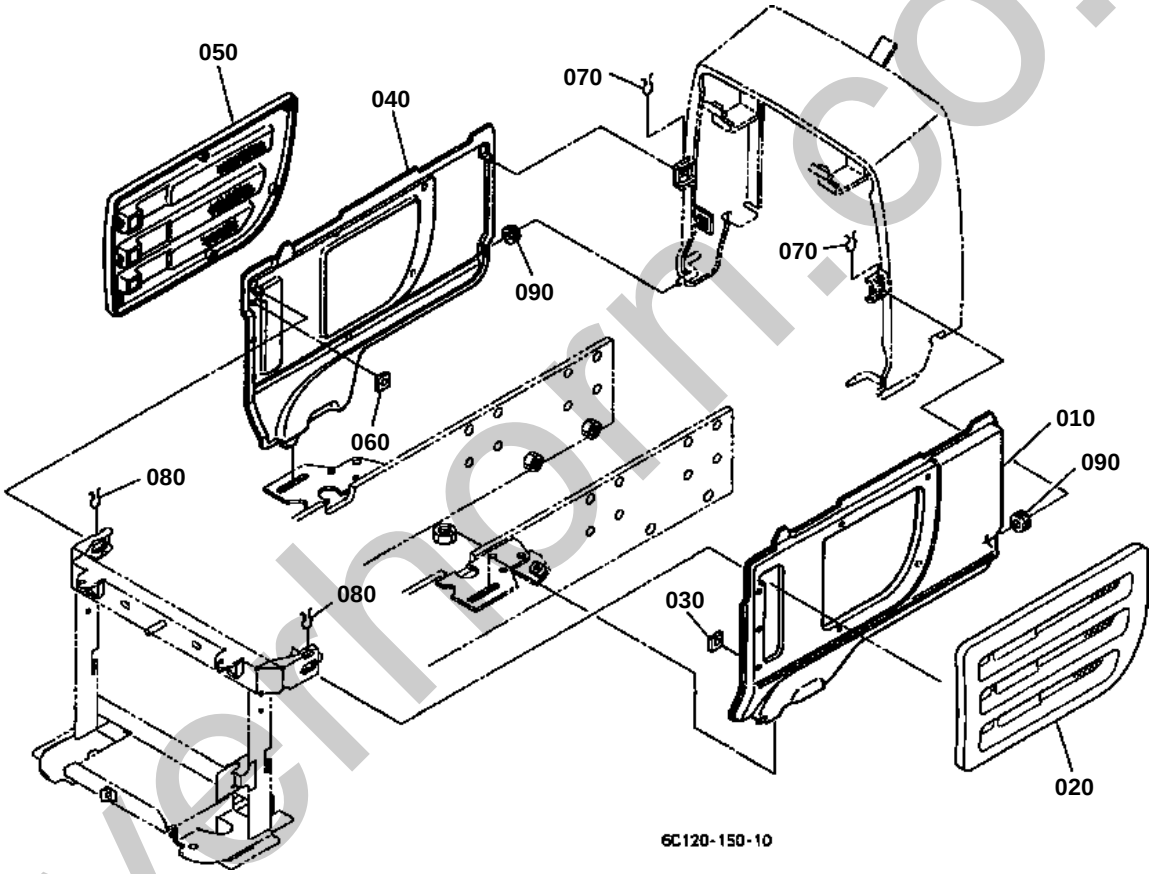

silverthorn.co.uk

SIDE COVER

↔ Interchangeable; ≠ not interchangeable; ← new for old; → old for new

REF.No	Part No.	Description	Q'ty	S.No.	I/C	REMARKS	Weight (kgf)	Weight (lb)
010	6C090-54324	COMP.COVER SIDE	1				1.09	2.398
020	6C070-54330	COVER	1				0.23	0.506
030	55611-44190	NUT	7				0.004	0.0088
040	6C090-54354	COMP.COVER SIDE	1				1.085	2.387
050	6C070-54380	COVER	1				1.8	3.96
060	55611-44190	NUT	7				0.004	0.0088
070	6C040-54364	SPRING	2				0.004	0.0088
080	6C040-54364	SPRING	2				0.004	0.0088
090	66591-54580	RUBBER RELEASE ROD	2				0.003	0.0066

silverhorn.co.uk

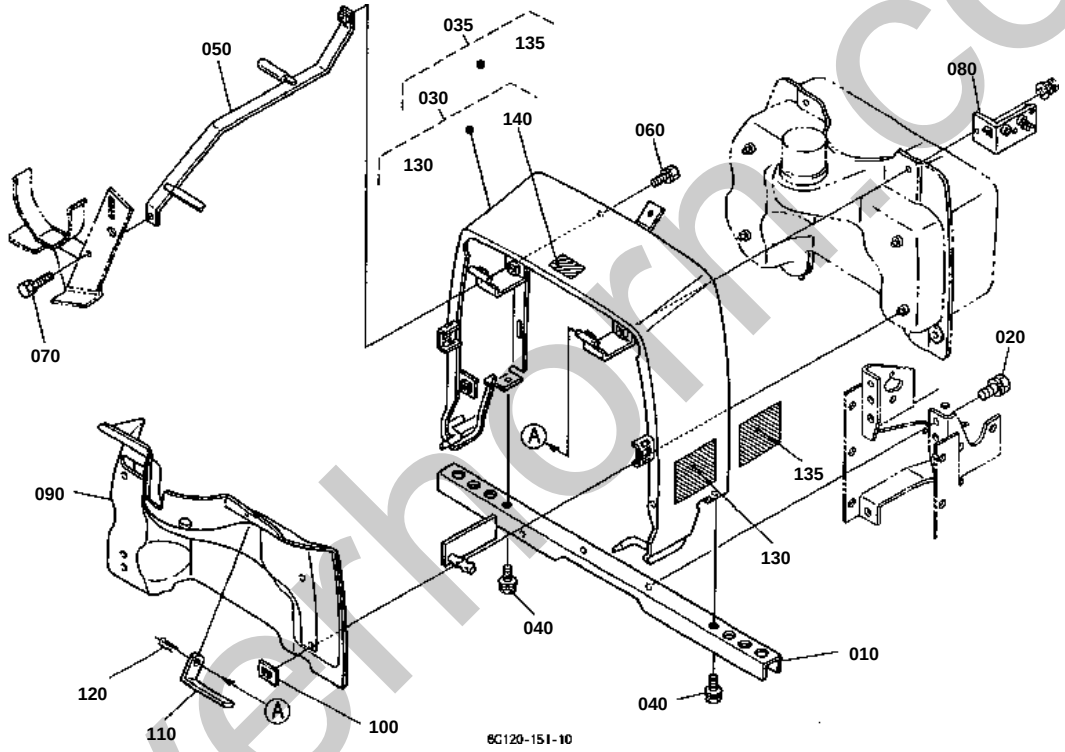

silverhorn.co.uk

SHUTTER PLATE [EXCEPT[AU]]

↔ Interchangeable; ≠ not interchangeable; ← new for old; → old for new

REF.No	Part No.	Description	Q'ty	S.No.	I/C	REMARKS	Weight (kgf)	Weight (lb)
010	6C090-54213	PILLAR CENTER	1				1.6	3.52
020	01133-51022	BOLT	2				0.025	0.055
030	6C090-54204	KIT PILLER CENTER	1			ENGLISH	5	11
035	6C090-99200	KIT B PILLAR CENTER	1			FRENCH	0	0
040	6C040-54610	BOLT	2				0.014	0.0308
050	6C090-54230	STAY PILLAR	1				0.355	0.781
060	01023-50616	BOLT	1				0.005	0.011
070	01023-50625	BOLT	1				0.007	0.0154
080	6A320-54280	BRACKET	1				0.1	0.22
090	6C090-54554	COVER HEAT PROOF	1				0.21	0.462
100	52300-26210	NUT	4				0.002	0.0044
110	6C090-54570	PLATE	1				0.072	0.1584
120	05525-50800	PIN SNAP	1				0.001	0.0022
130	6C090-49650	LABEL START CAUTION	1			ENGLISH	0.005	0.011
135	6C091-49650	LABEL START CAUTION	1			FRENCH	0.01	0.022
140	6C040-47412	LABEL FILLER CAUTION	1				0.001	0.0022

silverhorn.co.uk

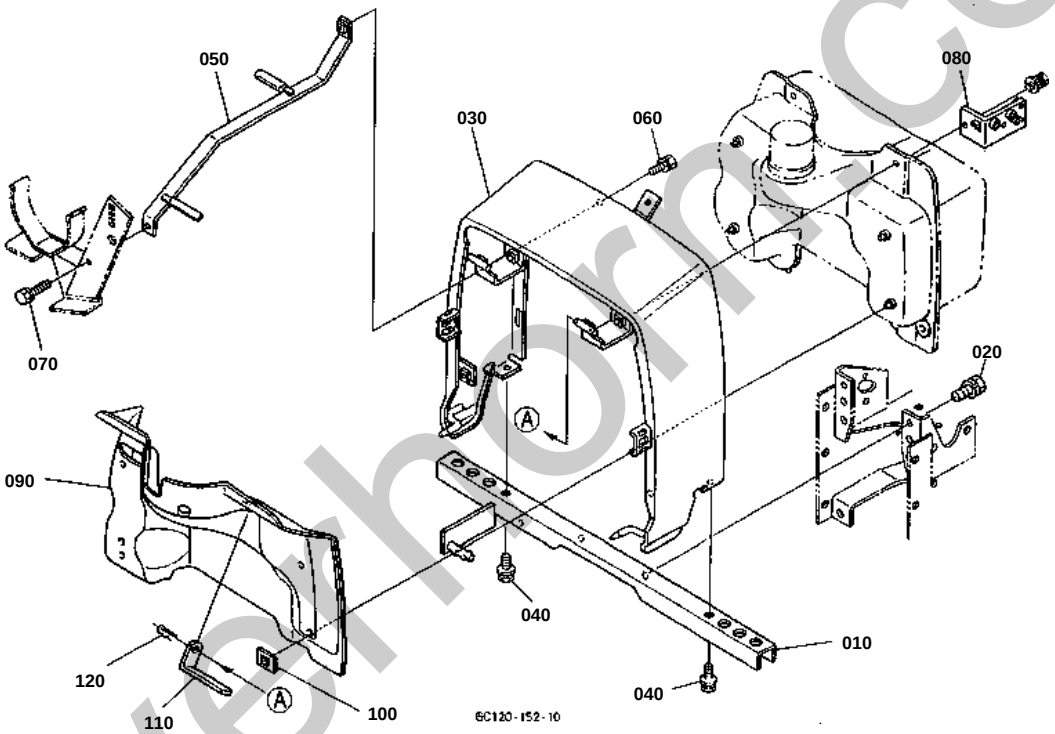

silverhorn.co.uk

SHUTTER PLATE [AU]

↔ Interchangeable; ≠ not interchangeable; ← new for old; → old for new

REF.No	Part No.	Description	Q'ty	S.No.	I/C	REMARKS	Weight (kgf)	Weight (lb)
010	6C090-54213	PILLAR CENTER	1				1.6	3.52
020	01133-51022	BOLT	2				0.025	0.055
030	6C090-54225	PILLAR CENTER	1				3.41	7.502
040	6C040-54610	BOLT	2				0.014	0.0308
050	6C090-54230	STAY PILLAR	1				0.355	0.781
060	01023-50616	BOLT	1				0.005	0.011
070	01023-50625	BOLT	1				0.007	0.0154
080	6A320-54280	BRACKET	1				0.1	0.22
090	6C090-54554	COVER HEAT PROOF	1				0.21	0.462
100	52300-26210	NUT	4				0.002	0.0044
110	6C090-54570	PLATE	1				0.072	0.1584
120	05525-50800	PIN SNAP	1				0.001	0.0022

silverhorn.co.uk

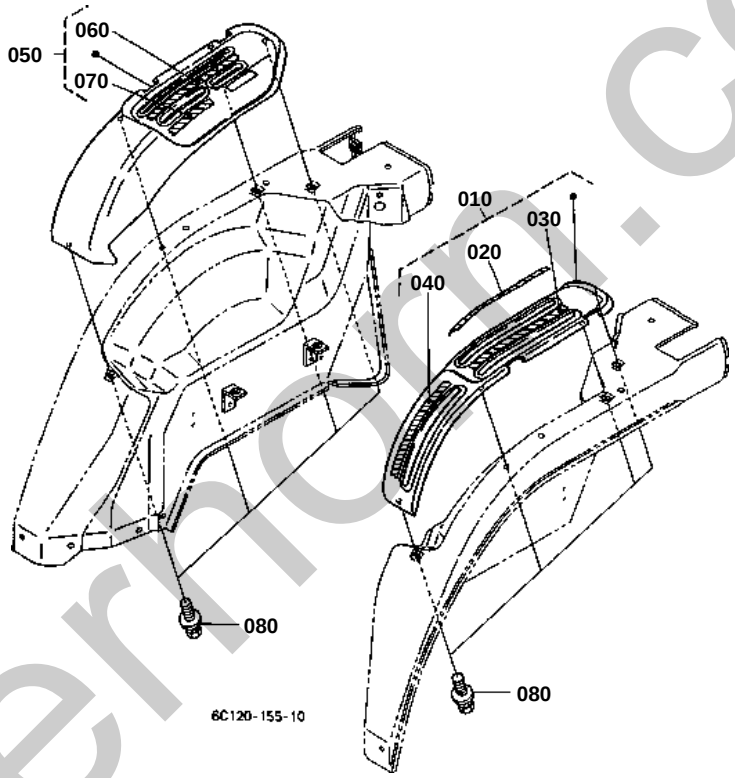

silverhorn.co.uk

LEVER GUIDE [HST TYPE]

↔ Interchangeable; ≠ not interchangeable; ← new for old; → old for new

REF.No	Part No.	Description	Q'ty	S.No.	I/C	REMARKS	Weight (kgf)	Weight (lb)
010	6C130-52100	ASSY GUIDE LEVER LH	1				0.35	0.77
020	6C120-47300	LABEL MID PTO	1				0.001	0.0022
030	6C120-47320	LABEL PTO	1				0.001	0.0022
040	6C130-47330	LABEL RANGE SHIFT	1				0.001	0.0022
050	6C130-52190	ASSY GUIDE LEVER RH	1				0.32	0.704
060	6C120-47350	LABEL HYDRAULIC	1				0.002	0.0044
070	6C040-47362	LABEL 4WD	1				0.001	0.0022
080	01025-50612	BOLT	8				0.005	0.011

silverhorn.co.uk

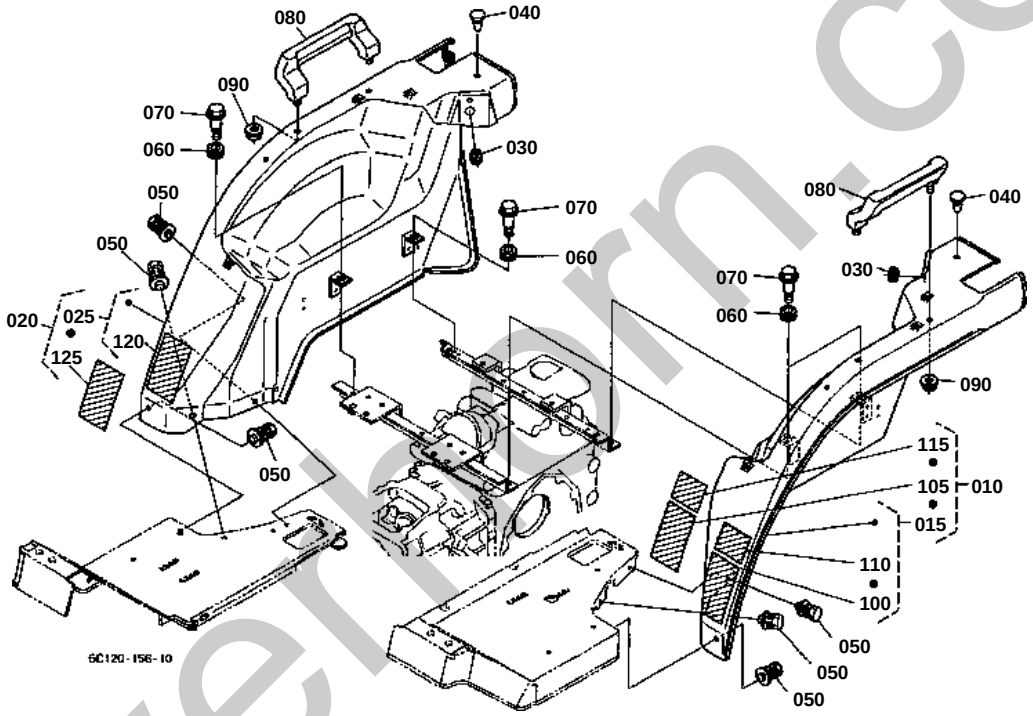

silverhorn.co.uk

↔ Interchangeable; ≠ not interchangeable; ← new for old; → old for new

REF.No	Part No.	Description	Q'ty	S.No.	I/C	REMARKS	Weight (kgf)	Weight (lb)
010	6C120-99130	KIT FENDER LH (A)	1			ENGLISH	0	0
015	6C120-99100	KIT FENDER LH (B)	1			FRENCH	0	0
020	6C040-99140	KIT FENDER RH (A)	1			ENGLISH	5.36	11.792
025	6C040-99160	KIT FENDER RH (B)	1			FRENCH	0	0
030	32150-29180	CAP RUBBER	2				0.002	0.0044
040	38240-29570	PLUG	2				0.001	0.0022
050	01125-50818	BOLT	6				0.015	0.033
060	6A100-51380	CUSHION	4				0.003	0.0066
070	6C040-51342	BOLT	4				0.017	0.0374
080	6C070-52170	HANDRAIL	2				0.25	0.55
090	02131-50100	NUT	4				0.01	0.022
100	6C070-47420	LABEL SAFETY	1			ENGLISH	0.005	0.011
105	6C071-47420	LABEL SAFETY	1			FRENCH	0.001	0.0022
110	6C120-47450	LABEL PTO	1			ENGLISH	0.001	0.0022
115	6C121-47450	LABEL PTO	1			FRENCH	0	0
120	TA040-49320	LABEL ROPS WARNING	1			ENGLISH	0.001	0.0022
125	TA040-49150	LABEL ROPS WARNING	1			FRENCH	0.003	0.0066

silverhorn.co.uk

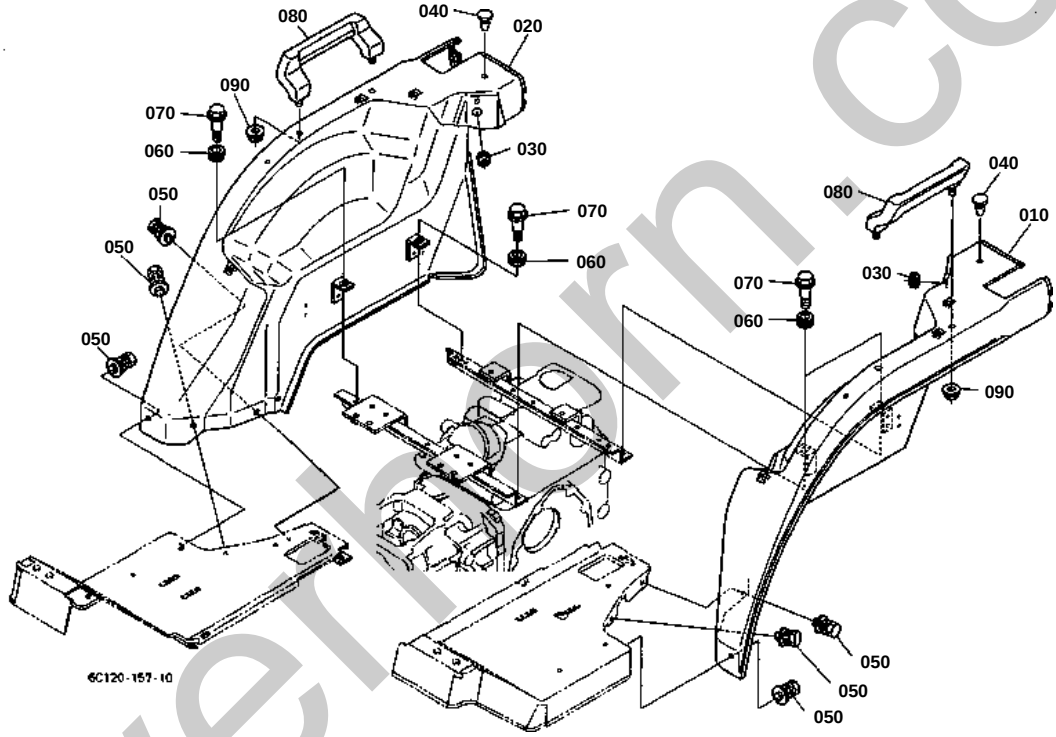

silverhorn.co.uk

FENDER [AU]

↔ Interchangeable; ≠ not interchangeable; ← new for old; → old for new

REF.No	Part No.	Description	Q'ty	S.No.	I/C	REMARKS	Weight (kgf)	Weight (lb)
010	6C040-52714	FENDER LH	1				6.8	14.96
020	6C040-52724	FENDER RH	1				3.4	7.48
030	32150-29180	CAP RUBBER	2				0.002	0.0044
040	38240-29570	PLUG	2				0.001	0.0022
050	01125-50818	BOLT	6				0.015	0.033
060	6A100-51380	CUSHION	4				0.003	0.0066
070	6C040-51342	BOLT	4				0.017	0.0374
080	6C070-52170	HANDRAIL	2				0.25	0.55
090	02131-50100	NUT	4				0.01	0.022

silverhorn.co.uk

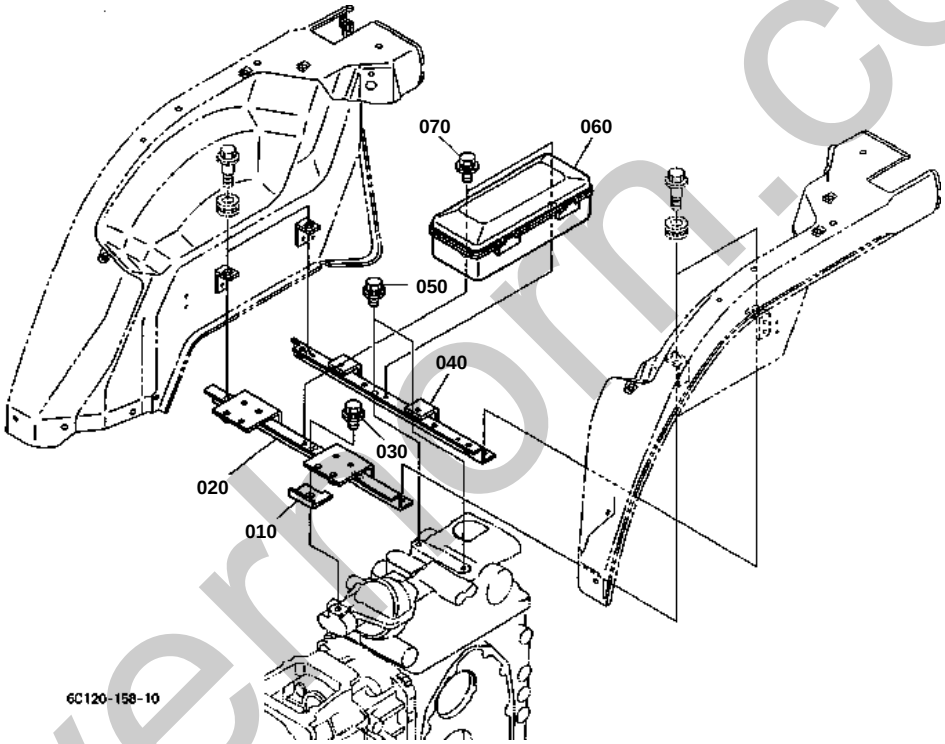

silverthorn.co.uk

FENDER STAY

↔ Interchangeable; ≠ not interchangeable; ← new for old; → old for new

REF.No	Part No.	Description	Q'ty	S.No.	I/C	REMARKS	Weight (kgf)	Weight (lb)
010	6C090-52882	PLATE	1				0.05	0.11
020	6C140-52730	STAY FENDER	1				1.1	2.42
030	01125-50818	BOLT	1				0.015	0.033
040	6C140-52740	STAY FENDER	1				0.82	1.804
050	01125-51020	BOLT	2				0.005	0.011
060	6C040-52790	CASE TOOLS	1				0.23	0.506
070	01025-50616	BOLT	2				0.005	0.011

silverhorn.co.uk

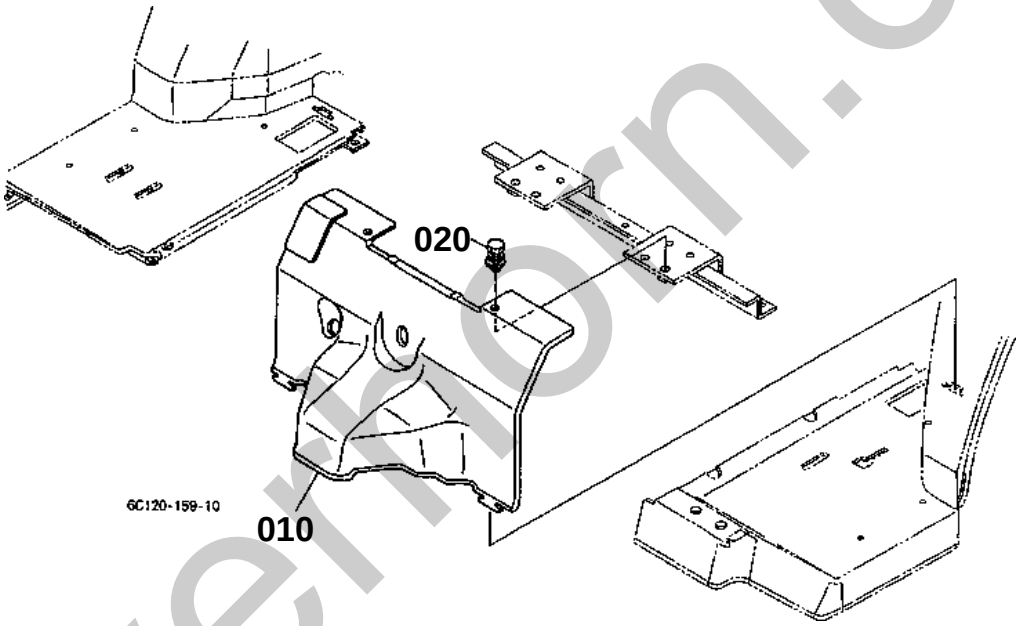

silverthorn.co.uk

FLOOR SEAT

↔ Interchangeable; ≠ not interchangeable; ← new for old; → old for new

REF.No	Part No.	Description	Q'ty	S.No.	I/C	REMARKS	Weight (kgf)	Weight (lb)
010	6C040-51370	COVER SEAT UNDER	1				0.38	0.836
020	01125-50818	BOLT	2				0.015	0.033

silverhorn.co.uk

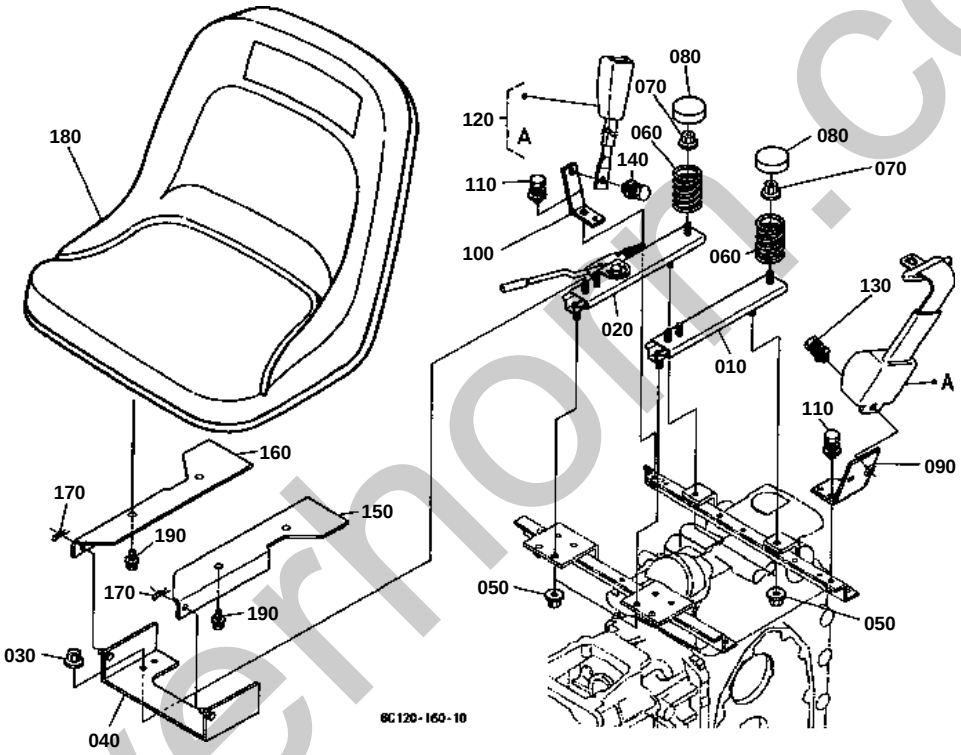

silvermoon.co.uk

SEAT SUPPORT

↔ Interchangeable; ≠ not interchangeable; ← new for old; → old for new

REF.No	Part No.	Description	Q'ty	S.No.	I/C	REMARKS	Weight (kgf)	Weight (lb)
010	6C140-45910	ADJUSTER SEAT LH	1				0.65	1.43
020	6C140-45920	ADJUSTER SEAT RH	1				0.85	1.87
030	02121-50080	NUT	4				0.01	0.022
040	6C140-45950	STAY SEAT RAIL	1				1.02	2.244
050	02121-50080	NUT	4				0.01	0.022
060	6C040-45990	SPRING SEAT	2				0.2	0.44
070	02121-50080	NUT	2				0.01	0.022
080	66301-52820	CAP SPRING	2				0.04	0.088
090	6C040-52760	STAY SEAT BELT LH	1				0.3	0.66
100	6C040-52770	STAY SEAT BELT RH	1				0.1	0.22
110	01125-50818	BOLT	2				0.015	0.033
120	K2561-56850	SEAT BELT ASSY	1				0.81	1.782
130	01135-61020	BOLT	1				0.015	0.033
140	01135-61025	BOLT	1				0.04	0.088
150	6C090-45960	STAY SEAT LH	1				0.87	1.914
160	6C090-45970	STAY SEAT RH	1				0.87	1.914
170	05525-50800	PIN SNAP	2				0.001	0.0022
180	K1122-56112	ASSY SEAT	1				0	0
190	0Y171-50508	BOLT FLANGE	4				0	0

silverhorn.co.uk

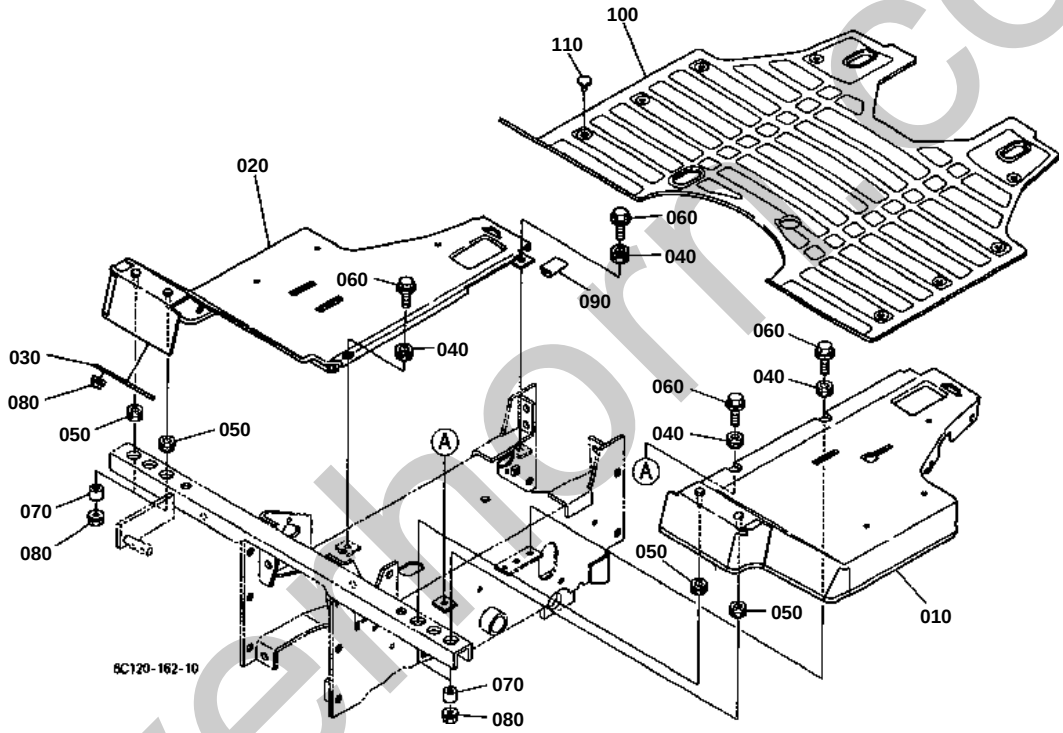

silverthorn.co.uk

STEP

↔ Interchangeable; ≠ not interchangeable; ← new for old; → old for new

REF.No	Part No.	Description	Q'ty	S.No.	I/C	REMARKS	Weight (kgf)	Weight (lb)
010	6C040-51319	STEP LH	1				2.22	4.884
020	6C040-51326	STEP RH	1				2.2	4.84
030	6C040-51330	SUPPORT STEP RH	1				0.073	0.1606
040	6A100-51380	CUSHION	4				0.003	0.0066
050	6A100-51380	CUSHION	4				0.003	0.0066
060	6C040-51342	BOLT	4				0.017	0.0374
070	6C040-51390	COLLAR	4				0.003	0.0066
080	02121-50080	NUT	6				0.01	0.022
090	6C040-51350	CUSHION	1				0.002	0.0044
100	6C110-51360	MAT STEP	1				2.3	5.06
110	67955-51340	STOPPER	12				0.001	0.0022

silverhorn.co.uk

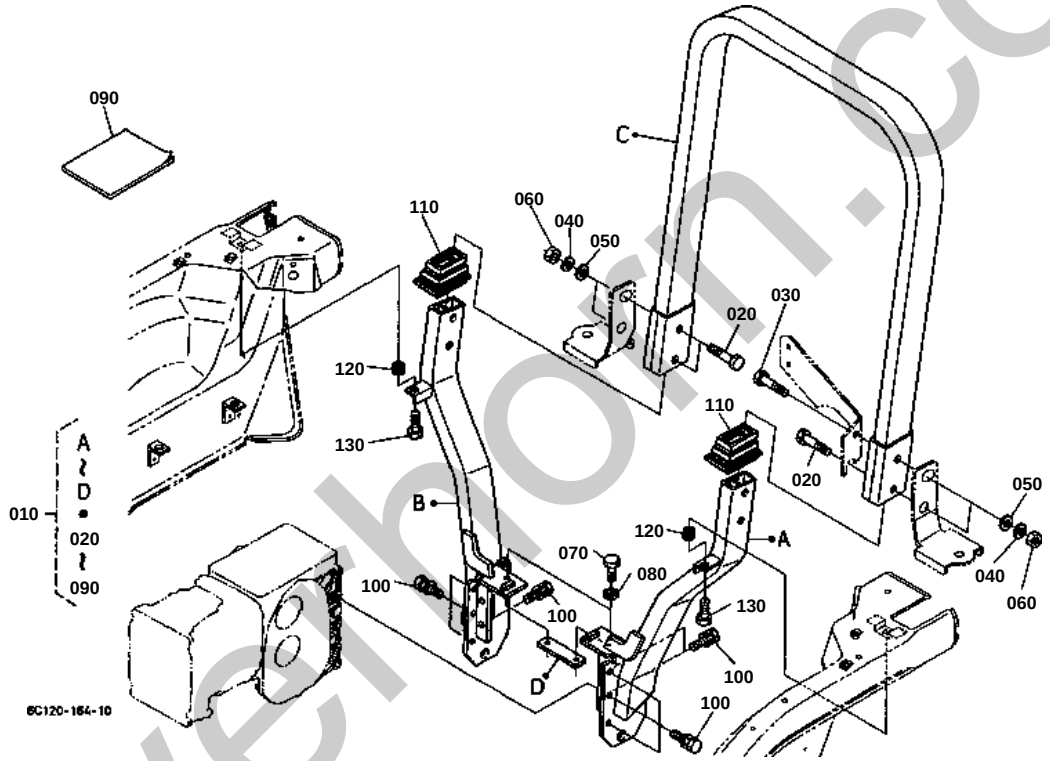

silverthorn.co.uk

↔ Interchangeable; ≠ not interchangeable; ← new for old; → old for new

REF.No	Part No.	Description	Q'ty	S.No.	I/C	REMARKS	Weight (kgf)	Weight (lb)
010	6C140-88100	ASSY ROPS	1				0	0
020	75599-04655	HEX.BOLT	3				0	0
030	75599-04660	HEX.BOLT	1				0	0
040	75599-33016	WASHER SPRING	4				0.08	0.176
050	75599-32016	WASHER PLAIN	4				0.009	0.0198
060	75599-31066	HEX.NUT	4				0	0
070	75599-04320	BOLT HEXAGON	2				0.02	0.044
080	75599-33013	WASHER SPRING	2				0	0
090	6C140-88450	MANUAL INSTRUCTION	1				0	0
100	01123-51235	BOLT	10				0.041	0.0902
110	6C040-72210	COVER ROPS	2				0.066	0.1452
120	6A100-51380	CUSHION	2				0.003	0.0066
130	6C040-51342	BOLT	2				0.017	0.0374

silverhorn.co.uk

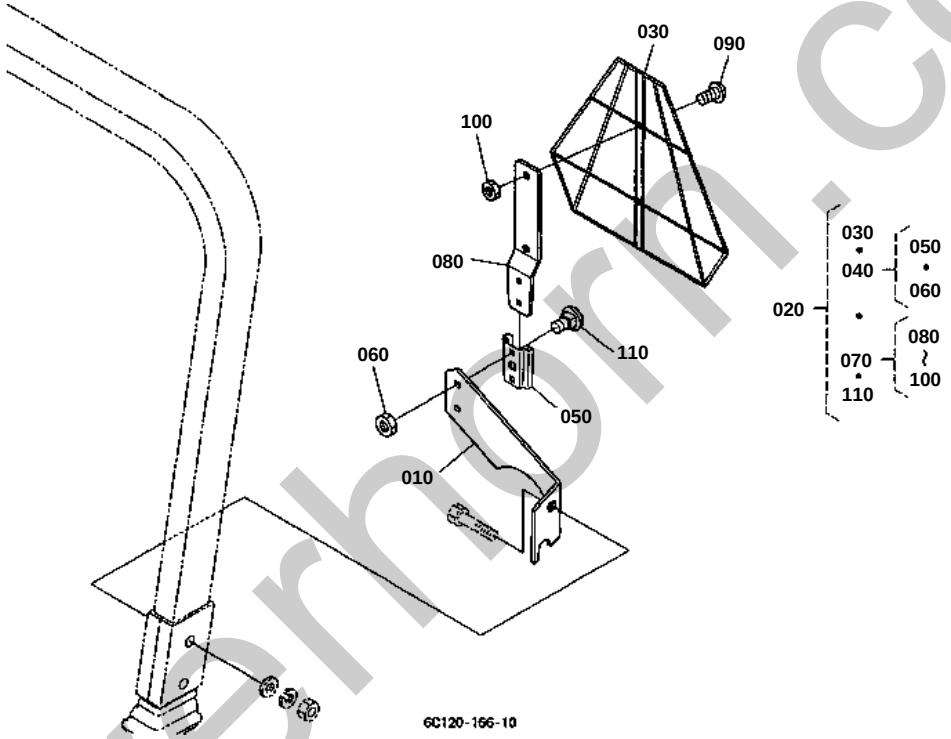

silverhorn.co.uk

SMV EMBLEM

↔ Interchangeable; ≠ not interchangeable; ← new for old; → old for new

REF.No	Part No.	Description	Q'ty	S.No.	I/C	REMARKS	Weight (kgf)	Weight (lb)
010	6C140-54950	BRACKET SMV	1				0.85	1.87
020	7L500-89900	SMV SIGN KIT	1				0	0
030	7L500-89910	SIGN SMV	1				0	0
040	7L500-89920	SOCKET SMV SIGN	1				0	0
050	7L500-89930	SOCKET-MTG SMV	1				0	0
060	7L500-89950	NUT	2				0	0
070	7L500-89960	SPADE SMV SIGN	1				0	0
080	7L500-89970	SPADE-MTG SMV	1				0	0
090	7L500-89980	VIS	2				0	0
100	7L500-89990	NUT	2				0	0
110	7L500-89810	BOLT SQUARE NECK	2				0	0

silverhorn.co.uk

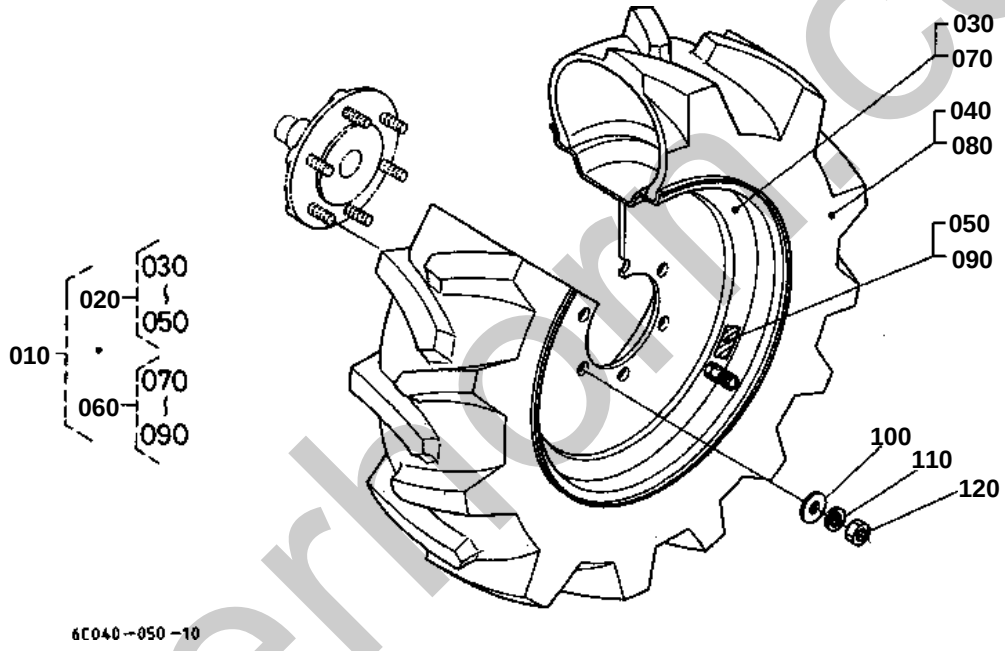

silverhorn.co.uk

FRONT WHEEL (6-12) [EXCEPT[AU]]

↔ Interchangeable; ≠ not interchangeable; ← new for old; → old for new

REF.No	Part No.	Description	Q'ty	S.No.	I/C	REMARKS	Weight (kgf)	Weight (lb)
010	6C040-50210	ASSY TIRE FRONT	1				0	0
020	6C040-50220	ASSY TIRE LH	1				0	0
030	6C040-50240	WHEEL	1				0	0
040	66434-57140	TIRE	1				0	0
050	6C040-50250	LABEL TIRE LH	1				0	0
060	6C040-50230	ASSY TIRE RH	1				0	0
070	6C040-50240	WHEEL	1				0	0
080	66434-57140	TIRE	1				0	0
090	6C040-50260	LABEL TIRE RH	1				0	0
100	04013-60120	WASHER PLAIN	12				0.01	0.022
110	04512-60120	WASHER SPRING	12				0.005	0.011
120	02176-50120	NUT	12				0.01	0.022

silverhorn.co.uk

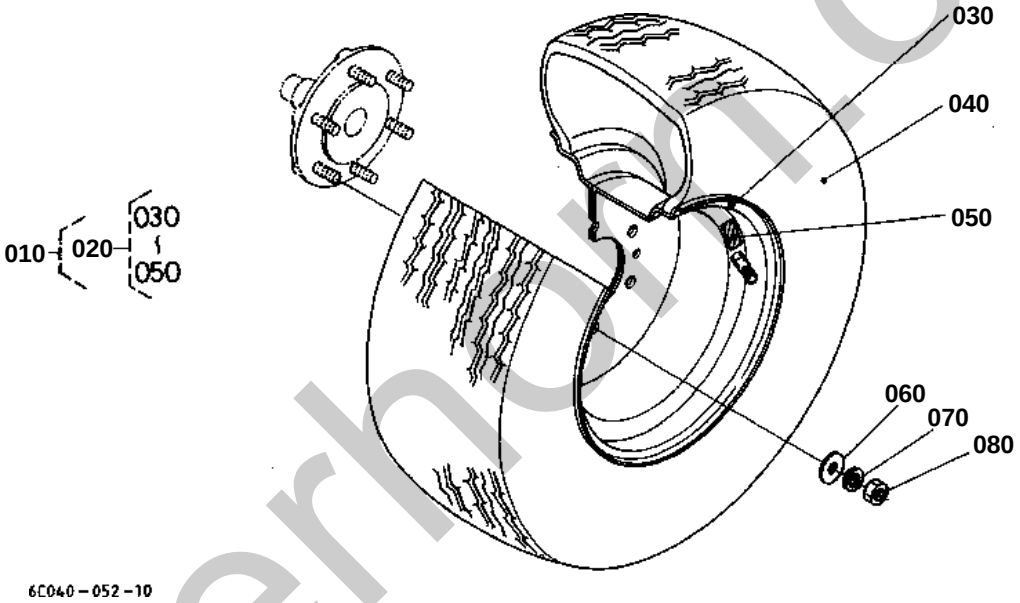

silverhart.co.uk

FRONT WHEEL (21X8.00-10) [EXCEPT[AU]]

↔ Interchangeable; ≠ not interchangeable; ← new for old; → old for new

REF.No	Part No.	Description	Q'ty	S.No.	I/C	REMARKS	Weight (kgf)	Weight (lb)
010	6C040-50510	ASSY TIRE FRONT	1				0	0
020	6C040-50520	ASSY TIRE	2				0	0
030	6C040-50530	WHEEL	2				0	0
040	67404-57130	TIRE	2				0	0
050	6C040-50540	LABEL TIRE	2				0	0
060	04013-60120	WASHER PLAIN	12				0.01	0.022
070	04512-60120	WASHER SPRING	12				0.005	0.011
080	02176-50120	NUT	12				0.01	0.022

silverhorn.co.uk

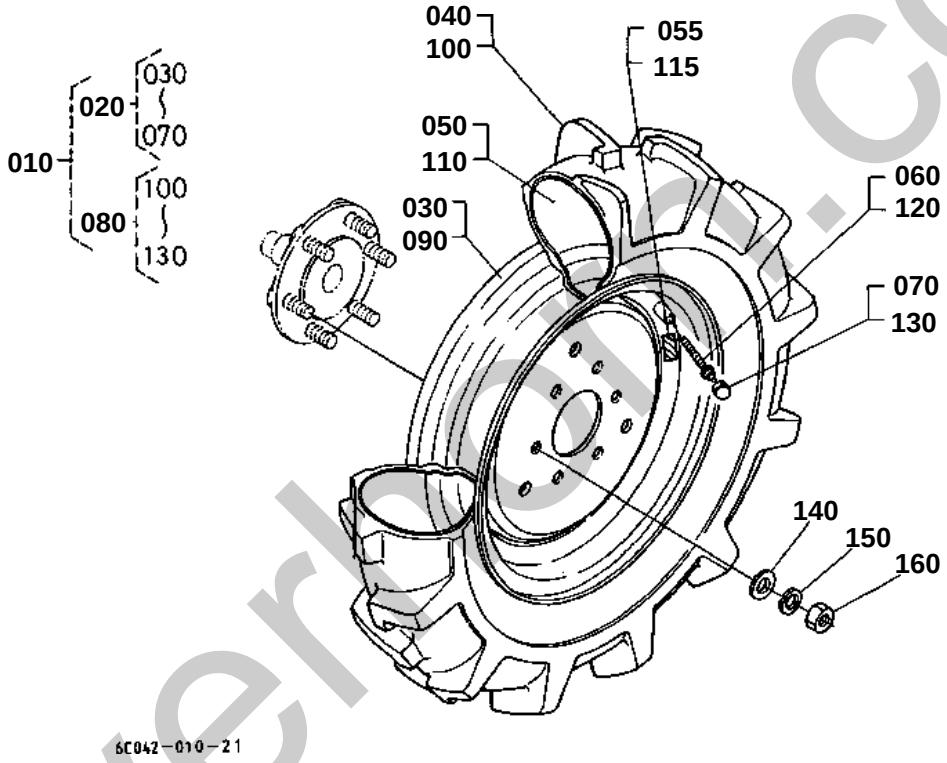

silverhill.co.uk

FRONT WHEEL (6-12B) [AU]

↔ Interchangeable; ≠ not interchangeable; ← new for old; → old for new

REF.No	Part No.	Description	Q'ty	S.No.	I/C	REMARKS	Weight (kgf)	Weight (lb)
010	6C042-50010	ASSY TIRE FRONT	1				0	0
020	6C042-50020	ASSY TIRE LH	1				0	0
030	37500-57920	WHEEL	1				5.8	12.76
040	96015-34130	TIRE	1				7.2	15.84
050	93016-01120	TUBE	1				0.7	1.54
055	6C090-57430	LABEL TIRE LH	1				0.001	0.0022
060	32150-27740	CORE VALVE	1				0.003	0.0066
070	38240-11690	CAP VALVE	1				0.001	0.0022
080	6C042-50030	ASSY TIRE RH	1				0	0
090	37500-57920	WHEEL	1				5.8	12.76
100	96015-34130	TIRE	1				7.2	15.84
110	93016-01120	TUBE	1				0.7	1.54
115	6C090-57450	LABEL TIRE RH	1				0.001	0.0022
120	32150-27740	CORE VALVE	1				0.003	0.0066
130	38240-11690	CAP VALVE	1				0.001	0.0022
140	04013-60120	WASHER PLAIN	12				0.01	0.022
150	04512-60120	WASHER SPRING	12				0.005	0.011
160	02176-50120	NUT	12				0.01	0.022

silverhorn.co.uk

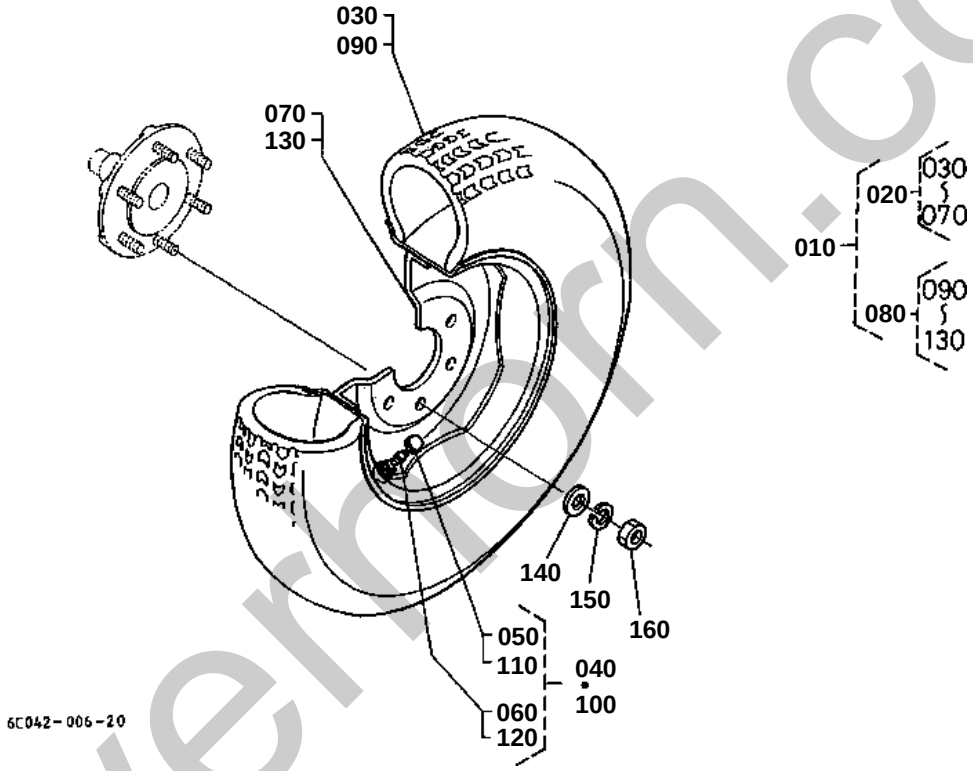

silverhorn.co.uk

FRONT WHEEL (22X8.50-12) [AU]

↔ Interchangeable; ≠ not interchangeable; ← new for old; → old for new

REF.No	Part No.	Description	Q'ty	S.No.	I/C	REMARKS	Weight (kgf)	Weight (lb)
010	6C042-50510	ASSY TIRE	1				3	6.6
020	6C042-50520	ASSY TIRE FRONT	1				0	0
030	67950-59430	TIRE	1				7.4	16.28
040	34159-11850	VALVE TIRE	1				0.013	0.0286
050	38240-11690	CAP VALVE	1				0.001	0.0022
060	32150-27740	CORE VALVE	1				0.003	0.0066
070	6C042-50340	WHEEL	1				7.2	15.84
080	6C042-50530	ASSY TIRE RH	1				0	0
090	67950-59430	TIRE	1				7.4	16.28
100	34159-11850	VALVE TIRE	1				0.013	0.0286
110	38240-11690	CAP VALVE	1				0.001	0.0022
120	32150-27740	CORE VALVE	1				0.003	0.0066
130	6C042-50340	WHEEL	1				7.2	15.84
140	04013-60120	WASHER PLAIN	12				0.01	0.022
150	04512-60120	WASHER SPRING	12				0.005	0.011
160	02176-50120	NUT	12				0.01	0.022

silverhorn.co.uk

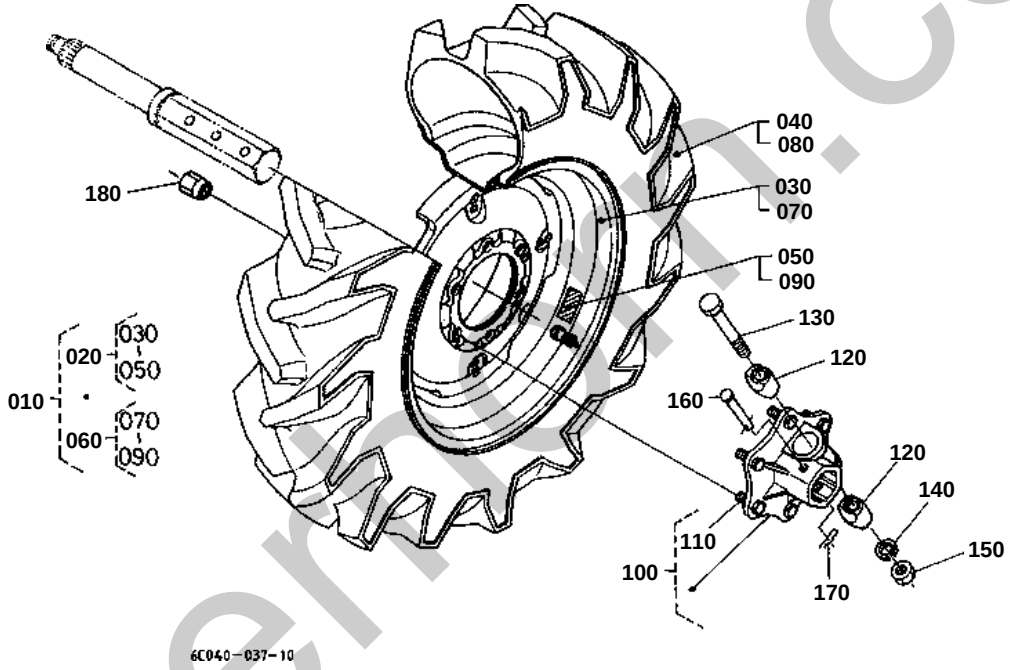

silvermoon.co.uk

REAR WHEEL (8.3-16) [EXCEPT[AU]]

↔ Interchangeable; ≠ not interchangeable; ← new for old; → old for new

REF.No	Part No.	Description	Q'ty	S.No.	I/C	REMARKS	Weight (kgf)	Weight (lb)
010	66434-17610	ASSY TIRE	1				0	0
020	66434-17620	ASSY TIRE LH	1				0	0
030	66434-17640	WHEEL	1				0	0
040	66434-17650	TIRE	1				0	0
050	66434-17660	LABEL TIRE LH	1				0	0
060	66434-17630	ASSY TIRE RH	1				0	0
070	66434-17640	WHEEL	1				0	0
080	66434-17650	TIRE	1				0	0
090	66434-17670	LABEL TIRE RH	1				0	0
100	6C040-17410	ASSY HUB WHEEL	2				2.35	5.17
110	66704-17313	BOLT	12				0.049	0.1078
120	6C040-17460	COTTER	4				0.17	0.374
130	01173-61600	BOLT	2				0.165	0.363
140	04512-60160	WASHER SPRING	2				0.01	0.022
150	02174-50160	NUT	2				0.022	0.0484
160	63733-17270	PIN WHEEL TUBE	2				0.05	0.11
170	62131-17290	PIN	2				0.004	0.0088
180	35340-11390	NUT	12				0.03	0.066

silverhorn.co.uk

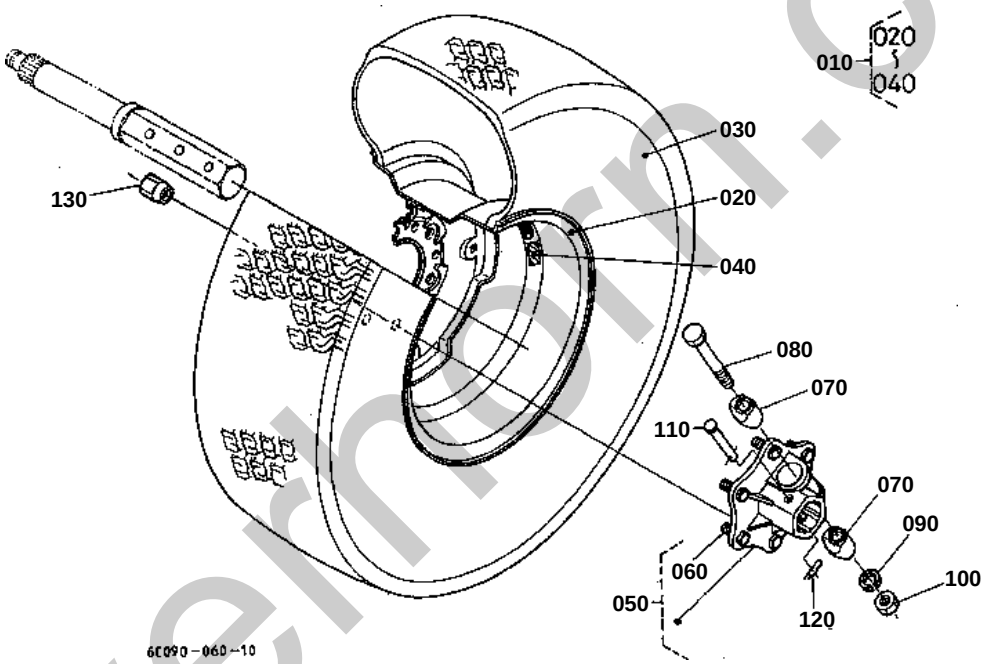

silvermorn.co.uk

REAR WHEEL (29X12.5-15) [EXCEPT[AU]]

↔ Interchangeable; ≠ not interchangeable; ← new for old; → old for new

REF.No	Part No.	Description	Q'ty	S.No.	I/C	REMARKS	Weight (kgf)	Weight (lb)
010	66424-17610	ASSY TIRE	2				0	0
020	66424-17620	WHEEL	2				0	0
030	35080-11530	TIRE	2				0	0
040	66424-17640	LABEL	2				0	0
050	6C040-17410	ASSY HUB WHEEL	2				2.35	5.17
060	66704-17313	BOLT	12				0.049	0.1078
070	6C040-17460	COTTER	4				0.17	0.374
080	01173-61600	BOLT	2				0.165	0.363
090	04512-60160	WASHER SPRING	2				0.01	0.022
100	02174-50160	NUT	2				0.022	0.0484
110	63733-17270	PIN WHEEL TUBE	2				0.05	0.11
120	62131-17290	PIN	2				0.004	0.0088
130	35340-11390	NUT	12				0.03	0.066

silverhorn.co.uk

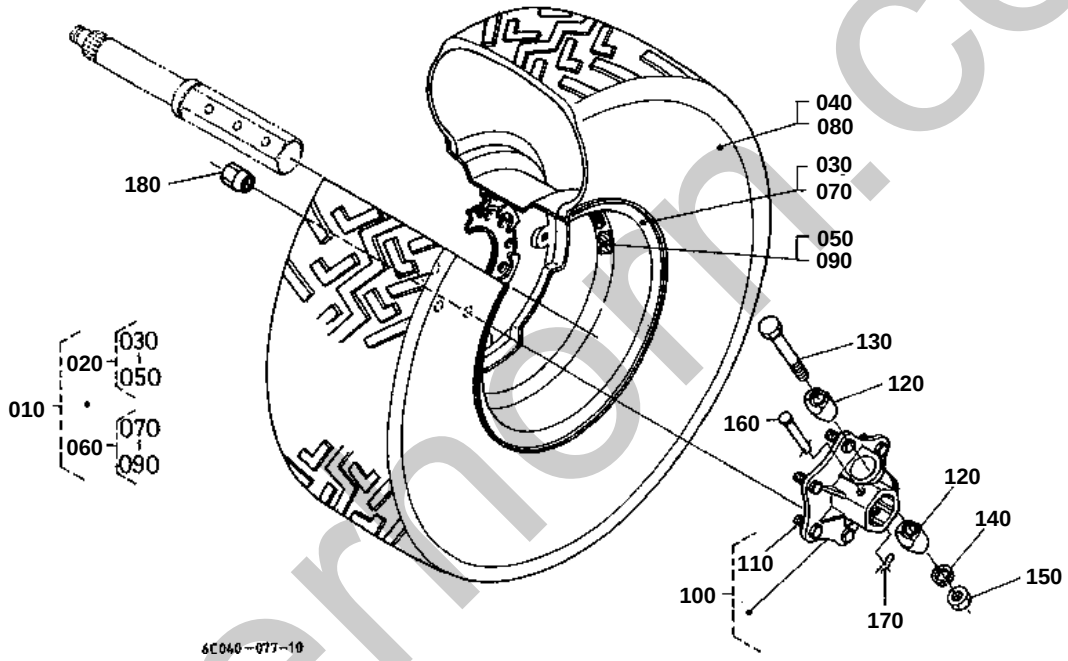

silvermm.co.uk

REAR WHEEL (31X15.5-15) [EXCEPT[AU]]

↔ Interchangeable; ≠ not interchangeable; ← new for old; → old for new

REF.No	Part No.	Description	Q'ty	S.No.	I/C	REMARKS	Weight (kgf)	Weight (lb)
010	66437-17610	ASSY TIRE	1				0	0
020	66437-17620	ASSY TIRE LH	1				0	0
030	35080-11540	WHEEL	1				0	0
040	66437-17630	TIRE	1				0	0
050	66437-17660	LABEL TIRE LH	1				0	0
060	66437-17650	ASSY TIRE RH	1				0	0
070	35080-11540	WHEEL	1				0	0
080	66437-17630	TIRE	1				0	0
090	66437-17670	LABEL TIRE RH	1				0	0
100	6C040-17410	ASSY HUB WHEEL	2				2.35	5.17
110	66704-17313	BOLT	12				0.049	0.1078
120	6C040-17460	COTTER	4				0.17	0.374
130	01173-61600	BOLT	2				0.165	0.363
140	04512-60160	WASHER SPRING	2				0.01	0.022
150	02174-50160	NUT	2				0.022	0.0484
160	63733-17270	PIN WHEEL TUBE	2				0.05	0.11
170	62131-17290	PIN	2				0.004	0.0088
180	35340-11390	NUT	12				0.03	0.066

silverhorn.co.uk

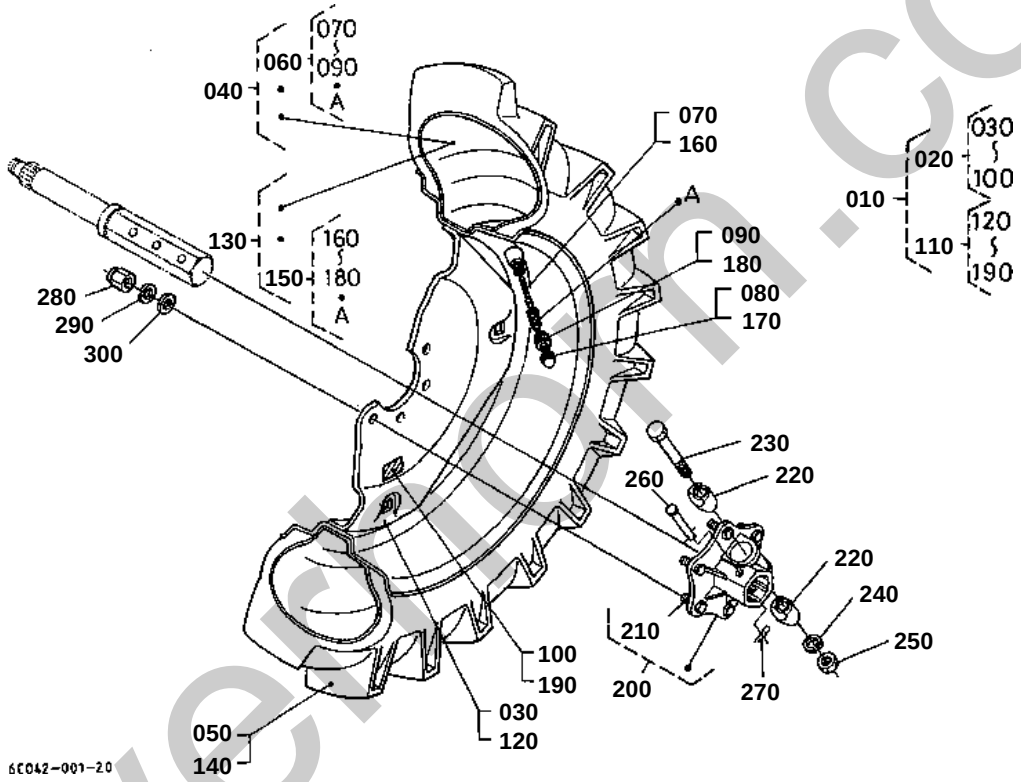

silverton.co.uk

↔ Interchangeable; ≠ not interchangeable; ← new for old; → old for new

REF.No	Part No.	Description	Q'ty	S.No.	I/C	REMARKS	Weight (kgf)	Weight (lb)
010	66415-17500	ASSY REAR WHEEL	1				55	121
020	66415-17510	ASSY REAR WHEEL LH	1				0	0
030	66414-17520	WHEEL	1				11	24.2
040	96018-05120	TUBE	1				1.6	3.52
050	96018-05130	TIRE	1				15.4	33.88
060	32150-27700	HOUSING VALVE CORE	1				0.001	0.0022
070	32270-11680	CORE VALVE	1				0.02	0.044
080	38240-11690	CAP VALVE	1				0.001	0.0022
090	32270-27710	NUT RIM	1				0.006	0.0132
100	66415-17532	LABEL LH	1				0	0
110	66415-17540	ASSY REAR WHEEL RH	1				0	0
120	66414-17520	WHEEL	1				11	24.2
130	96018-05120	TUBE	1				1.6	3.52
140	96018-05130	TIRE	1				15.4	33.88
150	32150-27700	HOUSING VALVE CORE	1				0.001	0.0022
160	32270-11680	CORE VALVE	1				0.02	0.044
170	38240-11690	CAP VALVE	1				0.001	0.0022
180	32270-27710	NUT RIM	1				0.006	0.0132
190	66415-17552	LABEL RH	1				0	0
200	6C040-17410	ASSY HUB WHEEL	2				2.35	5.17
210	66704-17313	BOLT	12				0.049	0.1078
220	6C040-17460	COTTER	4				0.17	0.374
230	01173-61600	BOLT	2				0.165	0.363
240	04512-60160	WASHER SPRING	2				0.01	0.022
250	02174-50160	NUT	2				0.022	0.0484
260	63733-17270	PIN WHEEL TUBE	2				0.05	0.11
270	62131-17290	PIN	2				0.004	0.0088
280	35340-11390	NUT	12				0.03	0.066
290	04512-60140	WASHER SPRING	12				0.006	0.0132
300	04013-60140	WASHER PLAIN	12				0.01	0.022

silverhorn.co.uk

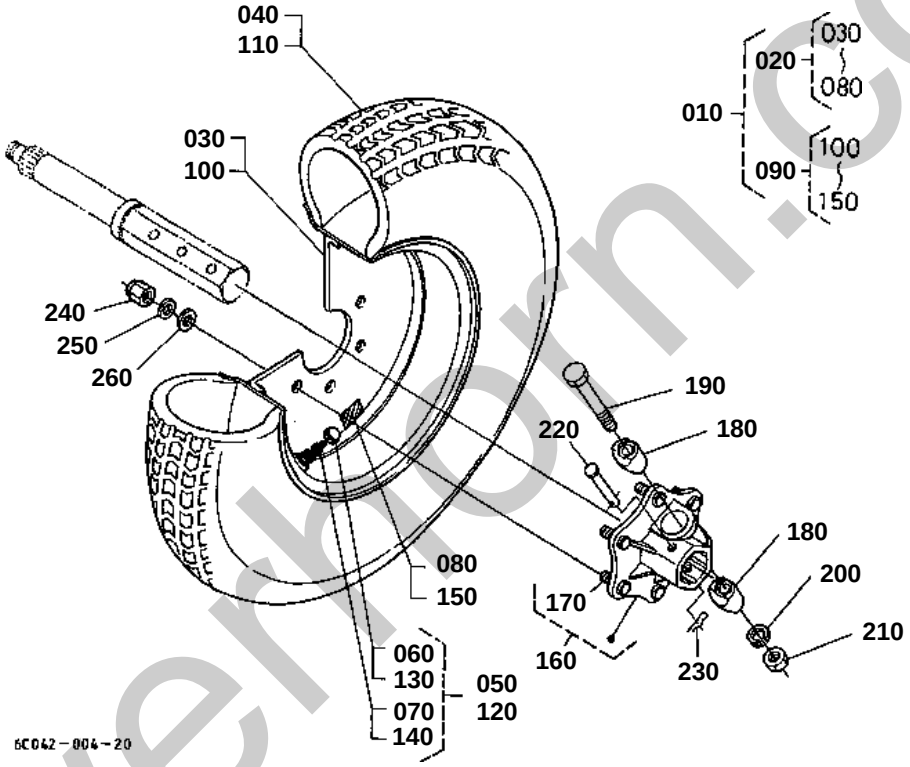

silverhorn.co.uk

REAR WHEEL (31X13.5-15) [AU]

↔ Interchangeable; ≠ not interchangeable; ← new for old; → old for new

REF.No	Part No.	Description	Q'ty	S.No.	I/C	REMARKS	Weight (kgf)	Weight (lb)
010	66426-17700	ASSY REAR WHEEL	1				62	136.4
020	67405-17720	ASSY REAR WHEEL LH	1				0	0
030	66416-17720	WHEEL	1				13.5	29.7
040	96016-64130	TIRE	1				20	44
050	34159-11850	VALVE TIRE	1				0.013	0.0286
060	38240-11690	CAP VALVE	1				0.001	0.0022
070	32150-27740	CORE VALVE	1				0.003	0.0066
080	96016-64160	LABEL LH	1				0	0
090	67405-17750	ASSY REAR WHEEL RH	1				0	0
100	66416-17720	WHEEL	1				13.5	29.7
110	96016-64130	TIRE	1				20	44
120	34159-11850	VALVE TIRE	1				0.013	0.0286
130	38240-11690	CAP VALVE	1				0.001	0.0022
140	32150-27740	CORE VALVE	1				0.003	0.0066
150	96016-64170	LABEL RH	1				0	0
160	6C040-17410	ASSY HUB WHEEL	2				2.35	5.17
170	66704-17313	BOLT	12				0.049	0.1078
180	6C040-17460	COTTER	4				0.17	0.374
190	01173-61600	BOLT	2				0.165	0.363
200	04512-60160	WASHER SPRING	2				0.01	0.022
210	02174-50160	NUT	2				0.022	0.0484
220	63733-17270	PIN WHEEL TUBE	2				0.05	0.11
230	62131-17290	PIN	2				0.004	0.0088
240	35340-11390	NUT	12				0.03	0.066
250	04512-60140	WASHER SPRING	12				0.006	0.0132
260	04013-60140	WASHER PLAIN	12				0.01	0.022

silverhorn.co.uk

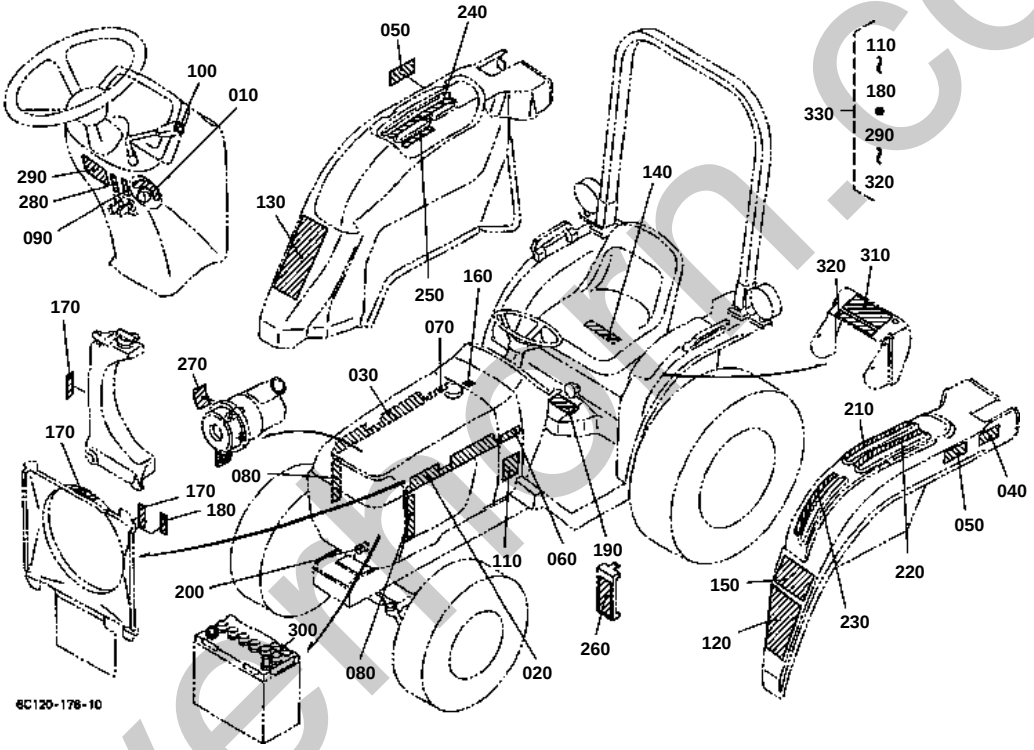

silvermtn.co.uk

LABEL [HST TYPE] [A]

↔ Interchangeable; ≠ not interchangeable; ← new for old; → old for new

REF.No	Part No.	Description	Q'ty	S.No.	I/C	REMARKS	Weight (kgf)	Weight (lb)
010	6C120-47210	MARK MAIN SWITCH	1				0	0
020	6C110-47270	MARK MODEL LH	1				0.016	0.0352
030	6C110-47280	MARK MODEL RH	1				0.016	0.0352
040	6C040-47530	MARK 4WD	1				0.001	0.0022
050	6C050-47550	MARK HST	2				0.001	0.0022
060	6C070-47250	MARK PILLAR LH	1				0.001	0.0022
070	6C070-47260	MARK PILLAR RH	1				0.001	0.0022
080	6A325-47380	MARK SKIRT	2				0.003	0.0066
090	6C040-47510	LABEL PARKING	1				0.001	0.0022
100	TA040-49370	MARK ACCEL.GRIP	1				0.001	0.0022
110	6C090-49650	LABEL START CAUTION	1				0.005	0.011
120	6C070-47420	LABEL SAFETY	1				0.005	0.011
130	TA040-49320	LABEL ROPS WARNING	1				0.001	0.0022
140	6C120-47460	LABEL PTO	1				0.001	0.0022
150	6C120-47450	LABEL PTO	1				0.001	0.0022
160	6C040-47412	LABEL FILLER CAUTION	1				0.001	0.0022
170	6C090-49580	LABEL FAN WARNING	3				0.005	0.011
180	6C090-49590	LABEL MUFFLER	1				0.005	0.011
190	6C050-47480	LABEL PEDAL	1				0.002	0.0044
200	-----	NAME PLATE	1			NON SALE	0	0
210	6C120-47300	LABEL MID PTO	1				0.001	0.0022
220	6C120-47320	LABEL PTO	1				0.001	0.0022
230	6C130-47330	LABEL RANGE SHIFT	1				0.001	0.0022
240	6C120-47350	LABEL HYDRAULIC	1				0.002	0.0044
250	6C040-47362	LABEL 4WD	1				0.001	0.0022
260	6C090-47490	LABEL FUSE BOX	1				0.001	0.0022
270	32721-58282	LABEL CAUTION	1				0.001	0.0022
280	6C050-47310	LABEL HST	1				0.001	0.0022
290	6C150-47430	LABEL PARKING	1				0.002	0.0044
300	6C040-55590	LABEL BATTERY	1				0.001	0.0022
310	TA040-49590	LABEL PTO WARNING	1				0.002	0.0044
320	6C140-47440	LABEL DRAWBAR	1				0.001	0.0022
330	6C120-47400	KIT LABEL SAFETY	1				0.06	0.132

silvermorn.co.uk

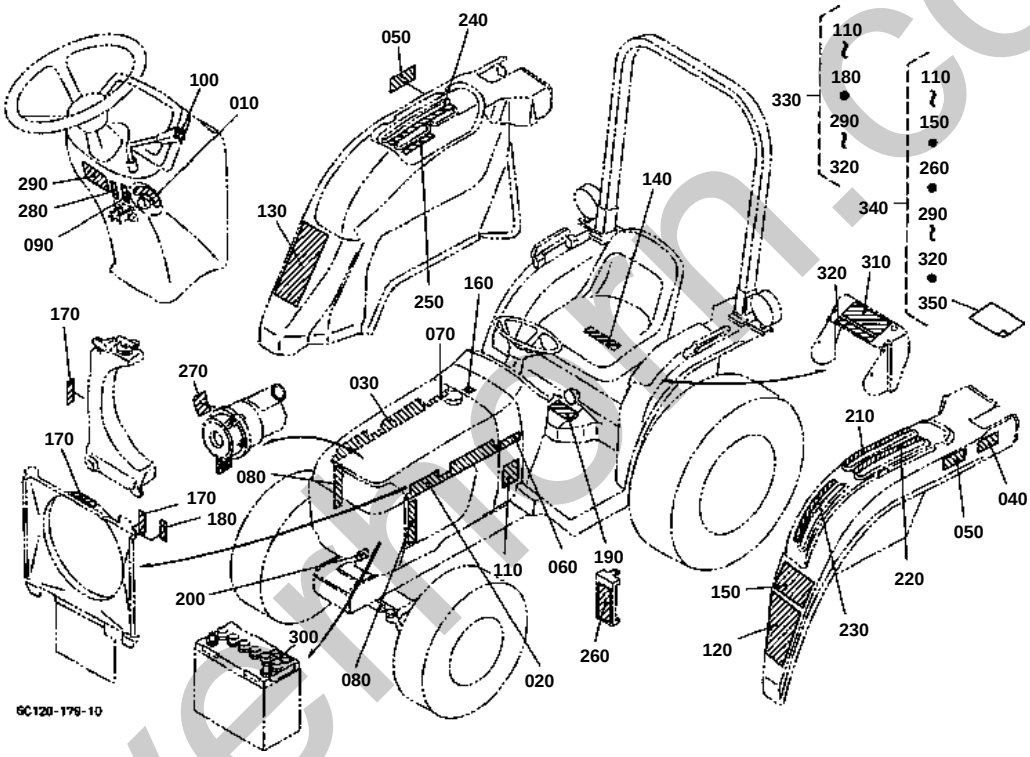

silvermachin.co.uk

LABEL [HST TYPE] [CA]

↔ Interchangeable; ≠ not interchangeable; ← new for old; → old for new

REF.No	Part No.	Description	Q'ty	S.No.	I/C	REMARKS	Weight (kgf)	Weight (lb)
010	6C120-47210	MARK MAIN SWITCH	1				0	0
020	6C110-47270	MARK MODEL LH	1				0.016	0.0352
030	6C110-47280	MARK MODEL RH	1				0.016	0.0352
040	6C040-47530	MARK 4WD	1				0.001	0.0022
050	6C050-47550	MARK HST	2				0.001	0.0022
060	6C070-47250	MARK PILLAR LH	1				0.001	0.0022
070	6C070-47260	MARK PILLAR RH	1				0.001	0.0022
080	6A325-47380	MARK SKIRT	2				0.003	0.0066
090	6C040-47510	LABEL PARKING	1				0.001	0.0022
100	TA040-49370	MARK ACCEL.GRIP	1				0.001	0.0022
110	6C090-49650	LABEL START CAUTION	1			ENGLISH	0.005	0.011
110	6C091-49650	LABEL START CAUTION	1			FRENCH	0.01	0.022
120	6C070-47420	LABEL SAFETY	1			ENGLISH	0.005	0.011
120	6C071-47420	LABEL SAFETY	1			FRENCH	0.001	0.0022
130	TA040-49320	LABEL ROPS WARNING	1			ENGLISH	0.001	0.0022
130	TA040-49150	LABEL ROPS WARNING	1			FRENCH	0.003	0.0066
140	6C120-47460	LABEL PTO	1			ENGLISH	0.001	0.0022
140	6C121-47460	LABEL PTO	1			FRENCH	0	0
150	6C120-47450	LABEL PTO	1			ENGLISH	0.001	0.0022
150	6C121-47450	LABEL PTO	1			FRENCH	0	0
160	6C040-47412	LABEL FILLER CAUTION	1				0.001	0.0022
170	6C090-49580	LABEL FAN WARNING	3				0.005	0.011
180	6C090-49590	LABEL MUFFLER	1				0.005	0.011
190	6C050-47480	LABEL PEDAL	1				0.002	0.0044
200	-----	NAME PLATE	1			NON SALE	0	0
210	6C120-47300	LABEL MID PTO	1				0.001	0.0022
220	6C120-47320	LABEL PTO	1				0.001	0.0022
230	6C130-47330	LABEL RANGE SHIFT	1				0.001	0.0022
240	6C120-47350	LABEL HYDRAULIC	1				0.002	0.0044
250	6C040-47362	LABEL 4WD	1				0.001	0.0022
260	6C090-47490	LABEL FUSE BOX	1			ENGLISH	0.001	0.0022
260	6C091-47490	LABEL FUSE	1			FRENCH	0.001	0.0022
270	32721-58282	LABEL CAUTION	1				0.001	0.0022
280	6C050-47310	LABEL HST	1				0.001	0.0022
290	6C150-47430	LABEL PARKING	1			ENGLISH	0.002	0.0044
290	6C151-47430	LABEL PARKING WARNIN	1			FRENCH	0	0
300	6C040-55590	LABEL BATTERY	1			ENGLISH	0.001	0.0022
300	6C021-92120	LABEL BATTERY	1			FRENCH	0.001	0.0022
310	TA040-49590	LABEL PTO WARNING	1			ENGLISH	0.002	0.0044
310	TA041-49590	LABEL PTO WARNING	1			FRENCH	0.005	0.011
320	6C140-47440	LABEL DRAWBAR	1			FRENCH	0.001	0.0022
320	6C141-47440	LABEL DRAWBAR	1			FRENCH	0.001	0.0022
330	6C120-47400	KIT LABEL SAFETY	1			ENGLISH	0.06	0.132
340	6C121-92100	KIT LABEL	1			FRENCH	0	0
350	6C121-92050	MANUAL INSTRUCTION	1			FRENCH	0	0

silvernorn.co.uk

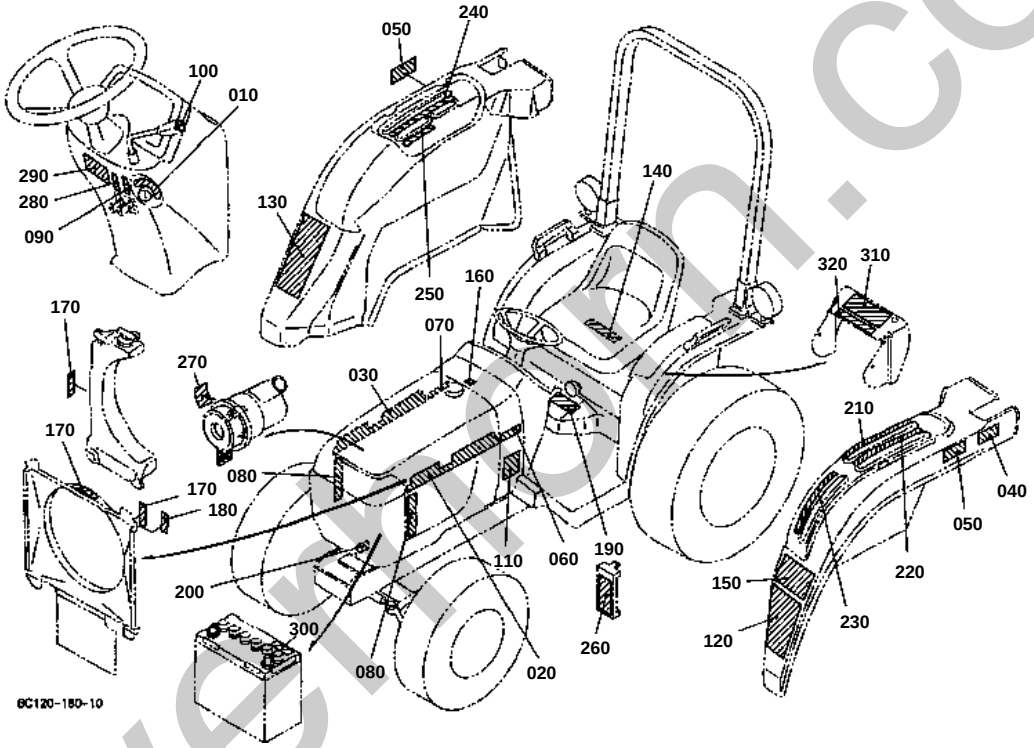

silvermtn.co.uk

LABEL [HST TYPE] [AU]

↔ Interchangeable; ≠ not interchangeable; ← new for old; → old for new

REF.No	Part No.	Description	Q'ty	S.No.	I/C	REMARKS	Weight (kgf)	Weight (lb)
010	6C120-47210	MARK MAIN SWITCH	1				0	0
020	6C110-47270	MARK MODEL LH	1				0.016	0.0352
030	6C110-47280	MARK MODEL RH	1				0.016	0.0352
040	6C040-47530	MARK 4WD	1				0.001	0.0022
050	6C050-47550	MARK HST	2				0.001	0.0022
060	6C070-47250	MARK PILLAR LH	1				0.001	0.0022
070	6C070-47260	MARK PILLAR RH	1				0.001	0.0022
080	6A325-47380	MARK SKIRT	2				0.003	0.0066
090	6C040-47510	LABEL PARKING	1				0.001	0.0022
100	TA040-49370	MARK ACCEL.GRIP	1				0.001	0.0022
110	6C090-49650	LABEL START CAUTION	1				0.005	0.011
120	6C070-47420	LABEL SAFETY	1				0.005	0.011
130	TA040-49320	LABEL ROPS WARNING	1				0.001	0.0022
140	6C120-47460	LABEL PTO	1				0.001	0.0022
150	6C120-47450	LABEL PTO	1				0.001	0.0022
160	6C040-47412	LABEL FILLER CAUTION	1				0.001	0.0022
170	6C090-49580	LABEL FAN WARNING	3				0.005	0.011
180	6C090-49590	LABEL MUFFLER	1				0.005	0.011
190	6C050-47480	LABEL PEDAL	1				0.002	0.0044
200	-----	NAME PLATE	1			NON SALE	0	0
210	6C120-47300	LABEL MID PTO	1				0.001	0.0022
220	6C120-47320	LABEL PTO	1				0.001	0.0022
230	6C130-47330	LABEL RANGE SHIFT	1				0.001	0.0022
240	6C120-47350	LABEL HYDRAULIC	1				0.002	0.0044
250	6C040-47362	LABEL 4WD	1				0.001	0.0022
260	6C090-47490	LABEL FUSE BOX	1				0.001	0.0022
270	32721-58282	LABEL CAUTION	1				0.001	0.0022
280	6C050-47310	LABEL HST	1				0.001	0.0022
290	6C150-47430	LABEL PARKING	1				0.002	0.0044
300	6C040-55590	LABEL BATTERY	1				0.001	0.0022
310	TA040-49590	LABEL PTO WARNING	1				0.002	0.0044
320	6C140-47440	LABEL DRAWBAR	1				0.001	0.0022

silverthorn.co.uk

↔ Interchangeable; ≠ not interchangeable; ← new for old; → old for new

REF.No	Part No.	Description	Q'ty	S.No.	I/C	REMARKS	Weight (kgf)	Weight (lb)
010	6C120-63112	MANUAL INSTRUCTION	1			ENGLISH	0	0
010	6C121-92050	MANUAL INSTRUCTION	1			FRENCH	0	0
020	6C140-62980	MANUAL ASSEMBLY	1			[EXCEPT[AU]]	0.034	0.0748
020	6C120-62980	MANUAL ASSEMBLY	1			[AU]	0	0
030	15241-86612	WRENCH FILTER	1				0.115	0.253
040	1G111-65720	FUSE	1			30A	0.009	0.0198
050	67401-62930	ASSY SPACER CLUTCH	1				0.03	0.066
060	67211-62940	PIECE DISTANCE	1				0.08	0.176
070	67401-62950	LABEL CLUTCH SPACER	1				0.002	0.0044
080	66416-62920	ASSY BAG SPARE FUSE	1				0.01	0.022
090	66416-62930	FUSE AUTO	2			15A	0.01	0.022
100	04013-60120	WASHER PLAIN	12			FOR FRONT WHEEL	0.01	0.022
110	04512-60120	WASHER SPRING	12			FOR FRONT WHEEL	0.005	0.011
120	02176-50120	NUT	12			FOR FRONT WHEEL	0.01	0.022
130	35340-11390	NUT	12			FOR REAR WHEEL	0.03	0.066
140	04512-60140	WASHER SPRING	12			FOR REAR WHEEL [AU]	0.006	0.0132
150	04013-60140	WASHER PLAIN	12			FOR REAR WHEEL [AU]	0.01	0.022

silverhorn.co.uk

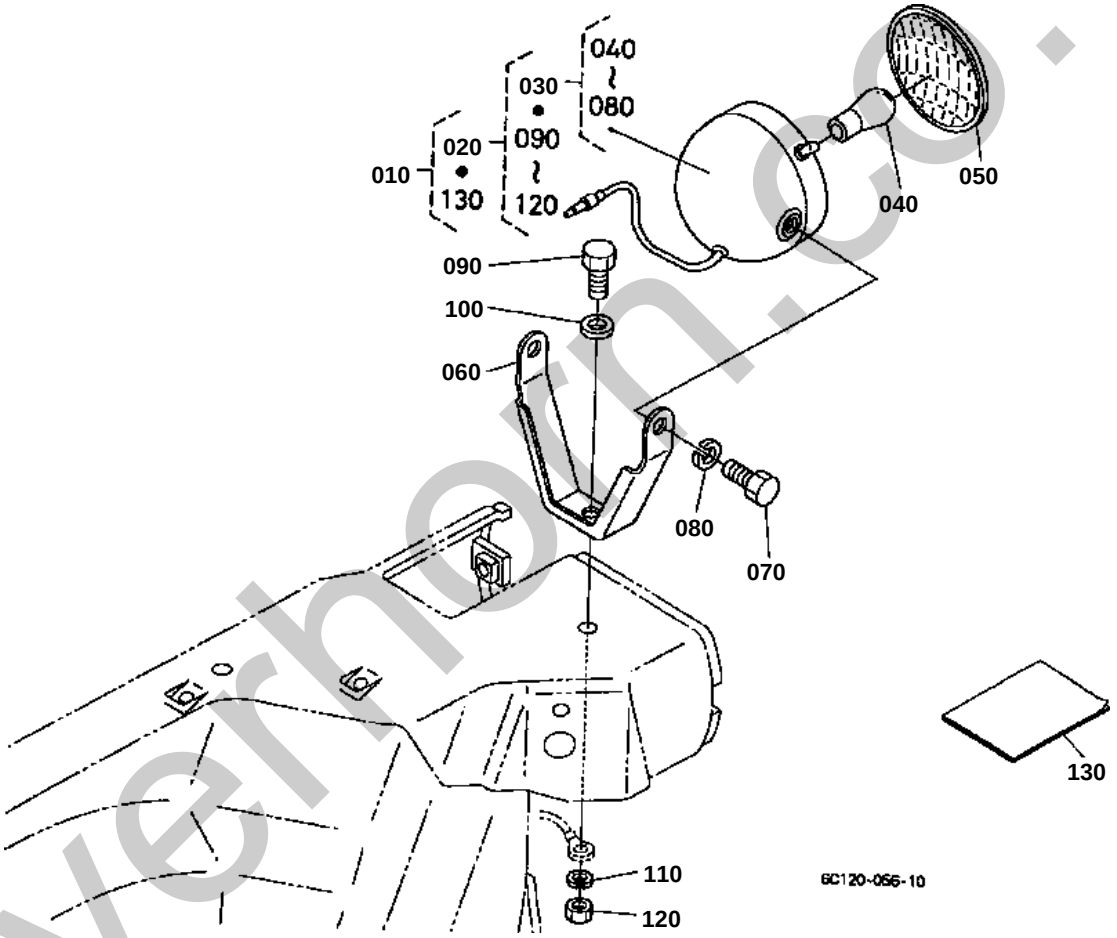

silverhorn.co.uk

WARKING LIGHT KIT [OPTION]

↔ Interchangeable; ≠ not interchangeable; ← new for old; → old for new

REF.No	Part No.	Description	Q'ty	S.No.	I/C	REMARKS	Weight (kgf)	Weight (lb)
010	6C040-95500	KIT LIGHT WORKING	1	<=50663			11.07	24.354
010	6C040-95502	KIT LIGHT WORKING	1	>=50664	←		0	0
020	35871-97600	ASSY LIGHT WORKING	1				0.88	1.936
030	35871-75900	ASSY LIGHT WORKING	1				0.85	1.87
040	68331-53360	BLUB	1			35W	0.015	0.033
050	68331-53310	LENS	1				0.15	0.33
060	35861-75910	STAY WORKING LAMP 4	1				0.25	0.55
070	01153-50820	BOLT	2				0.012	0.0264
080	04512-60080	WASHER SPRING	2				0.002	0.0044
090	01173-51020	BOLT	1				0.017	0.0374
100	04013-60100	WASHER PLAIN	1				0.004	0.0088
110	04512-60100	WASHER SPRING	1				0.002	0.0044
120	02118-50100	NUT	1				0.005	0.011
130	6C040-95510	MANUAL ASSEMBLY	1	<=50663			0.004	0.0088
130	6C040-95512	MANUAL ASSEMBLY	1	>=50664	←		0	0

silverhorn.co.uk

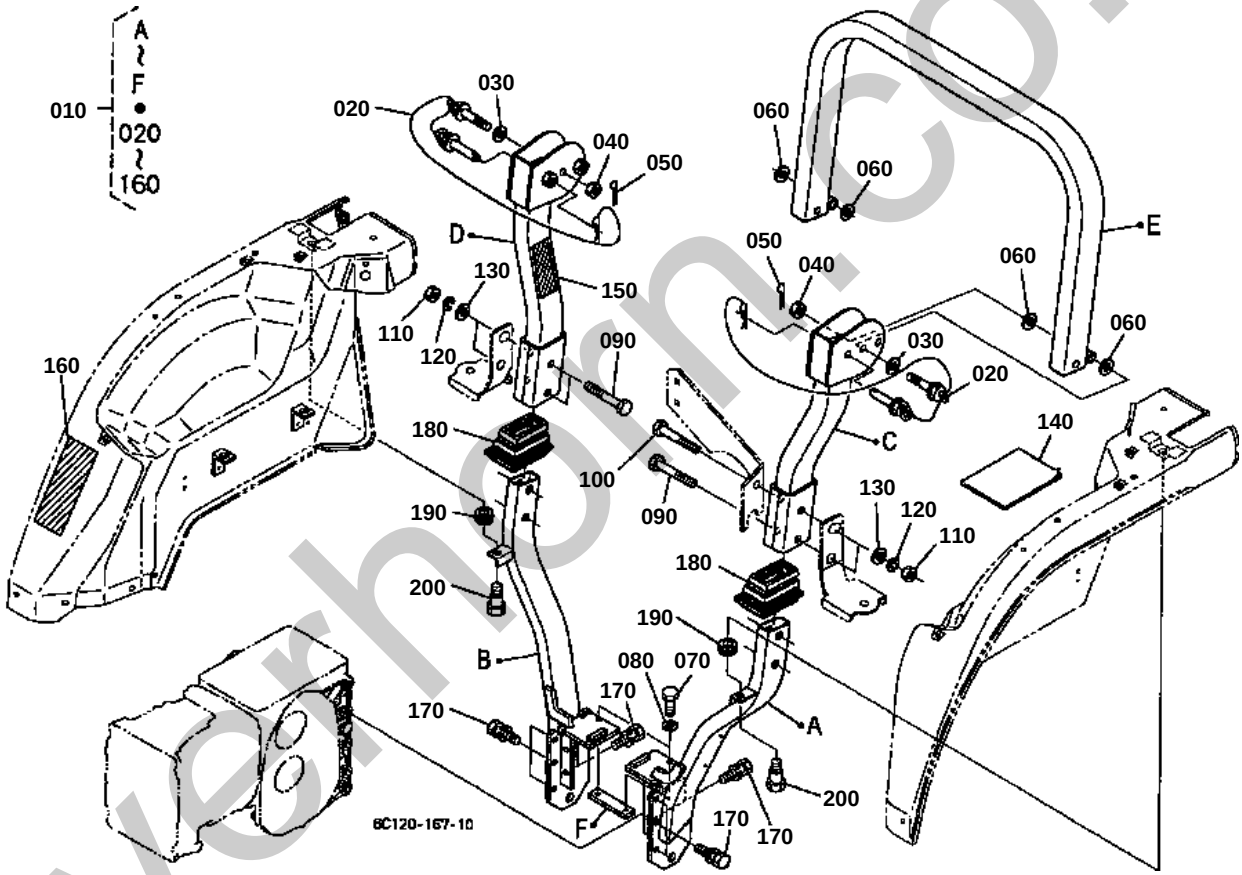

silverhorn.co.uk

ROPS KIT [OPTION]

↔ Interchangeable; ≠ not interchangeable; ← new for old; → old for new

REF.No	Part No.	Description	Q'ty	S.No.	I/C	REMARKS	Weight (kgf)	Weight (lb)
010	6C140-89102	ASSY ROPS	1				0	0
020	TA240-48464	ASSY BOLT SET	2				0	0
030	04013-60160	WASHER PLAIN	2				0.01	0.022
040	TA240-48362	NUT	2				0	0
050	75599-43194	PIN COTTER	2				0	0
060	75599-32017	WASHER PLAIN	4				0	0
070	75599-04320	BOLT HEXAGON	2				0.02	0.044
080	75599-33013	WASHER SPRING	2				0	0
090	75599-04665	HEX.BOLT	3				0	0
100	75599-04670	HEX.BOLT	1				0	0
110	75599-31066	HEX.NUT	4				0	0
120	75599-33016	WASHER SPRING	4				0.08	0.176
130	75599-32016	WASHER PLAIN	4				0.009	0.0198
140	6C140-89450	MANUAL INSTRUCTION	1				0	0
150	3A111-95540	LABEL ROPS CAUTION	1				0	0
160	TA240-98480	LABEL ROPS WARNING	1				0	0
170	01123-51235	BOLT	10				0.041	0.0902
180	6C040-72210	COVER ROPS	2				0.066	0.1452
190	6A100-51380	CUSHION	2				0.003	0.0066
200	6C040-51342	BOLT	2				0.017	0.0374

silverhorn.co.uk