FREQUENTLY USED ITEMS

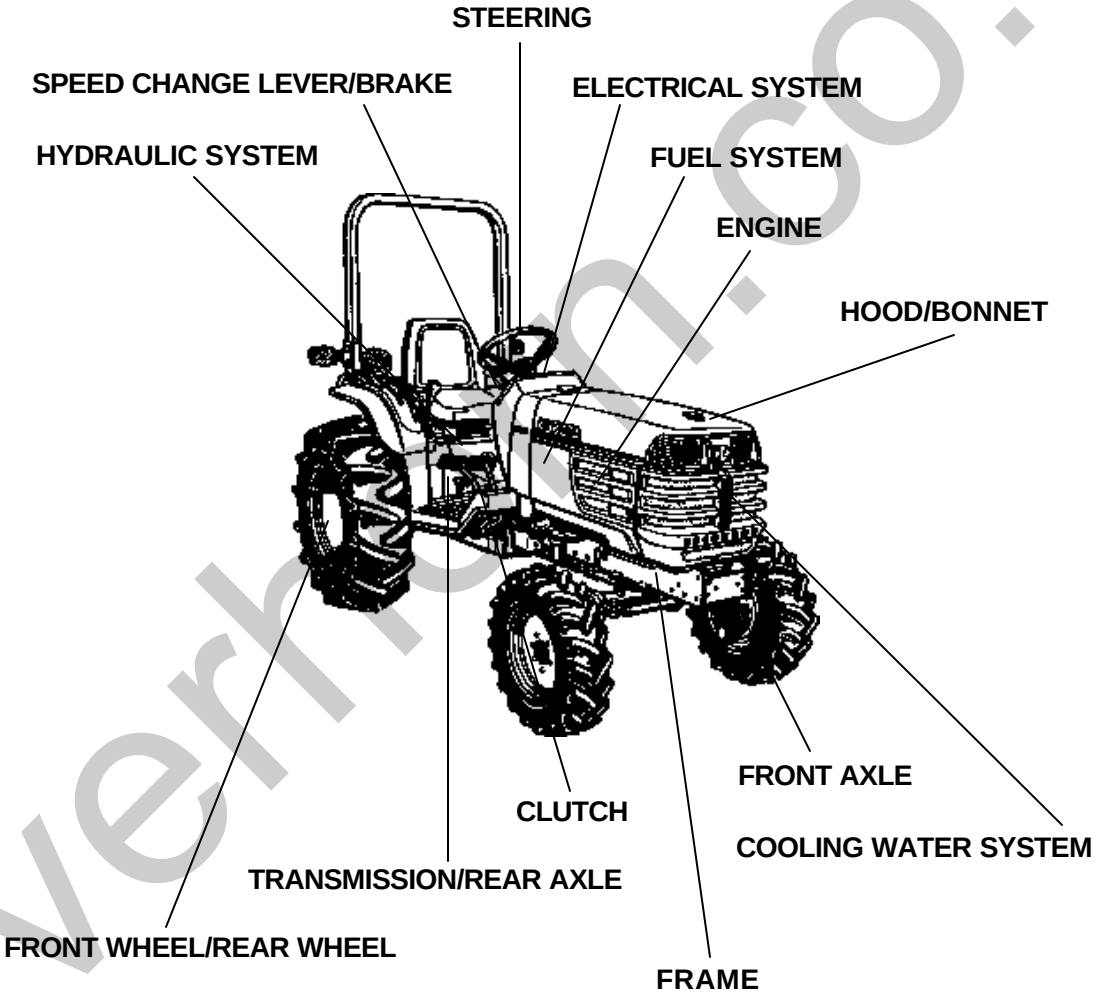

LABELS

OPTION

ACCESSORIES AND SERVICE PARTS

silverhorn.co.uk

Item	Part No.	Description	Book
FREQUENTLY USED ITEMS	000000	FREQUENTLY USED ITEMS	100K0716
ENGINE	01000101	CRANKCASE	100K0716
	01000102	CRANKCASE	100K0716
	010002	OIL PAN	100K0716
	010003	CYLINDER HEAD	100K0716
	010004	GEAR CASE	100K0716
	01000501	HEAD COVER	100K0716
	01000502	HEAD COVER	100K0716
	010006	OIL FILTER	100K0716
	010007	DIPSTICK AND GUIDE	100K0716
	010100	MAIN BEARING CASE	100K0716
	010101	CAMSHAFT AND IDLE GEAR SHAFT	100K0716
	010102	PISTON AND CRANKSHAFT	100K0716
	010103	FLYWHEEL	100K0716
	010105	FUEL CAMSHAFT AND GOVERNOR SHAFT	100K0716
	010200	IDLE APPARATUS	100K0716
	010202	INJECTION PUMP	100K0716
	01020401	GOVERNOR	100K0716
	01020402	GOVERNOR	100K0716
	010205	SPEED CONTROL PLATE	100K0716
	01020601	NOZZLE HOLDER AND GLOW PLUG	100K0716
	01020602	NOZZLE HOLDER AND GLOW PLUG	100K0716
	01020701	NOZZLE HOLDER [COMPONENT PARTS]	100K0716
	01020702	NOZZLE HOLDER [COMPONENT PARTS]	100K0716
	010301	FUEL PUMP(MECHANICAL)	100K0716
	010500	WATER FLANGE AND THERMOSTAT	100K0716
	010501	WATER PUMP	100K0716
	010600	VALVE AND ROCKER ARM	100K0716
	01060101	INLET MANIFOLD	100K0716
	01060102	INLET MANIFOLD	100K0716
	010602	EXHAUST MANIFOLD	100K0716
	010603	AIR CLEANER	100K0716
	010605	MUFFLER	100K0716
	010900	UPPER GASKET KIT	100K0716
	01090001	UPPER GASKET KIT	100K0716
	010901	LOWER GASKET KIT	100K0716
	01A001	ACCELERATOR LEVER	100K0716
FUEL SYSTEM	01A101	FUEL TANK	100K0716
	01A110	FUEL PIPE	100K0716
	01A130	FUEL FILTER [COMPONENT PARTS]	100K0716
COOLING WATER SYSTEM	01A401	FAN	100K0716
	01A410	WATER PIPE	100K0716
	01A420	RADIATOR	100K0716
	01A430	RESERVE TANK	100K0716
ELECTRICAL SYSTEM	01A510	STOP SOLENOID	100K0716
	01A521	DYNAMO	100K0716
	01A523	DYNAMO [COMPONENT PARTS]	100K0716
	01A525	STARTER	100K0716
	01A530	STARTER [COMPONENT PARTS]	100K0716
	01A535	BATTERY	100K0716
	01B10101	SWITCH [MID PTO TYPE]	100K0716
	01B10102	SWITCH [MID PTO TYPE]	100K0716

silverhorn.co.uk

Item	Part No.	Description	Book
ELECTRICAL SYSTEM	01B10103	SWITCH [EXCEPT MID PTO TYPE]	100K0716
	01B10104	SWITCH [EXCEPT MID PTO TYPE]	100K0716
	01B115	PANEL BOARD	100K0716
	01B120	PANEL BOARD [COMPONENT PARTS]	100K0716
	01B301	HEAD LIGHT	100K0716
	01B302	HAZARD LIGHT	100K0716
	01B304	TAIL LIGHT	100K0716
	01B310	WINKER LAMP	100K0716
	01B501	ELECTRICAL WIRING	100K0716
CLUTCH	01C101	CLUTCH	100K0716
	01C110	CLUTCH ROD	100K0716
	01C301	CLUTCH PEDAL	100K0716
	01C401	CLUTCH HOUSING	100K0716
FRAME	01C415	CENTER FRAME	100K0716
	01C417	SUB FRAME	100K0716
TRANSMISSION/REAR AXLE	01C420	TRANSMISSION CASE	100K0716
	01C425	DIFFERENTIAL GEAR CASE	100K0716
	01C427	REAR AXLE CASE	100K0716
	01D001	CLUTCH SHAFT	100K0716
	01D005	PROPELLER SHAFT	100K0716
	01D010	HST	100K0716
	01D01501	HST [COMPONENT PARTS]	100K0716
	01D01502	HST [COMPONENT PARTS]	100K0716
	01D01503	HST [COMPONENT PARTS]	100K0716
	01D103	FRONT SHAFT	100K0716
	01D135	PTO SHAFT	100K0716
	01D13701	MID PTO [MID PTO TYPE]	100K0716
	01D13702	MID PTO [EXCEPT MID PTO TYPE]	100K0716
	01D140	REAR DIFFERENTIAL	100K0716
	01D143	FRONT WHEEL PROPELLER SHAFT	100K0716
	01D149	2ND SHAFT	100K0716
	01D152	3RD SHAFT	100K0716
	01D155	4TH SHAFT	100K0716
	01D301	REAR AXLE	100K0716
SPEED CHANGE LEVER/BRAKE	01E001	BRAKE	100K0716
	01E005	BRAKE ROD	100K0716
	01E015	PARKING BRAKE LEVER	100K0716
	01F030	SPEED SET LEVER	100K0716
	01F107	NEUTRAL HOLDER LINK	100K0716
	01F108	SPEED CONTROL PEDAL	100K0716
	01F110	RANGE GEAR SHIFT LEVER	100K0716
	01F113	FRONT WHEEL DRIVE LEVER	100K0716
	01F12501	PTO GEAR SHIFT LEVER [MID PTO TYPE]	100K0716
	01F12502	PTO GEAR SHIFT LEVER [EXCEPT MID PTO TYPE]	100K0716
	01F143	HYDRAULIC CONTROL LEVER	100K0716
	01F201	BRAKE PEDAL	100K0716
	01F205	DIFFERENTIAL LOCK PEDAL	100K0716
FRONT AXLE	01G101	FRONT AXLE FRAME	100K0716
	01G105	FRONT AXLE CASE	100K0716
	01G115	FRONT DIFFERENTIAL	100K0716
	01G120	DIFFERENTIAL GEAR SHAFT	100K0716

silverhorn.co.uk

Item	Part No.	Description	Book
FRONT AXLE	01G123	BEVEL GEAR CASE	100K0716
	01G125	FRONT AXLE CASE	100K0716
	01G130	FRONT AXLE	100K0716
	01G135	FRONT DRIVE SHAFT	100K0716
STEERING	01H003	DRAG LINK	100K0716
	01H005	TIE ROD	100K0716
	01H101	STEERING HANDLE	100K0716
	01H105	STEERING POST	100K0716
HYDRAULIC SYSTEM	01J101	HYDRAULIC PUMP(PS)	100K0716
	01J105	HYDRAULIC PUMP(PS) [COMPONENT PARTS]	100K0716
	01J120	HYDRAULIC PUMP	100K0716
	01J125	HYDRAULIC PUMP [COMPONENT PARTS]	100K0716
	01J201	HYDRAULIC OIL LINE(SUCTION)	100K0716
	01J210	HYDRAULIC OIL LINE(DELIVERY)	100K0716
	01J215	HYDRAULIC OIL LINE(STEERING)	100K0716
	01J230	HYDRAULIC OIL LINE(T/M)	100K0716
	01J235	HYDRAULIC OIL LINE(HST)	100K0716
	01J240	HYDRAULIC OIL LINE(OIL COOLER)	100K0716
	01J245	HYDRAULIC OIL LINE(F/M)	100K0716
	01J301	HYDRAULIC CYLINDER	100K0716
	01J310	HYDRAULIC PISTON/LIFT ARM	100K0716
	01J330	FEED BACK LEVER	100K0716
	01J405	CONTROL VALVE	100K0716
	01J410	CONTROL VALVE [COMPONENT PARTS]	100K0716
	01K101	3-POINT LINKAGE 2(LIFT ROD)	100K0716
	01K115	LOWER LINK	100K0716
	01K120	3-POINT LINKAGE 1(TOP LINK)	100K0716
	01K125	CHECK CHAIN	100K0716
	01L117	HITCH/DRAWBAR	100K0716
	01L125	PTO PROTECTOR	100K0716
HOOD/BONNET	01M101	FRONT GRILLE	100K0716
	01M105	BONNET	100K0716
	01M113	PANEL COVER	100K0716
	01M120	SIDE COVER	100K0716
	01M130	SHUTTER PLATE	100K0716
	01M210	FENDER	100K0716
	01M215	FLOOR SEAT	100K0716
	01M21701	SEAT SUPPORT	100K0716
	01M21702	SEAT SUPPORT	100K0716
	01M225	STEP	100K0716
	01M30101	ROPS(RIGID TYPE)	100K0716
	01M30102	ROPS(FOLDABLE TYPE)	100K0716
	01M501	SMV EMBLEM	100K0716
FRONT WHEEL/REAR WHEEL	01R10101	FRONT WHEEL(7-12)	100K0716
	01R10102	FRONT WHEEL(23*8.50-12)	100K0716
	01R10103	FRONT WHEEL(23*8.50-14R4)	100K0716
	01R10104	FRONT WHEEL(24*8.50-14)	100K0716
	01R11001	REAR WHEEL(12.4-16)	100K0716
	01R11002	REAR WHEEL(13.6-16)	100K0716
	01R11003	REAR WHEEL(12.4-16R4)	100K0716
	01R11004	REAR WHEEL(13.6-16)	100K0716

silverhorse.co.uk

Item	Part No.	Description	Book
FRONT WHEEL/REAR WHEEL	01R11005	REAR WHEEL(13.6-16)	100K0716
LABELS	01S10101	LABEL [ENGLISH]	100K0716
	01S10102	LABEL [FRENCH]	100K0716
ACCESSORIES AND SERVICE PARTS	01T105	ACCESSORIES AND SERVICE PARTS	100K0716
OPTION	01U800	ALTERNATOR KIT [OPTION]	100K0716
	01U802	ALTERNATOR [COMPONENT PARTS] [OPTION]	100K0716
	01U805	WORKING LIGHT KIT [OPTION]	100K0716
	01U80501	WORKING LIGHT KIT [OPTION]	100K0716
	01U83501	MID PTO [OPTION]	100K0716
	01U83502	MID PTO [OPTION]	100K0716

silverhorn.co.uk

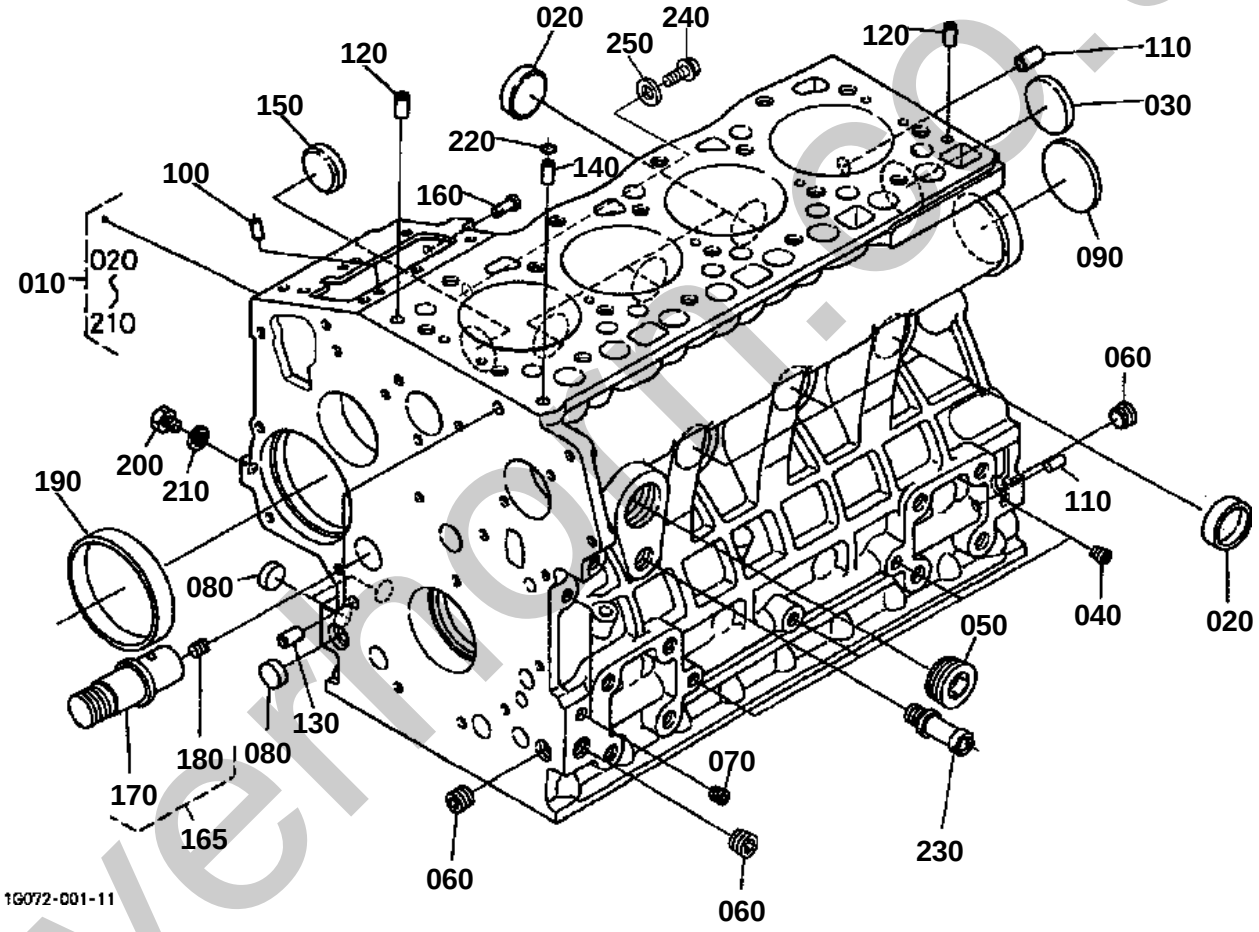

silvermoll.co.uk

CRANKCASE

S.No.;<=3Y9499NOTE:ORDER BY REF.No.010 NEW PART.and Fig.No.007 REF.No.040

↔ Interchangeable; ≠ not interchangeable; ← new for old; → old for new

REF.No	Part No.	Description	Q'ty	S.No.	I/C	REMARKS	Weight (kgf)	Weight (lb)
010	16281-01040	COMP.CRANKCACE	1	<=2E0004			46	101.2
010	16281-01042	COMP.CRANKCASE	1	>=3L0007	¬	NOT SALE SEE NOTE	0	0
010	16281-01043	COMP.CRANKCASE	1	>=3N0007	¬	NOT SALE SEE NOTE	46	101.2
010	16281-01044	COMP.CRANKCASE	1		1		46	101.2
020	15451-96270	CAP SEALING	6				0.001	0.0022
030	15221-03490	CAP SEALING	1				0.02	0.044
040	15261-96010	PLUG	4				0.002	0.0044
050	16683-96020	PLUG	1				0.07	0.154
060	16241-96010	PLUG	3				0.007	0.0154
070	15521-96020	PLUG	2				0.003	0.0066
080	17391-96160	PLUG EXPANSION	3				0.003	0.0066
090	16271-96160	PLUG EXPANSION	1				0.025	0.055
100	16225-94510	PIN STRAIGHT	2				0	0
100	05012-00508	PIN STRAIGHT	2		«		0.001	0.0022
110	16221-94530	PIN STRAIGHT	2				0.006	0.0132
110	05012-00814	PIN STRAIGHT	2		«		0.006	0.0132
120	16221-94520	PIN STRAIGHT	2				0.005	0.011
130	15231-33960	PIN PIPE	2				0.001	0.0022
140	16241-33650	PIN PIPE	1				0.002	0.0044
150	16241-96262	PLUG	1				0.007	0.0154
160	16221-56280	PIN START SPRING	1				0.005	0.011
165	16251-24060	COMP SHAFT IDLE	1				0.18	0.396
170	16251-24260	SHAFT IDLE GEAR	1			NOT SALE	0.18	0.396
180	15521-93610	SCREW SET	1				0.002	0.0044
190	16271-55350	BUSH GOVERNOR GEAR	1				0.06	0.132
200	15469-33610	PLUG	1				0.008	0.0176
210	15021-33660	GASKET	1				0.001	0.0022
220	15221-33700	O RING	1				0.001	0.0022
230	15321-73340	PIPE WATER RETURN	1				0.016	0.0352
240	01754-50610	BOLT FLANGE	1	>=3L0007			0.006	0.0132
250	15601-96650	GASKET	1	>=3L0007			0.001	0.0022

silvermorn.co.uk

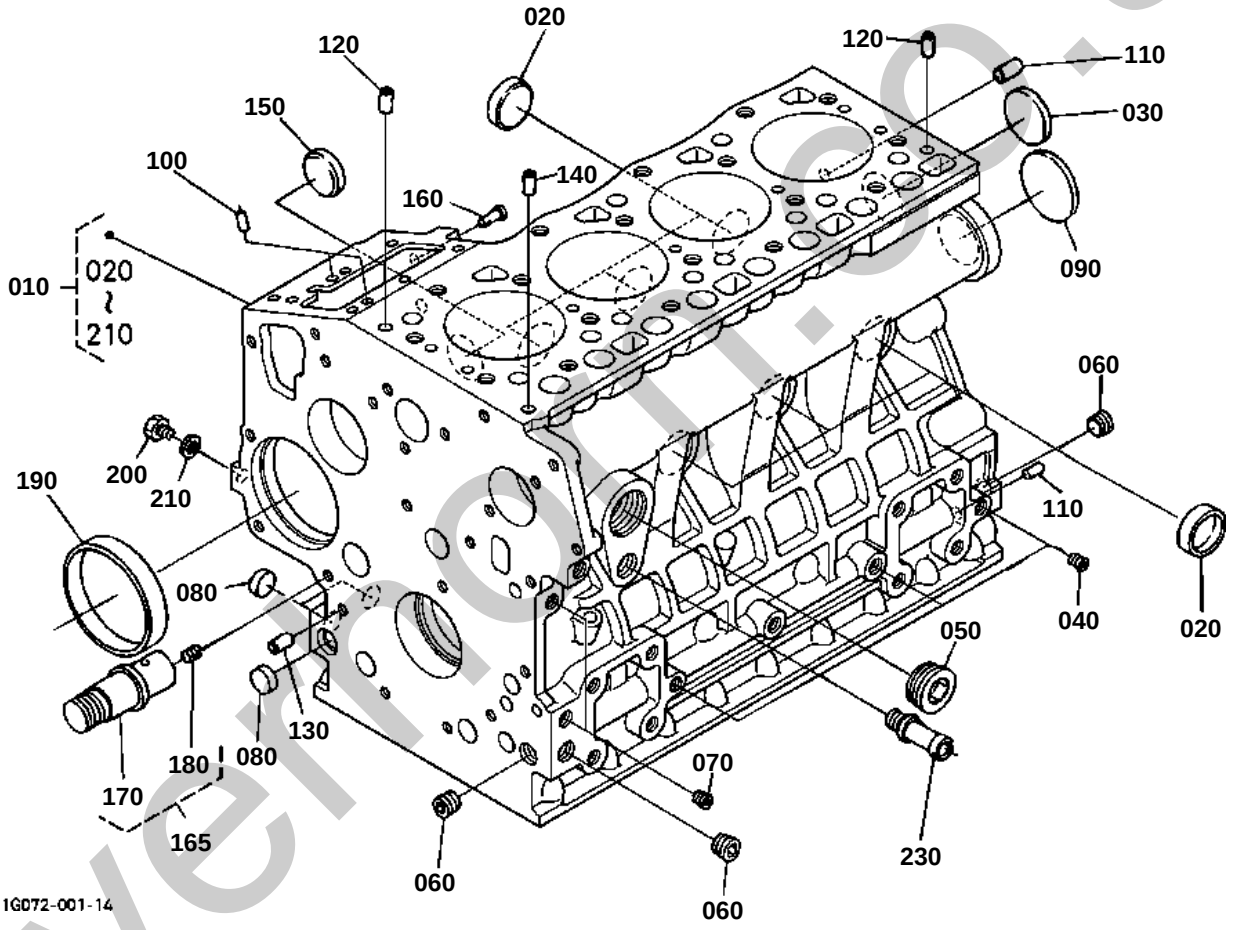

silvermoll.co.uk

OLD PARTS

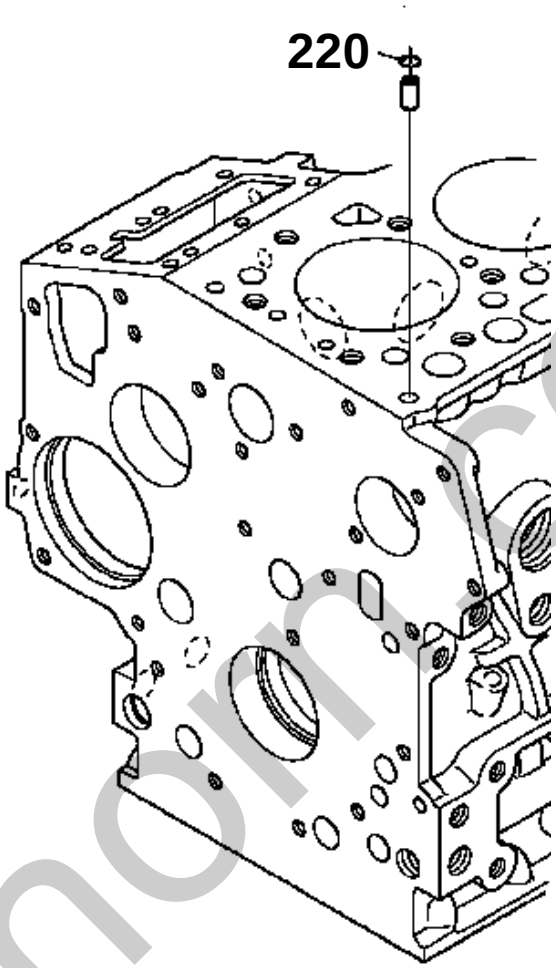

1G093-800-10

silverhorn.co.uk

CRANKCASE

S.No.;>=4A0001NOTE:ORDER BY REF.No.010 NEW PART.and Fig.No.007 REF.No.040

↔ Interchangeable; ≠ not interchangeable; ← new for old; → old for new

REF.No	Part No.	Description	Q'ty	S.No.	I/C	REMARKS	Weight (kgf)	Weight (lb)
010	1G093-01010	COMP.CRANKCASE	1	<=4Z0548		NOT SALE SEE NOTE	47	103.4
010	1G093-01012	COMP.CRANKCASE	1	>=5A0001	1		47	103.4
020	15451-96270	CAP SEALING	6				0.001	0.0022
030	15221-03490	CAP SEALING	1				0.02	0.044
040	15261-96010	PLUG	4				0.002	0.0044
050	16683-96020	PLUG	1				0.07	0.154
060	16241-96010	PLUG	3				0.007	0.0154
070	15521-96020	PLUG	2				0.003	0.0066
080	17391-96160	PLUG EXPANSION	3				0.003	0.0066
090	16271-96160	PLUG EXPANSION	1				0.025	0.055
100	05012-00508	PIN STRAIGHT	2				0.001	0.0022
110	05012-00814	PIN STRAIGHT	2				0.006	0.0132
120	16221-94520	PIN STRAIGHT	2				0.005	0.011
130	15231-33960	PIN PIPE	2				0.001	0.0022
140	16241-33650	PIN PIPE	1				0.002	0.0044
150	16241-96262	PLUG	1				0.007	0.0154
160	16221-56280	PIN START SPRING	1				0.005	0.011
165	16251-24060	COMP SHAFT IDLE	1				0.18	0.396
170	16251-24260	SHAFT IDLE GEAR	1			NOT SALE	0.18	0.396
180	15521-93610	SCREW SET	1				0.002	0.0044
190	16271-55350	BUSH GOVERNOR GEAR	1				0.06	0.132
200	15221-33610	PLUG	1				0.009	0.0198
210	15021-33660	GASKET	1				0.001	0.0022
220	15221-33700	O RING	1	<=4A9508			0.001	0.0022
230	15321-73340	PIPE WATER RETURN	1				0.016	0.0352

silverhorn.co.uk

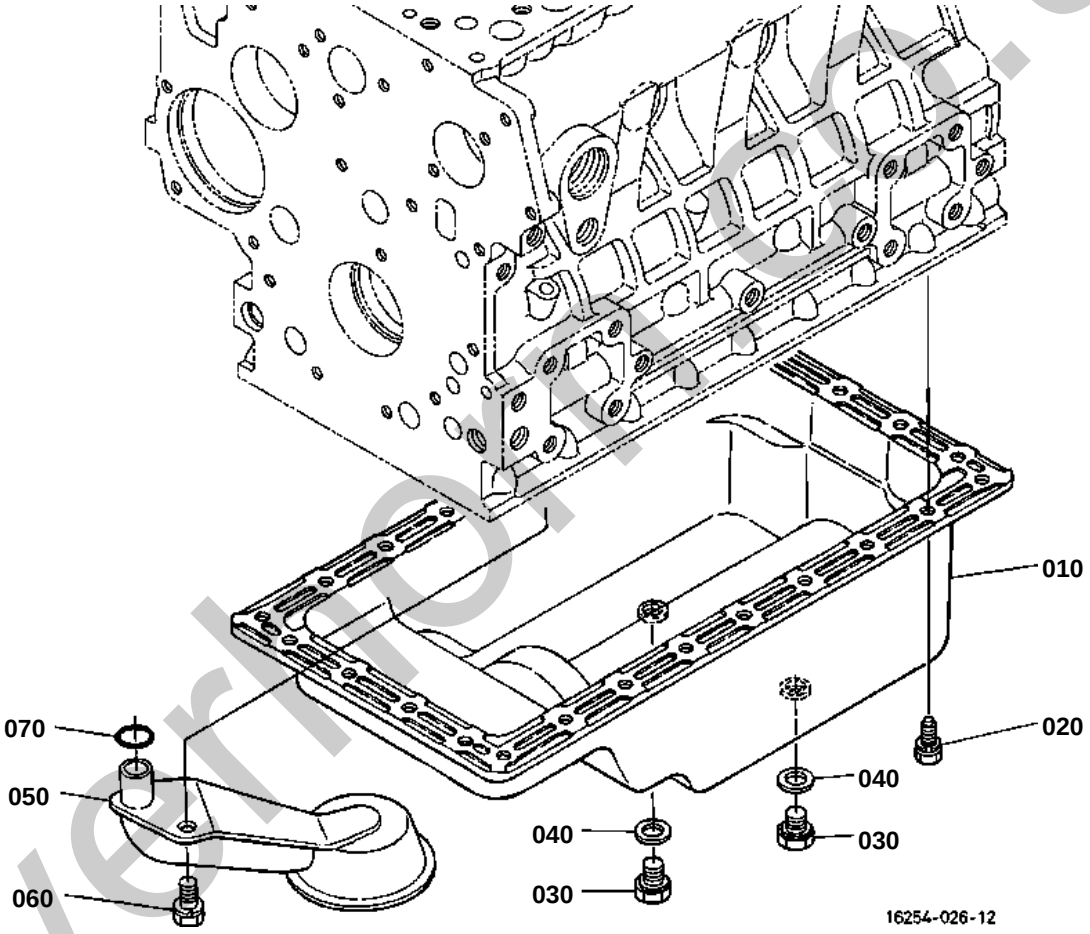

silverhorse.uk

OIL PAN

↔ Interchangeable; ≠ not interchangeable; ← new for old; → old for new

REF.No	Part No.	Description	Q'ty	S.No.	I/C	REMARKS	Weight (kgf)	Weight (lb)
010	16271-01502	COMP.OIL PAN	1				1.7	3.74
020	01023-50612	BOLT	26	<=2S9607			0.005	0.011
020	16221-91120	BOLT	26	>=2U0004	1		0.005	0.011
030	16271-33750	PLUG	2				0.1	0.22
040	15471-96650	GASKET	2				0.002	0.0044
050	16271-32115	FILTER OIL	1				0.24	0.528
060	01123-60816	BOLT	1				0.01	0.022
070	04814-00160	O RING	1				0.001	0.0022

silverhorn.co.uk

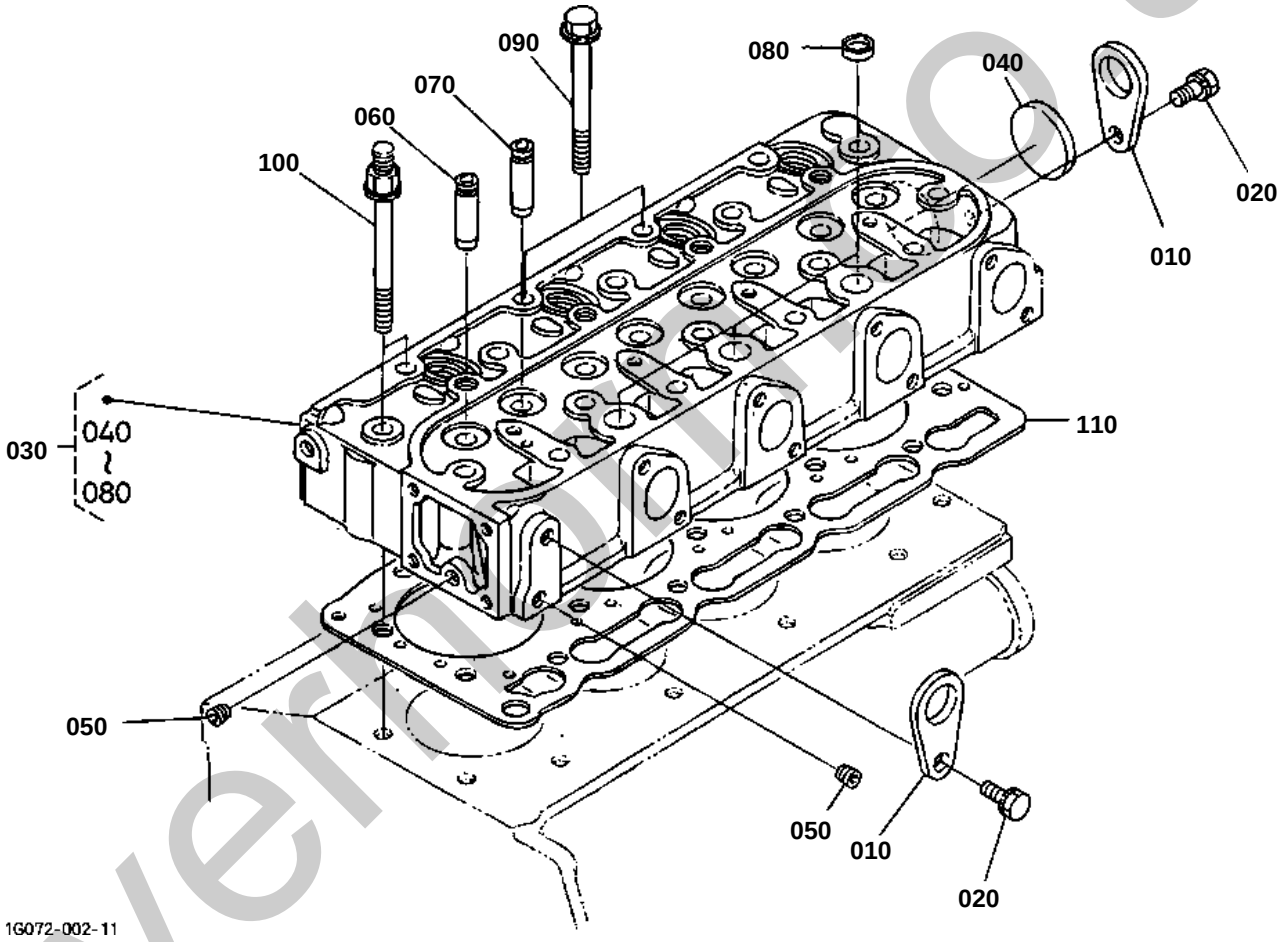

silvermachine.co.uk

OLD PARTS

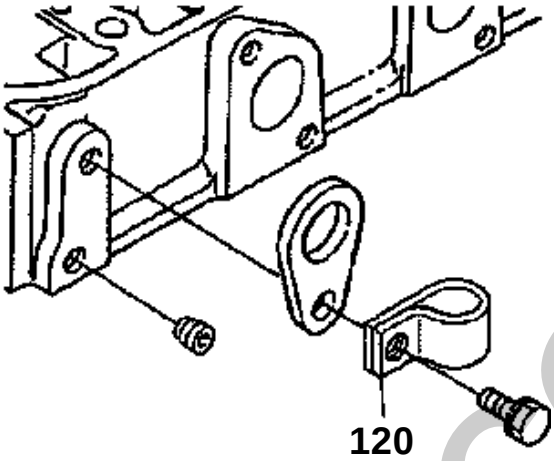

1G041-800-10

silverhorn.co.uk

CYLINDER HEAD

↔ Interchangeable; ≠ not interchangeable; ← new for old; → old for new

REF.No	Part No.	Description	Q'ty	S.No.	I/C	REMARKS	Weight (kgf)	Weight (lb)
010	15221-01750	HOOK ENGINE	2				0.04	0.088
020	01123-50818	BOLT	2				0.012	0.0264
030	16062-03042	COMP.CYLINDER HEAD	1	<=3Y9499			11.5	25.3
030	1G091-03040	COMP.CYLINDER HEAD	1	>=4A0001	1		12.1	26.62
040	15321-96260	CAP SEALING	1				0.001	0.0022
050	15261-96010	PLUG	2				0.002	0.0044
060	16241-13540	GUIDE INLET VALVE	4				0.02	0.044
060	16261-13540	GUIDE INLET VALVE	4		«		0.02	0.044
070	16241-13560	GUIDE EXHAUST VALVE	4				0.01	0.022
070	16261-13560	GUIDE EXHAUST VALVE	4		«		0.019	0.0418
080	15261-03370	CAP SEALING	3				0.005	0.011
090	16241-03450	BOLT CYLINDER HEAD	16				0.07	0.154
100	16216-03450	BOLT CYLINDER HEAD	2				0.07	0.154
110	16292-03310	GASKET CYLINDER HEAD	1	<=4A9508			0.09	0.198
110	16394-03310	GASKET CYLINDER HEAD	1	>=4C0001	1		0.2	0.44
120	52200-41160	CLAMP CORD	1	<=4Z0548			0.01	0.022

silverhorn.co.uk

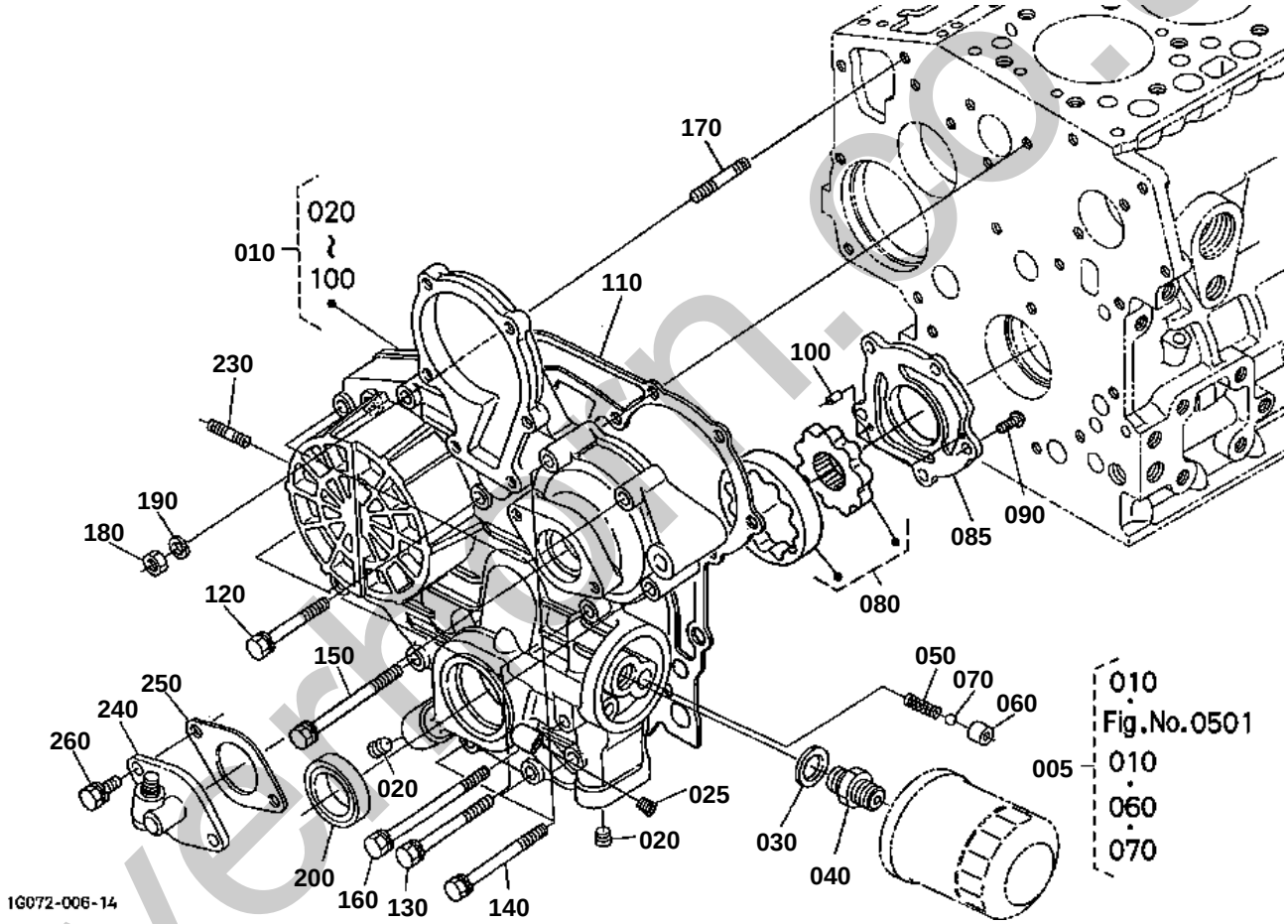

silverton.co.uk

GEAR CASE

↔ Interchangeable; ≠ not interchangeable; ← new for old; → old for new

REF.No	Part No.	Description	Q'ty	S.No.	I/C	REMARKS	Weight (kgf)	Weight (lb)
005	16216-04017	ASSY CASE GEAR	1			NOT SALE	3.46	7.612
005	1G063-04012	ASSY CASE GEAR	1		«	NOT SALE	0	0
010	16216-04026	COMP.CASE GEAR	1	<=5F0152			2.45	5.39
010	1G063-04020	COMP.CASE GEAR	1	>=5G0001	¬		2.5	5.5
020	16241-96020	PLUG	2				0.015	0.033
025	15521-96020	PLUG	1				0.003	0.0066
030	04011-50180	WASHER PLAIN	1				0.012	0.0264
040	15241-32290	JOINT PIPE	1				0.053	0.1166
050	16241-36950	SPRING	1				0.015	0.033
060	16241-36930	SEAT VALVE	1				0.032	0.0704
070	07715-00201	BALL	1				0.008	0.0176
080	16241-35070	ASSY ROTOR OIL PUMP	1				0.27	0.594
085	16251-35130	COVER OIL PUMP	1				0.09	0.198
090	03017-50620	SCREW CR-REC-BD-HD	5				0.005	0.011
100	05012-00410	PIN STRAIGHT	2				0.001	0.0022
110	16264-04130	GASKET GEAR CASE	1				0.01	0.022
120	01023-50645	BOLT	3				0.01	0.022
130	01023-60650	BOLT	4				0.015	0.033
140	01023-50655	BOLT	4				0.012	0.0264
150	01023-50665	BOLT	1				0.015	0.033
160	16241-91040	BOLT	1				0.015	0.033
170	16245-91530	STUD	1				0.01	0.022
180	02056-50060	NUT	1				0.002	0.0044
190	04512-60060	WASHER SPRING	1				0.001	0.0022
200	16241-04212	SEAL OIL	1				0.012	0.0264
210	99999-99999	BLANK	0				0	0
220	99999-99999	BLANK	0				0	0
230	16245-91540	STUD	2				0.005	0.011
240	58417-25950	ASSY GEAR CASE H/M	1				0.29	0.638
250	16264-88130	GASKET H/METER UNIT	1				0.002	0.0044
260	01023-50618	BOLT	2				0.006	0.0132

silvermorn.co.uk

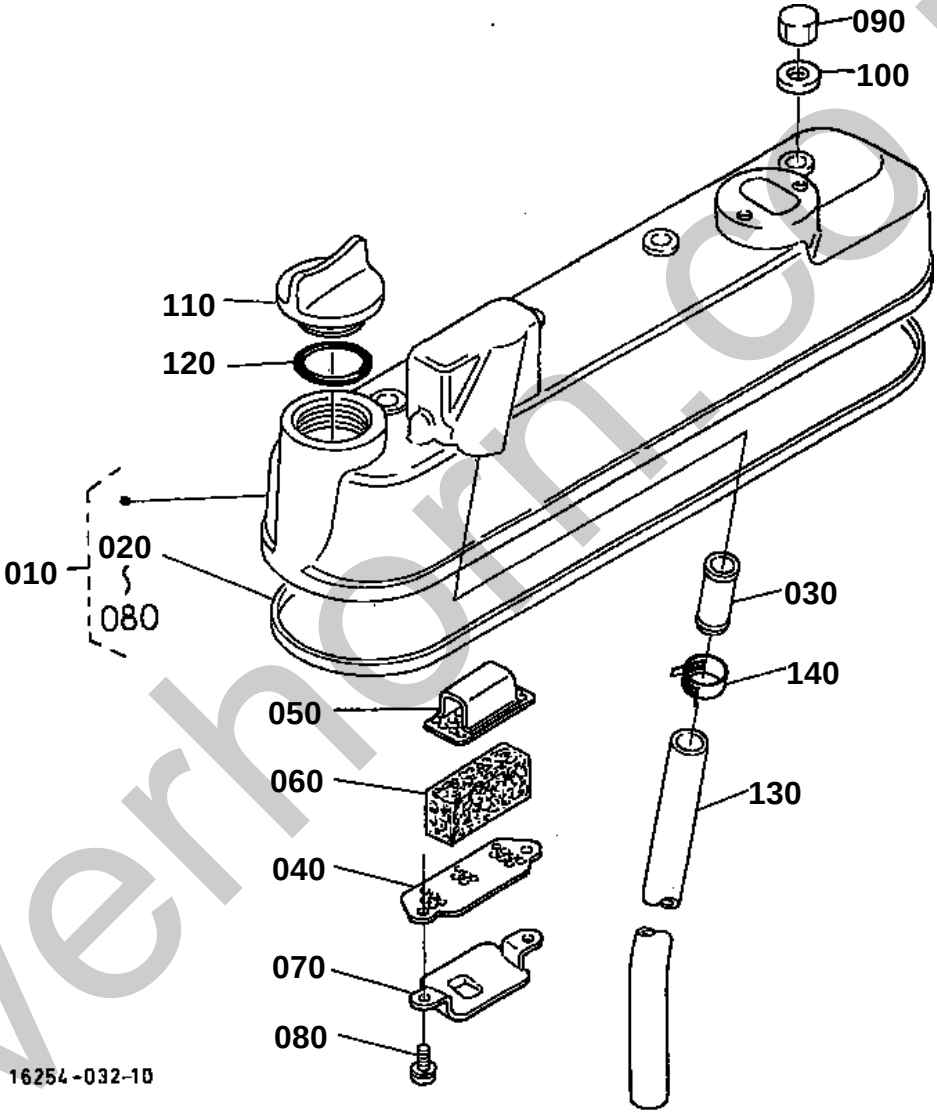

silverhorn.co.uk

HEAD COVER

S.No.;<=3Y9499

↔ Interchangeable; ≠ not interchangeable; ← new for old; → old for new

REF.No	Part No.	Description	Q'ty	S.No.	I/C	REMARKS	Weight (kgf)	Weight (lb)
010	16241-14500	ASSY COVER CYL.HEAD	1				1.02	2.244
020	16241-14520	GASKET HEAD COVER	1				0.012	0.0264
030	16241-05550	JOINT BREATHER PIPE	1				0.02	0.044
040	16241-05140	PLATE B/THER ELEMENT	1				0.005	0.011
050	16241-05150	PLATE B/THER ELEMENT	1				0.01	0.022
060	16241-05670	ELEMENT BREATHER	1				0.01	0.022
070	16241-05370	OIL SHIELD BREATHER	1				0.01	0.022
080	03024-50510	SCREW WITH WASHER	2				0.002	0.0044
090	15952-92330	NUT	4				0.01	0.022
100	15951-96660	GASKET	4				0.001	0.0022
110	E9151-33140	PLUG OIL FILLER	1				0.017	0.0374
120	04814-50300	O RING	1				0.001	0.0022
130	16271-05510	PIPE BREATHER	1				0.06	0.132
140	16241-33510	BAND PIPE	1				0.005	0.011

silverhorn.co.uk

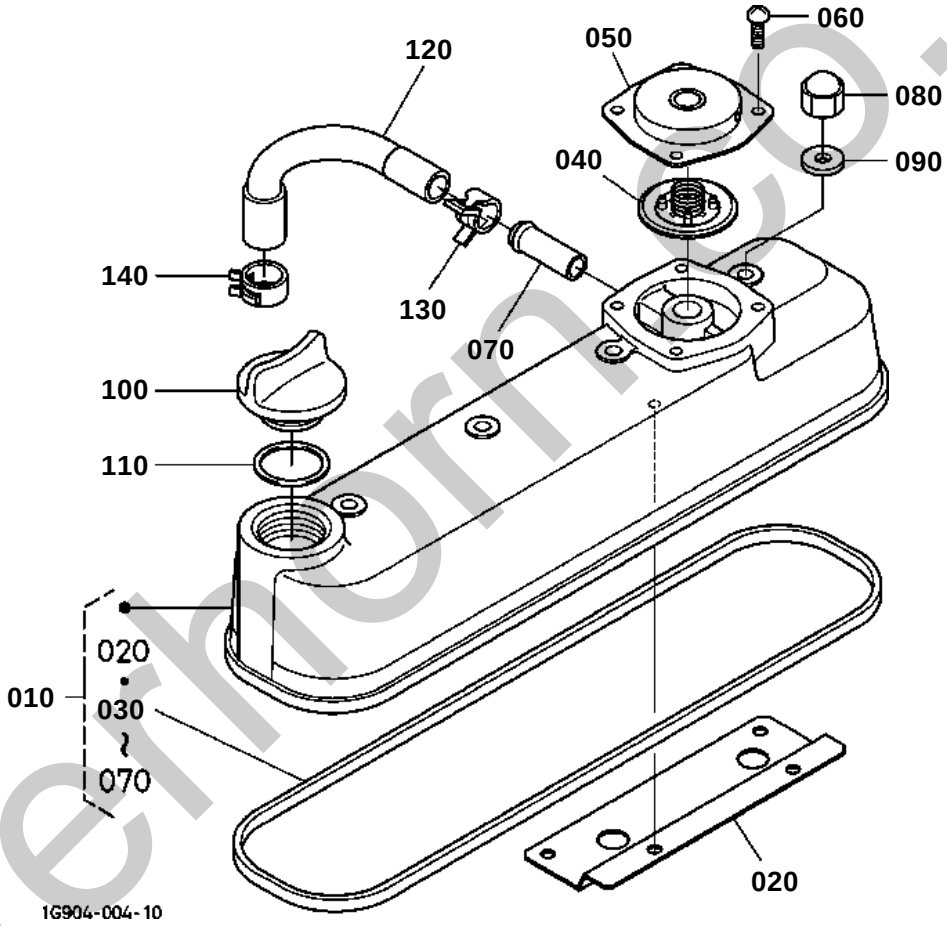

silvermorn.co.uk

HEAD COVER

S.No.;>=4A0001

↔ Interchangeable; ≠ not interchangeable; ← new for old; → old for new

REF.No	Part No.	Description	Q'ty	S.No.	I/C	REMARKS	Weight (kgf)	Weight (lb)
010	1G072-14500	ASSY COVER CYL.HEAD	1	<=4J8648			0	0
010	1G072-14503	ASSY COVER CYL.HEAD	1	>=4L0001	¬		0.98	2.156
010	1G072-14504	ASSY COVER CYL.HEAD	1	>=5G0001	¬		0.98	2.156
020	1G032-05370	SHIELD BREATHER	1				0.03	0.066
030	16241-14520	GASKET HEAD COVER	1				0.012	0.0264
040	1G911-05200	COMP.VALVE BREATHER	1	<=4J8648			0	0
040	1G911-05202	COMP.VALVE BREATHER	1	>=4L0001	¬		0	0
040	1G911-05203	COMP.VALVE BREATHER	1	>=5G0001	¬		0.01	0.022
050	1G801-05120	COVER BREATHER	1				0.035	0.077
060	03054-50510	SCREW PAN-HEAD	4				0.003	0.0066
070	17331-73342	PIPE WATER RETURN	1				0.01	0.022
080	15952-92330	NUT	4				0.01	0.022
090	15951-96660	GASKET	4				0.001	0.0022
100	E9151-33140	PLUG OIL FILLER	1				0.017	0.0374
110	04814-50300	O RING	1				0.001	0.0022
120	1G032-05510	TUBE BREATHER	1				0.017	0.0374
130	09318-88150	CLAMP HOSE	1				0.004	0.0088
140	16259-05580	CLAMP HOSE	1				0.03	0.066

silverhorn.co.uk

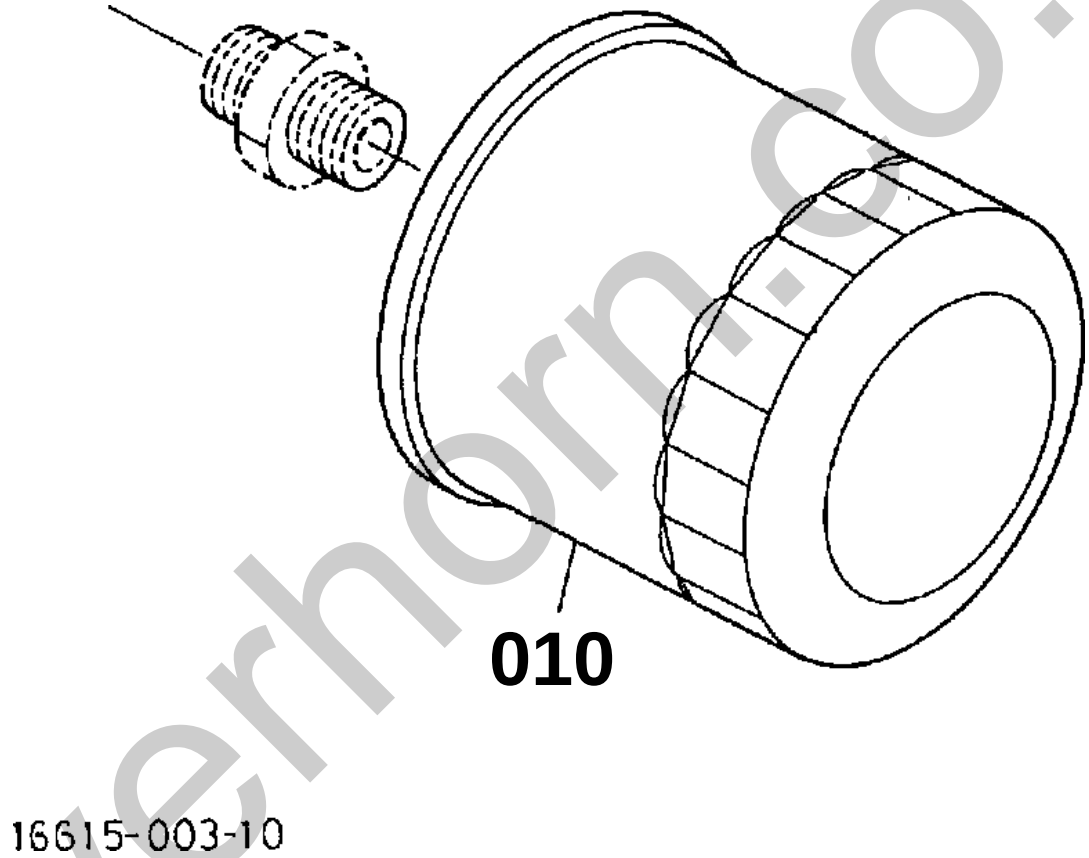

silverhorn.co.uk

OIL FILTER

↔ Interchangeable; ≠ not interchangeable; ← new for old; → old for new

REF.No	Part No.	Description	Q'ty	S.No.	I/C	REMARKS	Weight (kgf)	Weight (lb)
010	16271-32092	ASSY CARTRIDGE OIL	1				0.4	0.88

silverhorn.co.uk

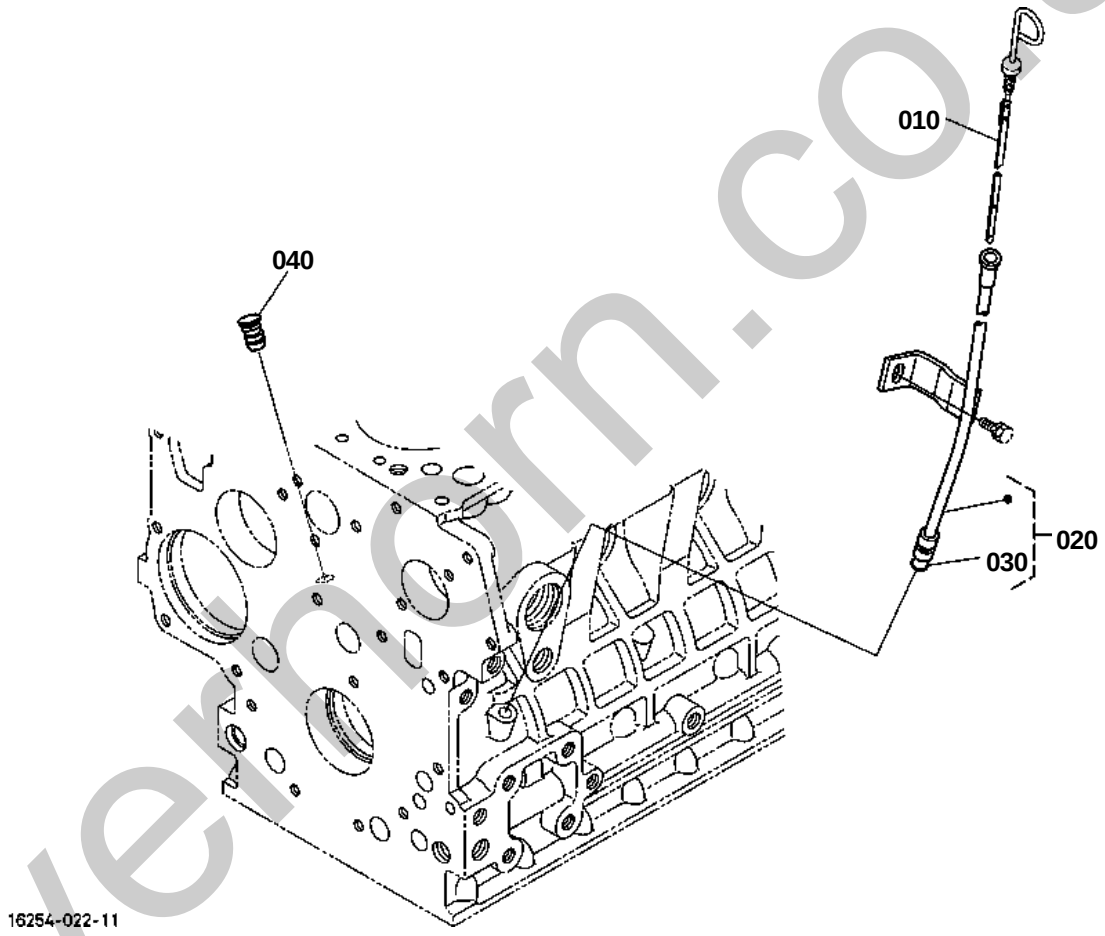

silverhorn.co.uk

DIPSTICK AND GUIDE

↔ Interchangeable; ≠ not interchangeable; ← new for old; → old for new

REF.No	Part No.	Description	Q'ty	S.No.	I/C	REMARKS	Weight (kgf)	Weight (lb)
010	16216-36412	GAUGE OIL	1	<=4J8648			0.03	0.066
010	16216-36413	GAUGE OIL	1	>=4L0001	¬		0.03	0.066
020	16216-36500	ASSY GUIDE OIL GAUGE	1	<=3Y9499			0.14	0.308
020	16216-36502	ASSY GUIDE OIL GAUGE	1	>=4A0001	¬		0.14	0.308
020	16216-36503	ASSY GUIDE OIL GAUGE	1	>=4W0001	¬		0.14	0.308
030	04814-00090	O RING	1				0.001	0.0022
040	1G513-36550	PLUG OIL GAUGE	1	>=5A0001			0	0

silverhorn.co.uk

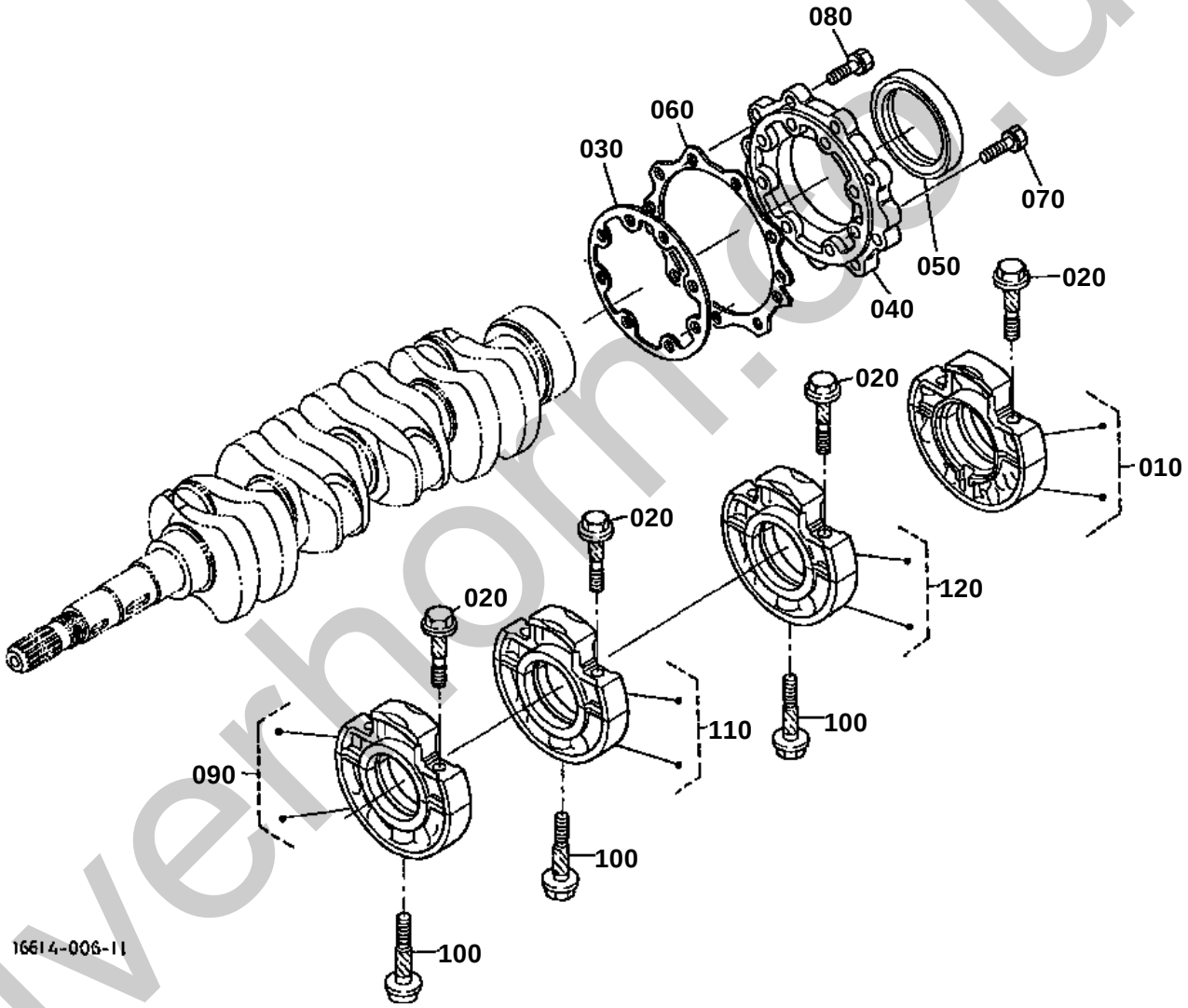

silverhorn.co.uk

MAIN BEARING CASE

↔ Interchangeable; ≠ not interchangeable; ← new for old; → old for new

REF.No	Part No.	Description	Q'ty	S.No.	I/C	REMARKS	Weight (kgf)	Weight (lb)
010	16241-04092	ASSY CASE MAIN BRG.	1				1.13	2.486
020	16241-04540	BOLT BEARING CASE	8				0.02	0.044
030	16264-04360	GASKET BRG.CASE	1				0.002	0.0044
040	16241-04813	COVER BEARING CASE	1				0.22	0.484
050	16271-04460	SEAL OIL	1				0.04	0.088
060	16264-04820	GASKET	1				0.008	0.0176
070	01023-50625	BOLT	8				0.007	0.0154
080	01023-50620	BOLT	9				0.006	0.0132
090	16261-04040	ASSY CASE MAIN BRG.	1				0.9	1.98
100	16241-04560	BOLT BEARING CASE	3				0.03	0.066
110	16261-04050	ASSY CASE MAIN BRG.	1				1.11	2.442
120	16282-04060	ASSY CASE MAIN BRG.	1				1	2.2

silverhorn.co.uk

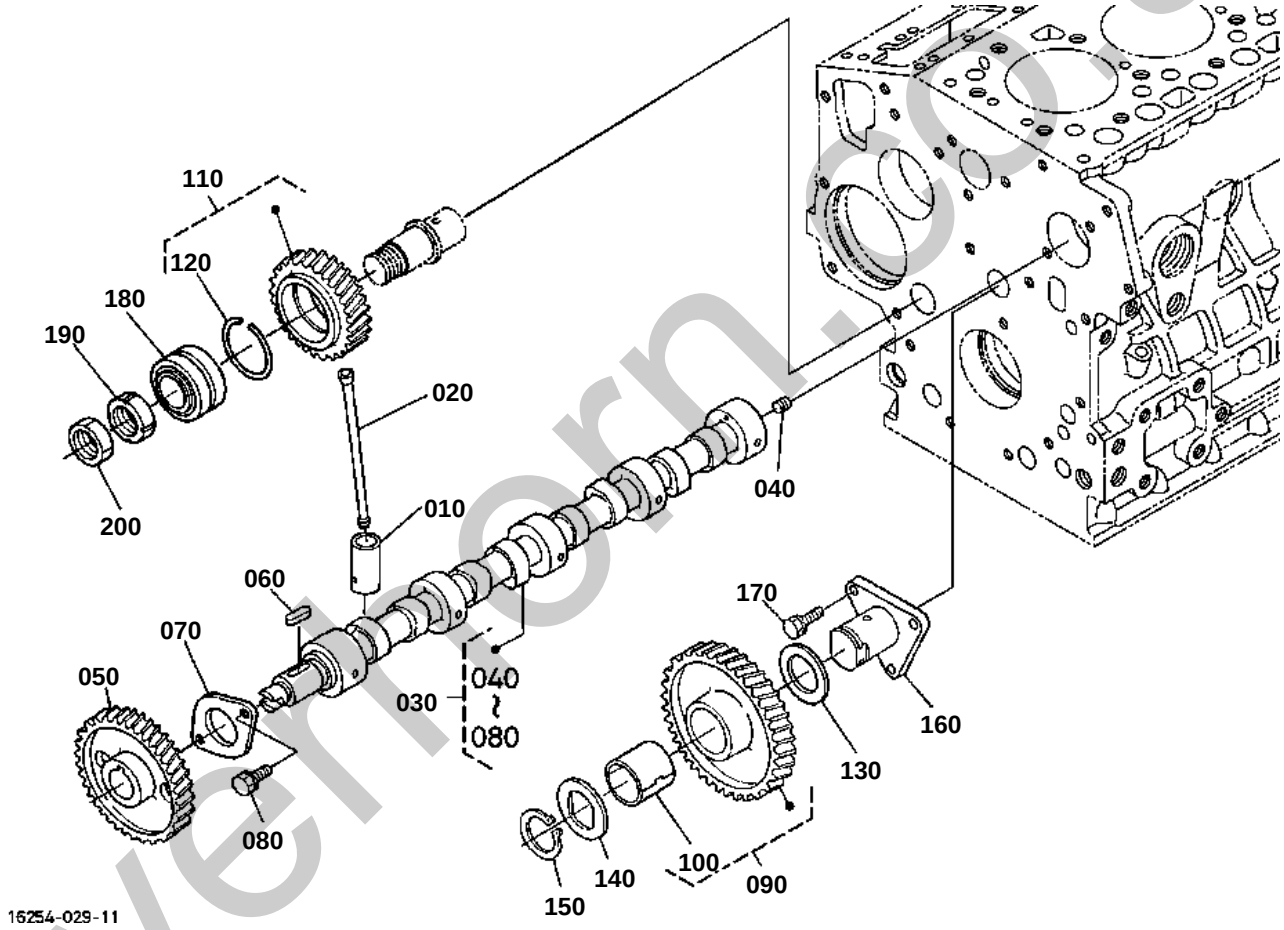

silverhorn.co.uk

CAMSHAFT AND IDLE GEAR SHAFT

↔ Interchangeable; ≠ not interchangeable; ← new for old; → old for new

REF.No	Part No.	Description	Q'ty	S.No.	I/C	REMARKS	Weight (kgf)	Weight (lb)
010	16261-15550	TAPPET	8				0.035	0.077
020	16241-15110	PUSH ROD	8				0.03	0.066
030	16271-16012	ASSY CAMSHAFT	1				0	0
030	16271-16910	ASSY CAMSHAFT	1		«		1.8	3.96
040	15521-93610	SCREW SET	1				0.002	0.0044
050	16241-16510	GEAR CAM	1				0.45	0.99
060	05712-00518	KEY FEATHER	1				0.003	0.0066
070	16241-16270	STOPPER CAMSHAFT	1				0.04	0.088
080	01023-50616	BOLT	2				0.005	0.011
090	16251-24010	COMP GEAR IDLE	1				0.63	1.386
100	16251-24980	BUSH IDLE GEAR	1				0.035	0.077
110	16251-24020	COMP GEAR IDLE	1				1.6	3.52
120	16251-24320	CIR CLIP INTERNAL	1				0.01	0.022
130	16251-24360	COLLAR IDLE GEAR	1				0.012	0.0264
140	15741-24370	COLLAR IDLE GEAR	1				0.015	0.033
150	15741-24320	CIR CLIP IDLE GEAR	1				0.01	0.022
160	16251-24250	SHAFT IDLE GEAR	1				0.36	0.792
170	01023-50616	BOLT	3				0.005	0.011
180	16251-24350	BEARING TAPER-ROLLER	1				0.21	0.462
190	02410-00040	NUT BEARING	1				0.019	0.0418
200	16251-92210	NUT LOCK	1				0.01	0.022

silverhorn.co.uk

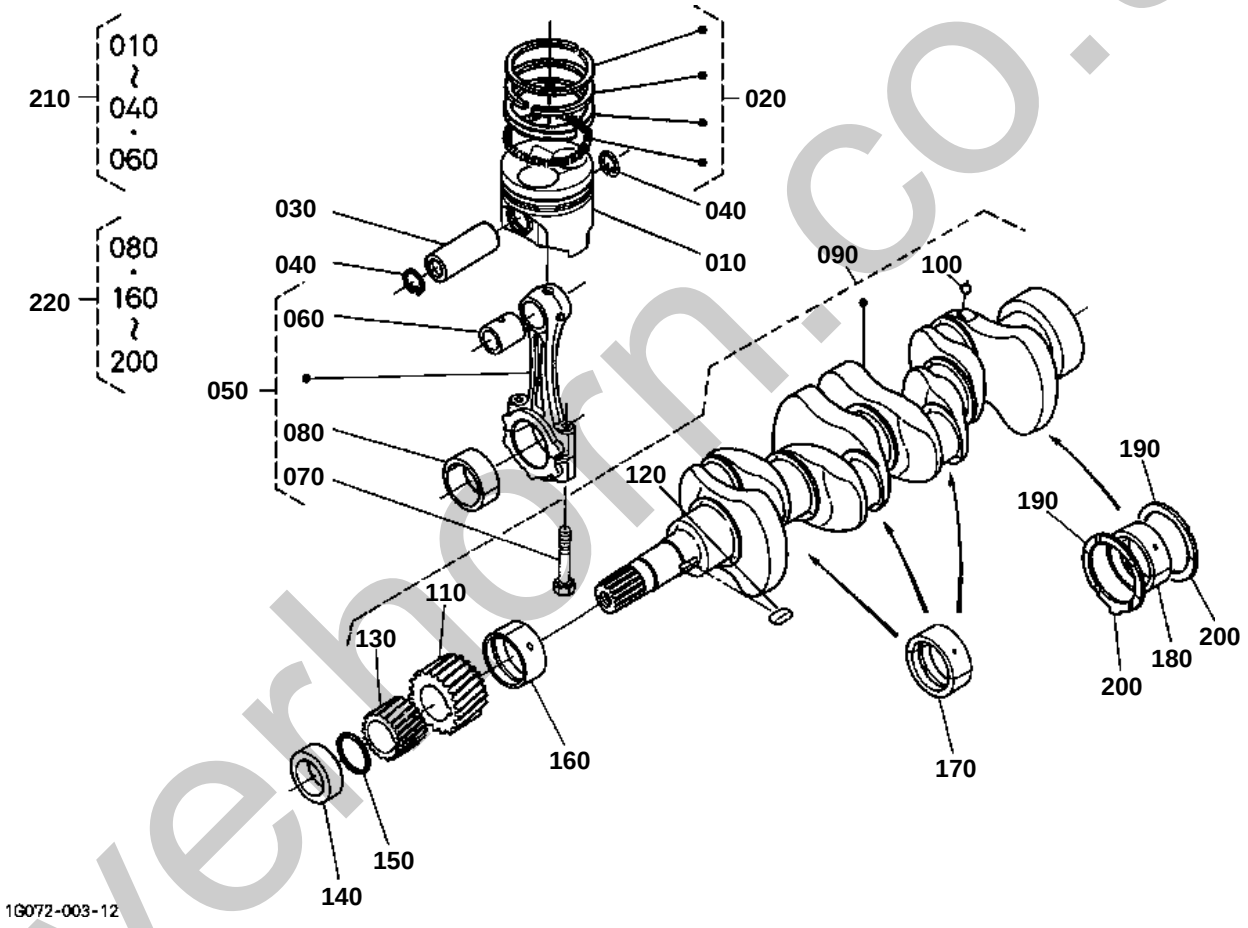

silverhorn.co.uk

OLD PARTS

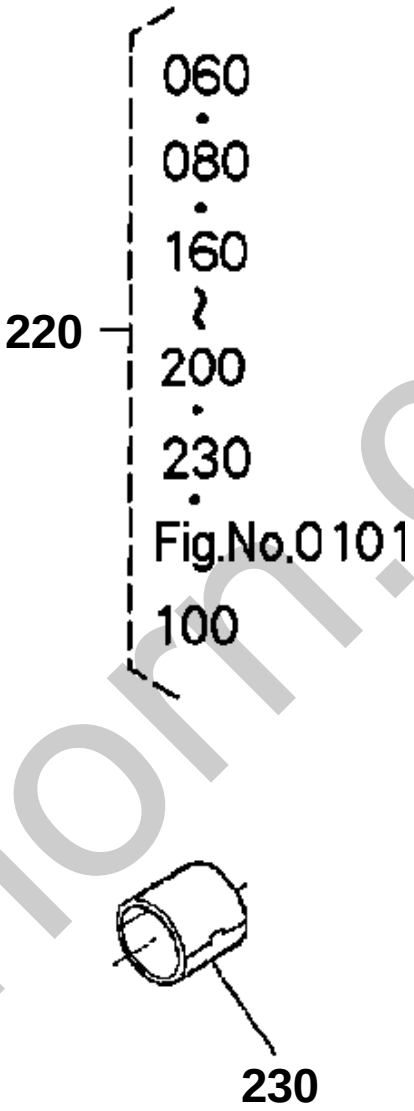

1G093-802-10

silverhorn.co.uk

PISTON AND CRANKSHAFT

NOTE:ORDER BY REF.No.010 and 020 NEW PART.

↔ Interchangeable; ≠ not interchangeable; ← new for old; → old for new

REF.No	Part No.	Description	Q'ty	S.No.	I/C	REMARKS	Weight (kgf)	Weight (lb)
010	16060-21110	PISTON	4	<=5F0152		STD SEE NOTE	0.4	0.88
010	16060-21113	PISTON	4	>=5G0001	1	STD	0.4	0.88
010	16060-21910	PISTON	4	<=5F0152		+0.5mm SEE NOTE	0.415	0.913
010	16060-21913	PISTON	4	>=5G0001	1	+0.5mm	0.415	0.913
020	16261-21050	ASSY PISTON RING	4	<=5F0152		STD	0.042	0.0924
020	16292-21050	ASSY PISTON RING	4	>=5G0001	1	STD	0.05	0.11
020	16261-21090	ASSY PISTON RING	4	<=5F0152		+0.5mm	0.05	0.11
020	16292-21090	ASSY PISTON RING	4	>=5G0001	1	+0.5mm	0.014	0.0308
030	16241-21310	PIN PISTON	4				0.135	0.297
040	16241-21330	CIR CLIP PISTON PIN	8				0.002	0.0044
050	16241-22012	ASSY ROD CONNECTING	4				0.545	1.199
060	16241-21980	BUSH PISTON PIN	4	<=3M1525			0	0
060	16241-21982	BUSH PISTON PIN	4	>=3N0007	¬		0.03	0.066
070	16241-22140	ROD BOLT	8				0	0
070	16241-22142	BOLT CONNECTING ROD	8		«		0.024	0.0528
080	16241-22310	METAL CRANKPIN	4			STD SET	0.038	0.0836
080	16241-22970	METAL CRANKPIN	4			-0.2mm SET	0.08	0.176
080	16241-22980	METAL CRANKPIN	4			-0.4mm SET	0.1	0.22
090	16271-23013	COMP.CRANKSHAFT	1				5	11
100	07715-00401	BALL	4				0.001	0.0022
110	16241-24110	GEAR CRANK	1				0.15	0.33
120	16271-95230	KEY	1				0.005	0.011
130	16241-35630	GEAR OIL PUMP DRIVE	1				0.102	0.2244
140	16271-23250	COLLAR CRANKSHAFT	1				0.055	0.121
150	04814-10280	RING	1				0.001	0.0022
160	16241-23470	METAL CRANKSHAFT	1			STD	0.06	0.132
160	16241-23910	METAL CRANKSHAFT	1			-0.2mm	0.03	0.066
160	16241-23920	METAL CRANKSHAFT	1			-0.4mm	0.068	0.1496
170	16241-23480	METAL CRANKSHAFT	3			STD SET	0.05	0.11
170	16241-23930	METAL CRANKSHAFT	3			-0.2mm SET	0.1	0.22
170	16241-23940	METAL CRANKSHAFT	3			-0.4mm SET	0.05	0.11
180	16292-23490	METAL CRANKSHAFT	1			STD SET	0.07	0.154
180	16292-23860	METAL CRANKSHAFT	1			-0.2mm SET	0.05	0.11
180	16292-23870	METAL CRANKSHAFT	1			-0.4mm SET	0.05	0.11
190	15521-23530	METAL SIDE	2			STD	0.01	0.022
190	15521-23950	METAL SIDE	2			+0.2mm	0.01	0.022
190	15521-23960	METAL SIDE	2			+0.4mm	0.01	0.022
200	19202-23540	METAL SIDE	2			STD	0.01	0.022
200	19202-23970	METAL SIDE	2			+0.2mm	0.01	0.022
200	19202-23980	METAL SIDE	2			+0.4mm	0.01	0.022
210	1G069-21770	KIT PISTON-RING	4	<=4R0312		STD	0	0
210	1G069-21772	KIT PISTON-RING	4	>=4U0001	¬	STD	0.65	1.43
210	1G069-21773	KIT PISTON-RING	4	>=5G0001	¬	STD	0.65	1.43
210	1G069-21792	KIT PISTON-RING	4	<=5F0152		+0.5mm	6.056	13.3232
210	1G069-21793	KIT PISTON-RING	4	>=5G0001	1	+0.5mm	0.4	0.88
220	1G090-23752	KIT METAL ENGINE	1	<=4T1477		STD	0	0
220	1G090-23753	KIT METAL ENGINE	1	>=4U0001	¬	STD	0.386	0.8492
220	1G090-23762	KIT METAL ENGINE	1	<=4T1477		+0.2mm	0	0
220	1G090-23763	KIT METAL ENGINE	1	>=4U0001	¬	+0.2mm	0.518	1.1396
220	1G090-23772	KIT METAL ENGINE	1	<=4T1477		+0.4mm	0	0
220	1G090-23773	KIT METAL ENGINE	1	>=4U0001	¬	+0.4mm	0.547	1.2034

silverform.co.uk

↔ Interchangeable; ≠ not interchangeable; ← new for old; → old for new

REF.No	Part No.	Description	Q'ty	S.No.	I/C	REMARKS	Weight (kgf)	Weight (lb)
230	16271-24280	BUSH IDLE GEAR	1	<=4T1477		OUT OF USE NOT SALE	0	0

silverhorn.co.uk

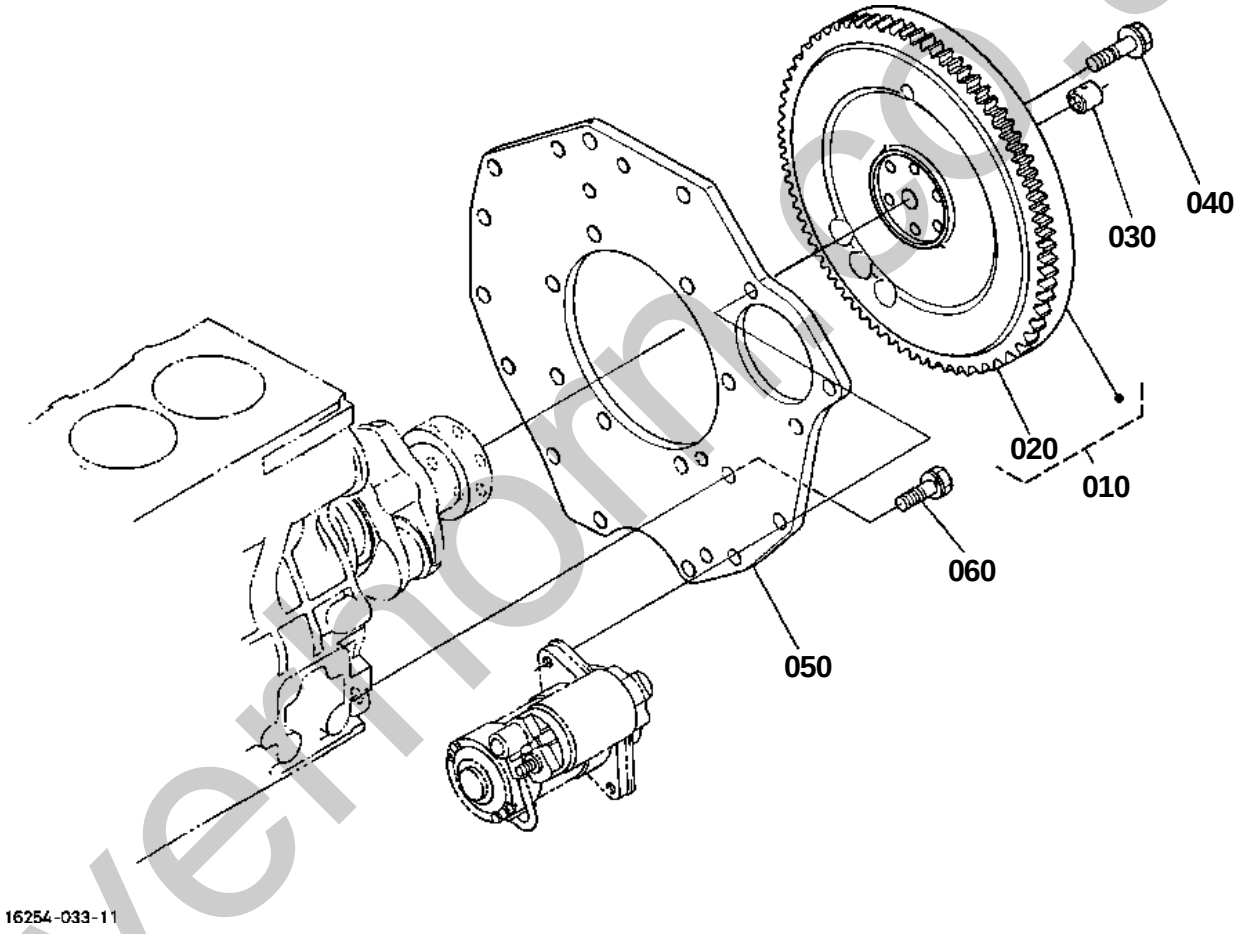

silverhorse.co.uk

FLYWHEEL

↔ Interchangeable; ≠ not interchangeable; ← new for old; → old for new

REF.No	Part No.	Description	Q'ty	S.No.	I/C	REMARKS	Weight (kgf)	Weight (lb)
010	17451-25012	COMP.FLYWHEEL	1				17.3	38.06
020	16261-63822	GEAR RING	1				0.79	1.738
030	66621-14120	BEARING DRY	1				0.006	0.0132
040	16271-25160	BOLT FLYWHEEL	6				0.036	0.0792
050	6C040-58912	PLATE REAR END	1				3.64	8.008
060	15261-91190	BOLT	8				0.03	0.066

silverhorn.co.uk

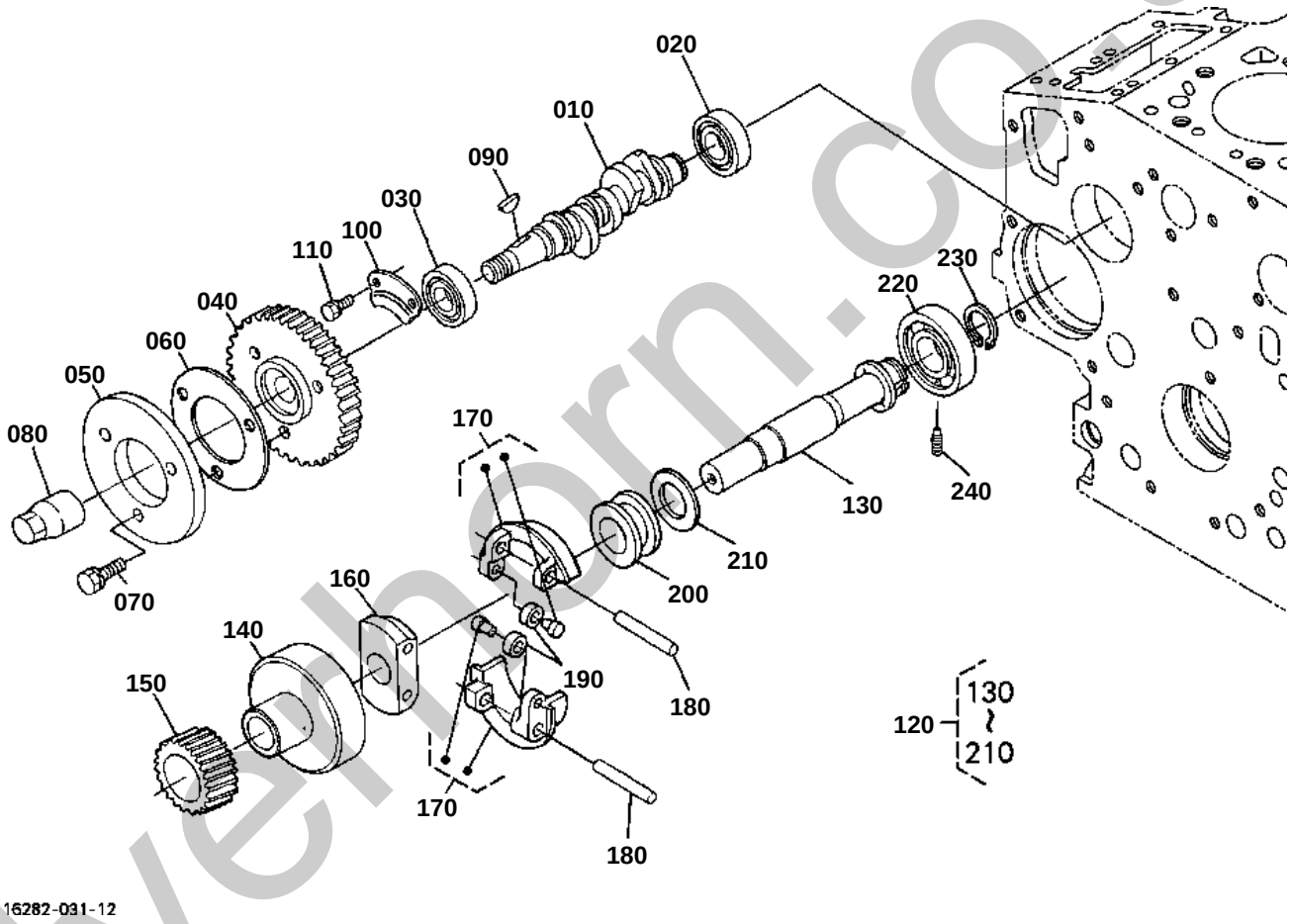

silverhorn.co.uk

FUEL CAMSHAFT AND GOVERNOR SHAFT

↔ Interchangeable; ≠ not interchangeable; ← new for old; → old for new

REF.No	Part No.	Description	Q'ty	S.No.	I/C	REMARKS	Weight (kgf)	Weight (lb)
010	16040-16170	CAMSHAFT FUEL	1				0.32	0.704
020	08103-06202	BEARING BALL	1				0.05	0.11
020	16261-97300	BEARING BALL	1		«		0.044	0.0968
030	08103-06204	BEARING BALL	1				0.105	0.231
030	16261-97310	BEARING BALL	1		«		0.1	0.22
040	16272-51150	GEAR INJECTION PUMP	1	<=3Y9499			0.49	1.078
040	1G065-51150	GEAR INJECTION PUMP	1	>=4A0001	1		0.49	1.078
050	16241-51113	CAM FUEL	1				0.196	0.4312
060	16241-51190	WASHER	1				0.029	0.0638
070	01023-50618	BOLT	3				0.006	0.0132
080	16241-92330	NUT	1				0.035	0.077
090	16241-95230	KEY WOODRUFF	1				0.001	0.0022
100	16241-16320	STOPPER FUEL.C/SHAFT	1				0.04	0.088
110	01023-50612	BOLT	2	<=2D0119			0.005	0.011
110	01023-50616	BOLT	2	>=2E0004	¬		0.005	0.011
120	16271-55013	ASSY SHAFT GOVERNOR	1				1.16	2.552
130	16271-55313	SHAFT GOVERNOR	1				0.343	0.7546
140	16241-55392	HOLDER GOVERNOR GEAR	1				0.34	0.748
150	16271-55320	GEAR GOVERNOR	1				0.145	0.319
160	16241-55270	HOLDER GOV.WEIGHT	1				0.085	0.187
170	16271-55060	COMP.WEIGHT GOVERNOR	2				0.067	0.1474
180	16241-55260	SHAFT GOV. WEIGHT	2				0.013	0.0286
190	19484-55440	ROLLER	2				0.005	0.011
200	16241-55450	SLEEVE GOVERNOR	1				0.04	0.088
210	16241-55463	WASHER THRUST	1				0.005	0.011
220	08101-06304	BEARING BALL	1	<=2V0293			0.146	0.3212
220	16261-97320	BEARING BALL	1	>=2W0003	1		0.14	0.308
230	16271-55410	CIR CLIP GOV.SHAFT	1				0.005	0.011
240	16241-55554	SCREW SET	1				0.007	0.0154

silvernorn.co.uk

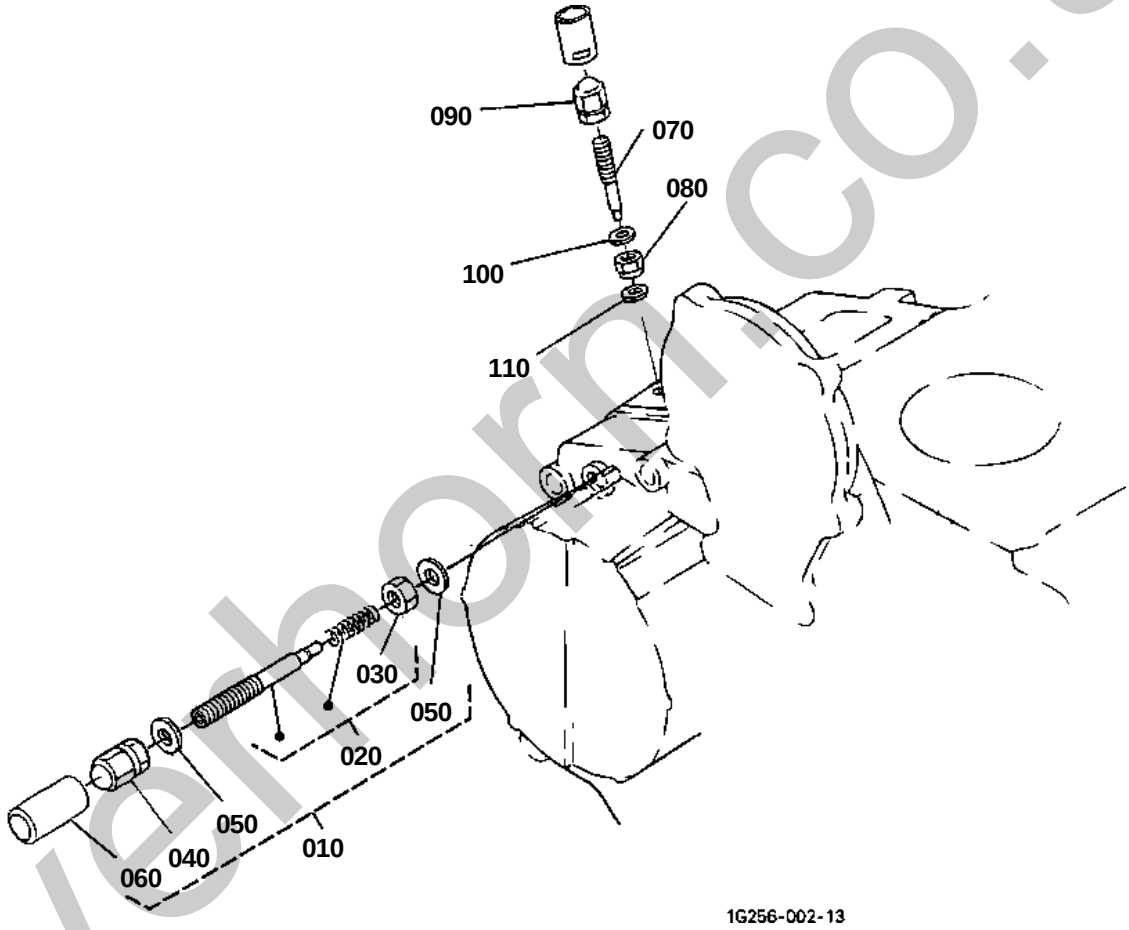

silverhorn.co.uk

OLD PARTS

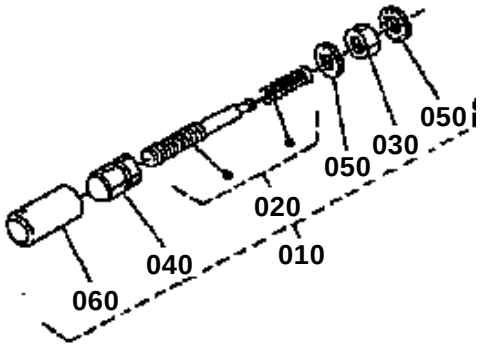

1G072-803-10

silverhorn.co.uk

IDLE APPARATUS

↔ Interchangeable; ≠ not interchangeable; ← new for old; → old for new

REF.No	Part No.	Description	Q'ty	S.No.	I/C	REMARKS	Weight (kgf)	Weight (lb)
010	16271-54090	APPARATUS FUEL LIMIT	1	<=4C9000			0.029	0.0638
010	16271-54093	APPARATUS IDLING	1	>=4E0001	¬		0.029	0.0638
020	16241-54102	ASSY BOLT ADJUSTING	1	<=4C9000			0.008	0.0176
020	16241-54103	ASSY BOLT ADJUSTMENT	1	>=4E0001	¬		0.008	0.0176
030	15841-92020	NUT	1				0.004	0.0088
040	15841-92330	NUT	1				0.006	0.0132
040	15852-92330	NUT	1		«		0.005	0.011
050	15601-96650	GASKET	2				0.001	0.0022
060	16221-54420	CAP	1				0.001	0.0022
070	16241-54120	BOLT ADJUSTING	1	<=4C9000			0.005	0.011
070	16241-54122	BOLT ADJUSTING	1	>=4E0001	¬		0.005	0.011
080	1G031-54210	NUT LOCK	1				0.003	0.0066
090	15841-92330	NUT	1				0.006	0.0132
090	15852-92330	NUT	1		«		0.005	0.011
100	15601-96650	GASKET	1				0.001	0.0022
110	1G031-96650	GASKET	1				0	0
110	1G021-96650	GASKET	1		«		0.001	0.0022

silverhorn.co.uk

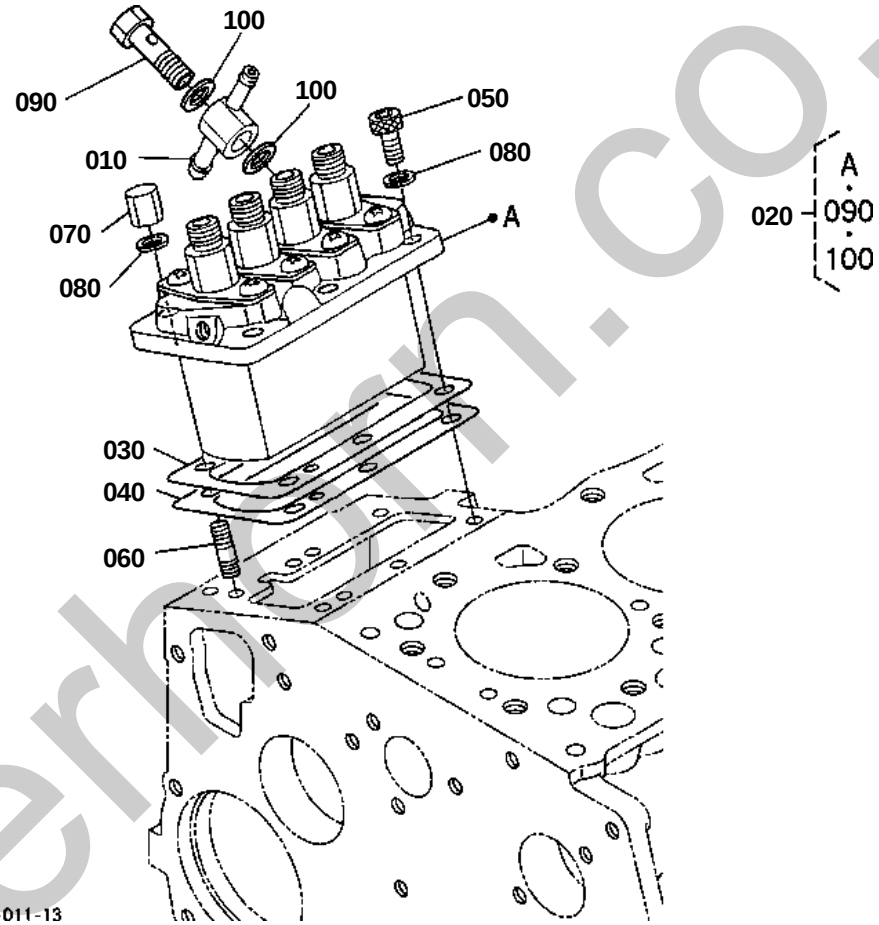

silverhorn.co.uk

↔ Interchangeable; ≠ not interchangeable; ← new for old; → old for new

REF.No	Part No.	Description	Q'ty	S.No.	I/C	REMARKS	Weight (kgf)	Weight (lb)
010	16271-95690	JOINT EYE	1				0.046	0.1012
020	16062-51010	ASSY PUMP INJECTION	1				1.38	3.036
030	16040-52092	SHIM INJECTION PUMP	1			0.20mm	0.004	0.0088
030	16040-52112	SHIM INJECTION PUMP	1			0.25mm	0.005	0.011
040	16040-52122	SHIM INJECTION PUMP	1			0.30mm	0.006	0.0132
050	01311-10620	BOLT HEX-SOC-HD	3				0.012	0.0264
060	15841-91500	STUD	3				0.02	0.044
070	15841-92320	NUT	3				0.01	0.022
080	04512-60060	WASHER SPRING	6				0.001	0.0022
090	16271-51320	SCREW HOLLOW	1				0.031	0.0682
100	15841-96650	GASKET	2				0.001	0.0022

silverhorn.co.uk

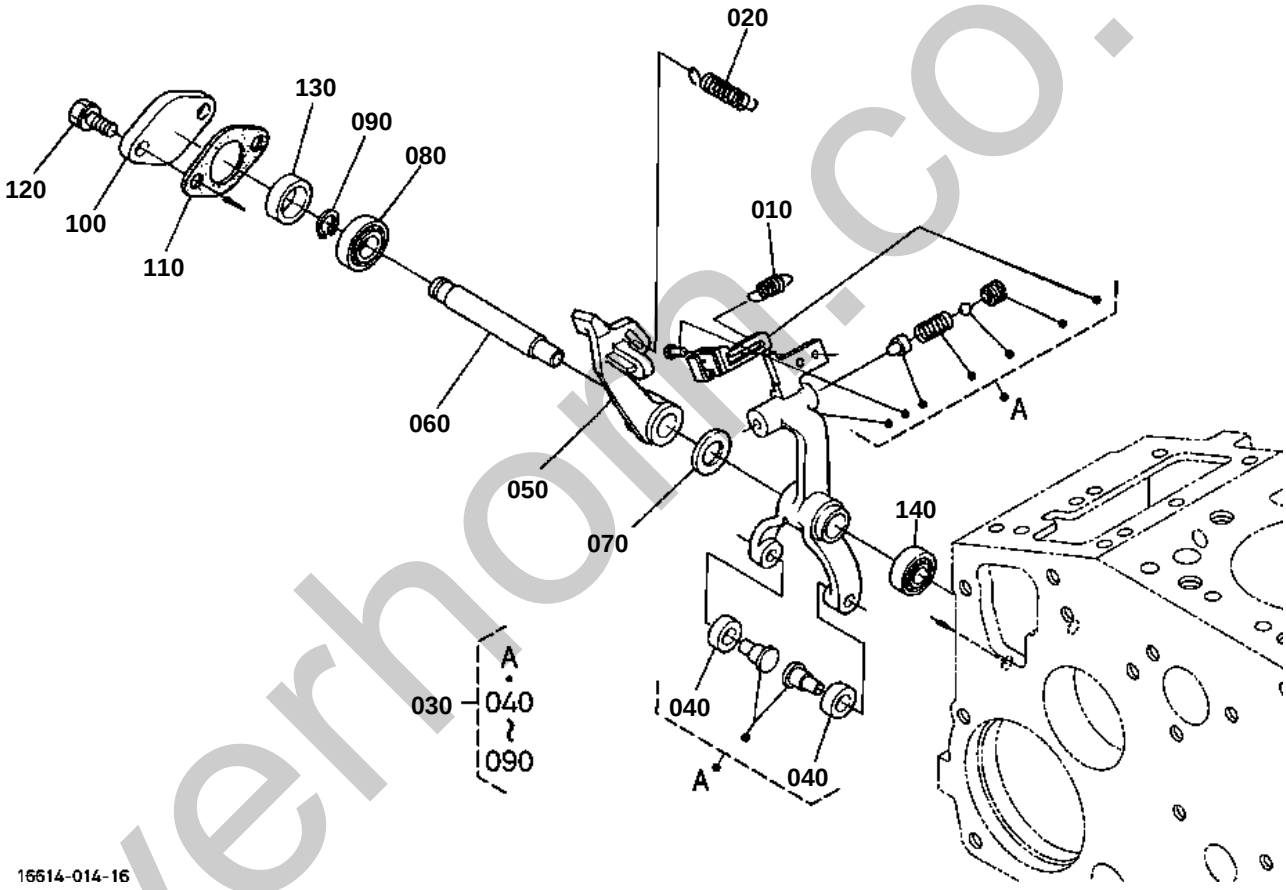

silverhorn.co.uk

↔ Interchangeable; ≠ not interchangeable; ← new for old; → old for new

REF.No	Part No.	Description	Q'ty	S.No.	I/C	REMARKS	Weight (kgf)	Weight (lb)
010	16271-56480	SPRING START	1				0.001	0.0022
020	1G043-56410	SPRING GOVERNOR	1				0.019	0.0418
030	16032-56055	ASSY LEVER FORK	1				0.26	0.572
040	19484-55440	ROLLER	2				0.005	0.011
050	16222-56133	LEVER FORK	1				0.06	0.132
060	16241-56153	SHAFT FORK LEVER	1				0.04	0.088
070	16241-94010	WASHER PLAIN	1				0.002	0.0044
080	16241-56330	BEARING MINIATURIZE	1				0.007	0.0154
090	04612-00090	CIR CLIP EXTERNAL	1				0.001	0.0022
100	16241-56250	COVER FORK LEV.SHAFT	1				0.013	0.0286
110	16299-56260	GASKET	1				0.002	0.0044
120	01023-50614	BOLT	2				0.005	0.011
130	16241-56210	COLLAR	1				0.008	0.0176
140	16241-56340	BEARING MINIATURIZE	1				0.007	0.0154

silverhorn.co.uk

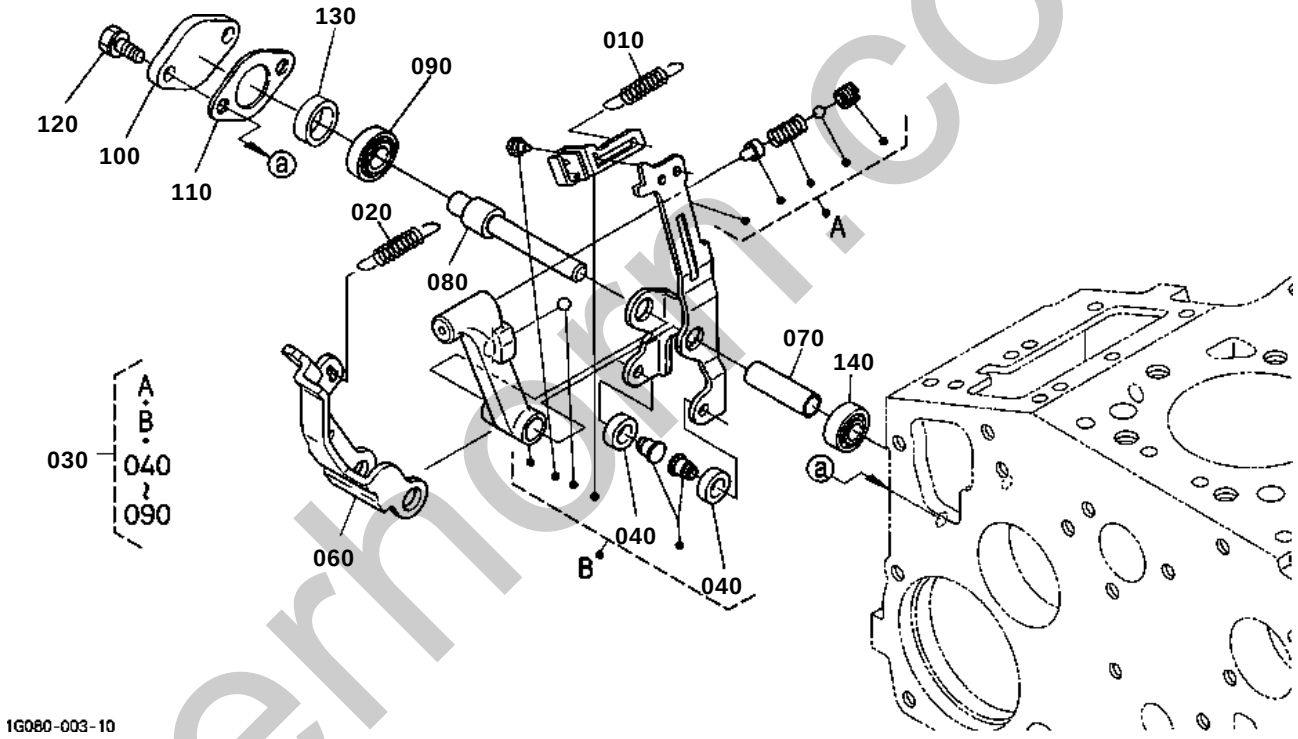

silvermoor.co.uk

↔ Interchangeable; ≠ not interchangeable; ← new for old; → old for new

REF.No	Part No.	Description	Q'ty	S.No.	I/C	REMARKS	Weight (kgf)	Weight (lb)
010	16271-56480	SPRING START	1				0.001	0.0022
020	1G043-56410	SPRING GOVERNOR	1				0.019	0.0418
030	16032-56010	ASSY LEVER FORK	1				0.25	0.55
040	19484-55440	ROLLER	2				0.005	0.011
050	99999-99999	BLANK	0				0	0
060	1G032-56130	LEVER FORK	1				0.08	0.176
070	1G032-56150	SHAFT FORK LEVER	1				0.007	0.0154
080	1G032-56470	SHAFT FORK LEVER	1				0.04	0.088
090	16241-56330	BEARING MINIATURIZE	1				0.007	0.0154
100	16241-56250	COVER FORK LEV.SHAFT	1				0.013	0.0286
110	16299-56260	GASKET	1				0.002	0.0044
120	01023-50614	BOLT	2				0.005	0.011
130	16241-56210	COLLAR	1				0.008	0.0176
140	16241-56340	BEARING MINIATURIZE	1				0.007	0.0154

silverhorn.co.uk

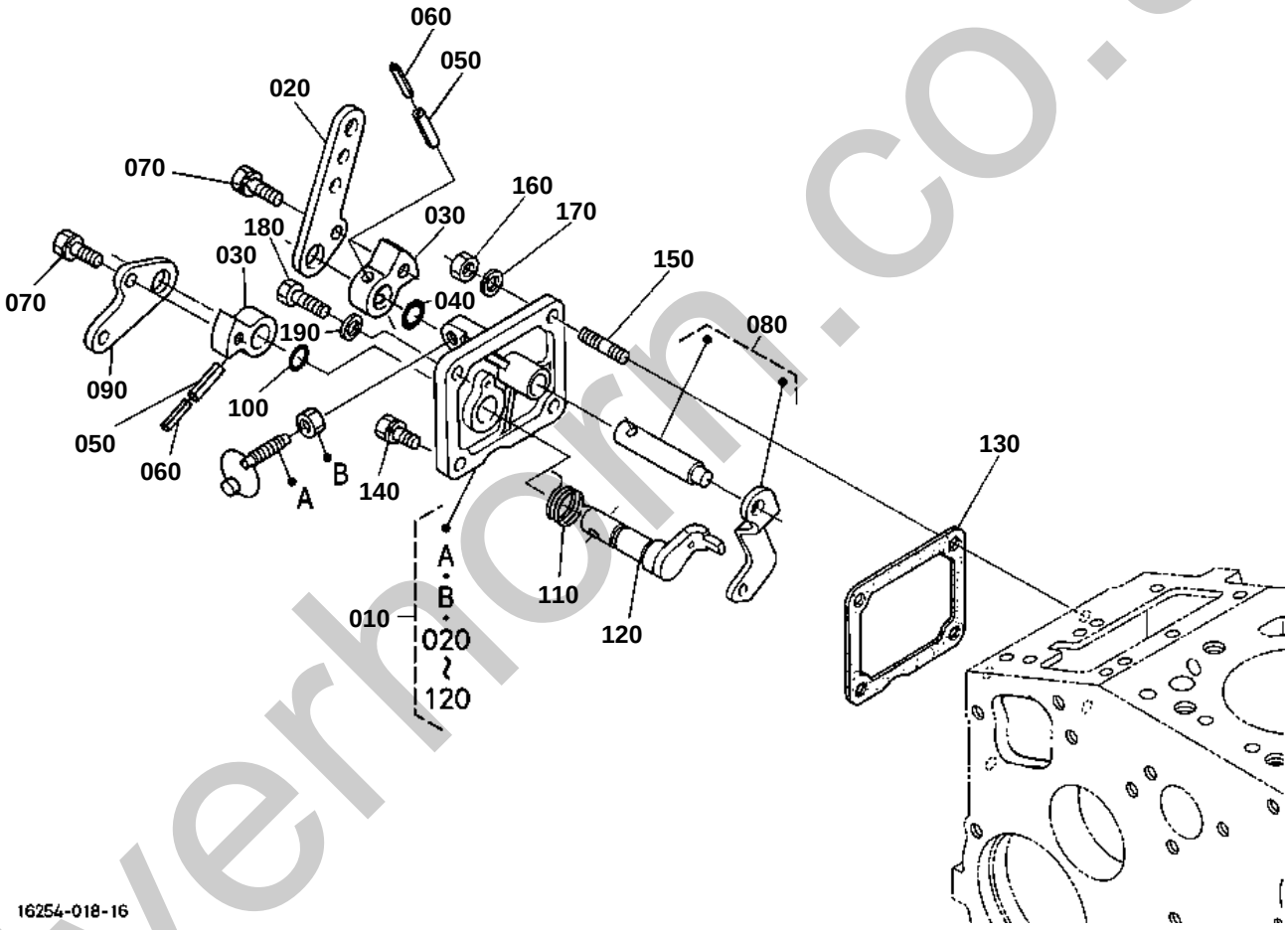

silverhorn.co.uk

SPEED CONTROL PLATE

↔ Interchangeable; ≠ not interchangeable; ← new for old; → old for new

REF.No	Part No.	Description	Q'ty	S.No.	I/C	REMARKS	Weight (kgf)	Weight (lb)
010	16205-57010	ASSY PLATE CONTROL	1				0.34	0.748
020	16205-57150	LEVER SPEED CONTROL	1				0.033	0.0726
030	16205-57160	LEVER SPEED CONTROL	2				0.03	0.066
040	04814-00100	O RING	1				0.001	0.0022
050	05411-00420	PIN SPRING	2				0.001	0.0022
060	05411-02520	PIN SPRING	2				0.001	0.0022
070	01023-50612	BOLT	2				0.005	0.011
080	16205-56020	COMP.LEVER GOVERNOR	1				0.02	0.044
090	16205-57720	LEVER ENGINE STOP	1				0.02	0.044
100	04814-10070	O RING	1				0.001	0.0022
110	16205-57510	SPRING RETURN	1				0.002	0.0044
120	16205-57740	COMP.LEVER STOP	1				0.046	0.1012
130	16264-57210	GASKET	1				0.002	0.0044
140	01023-50616	BOLT	1				0.005	0.011
150	16245-91540	STUD	2				0.005	0.011
160	02056-50060	NUT	2				0.002	0.0044
170	04512-60060	WASHER SPRING	2				0.001	0.0022
180	01053-50618	BOLT	1				0.006	0.0132
190	15601-96650	GASKET	1				0.001	0.0022

silverhorn.co.uk

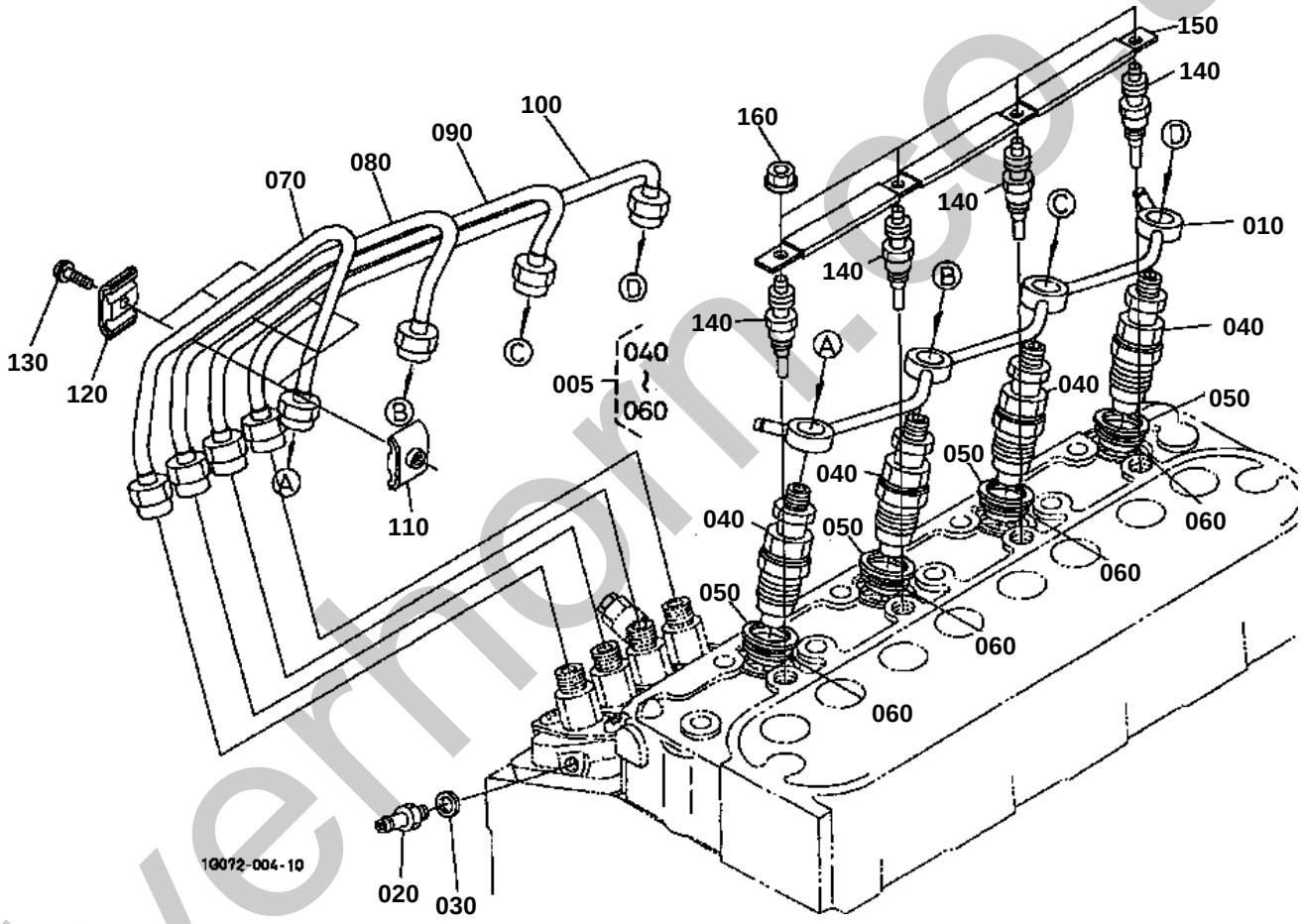

silverhorn.co.uk

NOZZLE HOLDER AND GLOW PLUG

S.No.;<=3Y9499

↔ Interchangeable; ≠ not interchangeable; ← new for old; → old for new

REF.No	Part No.	Description	Q'ty	S.No.	I/C	REMARKS	Weight (kgf)	Weight (lb)
005	16032-53900	KIT HOLDER NOZZLE	1				0.16	0.352
010	16271-42502	ASSY PIPE OVER FLOW	1				0.06	0.132
020	15841-51360	SCREW AIR BREEDER	1				0.008	0.0176
030	15601-96650	GASKET	1				0.001	0.0022
040	16032-53000	ASSY HOLDER NOZZLE	4				0.14	0.308
050	15841-53622	GASKET	4				0.002	0.0044
060	19077-53650	SEAL HEAT	4				0.005	0.011
070	16271-53712	PIPE INJECTION	1				0.12	0.264
080	16271-53722	PIPE INJECTION	1				0.12	0.264
090	16271-53732	PIPE INJECTION	1				0.118	0.2596
100	16271-53742	PIPE INJECTION	1				0.12	0.264
110	15841-53850	CLAMP PIPE	3				0.01	0.022
120	15841-53860	CLAMP PIPE	3				0.009	0.0198
130	03024-50520	SCREW WITH WASHER	3				0.004	0.0088
140	16851-65510	GLOW PLUG	4				0	0
150	16271-65560	CORD GLOW PLUG	1				0.1	0.22
160	02761-50040	NUT FLANGE	4				0.002	0.0044

silverhorn.co.uk

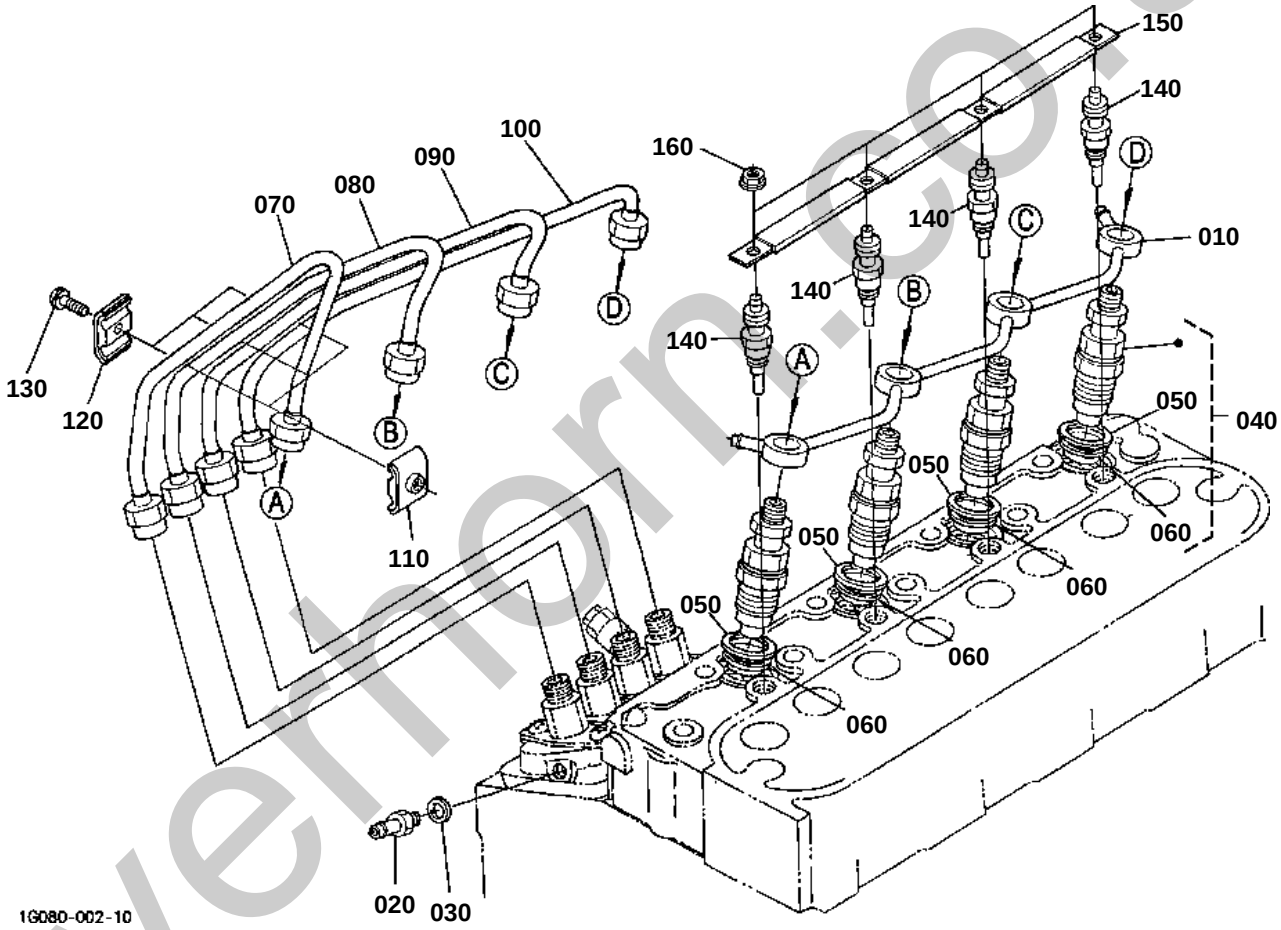

silverhorn.co.uk

NOZZLE HOLDER AND GLOW PLUG

S.No.;>=4A0001

↔ Interchangeable; ≠ not interchangeable; ← new for old; → old for new

REF.No	Part No.	Description	Q'ty	S.No.	I/C	REMARKS	Weight (kgf)	Weight (lb)
010	16271-42502	ASSY PIPE OVER FLOW	1				0.06	0.132
020	15841-51360	SCREW AIR BREEDER	1				0.008	0.0176
030	15601-96650	GASKET	1				0.001	0.0022
040	1G065-53900	KIT HOLDER NOZZLE	1				0.151	0.3322
050	15841-53622	GASKET	4				0.002	0.0044
060	19077-53650	SEAL HEAT	4				0.005	0.011
070	16271-53712	PIPE INJECTION	1				0.12	0.264
080	16271-53722	PIPE INJECTION	1				0.12	0.264
090	16271-53732	PIPE INJECTION	1				0.118	0.2596
100	16271-53742	PIPE INJECTION	1				0.12	0.264
110	15841-53850	CLAMP PIPE	3				0.01	0.022
120	15841-53860	CLAMP PIPE	3				0.009	0.0198
130	03024-50520	SCREW WITH WASHER	3				0.004	0.0088
140	16851-65510	GLOW PLUG	4				0	0
150	16271-65560	CORD GLOW PLUG	1				0.1	0.22
160	02761-50040	NUT FLANGE	4				0.002	0.0044

silverhorn.co.uk

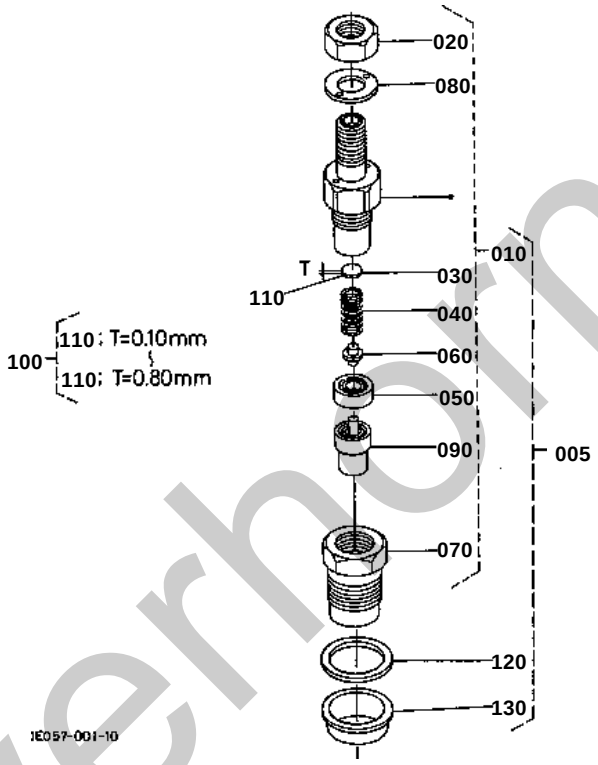

silverhorn.co.uk

NOZZLE HOLDER [COMPONENT PARTS]

S.No.;<=3Y9499

↔ Interchangeable; ≠ not interchangeable; ← new for old; → old for new

REF.No	Part No.	Description	Q'ty	S.No.	I/C	REMARKS	Weight (kgf)	Weight (lb)
005	16032-53900	KIT HOLDER NOZZLE	4				0.16	0.352
010	16032-53000	ASSY HOLDER NOZZLE	4				0.14	0.308
020	16032-92030	NUT	4				0.007	0.0154
030	16032-53230	WASHER ADJUSTING	4				0.001	0.0022
040	16032-53170	SPRING NOZZLE	4				0.007	0.0154
050	16032-53350	SPACER DISTANCE	4				0.02	0.044
060	16032-53160	PUSH ROD	4				0.001	0.0022
070	16032-53280	NUT NOZZLE	4				0.037	0.0814
080	16032-94040	WASHER PLAIN	4				0.002	0.0044
090	16032-53610	PIECE NOZZLE	4				0.021	0.0462
100	16032-98100	ASSY WASHER ADJUST	4			OPTION	0.016	0.0352
110	16032-98500	WASHER ADJUSTING	4			0.10mm	0.001	0.0022
110	16032-98510	WASHER ADJUSTING	4			0.20mm	0.001	0.0022
110	16032-98520	WASHER ADJUSTING	4			0.30mm	0.001	0.0022
110	16032-98530	WASHER ADJUSTING	4			0.40mm	0.001	0.0022
110	16032-98540	WASHER ADJUSTING	4			0.50mm	0.001	0.0022
110	16032-98550	WASHER ADJUSTING	4			0.52mm	0.001	0.0022
110	16032-98560	WASHER ADJUSTING	4			0.54mm	0.001	0.0022
110	16032-98570	WASHER ADJUSTING	4			0.56mm	0.001	0.0022
110	16032-98580	WASHER ADJUSTING	4			0.58mm	0.001	0.0022
110	16032-98590	WASHER ADJUSTING	4			0.80mm	0.001	0.0022
120	15841-53622	GASKET	4				0.002	0.0044
130	19077-53650	SEAL HEAT	4				0.005	0.011

silverhorn.co.uk

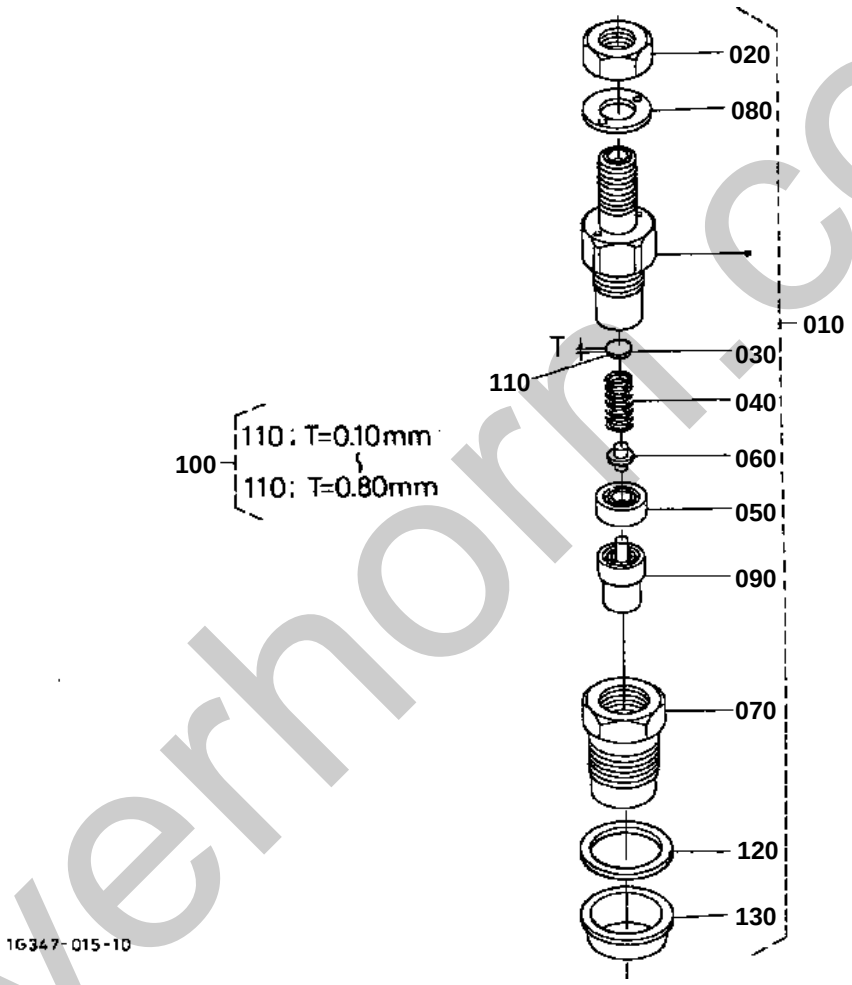

silverhorn.co.uk

NOZZLE HOLDER [COMPONENT PARTS]

S.No.;>=4A0001

↔ Interchangeable; ≠ not interchangeable; ← new for old; → old for new

REF.No	Part No.	Description	Q'ty	S.No.	I/C	REMARKS	Weight (kgf)	Weight (lb)
010	1G065-53900	KIT HOLDER NOZZLE	4				0.151	0.3322
020	16032-92030	NUT	4				0.007	0.0154
030	16032-53230	WASHER ADJUSTING	4				0.001	0.0022
040	16032-53170	SPRING NOZZLE	4				0.007	0.0154
050	16032-53350	SPACER DISTANCE	4				0.02	0.044
060	16032-53160	PUSH ROD	4				0.001	0.0022
070	16032-53280	NUT NOZZLE	4				0.037	0.0814
080	16032-94040	WASHER PLAIN	4				0.002	0.0044
090	1G065-53610	PIECE NOZZLE	4				0.02	0.044
100	16032-98100	ASSY WASHER ADJUST	4			OPTION	0.016	0.0352
110	16032-98500	WASHER ADJUSTING	4			0.10mm	0.001	0.0022
110	16032-98510	WASHER ADJUSTING	4			0.20mm	0.001	0.0022
110	16032-98520	WASHER ADJUSTING	4			0.30mm	0.001	0.0022
110	16032-98530	WASHER ADJUSTING	4			0.40mm	0.001	0.0022
110	16032-98540	WASHER ADJUSTING	4			0.50mm	0.001	0.0022
110	16032-98550	WASHER ADJUSTING	4			0.52mm	0.001	0.0022
110	16032-98560	WASHER ADJUSTING	4			0.54mm	0.001	0.0022
110	16032-98570	WASHER ADJUSTING	4			0.56mm	0.001	0.0022
110	16032-98580	WASHER ADJUSTING	4			0.58mm	0.001	0.0022
110	16032-98590	WASHER ADJUSTING	4			0.80mm	0.001	0.0022
120	15841-53622	GASKET	4				0.002	0.0044
130	19077-53650	SEAL HEAT	4				0.005	0.011

silverhorn.co.uk

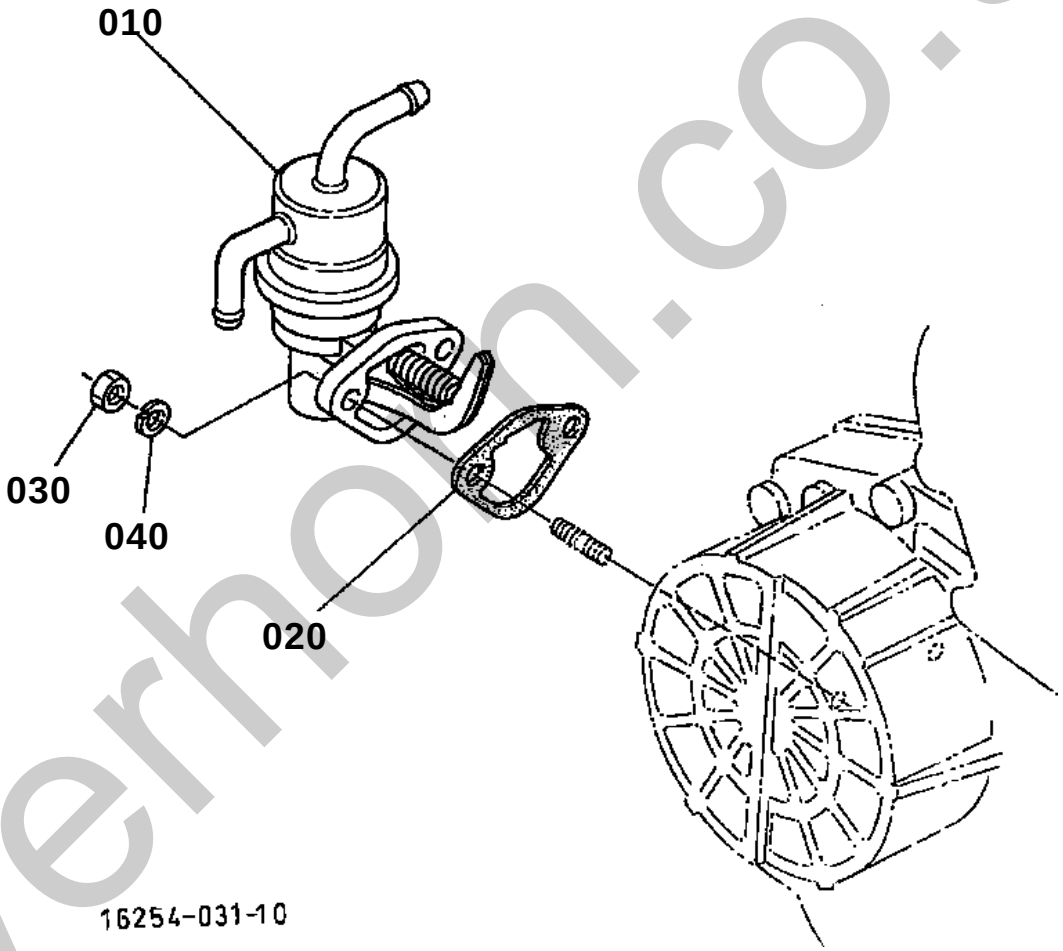

silverhorn.co.uk

FUEL PUMP(MECHANICAL)

↔ Interchangeable; ≠ not interchangeable; ← new for old; → old for new

REF.No	Part No.	Description	Q'ty	S.No.	I/C	REMARKS	Weight (kgf)	Weight (lb)
010	16241-52032	ASSY PUMP FUEL	1				0.13	0.286
020	16264-52140	GASKET FUEL PUMP	1				0.001	0.0022
030	02056-50060	NUT	2				0.002	0.0044
040	04512-60060	WASHER SPRING	2				0.001	0.0022

silverhorn.co.uk

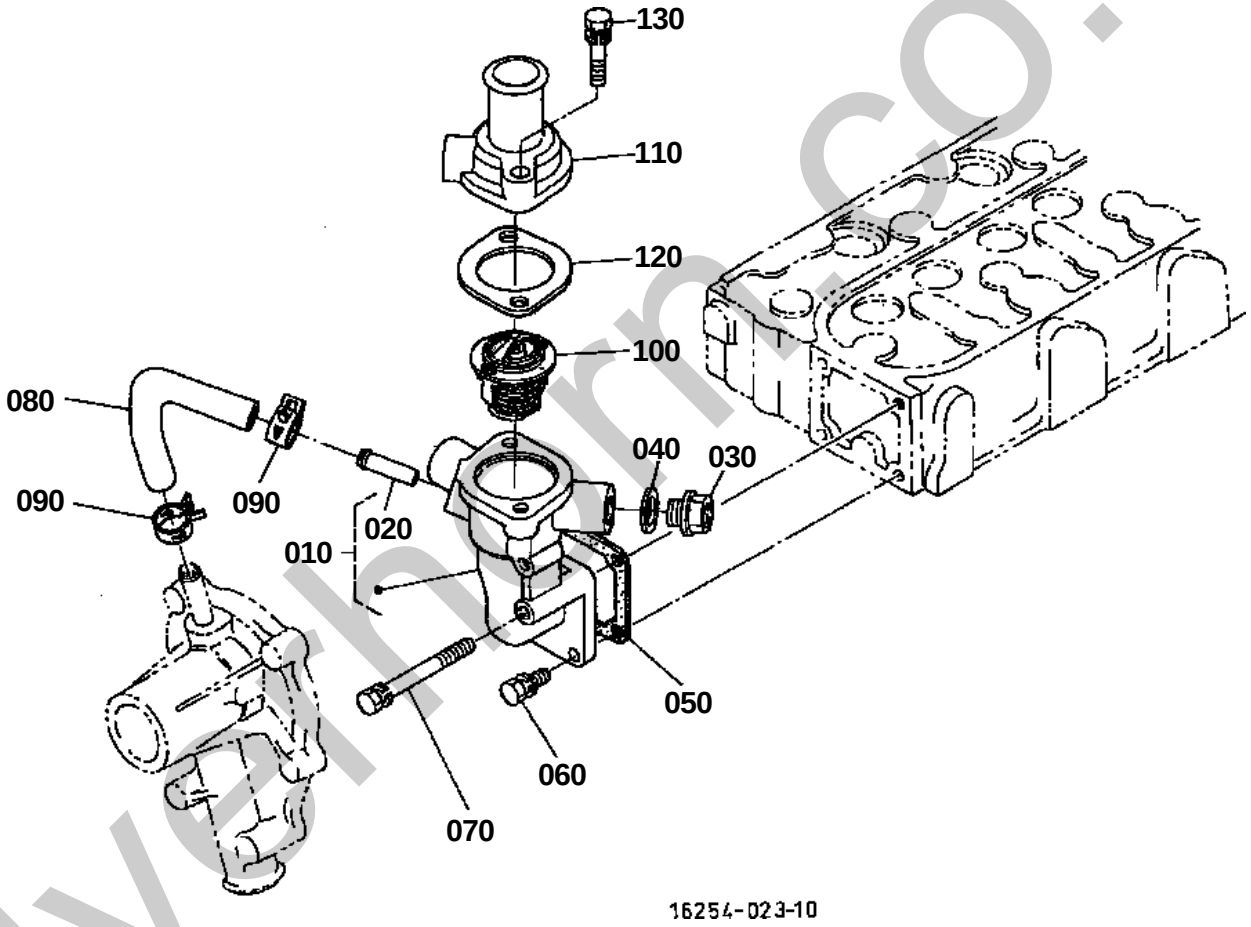

silverthorn.co.uk

WATER FLANGE AND THERMOSTAT

↔ Interchangeable; ≠ not interchangeable; ← new for old; → old for new

REF.No	Part No.	Description	Q'ty	S.No.	I/C	REMARKS	Weight (kgf)	Weight (lb)
010	16180-72700	COMP FLANGE WATER	1				0.265	0.583
020	16241-73370	PIPE WATER RETURN	1				0.007	0.0154
030	06311-55030	PLUG	1				0.05	0.11
040	16261-96710	GASKET	1				0.002	0.0044
050	16264-72920	GASKET WATER FLANGE	1				0.001	0.0022
060	01023-50616	BOLT	3				0.005	0.011
070	01023-50655	BOLT	1				0.012	0.0264
080	16241-73350	PIPE WATER RETURN	1				0.015	0.033
090	16241-73360	BAND PIPE	2				0.003	0.0066
100	15321-73014	ASSY THERMOSTAT	1				0.07	0.154
110	16219-73260	COVER THERMOSTAT	1				0.094	0.2068
120	16221-73270	GASKET THERMOSTAT	1				0.01	0.022
130	01123-50835	BOLT	2				0.02	0.044

silverhorn.co.uk

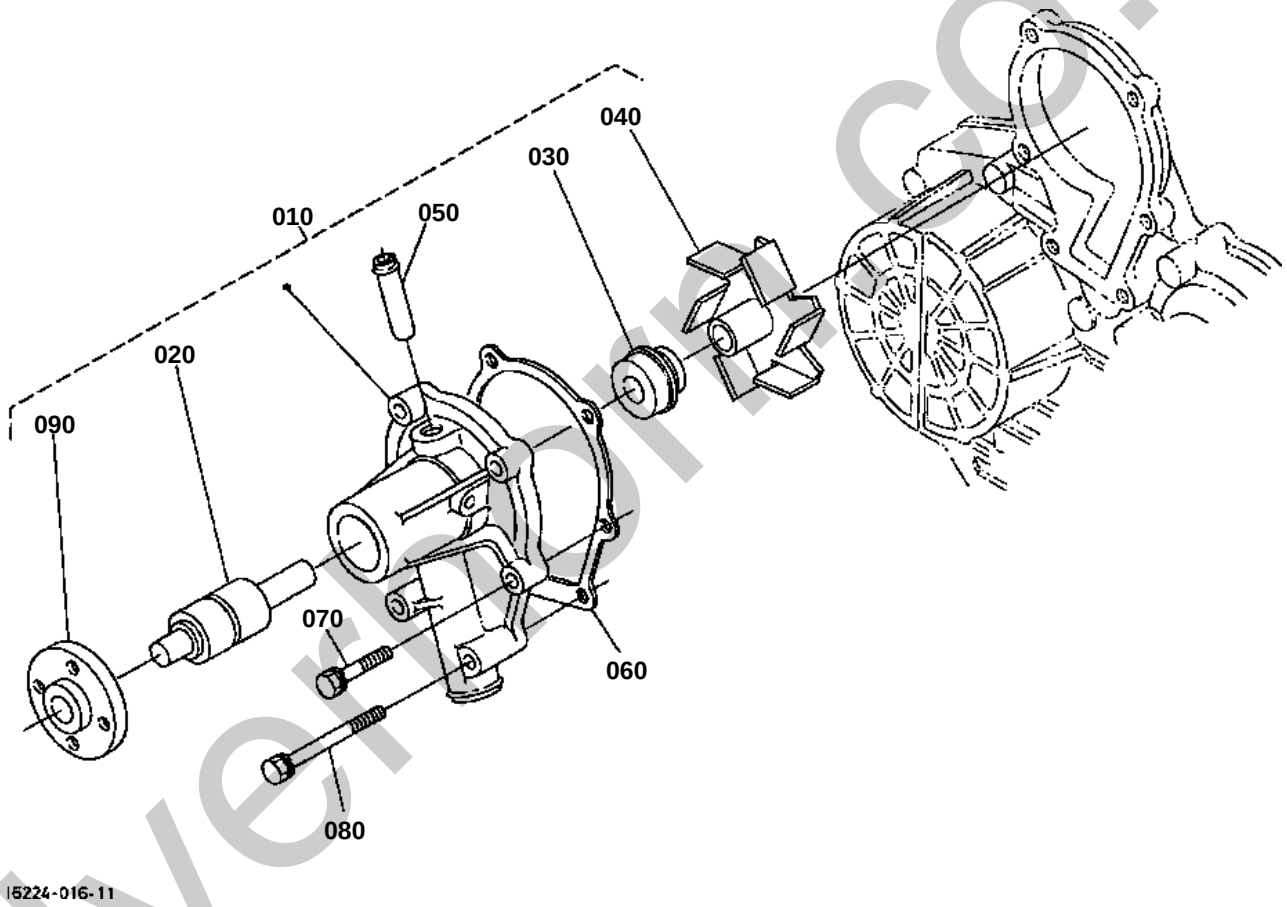

silverbirch.co.uk

WATER PUMP

↔ Interchangeable; ≠ not interchangeable; ← new for old; → old for new

REF.No	Part No.	Description	Q'ty	S.No.	I/C	REMARKS	Weight (kgf)	Weight (lb)
010	16251-73034	ASSY PUMP WATER	1				0.8	1.76
020	16259-73552	BEARING	1				0.21	0.462
030	1G642-73050	ASSY SEAL MECHANICAL	1				0.03	0.066
040	16259-73512	IMPELLER WATER PUMP	1				0.09	0.198
050	16241-73340	PIPE WATER RETURN	1				0.006	0.0132
060	16239-73430	GASKET WATER PUMP	1				0.007	0.0154
070	01023-50630	BOLT	4				0.008	0.0176
080	01023-50685	BOLT	2				0.018	0.0396
090	16259-73520	FLANGE WATER PUMP	1				0.15	0.33

silverhorn.co.uk

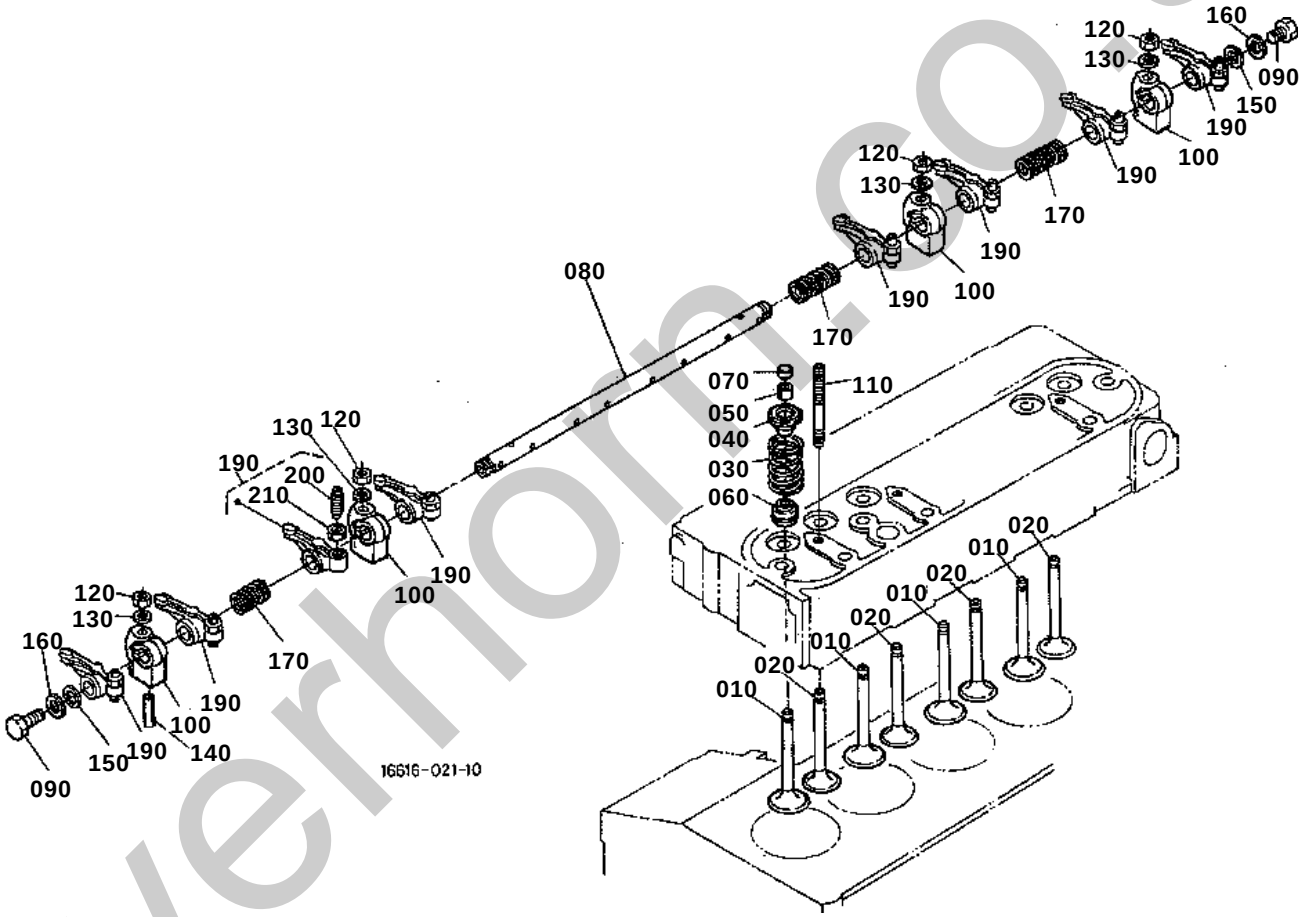

silverhorn.co.uk

VALVE AND ROCKER ARM

↔ Interchangeable; ≠ not interchangeable; ← new for old; → old for new

REF.No	Part No.	Description	Q'ty	S.No.	I/C	REMARKS	Weight (kgf)	Weight (lb)
010	16241-13110	VALVE INLET	4				0.005	0.011
020	16241-13120	VALVE EXHAUST	4				0.045	0.099
030	16271-13240	SPRING VALVE	8				0.015	0.033
040	16241-13330	RETAINER VALVE SP.	8				0	0
040	16261-13330	RETAINER SPRING	8		«		0.016	0.0352
050	15261-13360	COLLET VALVE SPRING	8			SET	0.001	0.0022
060	1C010-13150	SEAL VALVE STEM	8				0.002	0.0044
070	16241-13280	CAP VALVE	8				0.005	0.011
080	16241-14264	SHAFT ROCKER ARM	1				0.22	0.484
090	01023-50610	BOLT	2				0.005	0.011
100	16241-14350	BRACKET ROCKER ARM	4				0.04	0.088
110	16241-14410	STUD	4				0.022	0.0484
120	15261-92010	NUT	4				0.005	0.011
130	15261-94010	WASHER PLAIN	4				0.002	0.0044
140	05411-00428	PIN SPRING	1				0.002	0.0044
150	16241-14430	WASHER R-ARM.SHAFT	2				0.002	0.0044
160	15841-94022	WASHER PLAIN	2				0.005	0.011
170	16241-14310	SPRING ROCKER ARM	3				0.004	0.0088
180	99999-99999	BLANK	0				0	0
190	16241-14032	ASSY ROCKER ARM	8				0.052	0.1144
200	16241-14230	SCREW ADJUSTING	8				0.008	0.0176
210	16241-14240	NUT	8				0.004	0.0088

silverhorn.co.uk

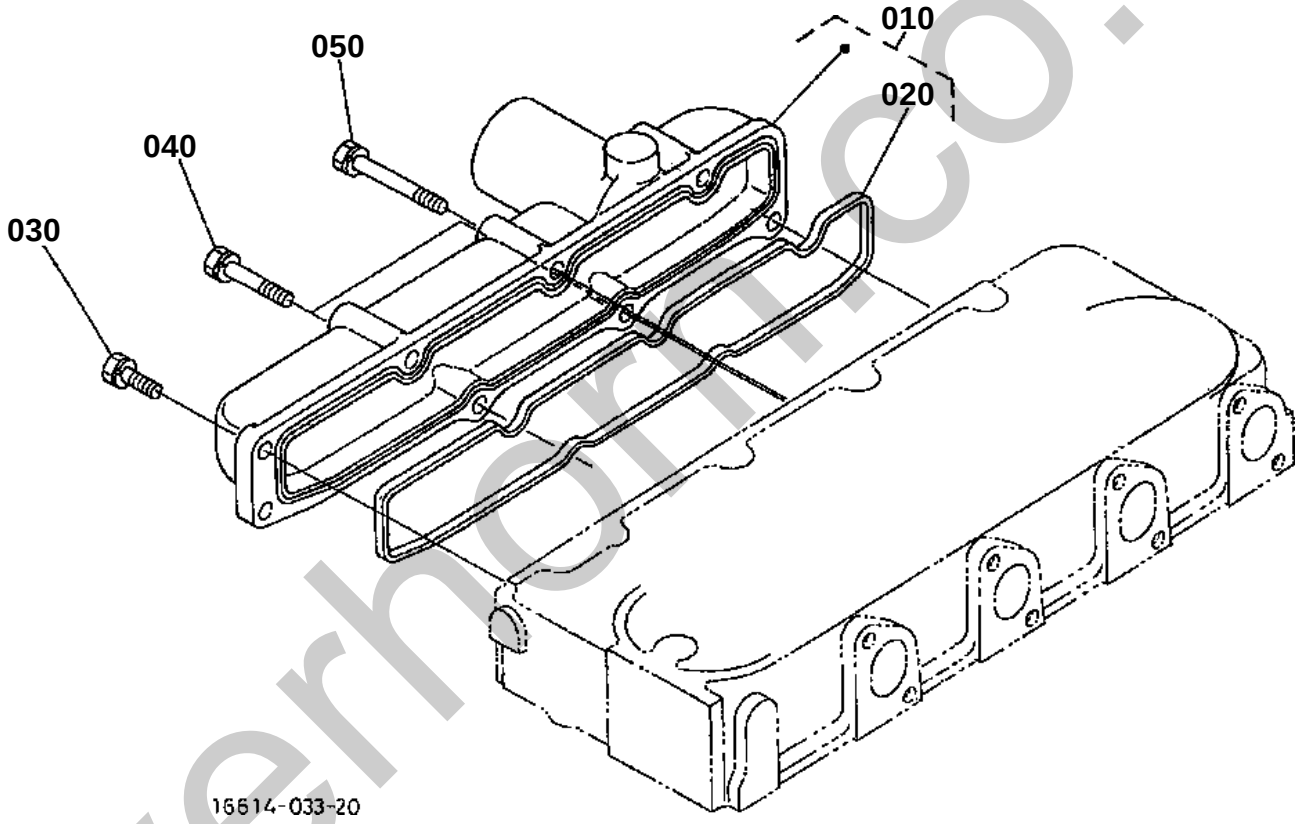

silverhorn.co.uk

INLET MANIFOLD

S.No.;<=3Y9499

↔ Interchangeable; ≠ not interchangeable; ← new for old; → old for new

REF.No	Part No.	Description	Q'ty	S.No.	I/C	REMARKS	Weight (kgf)	Weight (lb)
010	16271-11770	ASSY MANIFOLD INLET	1				0.39	0.858
020	16241-11820	GASKET IN-MANIFOLD	1				0.01	0.022
030	01023-50618	BOLT	3				0.006	0.0132
040	01023-50630	BOLT	2				0.008	0.0176
050	01023-60650	BOLT	3				0.015	0.033

silverhorn.co.uk

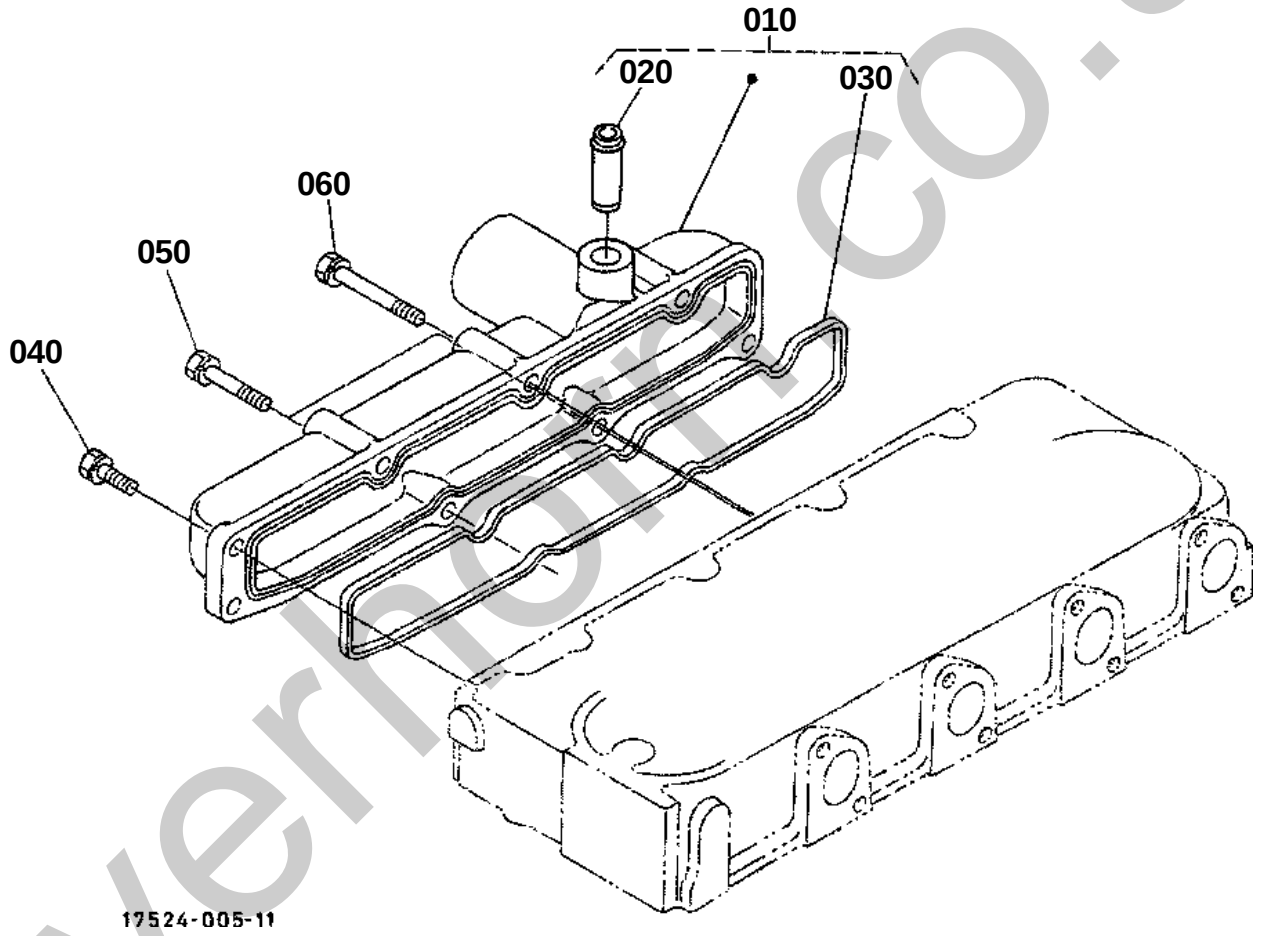

silverhorn.co.uk

INLET MANIFOLD

S.No.;>=4A0001

↔ Interchangeable; ≠ not interchangeable; ← new for old; → old for new

REF.No	Part No.	Description	Q'ty	S.No.	I/C	REMARKS	Weight (kgf)	Weight (lb)
010	16259-11772	ASSY MANIFOLD INLET	1				0.4	0.88
020	16241-05550	JOINT BREATHER PIPE	1				0.02	0.044
030	16241-11820	GASKET IN-MANIFOLD	1				0.01	0.022
040	01023-50618	BOLT	3				0.006	0.0132
050	01023-50630	BOLT	2				0.008	0.0176
060	01023-60650	BOLT	3				0.015	0.033

silverhorn.co.uk

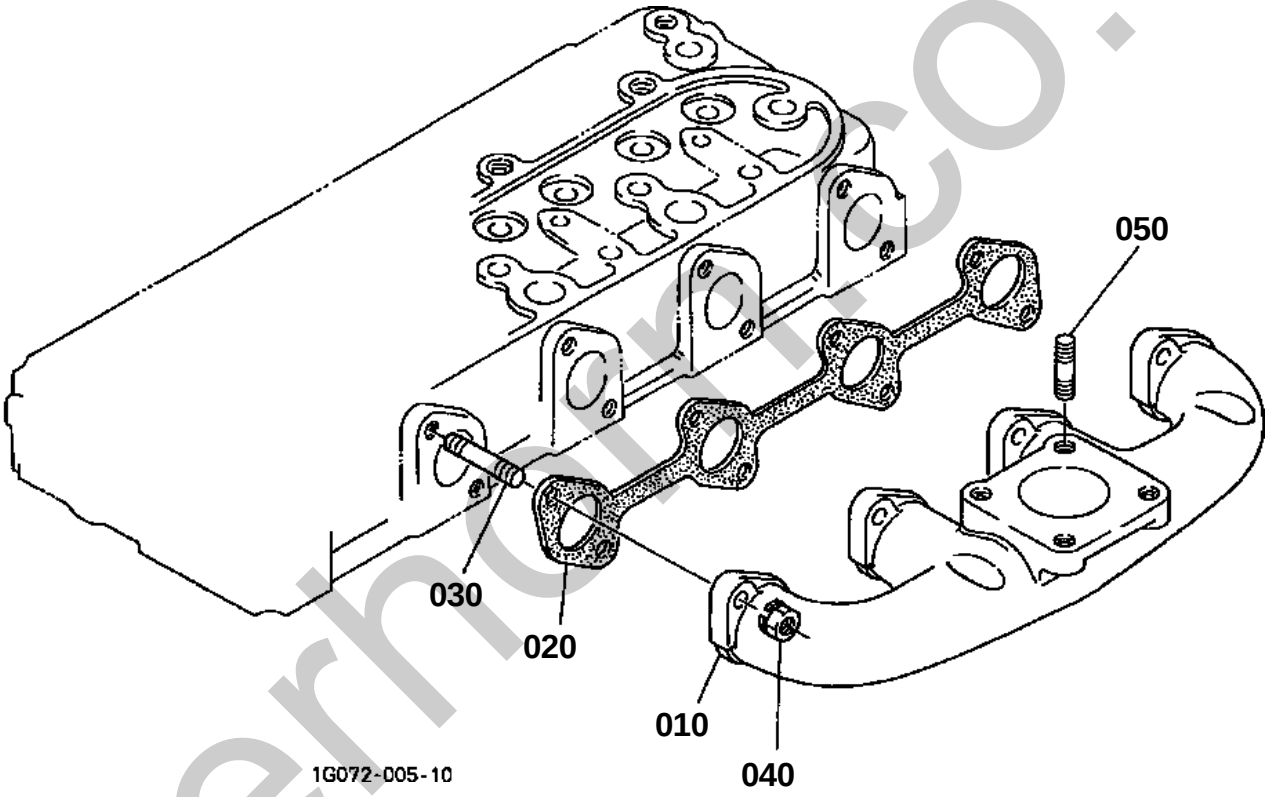

silverhart.co.uk

EXHAUST MANIFOLD

↔ Interchangeable; ≠ not interchangeable; ← new for old; → old for new

REF.No	Part No.	Description	Q'ty	S.No.	I/C	REMARKS	Weight (kgf)	Weight (lb)
010	16285-12310	MANIFOLD EXHAUST	1				2.1	4.62
020	16299-12360	GASKET EX-MANIFOLD	1				0.02	0.044
030	16241-91490	STUD	8				0.005	0.011
040	16271-92010	NUT	8				0.005	0.011
050	01513-50818	STUD	4				0.009	0.0198

silverhorn.co.uk

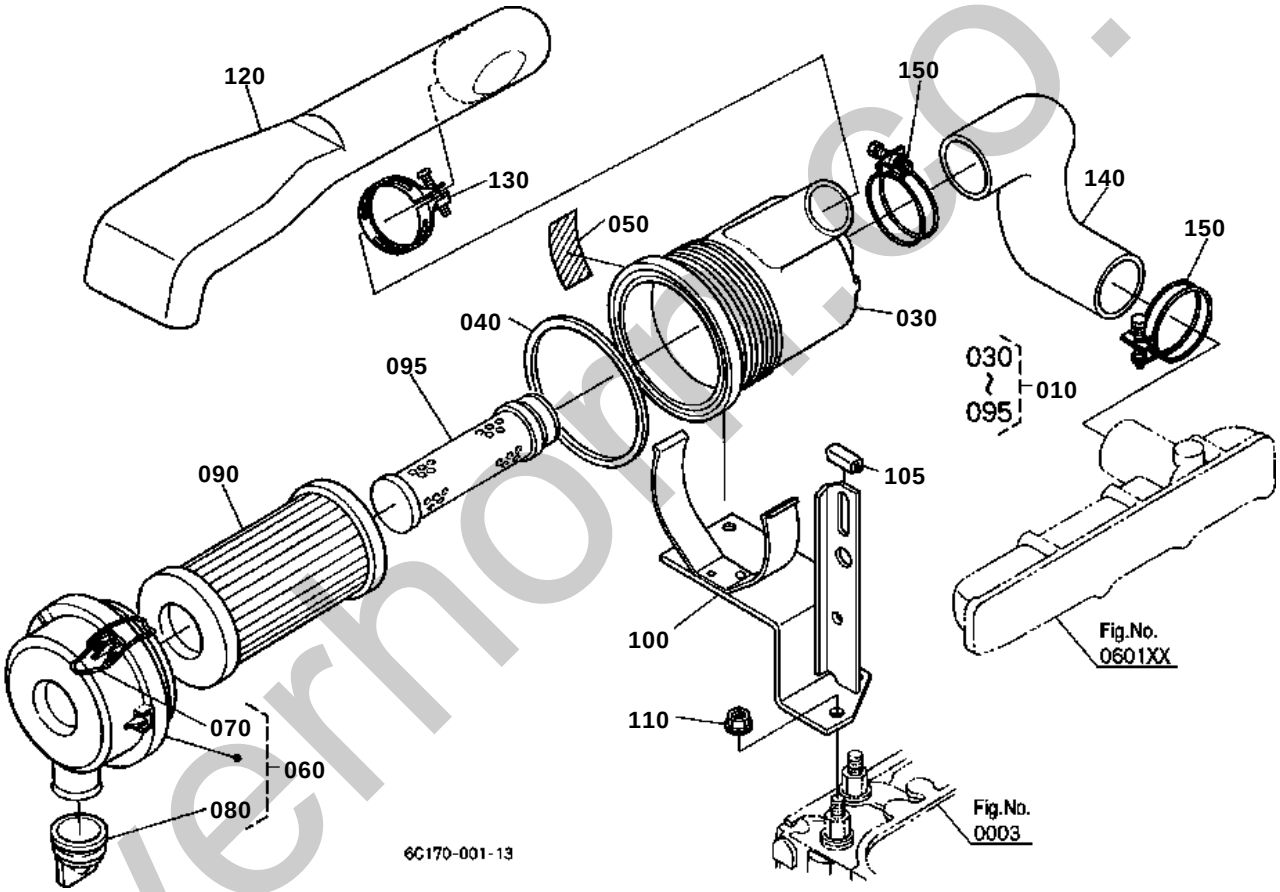

silverhome.co.uk

AIR CLEANER

↔ Interchangeable; ≠ not interchangeable; ← new for old; → old for new

REF.No	Part No.	Description	Q'ty	S.No.	I/C	REMARKS	Weight (kgf)	Weight (lb)
010	6C095-58200	ASSY CLEANER AIR	1				0.66	1.452
020	99999-99999	BLANK	0				0	0
030	6A100-82520	BODY AIR CLEANER	1				0.23	0.506
040	6A100-82530	GASKET	1				0.03	0.066
050	32721-58282	LABEL CAUTION	1				0.001	0.0022
060	6A100-82550	ASSY COVER A/C	1				0.179	0.3938
070	6A100-82570	SPRING	2				0.005	0.011
080	67980-82580	VALVE UNLOADER	1				0.011	0.0242
090	6A100-82630	ASSY ELEMENT	1			NOT SALE	0.3	0.66
090	6C060-99410	ASSY ELEMENT	1		¬		0.3	0.66
095	32721-58242	ELEMENT INNER	1				0.1	0.22
100	6C070-58233	BRACKET AIR CLEANER	1				0.64	1.408
105	6C070-58240	CUSHION	1				0.001	0.0022
110	02783-50100	NUT FLANGE	2				0.01	0.022
120	6C080-58250	HOSE INLET	1				0.103	0.2266
130	15261-11720	BAND PIPE	1				0.03	0.066
140	6C070-58260	HOSE INLET	1				0.29	0.638
150	67955-58260	BAND AIR CLEANER	2				0.028	0.0616

silverhorn.co.uk

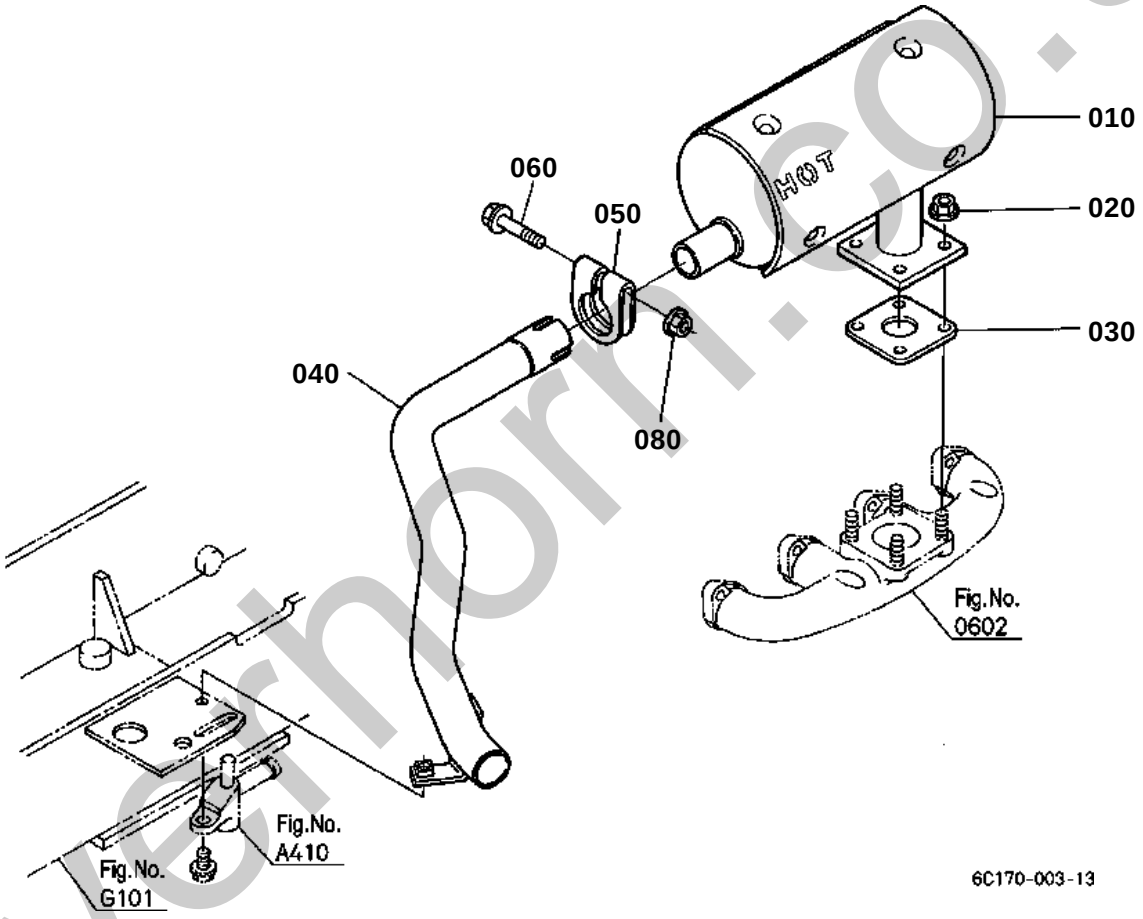

silverhorn.co.uk

MUFFLER

↔ Interchangeable; ≠ not interchangeable; ← new for old; → old for new

REF.No	Part No.	Description	Q'ty	S.No.	I/C	REMARKS	Weight (kgf)	Weight (lb)
010	6C040-58404	COMP.MUFFLER	1				2.62	5.764
020	02121-50080	NUT	4				0.01	0.022
030	15263-12370	GASKET MUFFLER NA	1				0.015	0.033
040	6C070-58420	PIPE EXHAUST	1				0.51	1.122
050	15221-12433	CLAMP MUFFLER PIPE	1				0.05	0.11
060	01754-50855	BOLT FLANGE	1				0.02	0.044
070	99999-99999	BLANK	0				0	0
080	02121-50080	NUT	1				0.01	0.022

silverhorn.co.uk

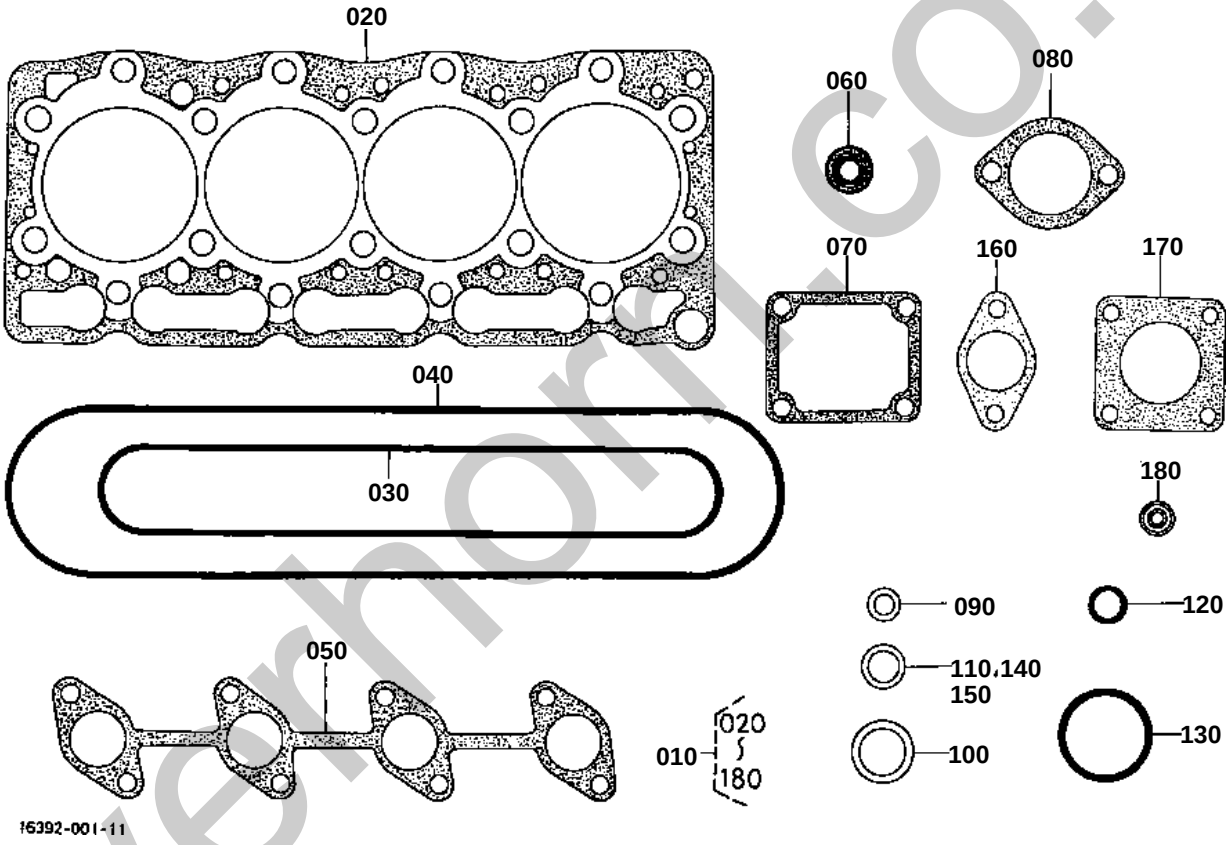

silverhorn.co.uk

UPPER GASKET KIT

S.No.;<=4A9508

↔ Interchangeable; ≠ not interchangeable; ← new for old; → old for new

REF.No	Part No.	Description	Q'ty	S.No.	I/C	REMARKS	Weight (kgf)	Weight (lb)
010	07916-27305	KIT GASKET UPPER	1				0.28	0.616
020	16292-03310	GASKET CYLINDER HEAD	1				0.09	0.198
030	16241-11820	GASKET IN-MANIFOLD	1				0.01	0.022
040	16241-14520	GASKET HEAD COVER	1				0.012	0.0264
050	16299-12360	GASKET EX-MANIFOLD	1				0.02	0.044
060	1C010-13150	SEAL VALVE STEM	8				0.002	0.0044
070	16264-72920	GASKET WATER FLANGE	1				0.001	0.0022
080	16221-73270	GASKET THERMOSTAT	1				0.01	0.022
090	15601-96650	GASKET	1				0.001	0.0022
100	15841-53622	GASKET	4				0.002	0.0044
110	15951-96660	GASKET	4				0.001	0.0022
120	15221-33700	O RING	1			OUT OF USE	0.001	0.0022
130	04814-50300	O RING	1				0.001	0.0022
140	16261-96710	GASKET	1				0.002	0.0044
150	15841-96650	GASKET	2				0.001	0.0022
160	15313-12370	GASKET NA	1			OUT OF USE	0.008	0.0176
170	15263-12370	GASKET MUFFLER NA	1				0.015	0.033
180	19077-53650	SEAL HEAT	4				0.005	0.011

silverhorn.co.uk

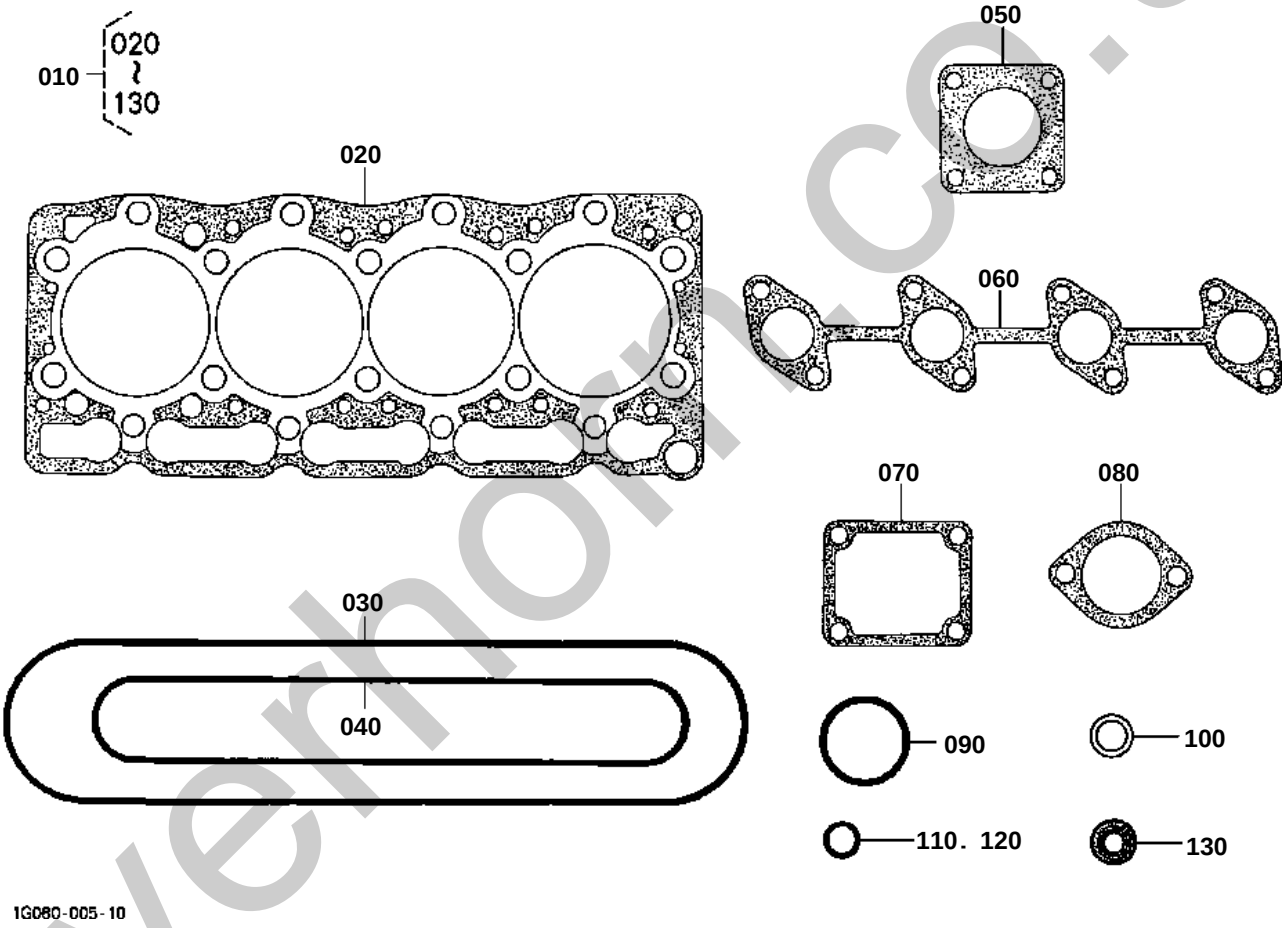

silverthorn.co.uk

UPPER GASKET KIT
S.No.;>=4C0001

↔ Interchangeable; ≠ not interchangeable; ← new for old; → old for new

REF.No	Part No.	Description	Q'ty	S.No.	I/C	REMARKS	Weight (kgf)	Weight (lb)
010	1G089-99350	KIT GASKET UPPER	1				0.379	0.8338
020	16394-03310	GASKET CYL.HEAD	1				0.2	0.44
030	16241-14520	GASKET HEAD COVER	1				0.012	0.0264
040	16241-11820	GASKET IN-MANIFOLD	1				0.01	0.022
050	15263-12370	GASKET MUFFLER NA	1				0.015	0.033
060	16299-12360	GASKET EX-MANIFOLD	1				0.02	0.044
070	16264-72920	GASKET WATER FLANGE	1				0.001	0.0022
080	16221-73270	GASKET THERMOSTAT	1				0.01	0.022
090	04814-50300	O RING	1				0.001	0.0022
100	15951-96660	GASKET	4				0.001	0.0022
110	04724-00100	GASKET	1				0.001	0.0022
120	04724-00120	GASKET	1				0.002	0.0044
130	1C010-13150	SEAL VALVE STEM	8				0.002	0.0044

silverhorn.co.uk

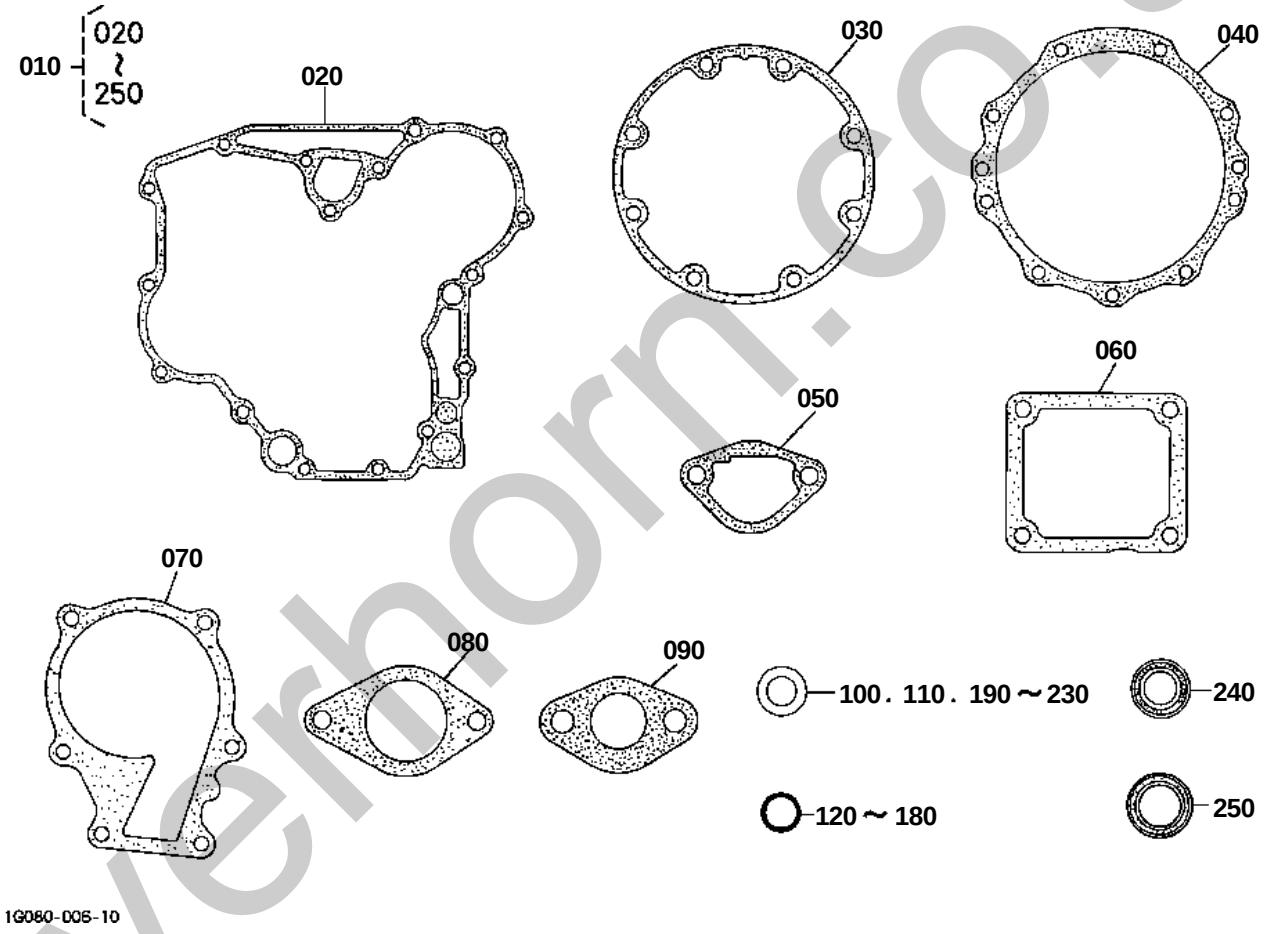

silverhorn.co.uk

LOWER GASKET KIT

↔ Interchangeable; ≠ not interchangeable; ← new for old; → old for new

REF.No	Part No.	Description	Q'ty	S.No.	I/C	REMARKS	Weight (kgf)	Weight (lb)
010	1G089-99360	KIT GASKET LOWER	1				0.204	0.4488
020	16264-04130	GASKET GEAR CASE	1				0.01	0.022
030	16264-04360	GASKET BRG.CASE	1				0.002	0.0044
040	16264-04820	GASKET	1				0.008	0.0176
050	16264-52140	GASKET FUEL PUMP	1				0.001	0.0022
060	16264-57210	GASKET	1				0.002	0.0044
070	16239-73430	GASKET WATER PUMP	1				0.007	0.0154
080	16264-88130	GASKET H/METER UNIT	1				0.002	0.0044
090	16299-56260	GASKET	1				0.002	0.0044
100	15021-33660	GASKET	1				0.001	0.0022
110	04724-00130	GASKET	1			OUT OF USE	0.003	0.0066
120	04814-50600	O RING	1			OUT OF USE	0.002	0.0044
130	04814-10070	O RING	1				0.001	0.0022
140	04814-06100	RING	2			OUT OF USE	0.003	0.0066
150	04814-00100	O RING	1				0.001	0.0022
160	04814-00150	RING	2			OUT OF USE	0.001	0.0022
170	04814-10280	RING	1				0.001	0.0022
180	04814-00160	O RING	1				0.001	0.0022
190	15601-96650	GASKET	5				0.001	0.0022
200	15841-96650	GASKET	2				0.001	0.0022
210	15471-96650	GASKET	2				0.002	0.0044
220	15841-96660	GASKET	1			OUT OF USE	0.001	0.0022
230	15841-53622	GASKET	4				0.002	0.0044
240	16241-04212	SEAL OIL	1				0.012	0.0264
250	16271-04460	SEAL OIL	1				0.04	0.088

silverhorn.co.uk

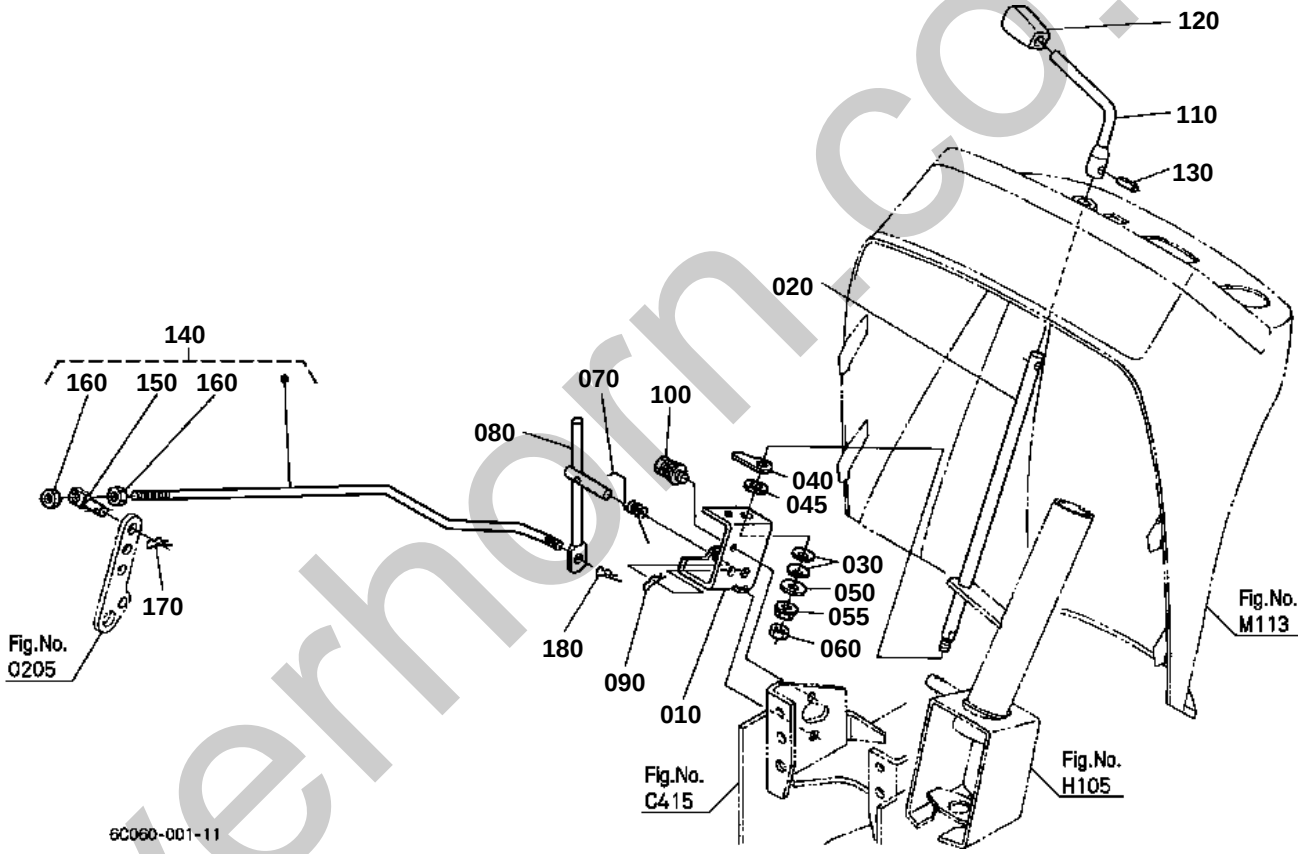

silverhorn.co.uk

ACCELERATOR LEVER

↔ Interchangeable; ≠ not interchangeable; ← new for old; → old for new

REF.No	Part No.	Description	Q'ty	S.No.	I/C	REMARKS	Weight (kgf)	Weight (lb)
010	6C040-43212	BRACKET ACCEL.	1				0.163	0.3586
020	6C040-43220	ROD ACCEL.	1				0.35	0.77
030	66116-51530	SPRING PLATE	2				0.003	0.0066
040	6C040-43250	ARM ACCELERATOR	1				0.04	0.088
045	6C040-43380	WASHER ACCEL.	1				0.004	0.0088
050	04015-60080	WASHER PLAIN	1				0.01	0.022
055	02751-50080	NUT FLANGE	1				0.006	0.0132
060	02156-50080	NUT	1				0.004	0.0088
070	6C040-43290	SPRING	1				0.005	0.011
080	6C050-43230	LINK ACCEL.	1				0.135	0.297
090	05525-61000	PIN SNAP	1				0.002	0.0044
100	01125-60820	BOLT	1				0.015	0.033
110	6C040-43244	LEVER ACCEL.	1				0.115	0.253
120	TA040-49873	GRIP	1				0.024	0.0528
130	05411-00520	PIN SPRING	1				0.002	0.0044
140	6C070-43302	ASSY ROD RELEASE	1				0.13	0.286
150	6C040-43280	CONNECTOR	1				0.008	0.0176
160	02014-50060	NUT	2				0.002	0.0044
170	05525-50800	PIN SNAP	1				0.001	0.0022
180	05525-60600	PIN SNAP	1				0.001	0.0022

silverhorn.co.uk

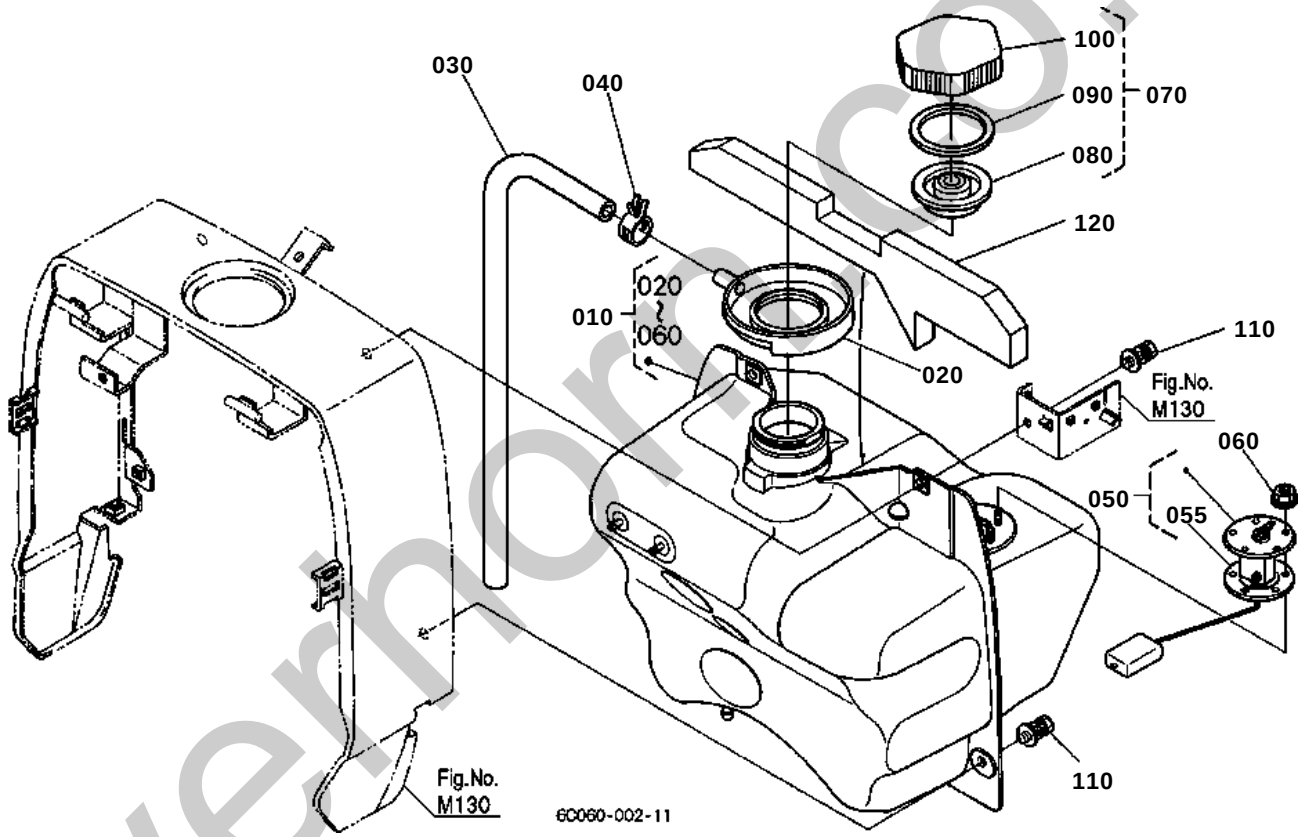

silvermorris.co.uk

FUEL TANK

↔ Interchangeable; ≠ not interchangeable; ← new for old; → old for new

REF.No	Part No.	Description	Q'ty	S.No.	I/C	REMARKS	Weight (kgf)	Weight (lb)
010	6C070-54704	ASSY TANK FUEL	1				4.3	9.46
020	6C090-54740	TRAY FUEL	1				0.04	0.088
030	6C120-54760	PIPE	1				0.09	0.198
040	09318-88185	CLAMP HOSE	1				0.004	0.0088
050	6C040-54752	GAUGE FUEL	1				0.14	0.308
055	6A320-85812	GASKET GAUGE	1				0.005	0.011
060	6C090-54860	NUT FLANGE	5				0.003	0.0066
070	6A100-54910	ASSY CAP FUEL	1				0.105	0.231
080	6A100-54952	GASKET	1				0.02	0.044
090	6A100-54942	SPACER	1				0.001	0.0022
100	6A100-54920	CAP FUEL	1				0.041	0.0902
110	01127-50820	BOLT	4	<=61889			0.02	0.044
110	01125-50825	BOLT	4	>=61890	¬		0.018	0.0396
120	6C070-54790	SPONGE	1				0.02	0.044

silverhorn.co.uk

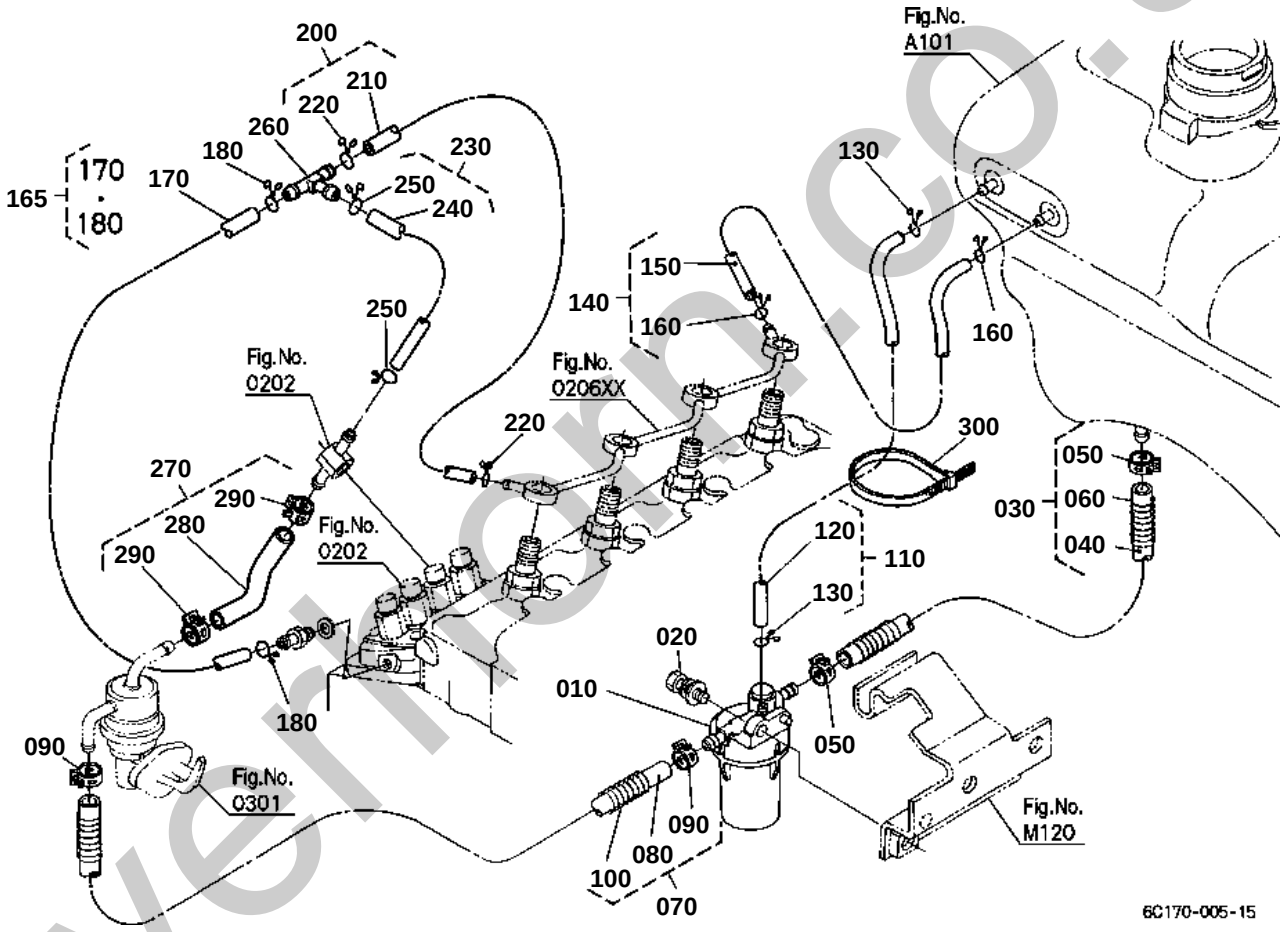

silverthorn.co.uk

OLD PARTS

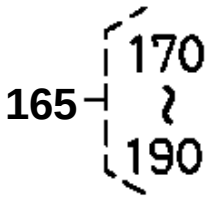

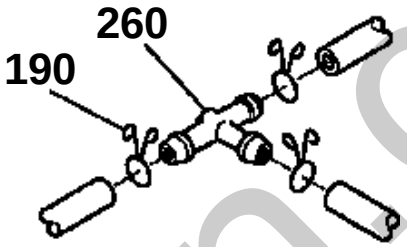

6C060-806-10

silverhorn.co.uk

FUEL PIPE

↔ Interchangeable; ≠ not interchangeable; ← new for old; → old for new

REF.No	Part No.	Description	Q'ty	S.No.	I/C	REMARKS	Weight (kgf)	Weight (lb)
010	6A320-58862	ASSY FILTER FUEL	1				0.09	0.198
020	01125-50825	BOLT	1				0.018	0.0396
030	6C040-59410	ASSY TUBE FUEL	1				0.058	0.1276
040	09661-70380	TUBE FUEL	1				0.04	0.088
050	14911-42750	CLIP PIPE	2				0.002	0.0044
060	76611-53370	SPRING PIPE PROTECT.	1				0.01	0.022
070	6C070-59410	ASSY TUBE FUEL	1				0.06	0.132
080	09661-70440	TUBE FUEL	1				0	0
090	14911-42750	CLIP PIPE	2				0.002	0.0044
100	76611-53370	SPRING PIPE PROTECT.	1				0.01	0.022
110	6C070-54852	ASSY TUBE FUEL	1				0.02	0.044
120	09661-40525	TUBE FUEL	1				0.03	0.066
130	14971-42750	CLIP PIPE	2				0.001	0.0022
140	6C040-59440	ASSY PIPE AIR VENT	1				0.022	0.0484
150	09661-40400	TUBE FUEL	1				0.02	0.044
160	14971-42750	CLIP PIPE	2				0.001	0.0022
165	16294-42500	ASSY TUBE FUEL	1	<=60142			0.01	0.022
165	16294-42502	ASSY TUBE FUEL	1	>=60143	1		0.01	0.022
170	09661-40150	TUBE FUEL	1				0.008	0.0176
180	14971-42750	CLIP PIPE	1	<=60142			0.001	0.0022
180	14971-42750	CLIP PIPE	2	>=60143			0.001	0.0022
190	16241-42320	BAND PIPE	1	<=60142			0.005	0.011
200	17208-42030	ASSY PIPE OVER FLOW	1				0.006	0.0132
210	09661-40100	TUBE FUEL	1				0.006	0.0132
220	14971-42750	CLIP PIPE	2				0.001	0.0022
230	16282-42020	ASSY PIPE OVER FLOW	1				0.01	0.022
240	09661-40040	TUBE FUEL	1				0.005	0.011
250	14971-42750	CLIP PIPE	2				0.001	0.0022
260	K3511-58390	JOINT T-PIPE	1	<=60142			0.001	0.0022
260	1C020-42360	JOINT T-PIPE	1	>=60143	1		0.002	0.0044
260	1G065-42360	JOINT T-PIPE	1	>=64841	¬		0	0
270	6C070-59430	ASSY TUBE FUEL	1				0.01	0.022
280	09661-80095	TUBE FUEL	1				0.011	0.0242
290	14911-42750	CLIP PIPE	2				0.002	0.0044
300	55311-41260	BAND CORD	1				0.007	0.0154

silvermorn.co.uk

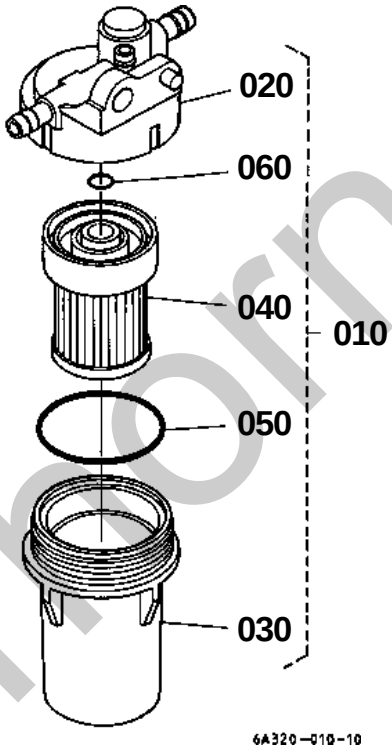

silverhorn.co.uk

FUEL FILTER [COMPONENT PARTS]

↔ Interchangeable; ≠ not interchangeable; ← new for old; → old for new

REF.No	Part No.	Description	Q'ty	S.No.	I/C	REMARKS	Weight (kgf)	Weight (lb)
010	6A320-58862	ASSY FILTER FUEL	1				0.09	0.198
020	6A320-59912	BODY	1			NOT SALE	0.035	0.077
030	6A320-59920	CUP	1				0.03	0.066
040	6A320-59930	FILTER	1				0.025	0.055
050	6A320-59940	O-RING	1				0.001	0.0022
060	6A320-59950	O-RING	1				0.001	0.0022

silverhorn.co.uk

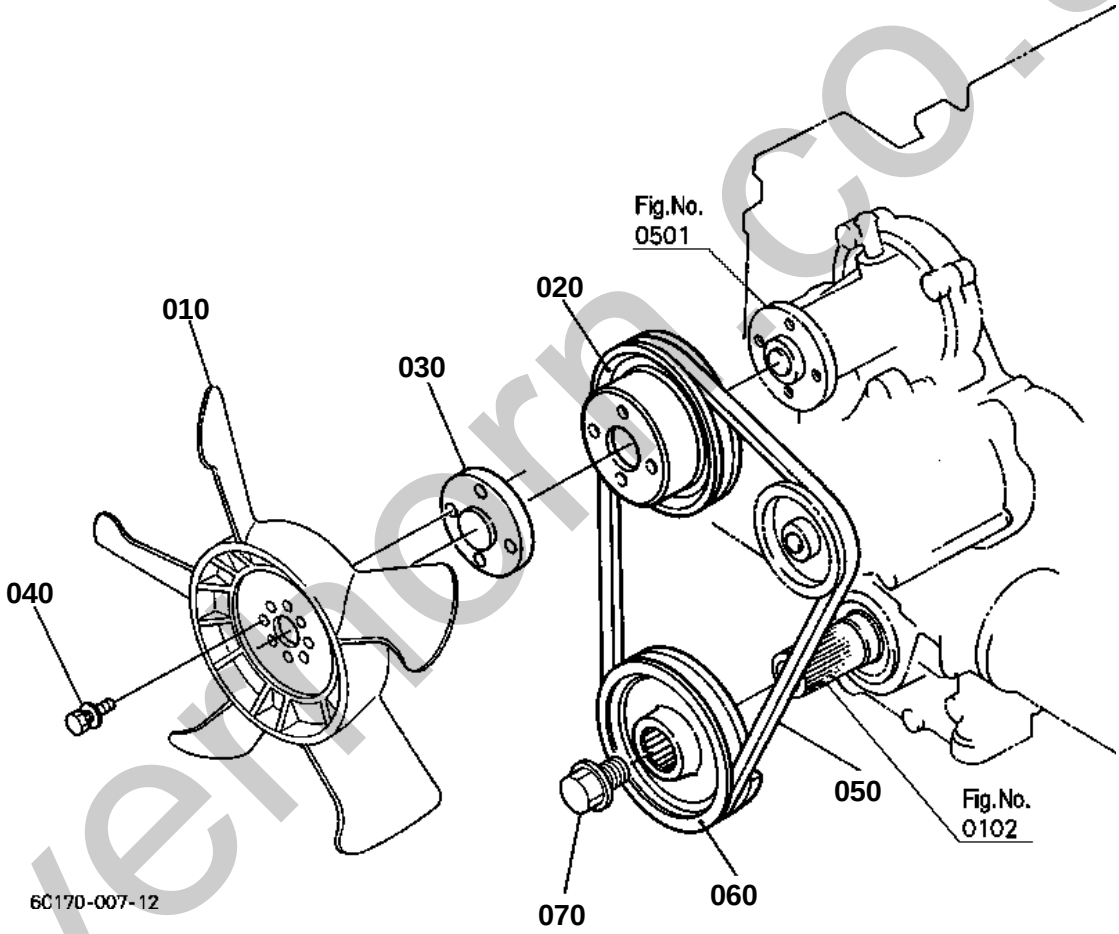

silvermorn.co.uk

OLD PARTS

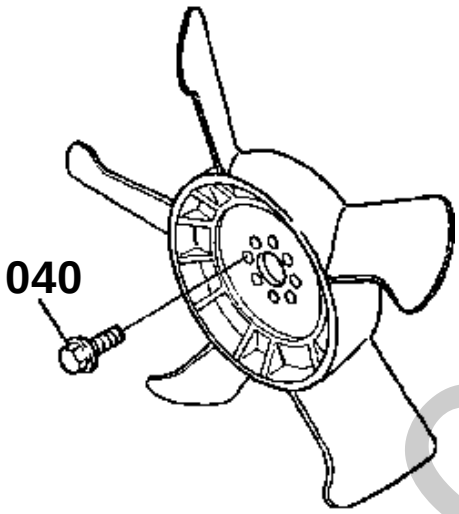

6C060-807-10

silverhorn.co.uk

FAN

↔ Interchangeable; ≠ not interchangeable; ← new for old; → old for new

REF.No	Part No.	Description	Q'ty	S.No.	I/C	REMARKS	Weight (kgf)	Weight (lb)
010	16264-74110	FAN	1				0.32	0.704
020	16241-74250	PULLEY FAN	1				0.24	0.528
030	17053-74150	COLLAR FAN	1				0.11	0.242
040	01754-50630	BOLT FLANGE	4	<=64279			0.01	0.022
040	01025-50635	BOLT	4	>=64280	¬		0.001	0.0022
050	16241-97010	V BELT	1				0.08	0.176
060	16271-74280	PULLEY FAN DRIVE	1				1	2.2
070	16241-91020	BOLT FAN DRIVE	1				0.1	0.22

silverhorn.co.uk

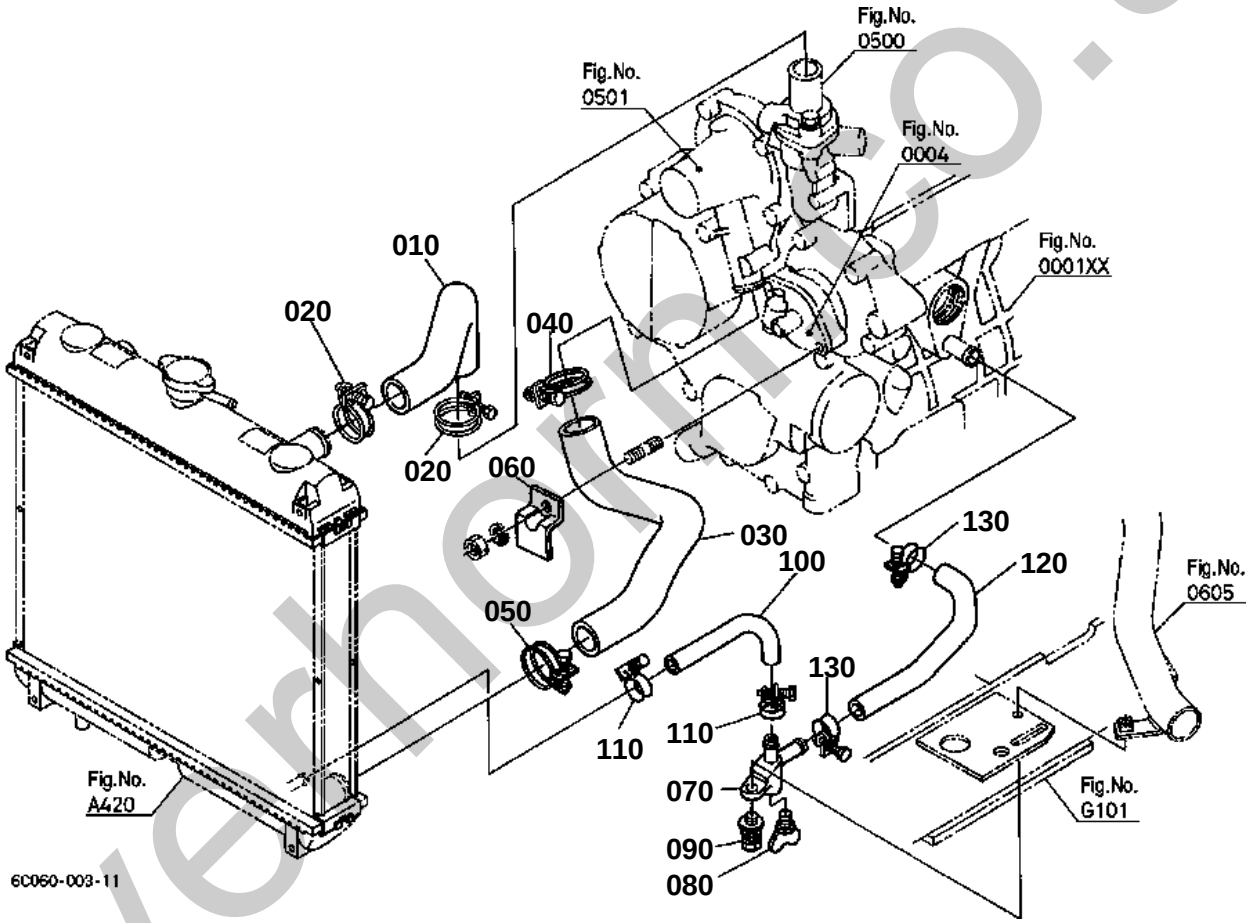

silverhorn.co.uk

WATER PIPE

↔ Interchangeable; ≠ not interchangeable; ← new for old; → old for new

REF.No	Part No.	Description	Q'ty	S.No.	I/C	REMARKS	Weight (kgf)	Weight (lb)
010	6C070-58630	HOSE WATER	1				0.11	0.242
020	67955-58630	CLAMP HOSE	2				0.025	0.055
030	6C070-58570	HOSE WATER	1				0.175	0.385
040	67955-58630	CLAMP HOSE	1				0.025	0.055
050	67955-58630	CLAMP HOSE	1				0.025	0.055
060	6C040-58640	CLAMP WATER HOSE	1				0.031	0.0682
070	6C040-58650	COCK	1				0.017	0.0374
080	55364-82110	COCK DRAIN	1				0.005	0.011
090	01125-50822	BOLT	1				0.015	0.033
100	6C040-58680	HOSE DRAIN	1				0.023	0.0506
110	6C040-58720	CLAMP HOSE	2				0.017	0.0374
120	6C070-58690	HOSE DRAIN	1				0.04	0.088
130	6C040-58730	CLAMP HOSE	2				0.017	0.0374

silverhorn.co.uk

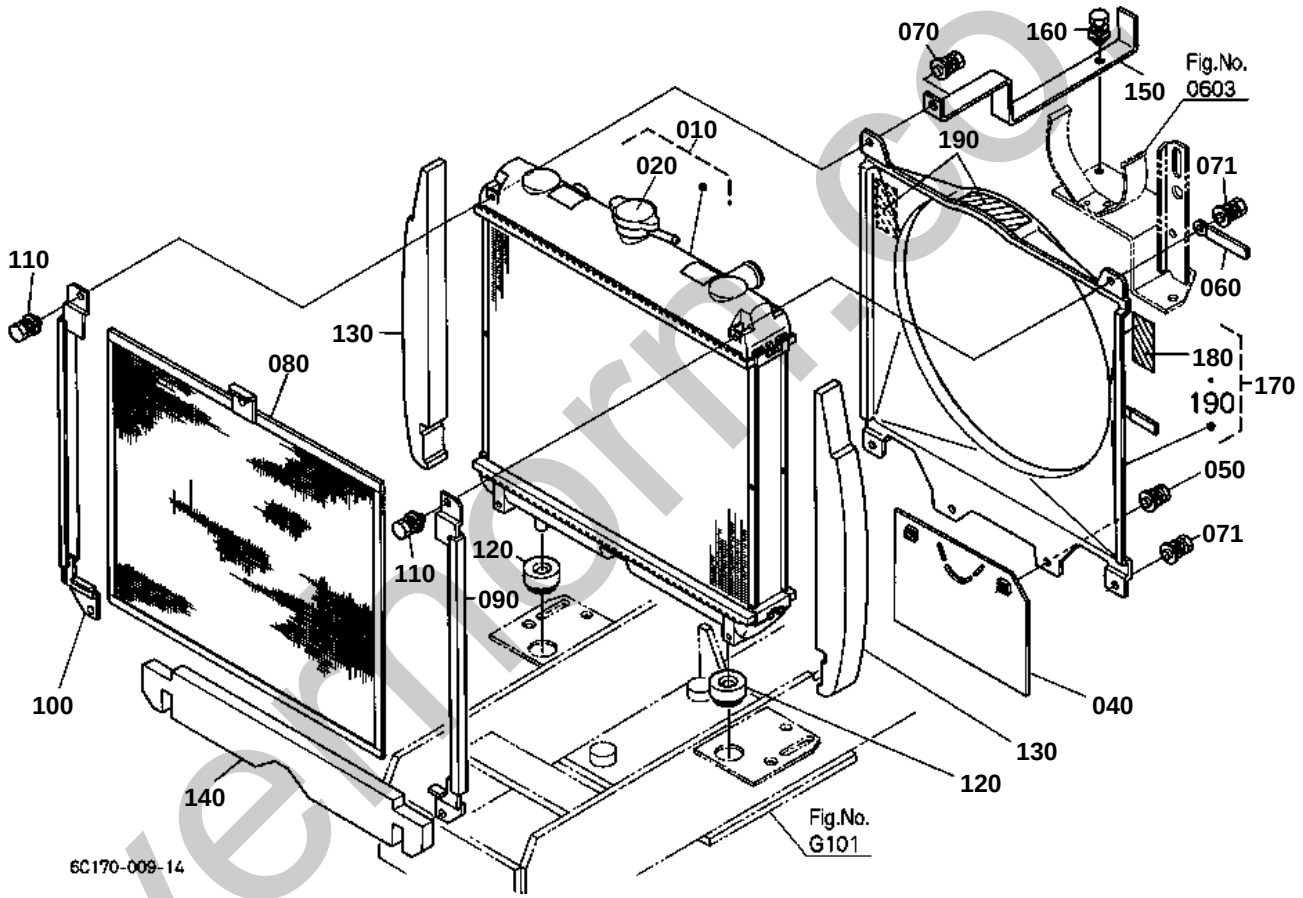

silvermorn.co.uk

OLD PARTS

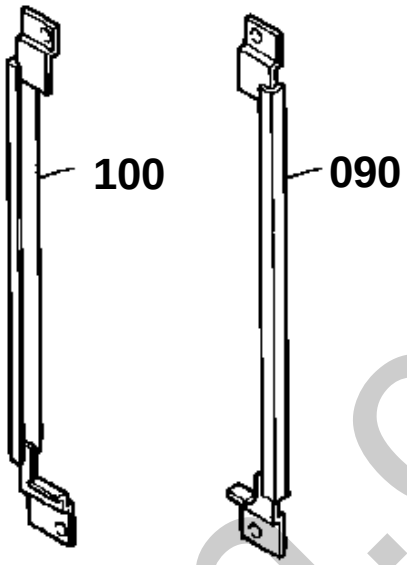

6C060-808-10

silverhorn.co.uk

RADIATOR

↔ Interchangeable; ≠ not interchangeable; ← new for old; → old for new

REF.No	Part No.	Description	Q'ty	S.No.	I/C	REMARKS	Weight (kgf)	Weight (lb)
010	6C170-58520	ASSY RADIATOR	1				3.5	7.7
020	6C040-58660	ASSY CAP	1				0	0
020	17214-72020	ASSY CAP RADIATOR	1		«		0.05	0.11
030	99999-99999	BLANK	0				0	0
040	6C040-58620	PLATE SHUTTER	1				0.117	0.2574
050	01125-60816	BOLT	2				0.01	0.022
060	15272-67590	CLAMP CORD	1				0.004	0.0088
070	01025-50616	BOLT	1				0.005	0.011
071	01025-50612	BOLT	3				0.005	0.011
080	6C040-58530	NET RADIATOR	1				0.25	0.55
090	6C040-58540	GUIDE RADIATOR NET L	1	<=61205			0	0
090	6C040-58543	GUIDE RADIATOR NET L	1	>=61206	¬		0.114	0.2508
100	6C040-58550	GUIDE RADIATOR NET R	1	<=61205			0	0
100	6C040-58553	GUIDE RADIATOR NET R	1	>=61206	¬		0.114	0.2508
110	01025-50612	BOLT	4				0.005	0.011
120	6C040-58580	CUSHION RADIATOR	2				0.021	0.0462
130	6C040-54454	TAPE RADIATOR LH	2				0.033	0.0726
140	6C040-54472	TAPE RADIATOR	1				0.027	0.0594
150	6C070-58592	STAY RADIATOR	1				0.2	0.44
160	01025-50616	BOLT	1				0.005	0.011
170	6C040-58602	KIT SHROUD FAN	1				0.7	1.54
180	TA040-49580	LABEL MUFFLER	1				0.001	0.0022
190	32751-49580	LABEL FAN BELT	2				0.001	0.0022

silverhorn.co.uk

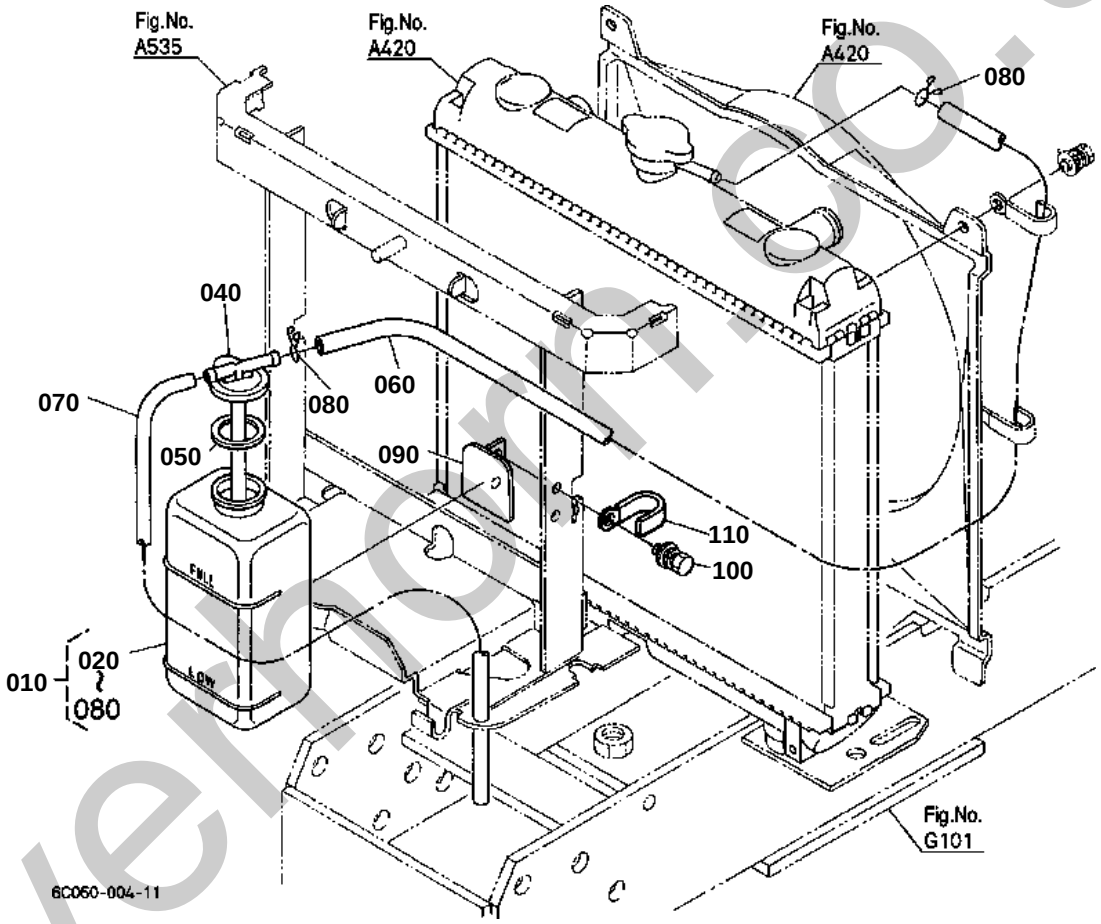

silverhorn.co.uk

RESERVE TANK

↔ Interchangeable; ≠ not interchangeable; ← new for old; → old for new

REF.No	Part No.	Description	Q'ty	S.No.	I/C	REMARKS	Weight (kgf)	Weight (lb)
010	6C070-58800	ASSY TANK RESERVE	1				0.27	0.594
020	15531-72410	BODY TANK	1				0.4	0.88
030	99999-99999	BLANK	0				0	0
040	15531-72422	CAP	1				0.001	0.0022
050	15531-72432	GASKET	1				0.002	0.0044
060	15471-72440	PIPE WATER OVER FLOW	1				0.05	0.11
070	6C070-58850	PIPE WATER OVER FLOW	1				0.025	0.055
080	15501-72470	CLIP PIPE	2				0.005	0.011
090	6A100-58830	SUPPORT RESERVE TANK	1				0.05	0.11
100	01025-50616	BOLT	2				0.005	0.011
110	15272-67590	CLAMP CORD	1				0.004	0.0088

silverhorn.co.uk

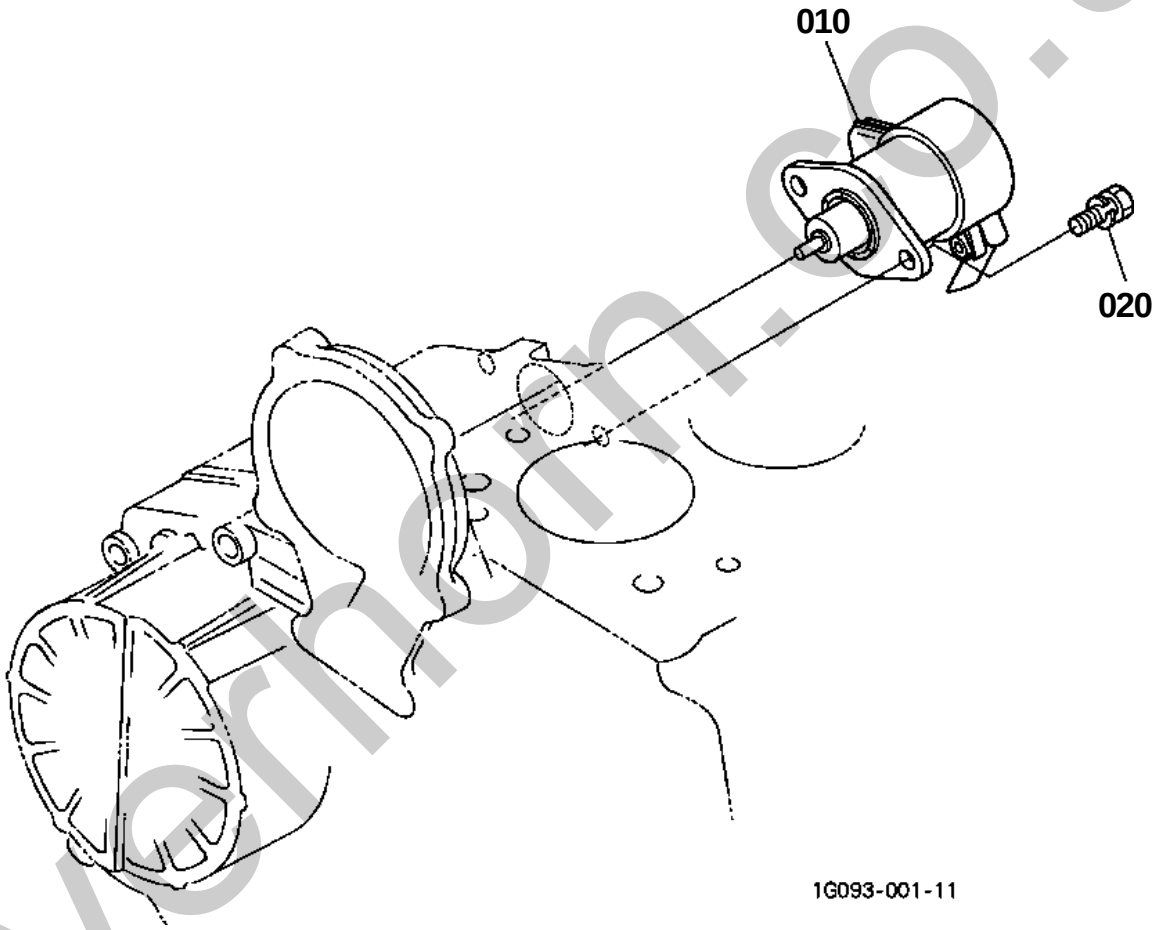

silvermon.co.uk

OLD PARTS

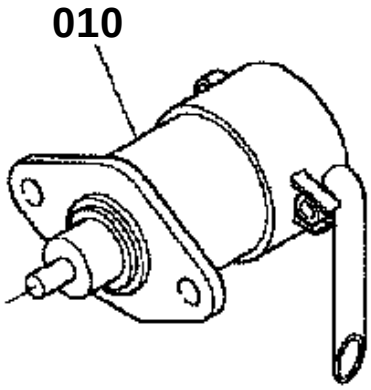

6C070-808-10

silverhorn.co.uk

STOP SOLENOID

↔ Interchangeable; ≠ not interchangeable; ← new for old; → old for new

REF.No	Part No.	Description	Q'ty	S.No.	I/C	REMARKS	Weight (kgf)	Weight (lb)
010	17208-60010	ASSY SOLENOID STOP	1				0.28	0.616
010	32721-60010	SOLENOID STOP	1		«		0.28	0.616
020	01202-50614	BOLT	2	<=65289			0.006	0.0132
020	01202-50616	BOLT	2	>=65290	1		0.006	0.0132

silverhorn.co.uk

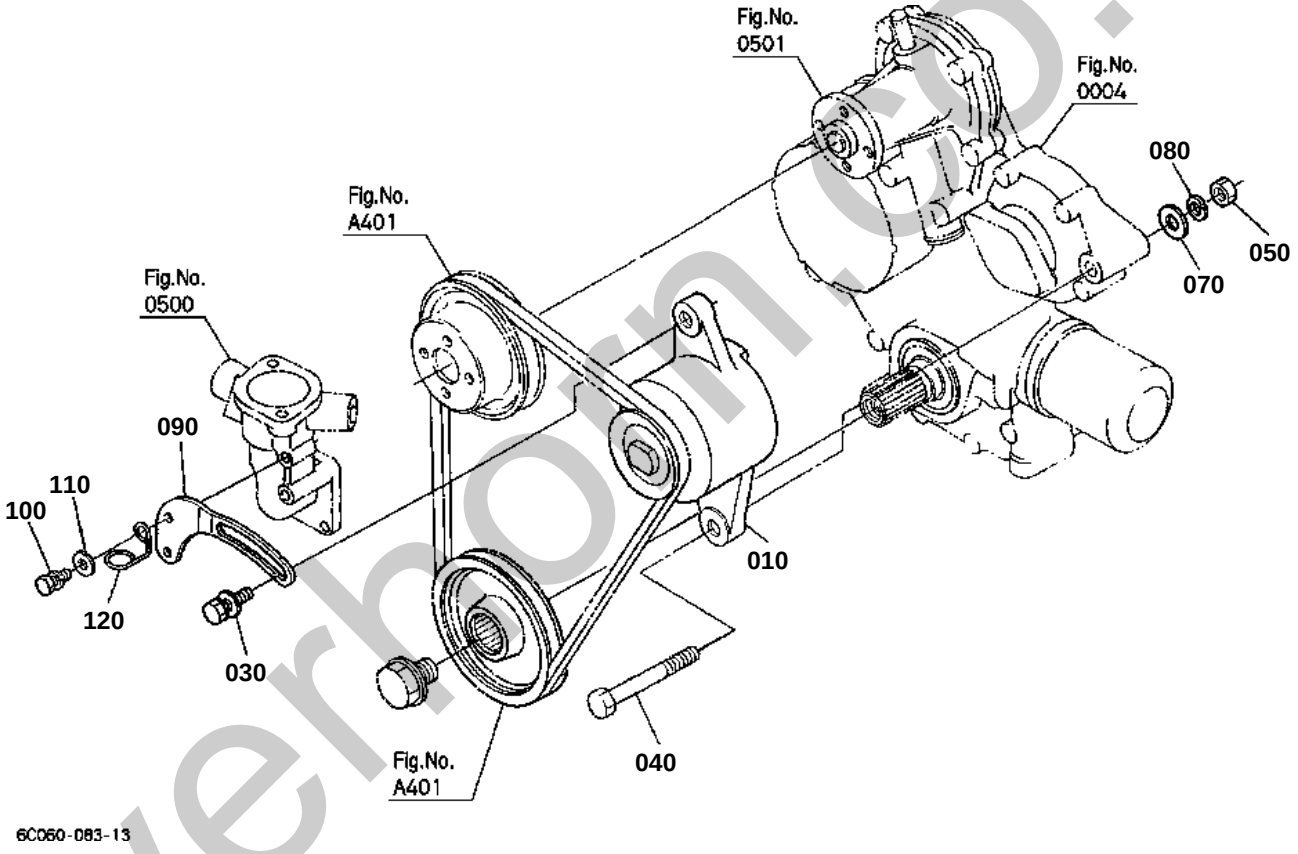

silverhorn.co.uk

OLD PARTS

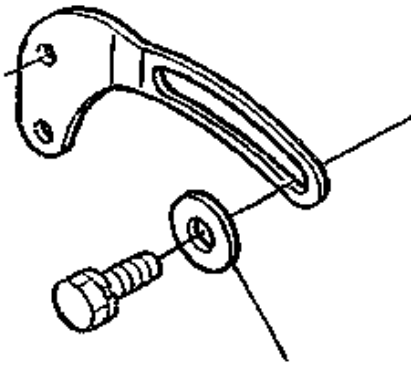

1G088-800-10

silverhorn.co.uk

DYNAMO

↔ Interchangeable; ≠ not interchangeable; ← new for old; → old for new

REF.No	Part No.	Description	Q'ty	S.No.	I/C	REMARKS	Weight (kgf)	Weight (lb)
010	6C040-59250	ASSY DYNAMO	1				1.33	2.926
020	99999-99999	BLANK	0				0	0
030	01123-50830	BOLT	1	<=4E9526			0.015	0.033
030	01127-50830	BOLT	1	>=4G0001	¬		0.023	0.0506
040	01153-50860	BOLT	1				0.024	0.0528
050	02112-50080	NUT	1				0.003	0.0066
060	04015-60080	WASHER PLAIN	1	<=4E9526			0.01	0.022
070	04012-50080	WASHER PLAIN	1				0.001	0.0022
080	04512-60080	WASHER SPRING	1				0.002	0.0044
090	16225-64420	STAY DYNAMO	1				0.084	0.1848
100	01023-50618	BOLT	1				0.006	0.0132
110	04012-50060	WASHER PLAIN	1				0.001	0.0022
120	16271-83370	CLAMP CORD	1				0.005	0.011

silverhorn.co.uk

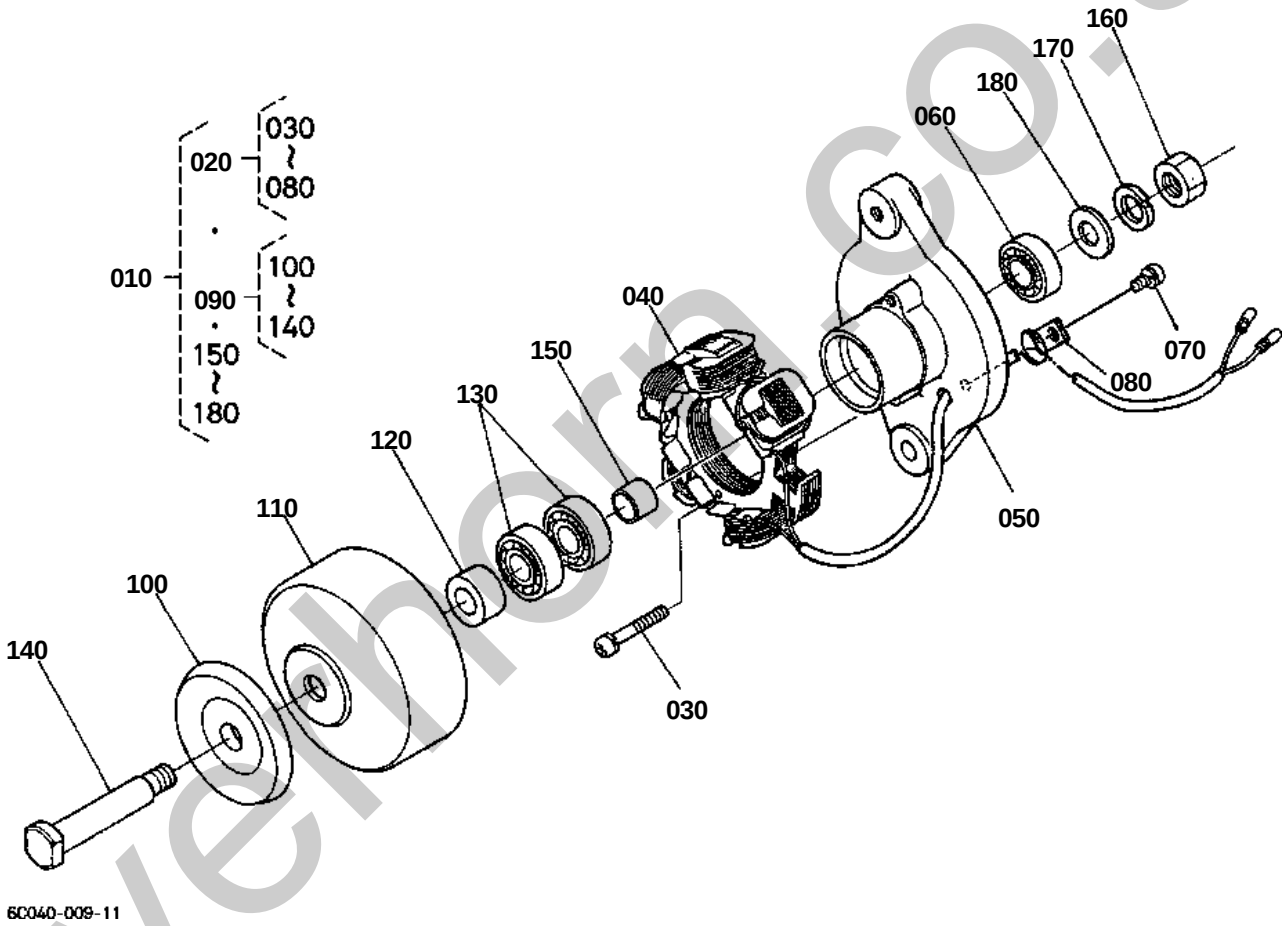

silverthorn.co.uk

DYNAMO [COMPONENT PARTS]

↔ Interchangeable; ≠ not interchangeable; ← new for old; → old for new

REF.No	Part No.	Description	Q'ty	S.No.	I/C	REMARKS	Weight (kgf)	Weight (lb)
010	6C040-59250	ASSY DYNAMO	1				1.33	2.926
020	6C040-59260	COMP.STATOR	1				0.55	1.21
030	15261-93010	SCREW ROUND HEAD	2				0.003	0.0066
040	15531-64292	STATOR	1				0.29	0.638
050	6C040-82880	PLATE	1				0.267	0.5874
060	15531-74180	BEARING BALL	1				0.04	0.088
070	15531-93010	SCREW ROUND HEAD	1				0.002	0.0044
080	15531-64190	CLAMP CORD	1				0.005	0.011
090	6C040-59270	COMP.FLYWHEEL	1				0.75	1.65
100	15531-64110	PULLEY	1				0.15	0.33
110	6C040-82850	FLYWHEEL DYNAMO	1				0.48	1.056
120	6C040-82860	COLLAR	1				0.014	0.0308
130	15531-74180	BEARING BALL	2				0.04	0.088
140	6C040-82870	SHAFT	1				0.075	0.165
150	15261-64150	COLLAR	1				0.02	0.044
160	15261-92030	NUT	1				0.01	0.022
170	15261-94070	WASHER SPRING	1				0.003	0.0066
180	15261-94020	WASHER PLAIN	1				0.007	0.0154

silverhorn.co.uk

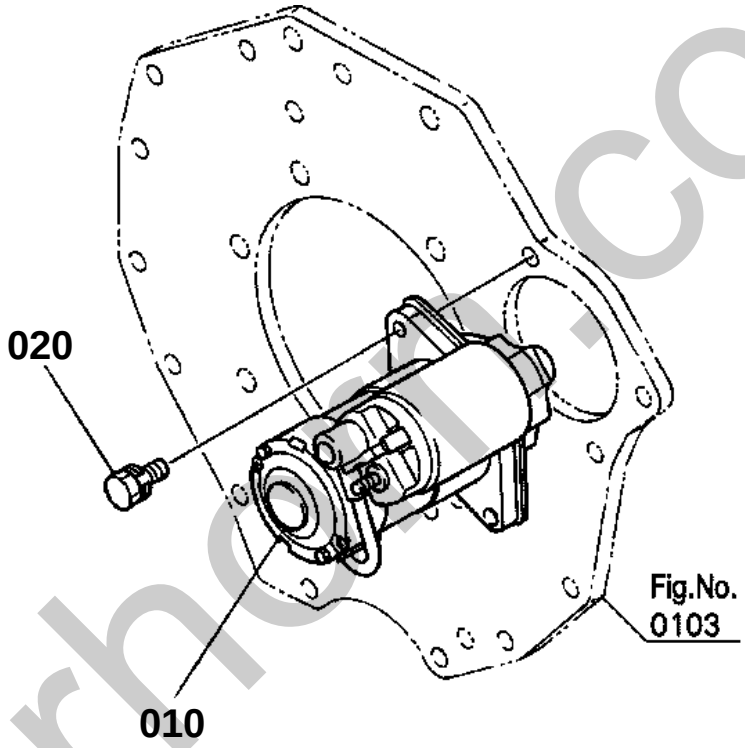

6C060-005-10

silverhorn.co.uk

↔ Interchangeable; ≠ not interchangeable; ← new for old; → old for new

REF.No	Part No.	Description	Q'ty	S.No.	I/C	REMARKS	Weight (kgf)	Weight (lb)
010	6C070-59210	ASSY STARTER	1				3.2	7.04
020	01123-50840	BOLT	2				0.018	0.0396

silverhorn.co.uk

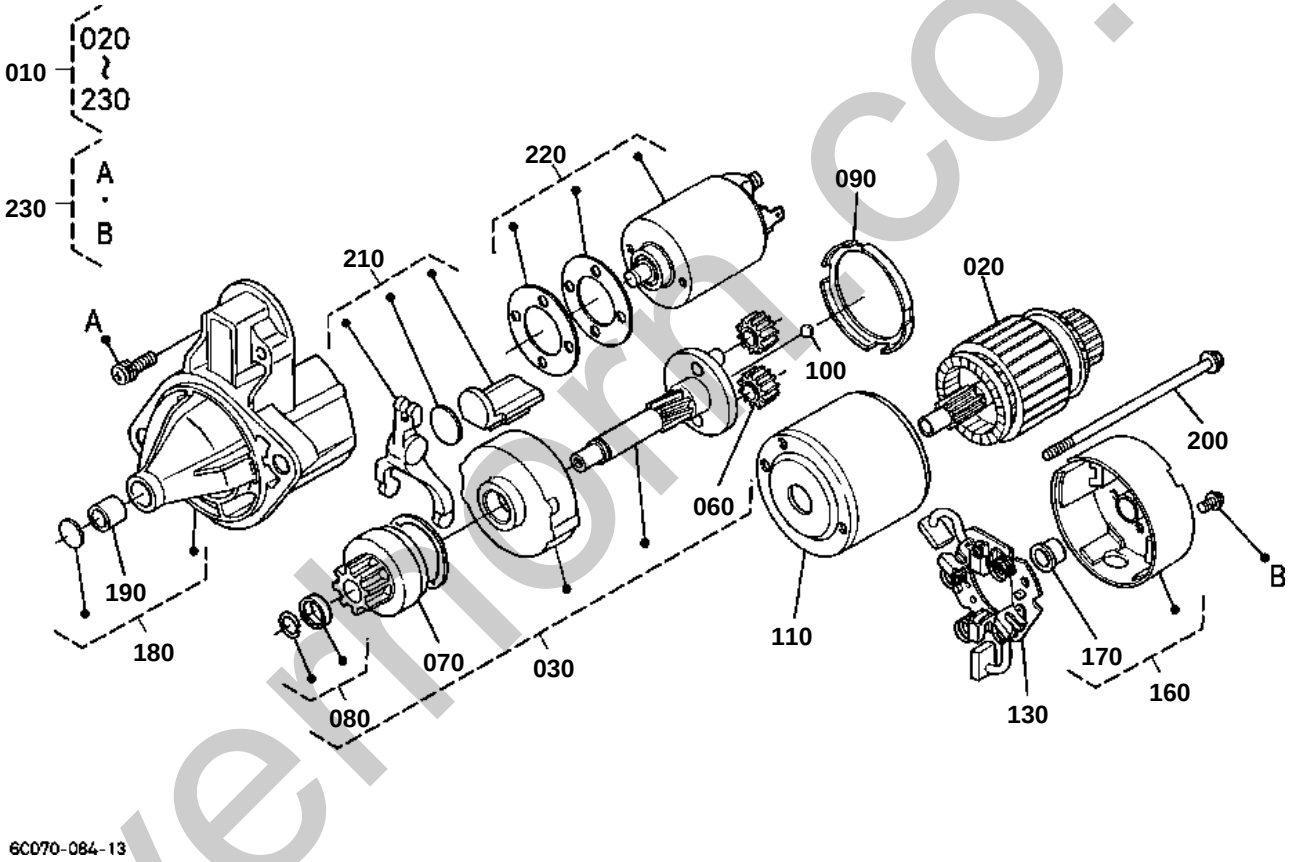

silverthorn.co.uk

STARTER [COMPONENT PARTS]

↔ Interchangeable; ≠ not interchangeable; ← new for old; → old for new

REF.No	Part No.	Description	Q'ty	S.No.	I/C	REMARKS	Weight (kgf)	Weight (lb)
010	6C070-59210	ASSY STARTER	1				3.2	7.04
020	6C070-82610	ARMATURE	1				0.8	1.76
030	6C070-82620	ASSY SHAFT	1				0.52	1.144
040	99999-99999	BLANK	0				0	0
050	99999-99999	BLANK	0				0	0
060	6C040-82650	GEAR PLANETARY	3				0.016	0.0352
070	6C040-82660	CLUTCH OVER RUNNING	1				0.3	0.66
070	16853-63040	CLUTCH OVER RUNNING	1		«		0.25	0.55
080	6C040-82670	STOPPER	1				0.004	0.0088
090	6C070-82680	GASKET	1				0.004	0.0088
100	6C040-82690	BALL	1				0.001	0.0022
110	6C070-82700	YOKE	1				0.65	1.43
120	99999-99999	BLANK	0				0	0
130	6C070-82720	ASSY HOLDER BRUSH	1				0.07	0.154
140	99999-99999	BLANK	0				0	0
150	99999-99999	BLANK	0				0	0
160	6C070-82750	ASSY BRACKET REAR	1				0.16	0.352
170	6C040-82760	BUSH	1				0.005	0.011
180	6C070-82770	ASSY BRACKET FRONT	1				0.57	1.254
190	15852-63240	BUSH	1				0.006	0.0132
200	6C070-82780	BOLT	2				0.012	0.0264
210	6C070-82790	LEVER FORK	1				0.018	0.0396
220	6C040-82800	ASSY SWITCH MAGNETIC	1				0.63	1.386
230	15852-93310	SCREW PAN-HEAD	1				0.02	0.044

silverhorn.co.uk

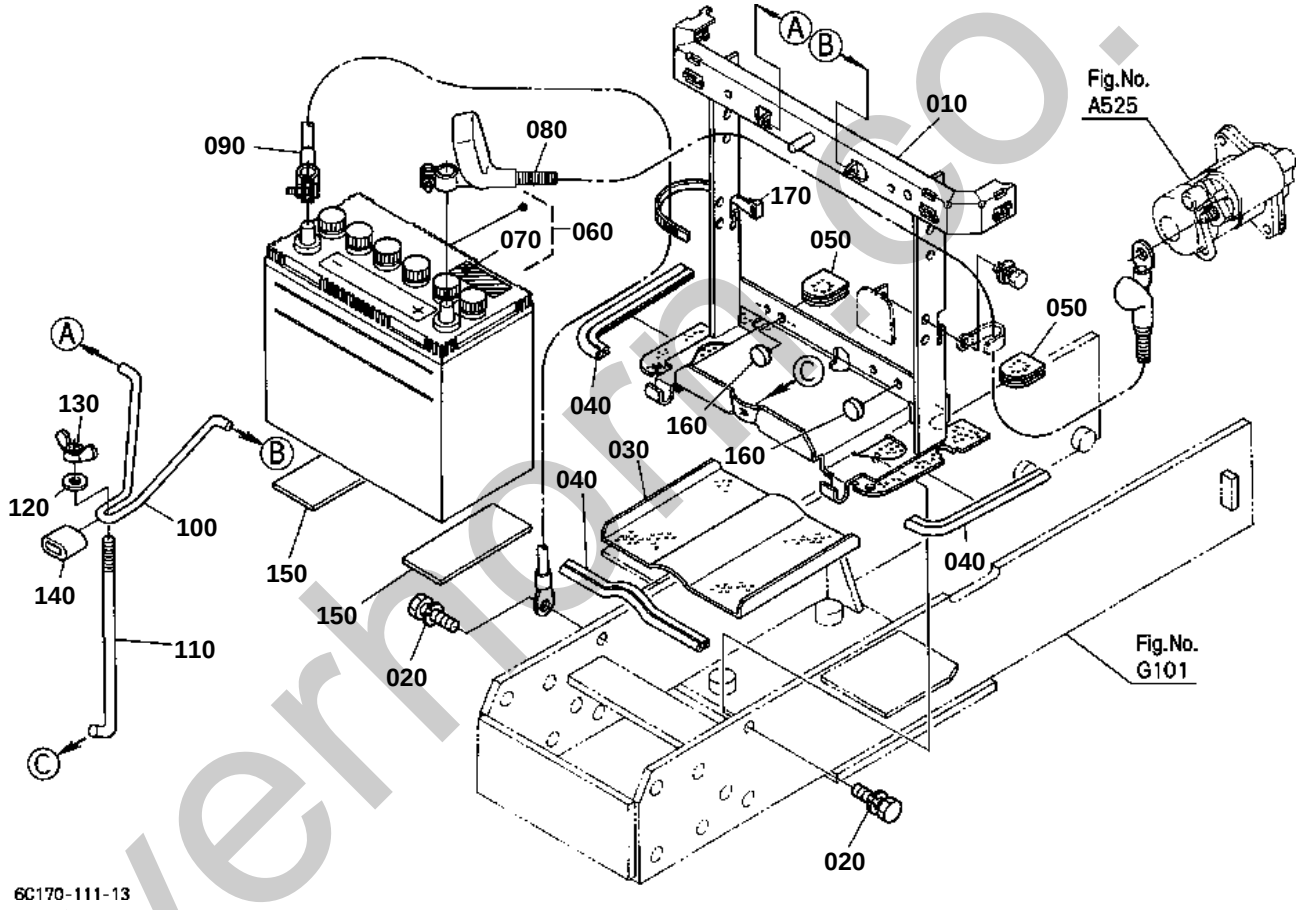

silverhorse.co.uk

OLD PARTS

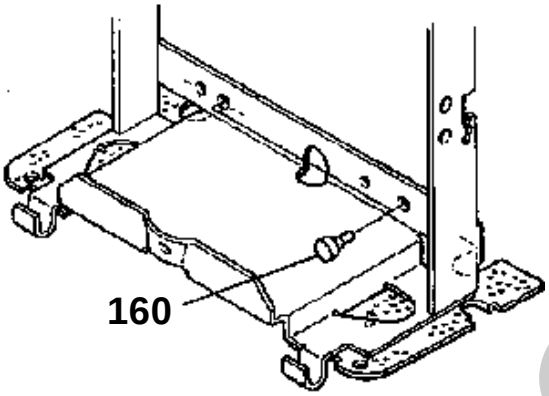

6C060-809-10

silverhorn.co.uk

BATTERY

↔ Interchangeable; ≠ not interchangeable; ← new for old; → old for new

REF.No	Part No.	Description	Q'ty	S.No.	I/C	REMARKS	Weight (kgf)	Weight (lb)
010	6C040-51228	BRACKET BATTERY	1				2.25	4.95
020	01135-61025	BOLT	2				0.04	0.088
030	6C040-51260	NET	1	<=63897			0.25	0.55
030	6C040-51262	NET	1	>=63898	¬		0.25	0.55
040	76650-42520	TRIM DUSTPROOF	3				0.03	0.066
050	6C040-51290	RUBBER	2				0.003	0.0066
060	99999-99999	ASSY BATTERY	1			55B24L	0	0
070	6C040-55590	LABEL BATTERY	1			ENGLISH	0.001	0.0022
080	6C070-55530	CORD BATTERY(+)	1				0.23	0.506
090	6C040-55540	CORD BATTERY(-)	1				0.11	0.242
100	6C040-55553	RETAINER BATTERY	1				0.075	0.165
110	6C040-55560	BOLT HOOK	1				0.038	0.0836
120	04015-60060	WASHER PLAIN	1				0.005	0.011
130	02810-50060	NUT WING	1				0.009	0.0198
140	6C040-55580	CUSHION	1				0.002	0.0044
150	34150-33220	CUSHION	2				0.015	0.033
160	67156-52170	CUSHION	2	<=64840			0.05	0.11
160	6C040-42342	CUSHION	2	>=64841	1		0.005	0.011
170	53581-64150	BAND CORD	1				0.002	0.0044

silverhorn.co.uk

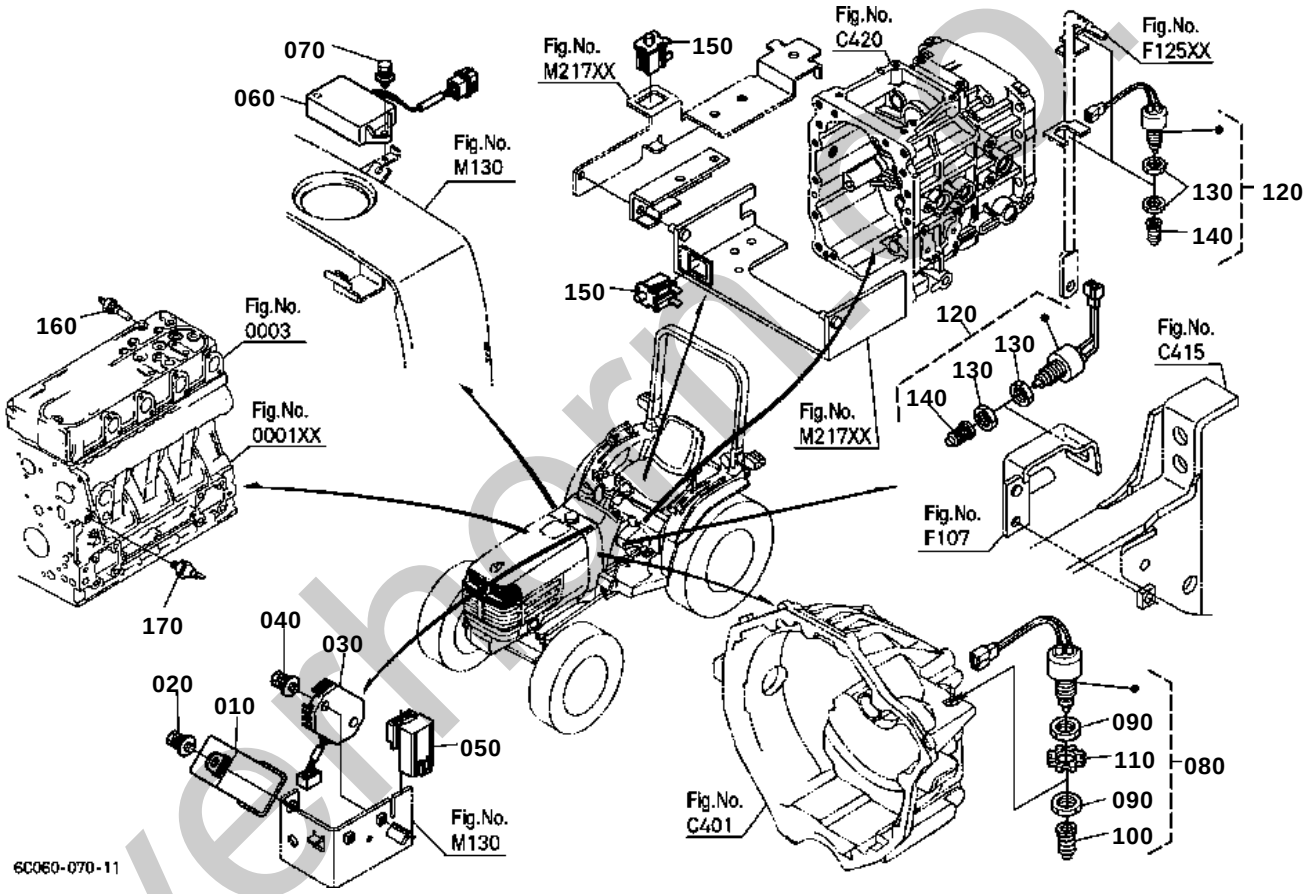

silverhorse.co.uk

SWITCH [MID PTO TYPE]

S.No.;<=57577

↔ Interchangeable; ≠ not interchangeable; ← new for old; → old for new

REF.No	Part No.	Description	Q'ty	S.No.	I/C	REMARKS	Weight (kgf)	Weight (lb)
010	3F240-75430	UNIT FLASHER	1				0.06	0.132
020	01025-50616	BOLT	1				0.005	0.011
030	RP201-53710	ASSY REGULATOR	1				0.182	0.4004
040	01025-50620	BOLT	1				0.02	0.044
050	T1060-33720	RELAY STARTER	1				0.02	0.044
060	K3511-55222	CONTROLLER	1				0.18	0.396
070	01025-50620	BOLT	1				0.02	0.044
080	6C040-55852	ASSY SWITCH SAFETY	1				0.124	0.2728
090	67111-55830	NUT SAFETY SWITCH	2				0.035	0.077
100	67111-55840	CAP SAFETY SWITCH	1				0.002	0.0044
110	6C040-55862	WASHER TOOTHED	1				0.004	0.0088
120	52320-42900	SWITCH SAFETY	3				0.1	0.22
130	67111-55830	NUT SAFETY SWITCH	6				0.035	0.077
140	67111-55840	CAP SAFETY SWITCH	3				0.002	0.0044
150	K1122-62280	SWITCH SEAT	2				0.011	0.0242
160	31351-32830	SENSOR THERMO	1				0.02	0.044
170	15531-39010	SWITCH OIL	1				0.032	0.0704

silverhorn.co.uk

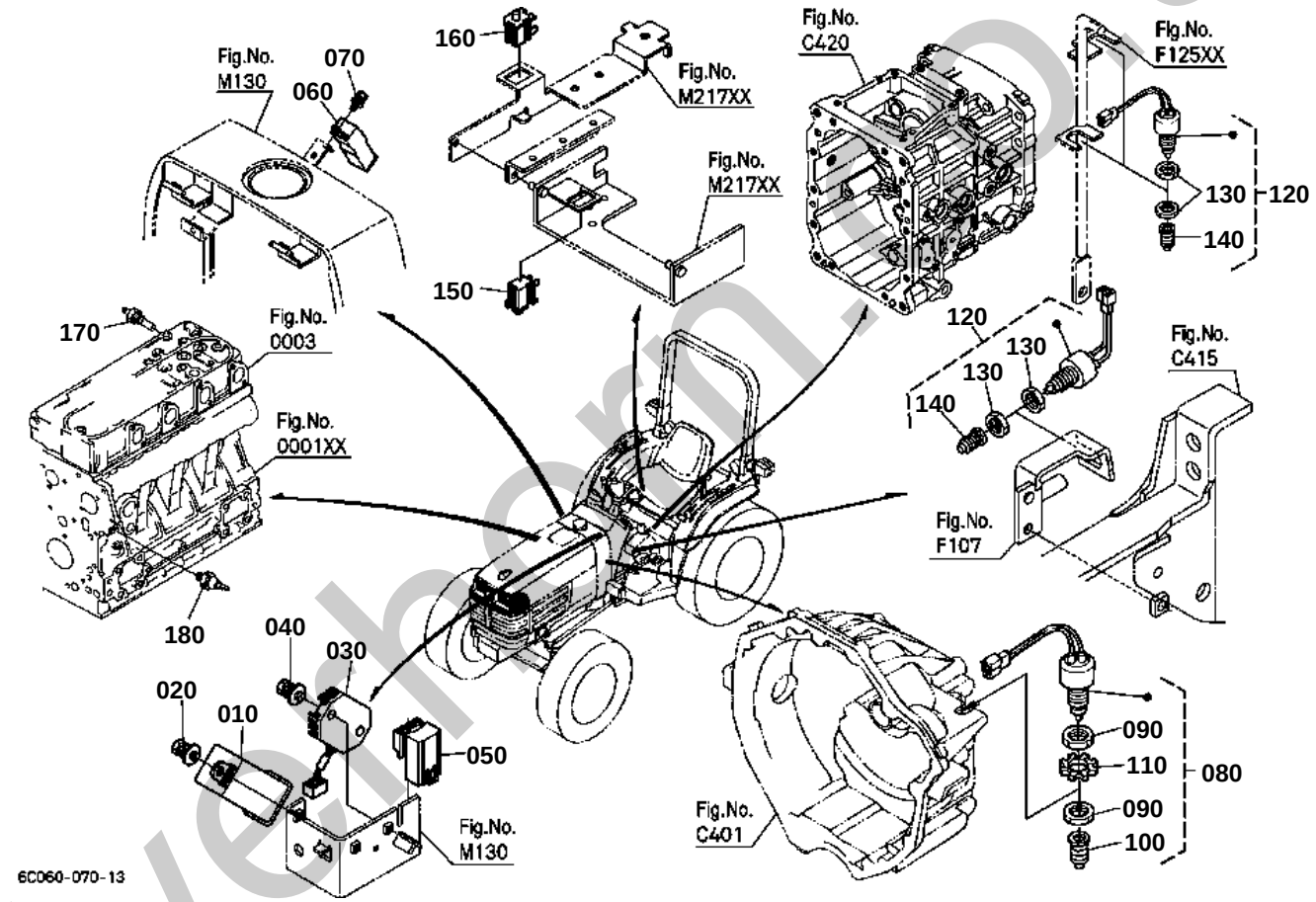

silvethorn.co.uk

SWITCH [MID PTO TYPE]
S.No.;>=57578

↔ Interchangeable; ≠ not interchangeable; ← new for old; → old for new

REF.No	Part No.	Description	Q'ty	S.No.	I/C	REMARKS	Weight (kgf)	Weight (lb)
010	3F240-75430	UNIT FLASHER	1				0.06	0.132
020	01025-50616	BOLT	1				0.005	0.011
030	5H215-41954	ASSY REGULATOR	1	<=60543			0	0
030	5H215-41955	ASSY REGULATOR	1	>=60544	¬		0.187	0.4114
040	01025-50620	BOLT	1				0.02	0.044
050	T1060-33720	RELAY STARTER	1				0.02	0.044
060	6C190-55510	CONTROLLER(OPC)	1				0.06	0.132
070	01023-50616	BOLT	1				0.005	0.011
080	6C040-55852	ASSY SWITCH SAFETY	1				0.124	0.2728
090	67111-55830	NUT SAFETY SWITCH	2				0.035	0.077
100	67111-55840	CAP SAFETY SWITCH	1				0.002	0.0044
110	6C040-55862	WASHER TOOTHED	1				0.004	0.0088
120	52320-42900	SWITCH SAFETY	3				0.1	0.22
130	67111-55830	NUT SAFETY SWITCH	6				0.035	0.077
140	67111-55840	CAP SAFETY SWITCH	3				0.002	0.0044
150	K1122-62280	SWITCH SEAT	1				0.011	0.0242
160	K1122-62280	SWITCH SEAT	1				0.011	0.0242
170	31351-32830	SENSOR THERMO	1				0.02	0.044
180	15531-39010	SWITCH OIL	1				0.032	0.0704

silverhorn.co.uk

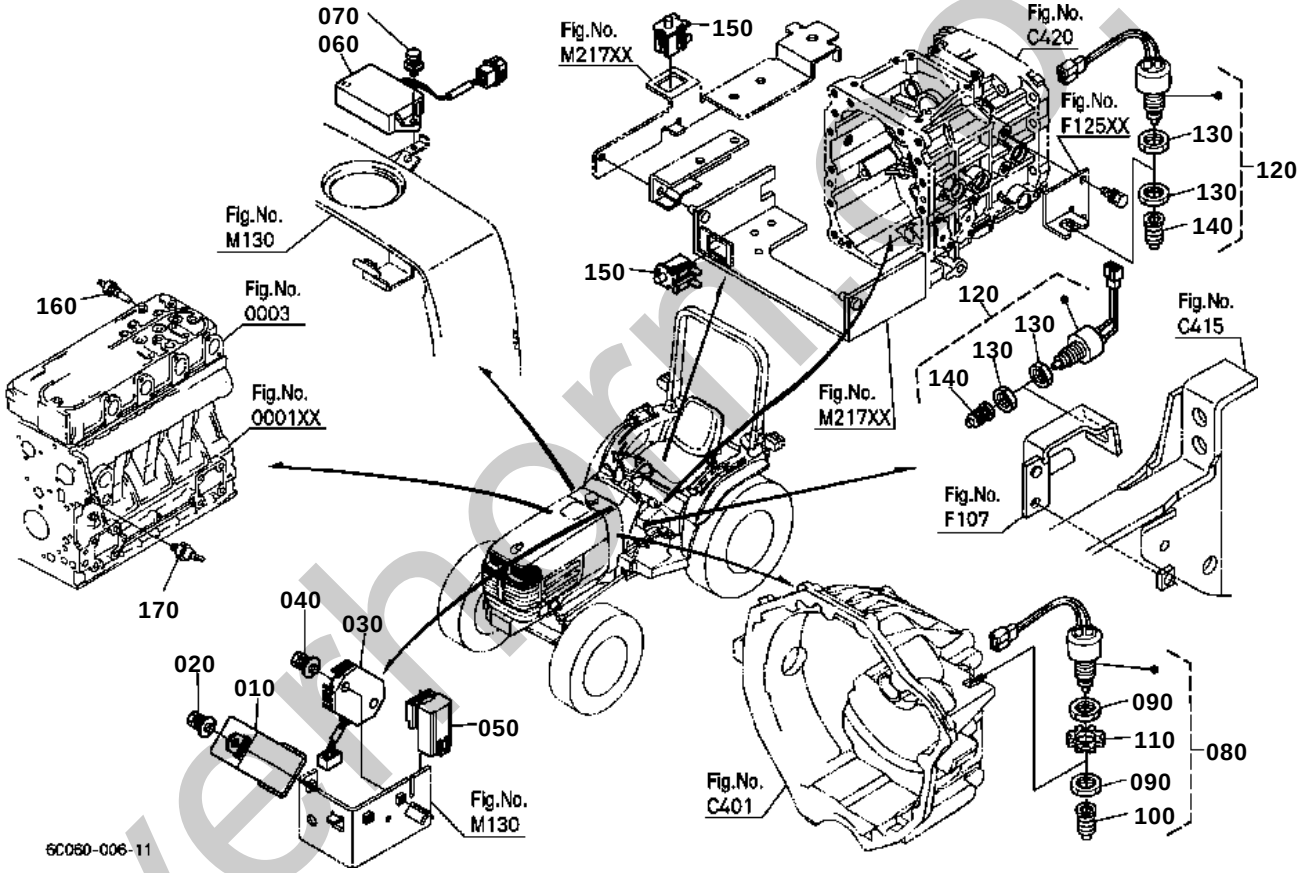

silverhorn.co.uk

SWITCH [EXCEPT MID PTO TYPE]

S.No.;<=57577

↔ Interchangeable; ≠ not interchangeable; ← new for old; → old for new

REF.No	Part No.	Description	Q'ty	S.No.	I/C	REMARKS	Weight (kgf)	Weight (lb)
010	3F240-75430	UNIT FLASHER	1				0.06	0.132
020	01025-50616	BOLT	1				0.005	0.011
030	RP201-53710	ASSY REGULATOR	1				0.182	0.4004
040	01025-50620	BOLT	1				0.02	0.044
050	T1060-33720	RELAY STARTER	1				0.02	0.044
060	K3511-55222	CONTROLLER	1				0.18	0.396
070	01025-50620	BOLT	1				0.02	0.044
080	6C040-55852	ASSY SWITCH SAFETY	1				0.124	0.2728
090	67111-55830	NUT SAFETY SWITCH	2				0.035	0.077
100	67111-55840	CAP SAFETY SWITCH	1				0.002	0.0044
110	6C040-55862	WASHER TOOTHED	1				0.004	0.0088
120	52320-42900	SWITCH SAFETY	2				0.1	0.22
130	67111-55830	NUT SAFETY SWITCH	4				0.035	0.077
140	67111-55840	CAP SAFETY SWITCH	2				0.002	0.0044
150	K1122-62280	SWITCH SEAT	2				0.011	0.0242
160	31351-32830	SENSOR THERMO	1				0.02	0.044
170	15531-39010	SWITCH OIL	1				0.032	0.0704

silverhorn.co.uk

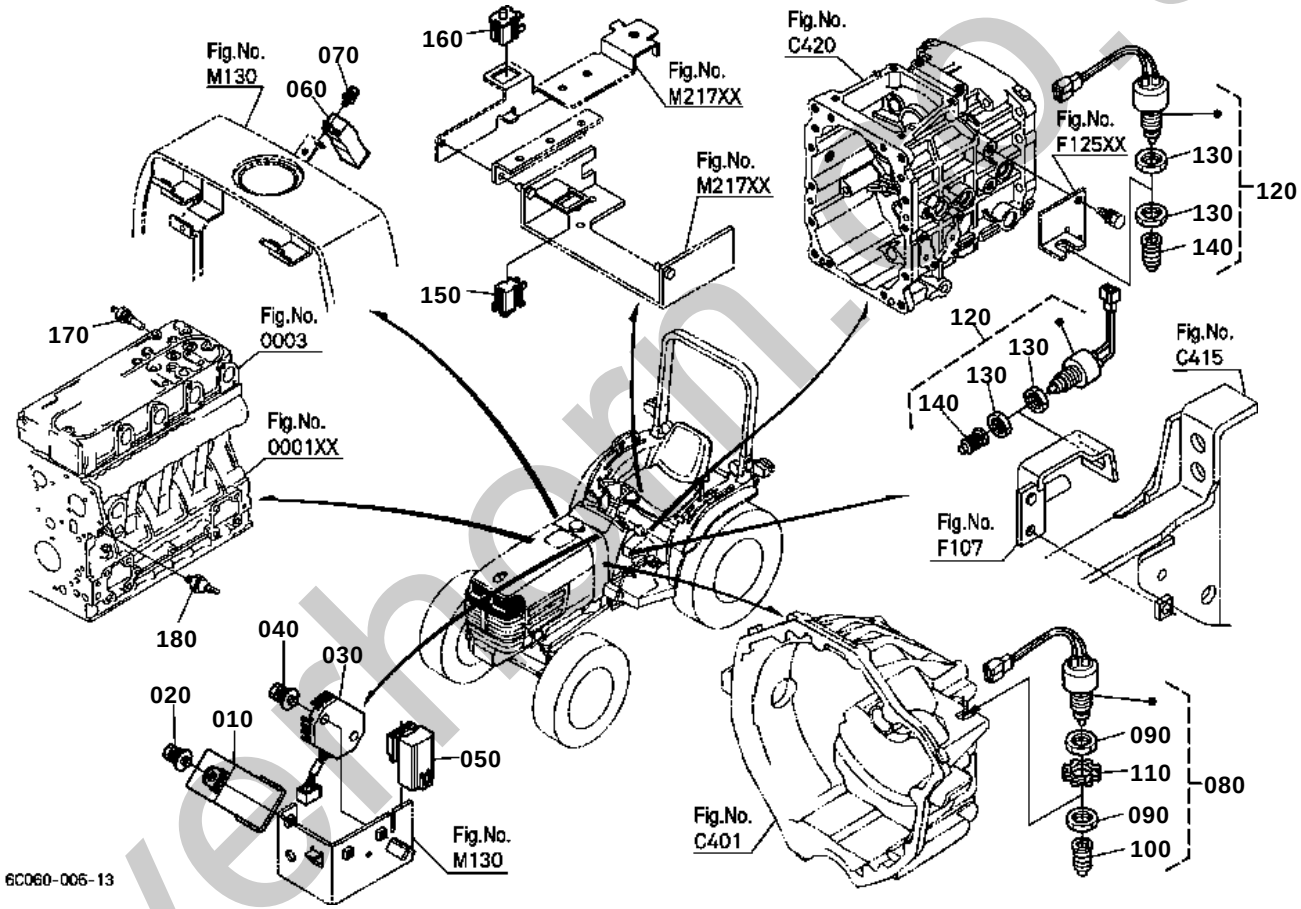

silvershorn.co.uk

SWITCH [EXCEPT MID PTO TYPE]

S.No.;>=57578

↔ Interchangeable; ≠ not interchangeable; ← new for old; → old for new

REF.No	Part No.	Description	Q'ty	S.No.	I/C	REMARKS	Weight (kgf)	Weight (lb)
010	3F240-75430	UNIT FLASHER	1				0.06	0.132
020	01025-50616	BOLT	1				0.005	0.011
030	5H215-41954	ASSY REGULATOR	1	<=60543			0	0
030	5H215-41955	ASSY REGULATOR	1	>=60544	¬		0.187	0.4114
040	01025-50620	BOLT	1				0.02	0.044
050	T1060-33720	RELAY STARTER	1				0.02	0.044
060	6C190-55510	CONTROLLER(OPC)	1				0.06	0.132
070	01023-50616	BOLT	1				0.005	0.011
080	6C040-55852	ASSY SWITCH SAFETY	1				0.124	0.2728
090	67111-55830	NUT SAFETY SWITCH	2				0.035	0.077
100	67111-55840	CAP SAFETY SWITCH	1				0.002	0.0044
110	6C040-55862	WASHER TOOTHED	1				0.004	0.0088
120	52320-42900	SWITCH SAFETY	2				0.1	0.22
130	67111-55830	NUT SAFETY SWITCH	4				0.035	0.077
140	67111-55840	CAP SAFETY SWITCH	2				0.002	0.0044
150	K1122-62280	SWITCH SEAT	1				0.011	0.0242
160	K1122-62280	SWITCH SEAT	1				0.011	0.0242
170	31351-32830	SENSOR THERMO	1				0.02	0.044
180	15531-39010	SWITCH OIL	1				0.032	0.0704

silverhorn.co.uk

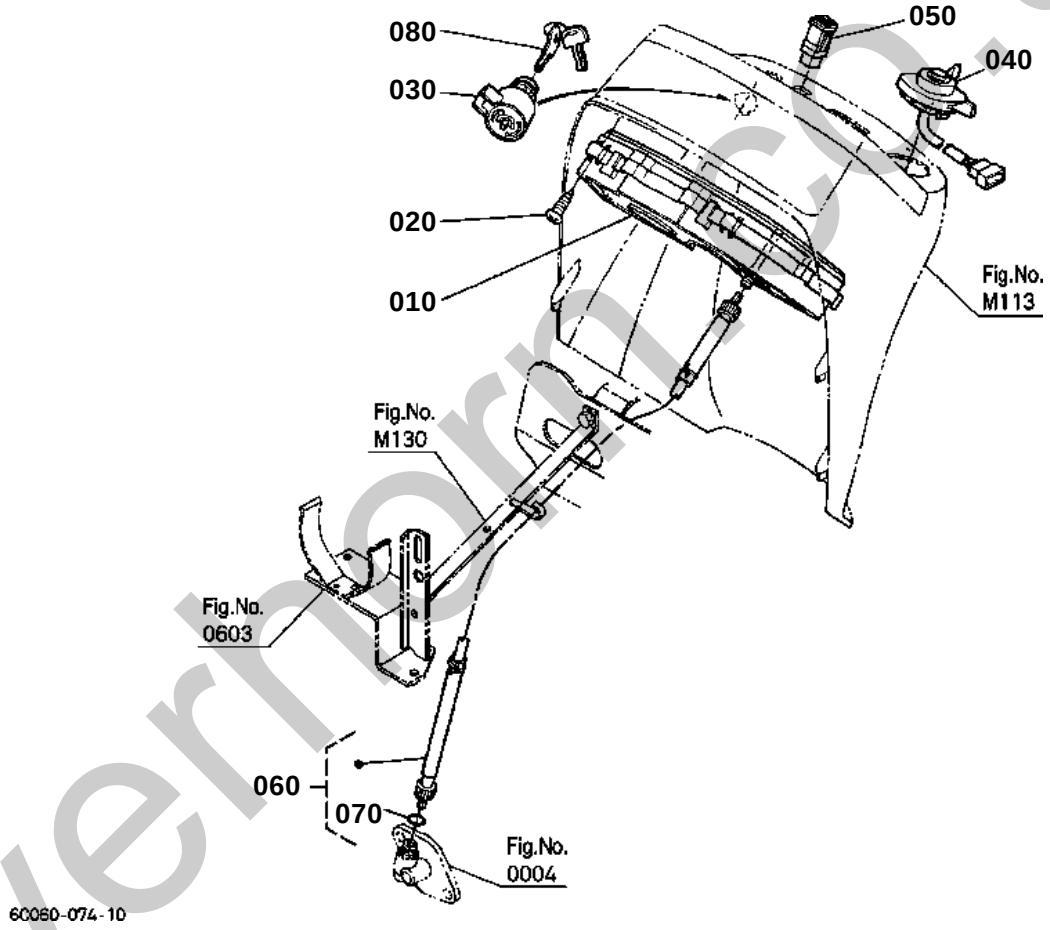

silvermorn.co.uk

PANEL BOARD

↔ Interchangeable; ≠ not interchangeable; ← new for old; → old for new

REF.No	Part No.	Description	Q'ty	S.No.	I/C	REMARKS	Weight (kgf)	Weight (lb)
010	6C140-55100	ASSY METER	1				0.76	1.672
020	03514-50420	SCREW TAPPING	6				0.002	0.0044
030	6C040-55452	SWITCH STARTER	1				0.22	0.484
040	6C070-55420	SWITCH COMBINATION	1				0.08	0.176
050	6C070-55430	SWITCH HAZARD	1				0.019	0.0418
060	35300-99343	CABLE TRACTORMETER	1				0.22	0.484
070	04811-10080	O RING	1				0.001	0.0022
080	15248-63700	KEY STARTER	1			2P/SET	0.034	0.0748

silverhorn.co.uk

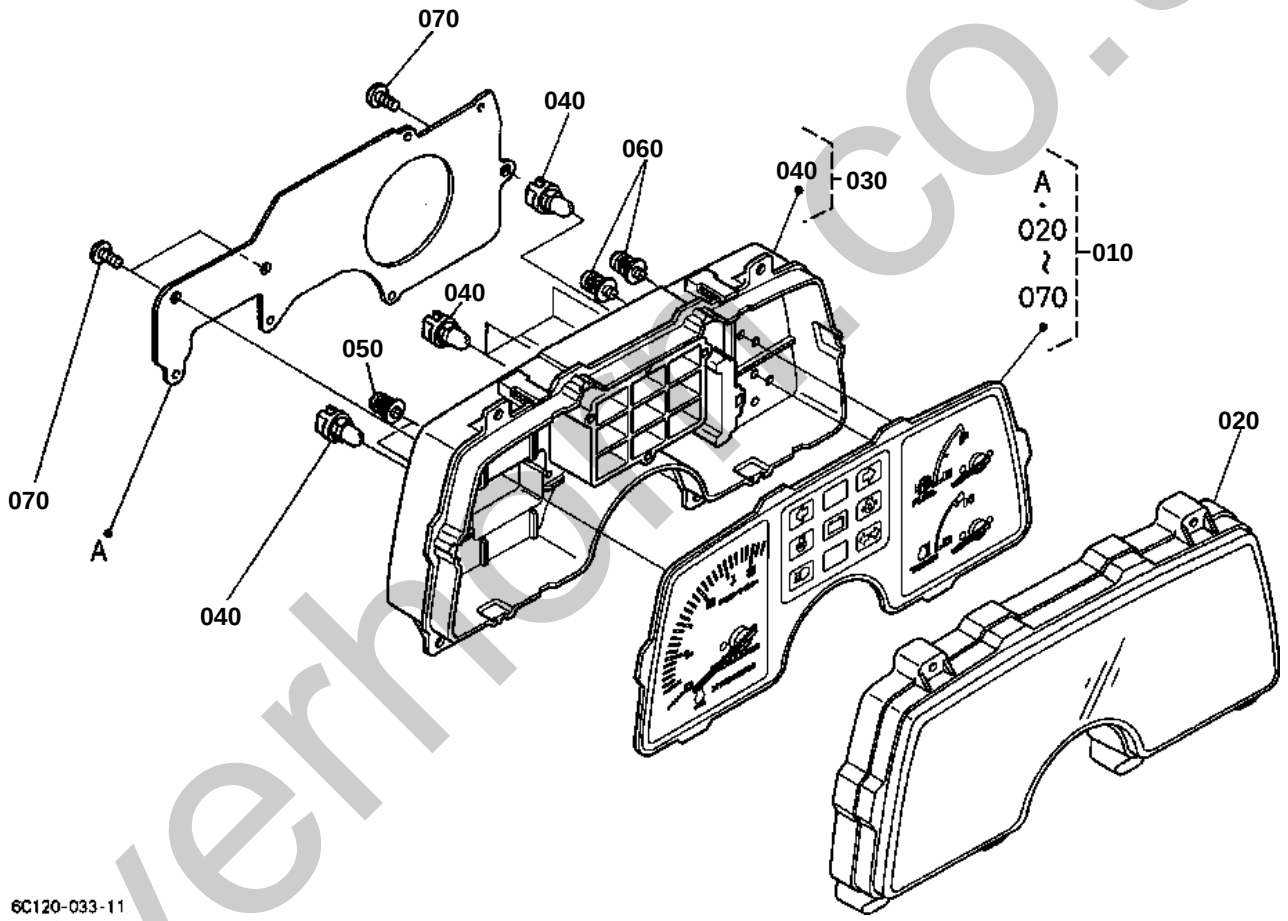

silverhome.co.uk

↔ Interchangeable; ≠ not interchangeable; ← new for old; → old for new

REF.No	Part No.	Description	Q'ty	S.No.	I/C	REMARKS	Weight (kgf)	Weight (lb)
010	6C140-55100	ASSY METER	1				0.76	1.672
020	6C040-55120	GLASS	1				0.16	0.352
030	6C070-55130	ASSY CASE	1				0.28	0.616
040	6C040-55140	ASSY BULB	7			1.7W	0.003	0.0066
050	6C040-55150	SCREW	2				0.002	0.0044
060	6C040-55160	SCREW	6				0.002	0.0044
070	6C040-55180	SCREW	3				0.003	0.0066

silverhorn.co.uk

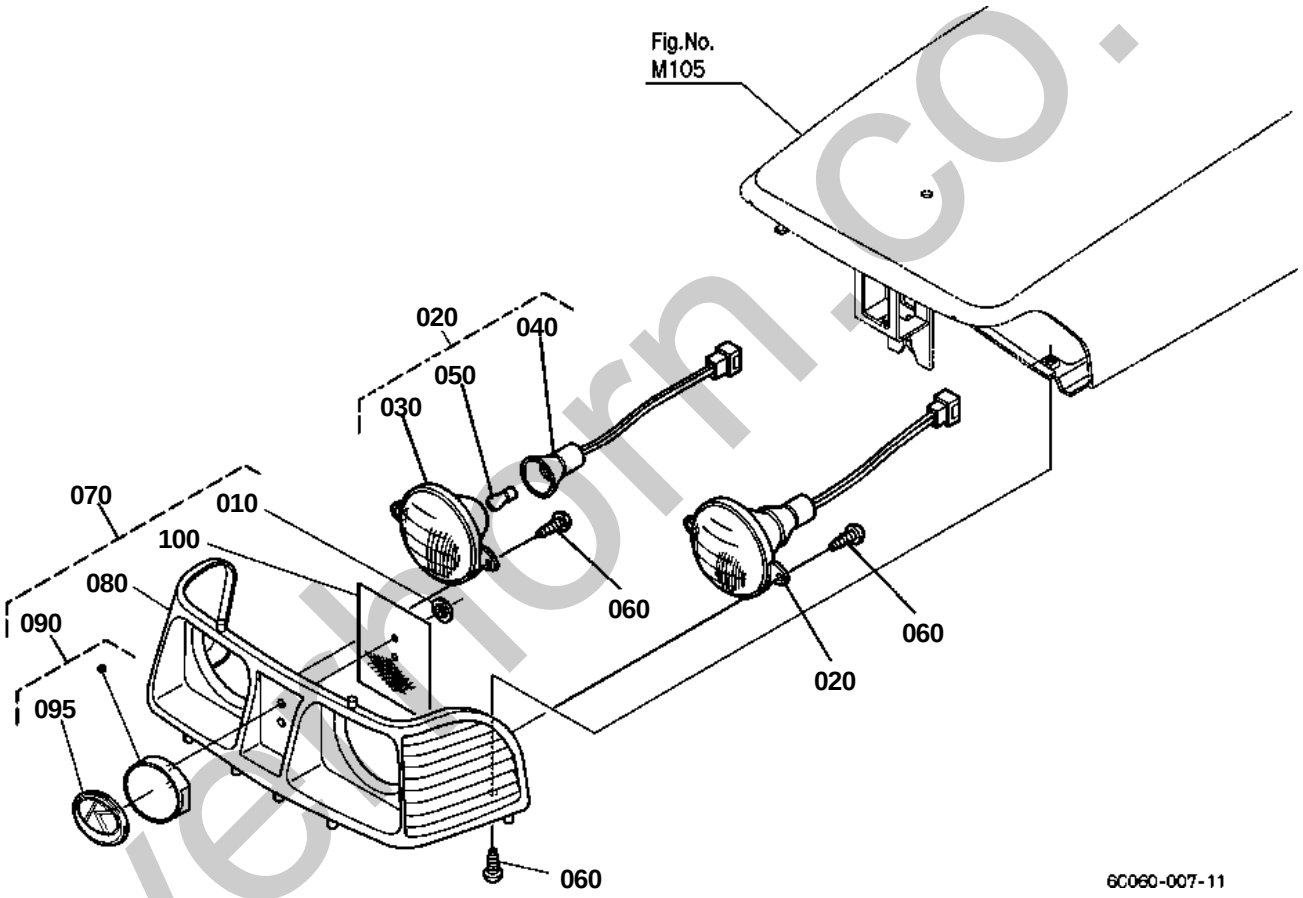

silverthorn.co.uk

HEAD LIGHT

↔ Interchangeable; ≠ not interchangeable; ← new for old; → old for new

REF.No	Part No.	Description	Q'ty	S.No.	I/C	REMARKS	Weight (kgf)	Weight (lb)
010	6A100-54170	NUT	2				0.001	0.0022
020	6C090-55612	ASSY LIGHT HEAD	2				0.18	0.396
030	66591-55614	LAMP HEAD	2				0.06	0.132
040	6C040-55630	COMP.SOCKET	2				0.019	0.0418
050	66591-55630	BULB	2			15W	0.008	0.0176
060	03614-50612	SCREW TAPPING	10				0.003	0.0066
070	6C060-54180	ASSY GRILLE LIGHT	1				0.32	0.704
080	6A100-54370	GRILLE HEAD LIGHT	1				0.28	0.616
090	6C060-54200	MARK SYNBOL	1				0.022	0.0484
095	6C140-54180	MARK SYMBOL	1				0.008	0.0176
100	6C060-54240	NET	1				0.018	0.0396

silverhorn.co.uk

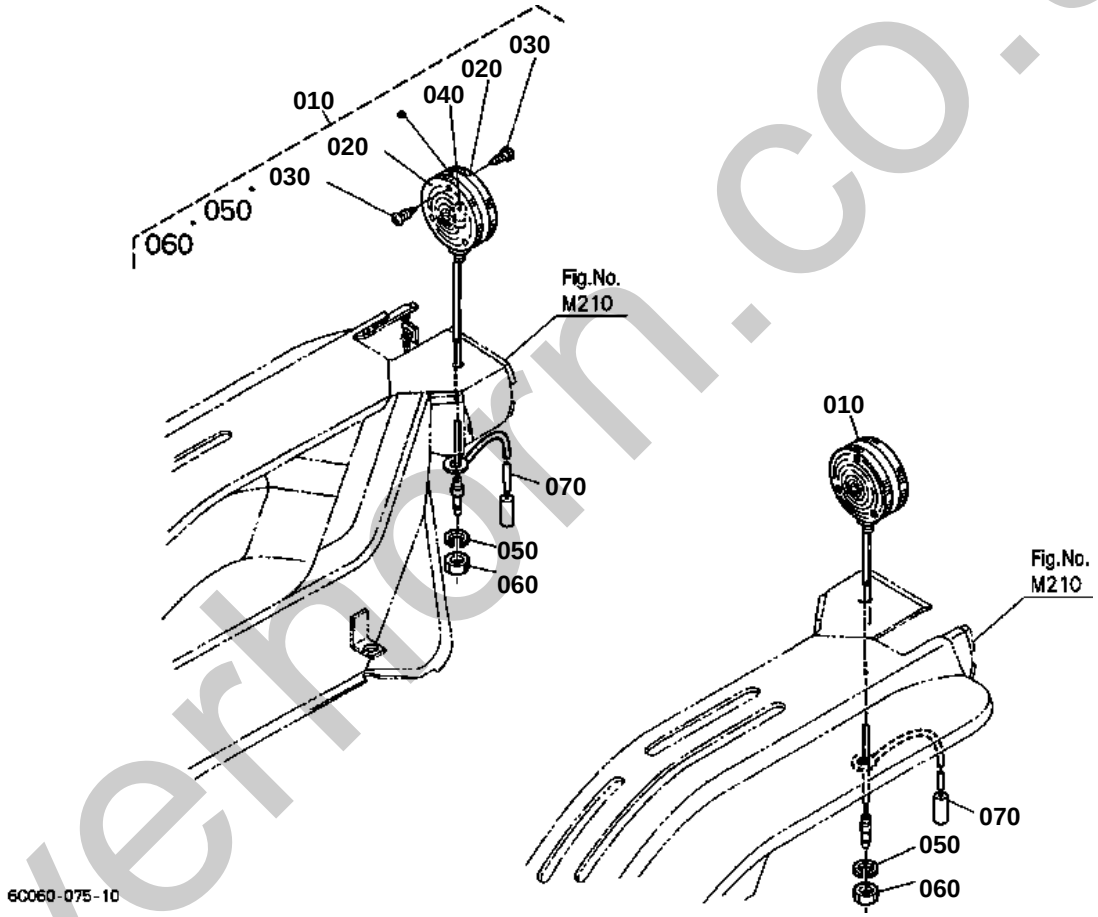

silverhorn.co.uk

HAZARD LIGHT

↔ Interchangeable; ≠ not interchangeable; ← new for old; → old for new

REF.No	Part No.	Description	Q'ty	S.No.	I/C	REMARKS	Weight (kgf)	Weight (lb)
010	32530-33610	ASSY LIGHT HAZARD	2				0.38	0.836
020	32530-91510	LENS HAZARD LIGHT	4				0.085	0.187
030	32530-91520	SCREW TAPPING	12				0.001	0.0022
040	32530-91530	BULB LIGHT	2			27W	0.02	0.044
050	04411-50100	WASHER TOOTHED	2				0.001	0.0022
060	02114-50100	NUT	2				0.005	0.011
070	6C040-55480	WIRE HARNESS	2				0.005	0.011

silverhorn.co.uk

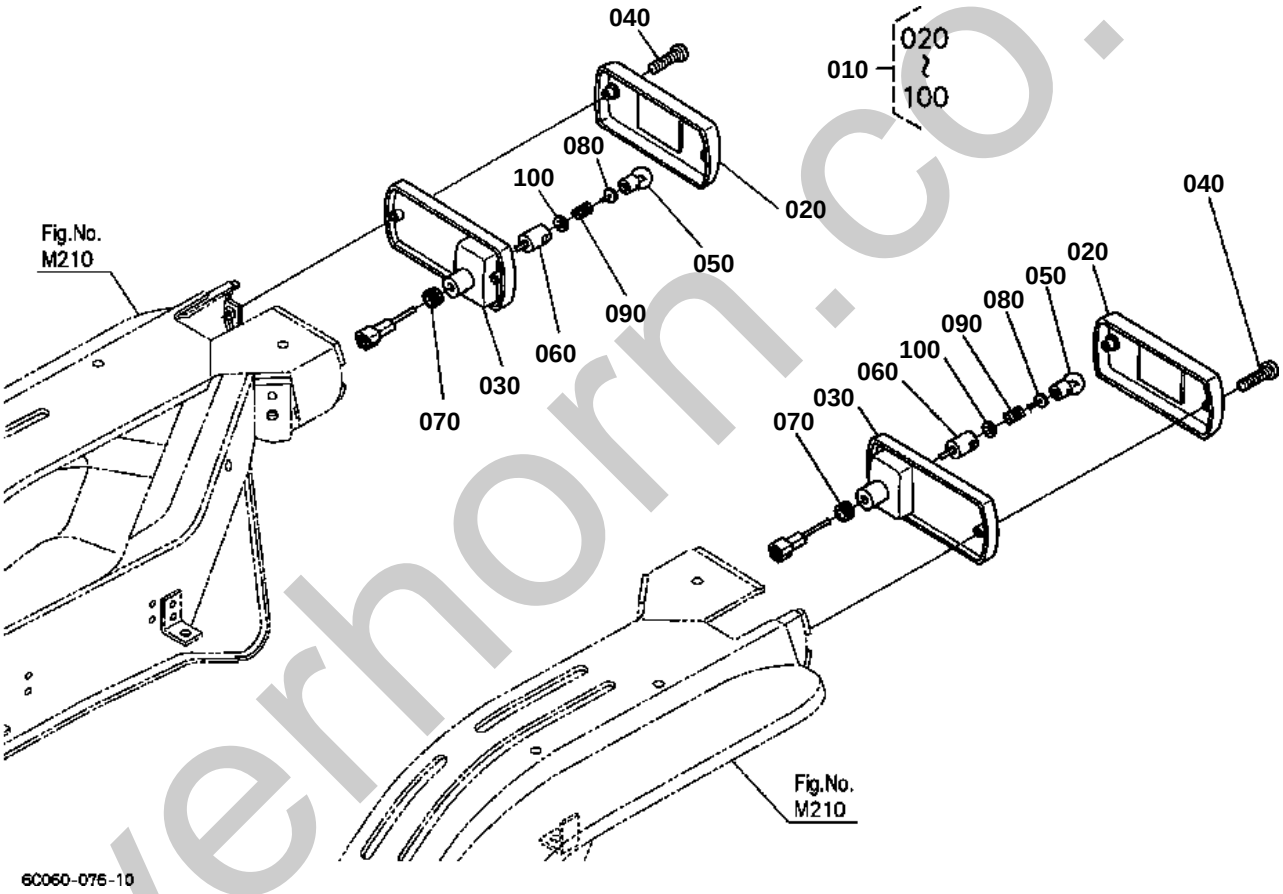

silverhorn.co.uk

TAIL LIGHT

↔ Interchangeable; ≠ not interchangeable; ← new for old; → old for new

REF.No	Part No.	Description	Q'ty	S.No.	I/C	REMARKS	Weight (kgf)	Weight (lb)
010	6C040-55490	ASSY LIGHT TAIL	2				0.21	0.462
020	6C040-92200	ASSY LENS	2				0.1	0.22
030	6C040-92120	BODY	2				0.065	0.143
040	6C040-92140	SCREW	4				0.007	0.0154
050	6C040-92150	BULB	2			8W	0.006	0.0132
060	6C040-92160	SOCKET	2				0.007	0.0154
070	6C040-92170	BUSH RUBBER	2				0.001	0.0022
080	6C040-92180	INSULATOR	2				0.001	0.0022
090	6C040-92190	SPRING	2				0.001	0.0022
100	6C040-92210	WASHER	2				0.001	0.0022

silverhorn.co.uk

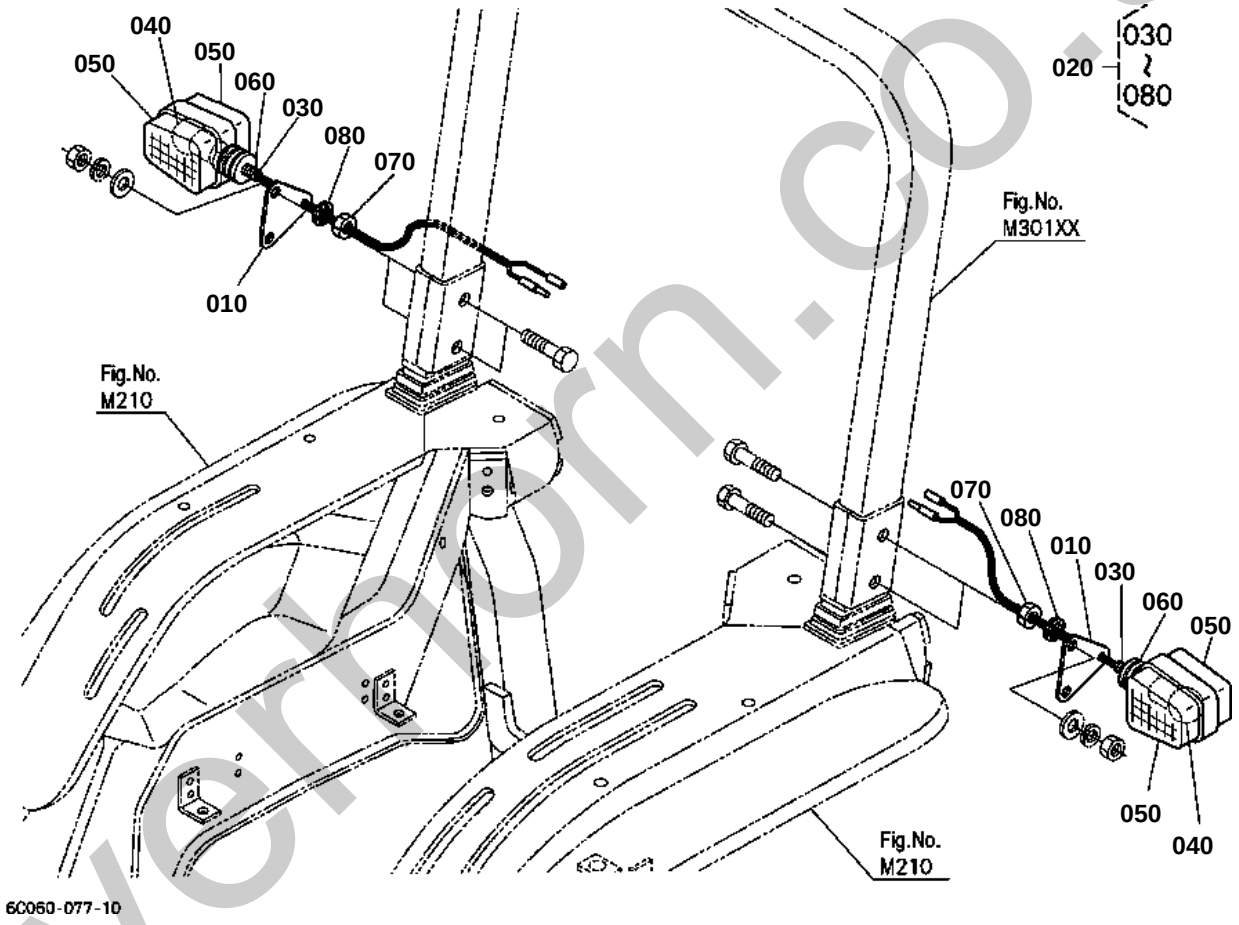

silverhorn.co.uk

WINKER LAMP

↔ Interchangeable; ≠ not interchangeable; ← new for old; → old for new

REF.No	Part No.	Description	Q'ty	S.No.	I/C	REMARKS	Weight (kgf)	Weight (lb)
010	6C140-54980	STAY HAZARD LIGHT	2				0.15	0.33
020	37410-52290	ASSY WINKER LAMP	2				0.145	0.319
030	37410-52710	ASSY BODY	2				0.055	0.121
040	37410-52720	BULB	2			20W	0.02	0.044
050	37410-52730	LENS	4				0.025	0.055
060	37410-52740	GASKET	2				0.025	0.055
070	02116-50100	NUT	2				0.004	0.0088
080	04411-50100	WASHER TOOTHED	2				0.001	0.0022

silverhorn.co.uk

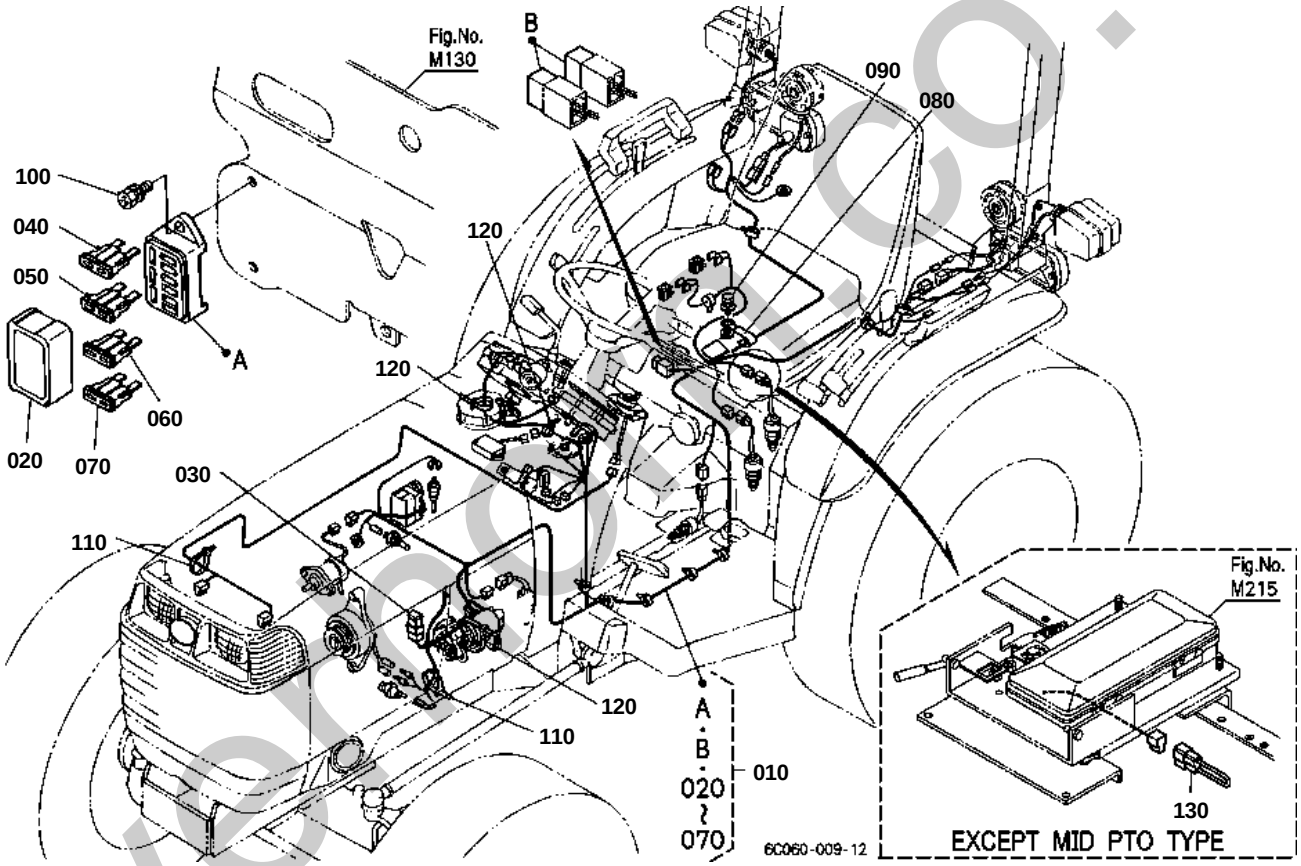

silvermoon.co.uk

OLD PARTS

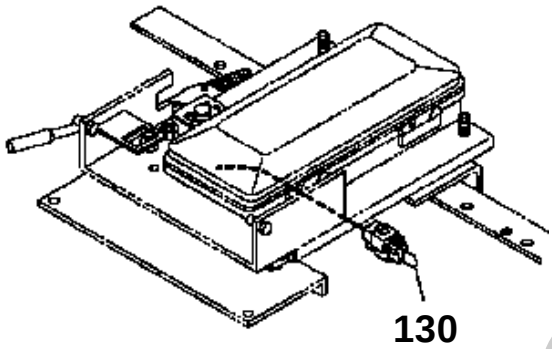

6C060-810-10

silverhorn.co.uk

↔ Interchangeable; ≠ not interchangeable; ← new for old; → old for new

REF.No	Part No.	Description	Q'ty	S.No.	I/C	REMARKS	Weight (kgf)	Weight (lb)
010	6C060-55462	ASSY WIRE HARNESS	1	<=57577			1.41	3.102
010	6C060-55463	ASSY WIRE HARNESS	1	>=57578	1		1.41	3.102
020	6C060-55480	COVER FUSE CASE	1	<=57577			0.001	0.0022
020	6C060-55482	COVER FUSE CASE	1	>=57578	1		0.001	0.0022
030	1G111-65720	FUSE	1			30A	0.009	0.0198
040	66426-80010	FUSE AUTO	2			5A	0.01	0.022
050	36730-75550	FUSE	3			10A	0.001	0.0022
050	48100-55880	FUSE AUTO	3		«	10A	0.01	0.022
060	36919-56650	FUSE AUTO	2			20A	0.002	0.0044
070	52300-41630	FUSE AUTO	1			30A	0.01	0.022
080	13824-67580	CLAMP CORD	1				0.006	0.0132
090	01125-60816	BOLT	1				0.01	0.022
100	01202-50620	BOLT	2				0.007	0.0154
110	53581-64150	BAND CORD	2				0.002	0.0044
120	55311-41260	BAND CORD	3				0.007	0.0154
130	6C060-55490	COUPLER	1	<=65289			0.004	0.0088
130	67111-55190	RING FUSIBLE	1	>=65290	¬		0.005	0.011

silverhorn.co.uk

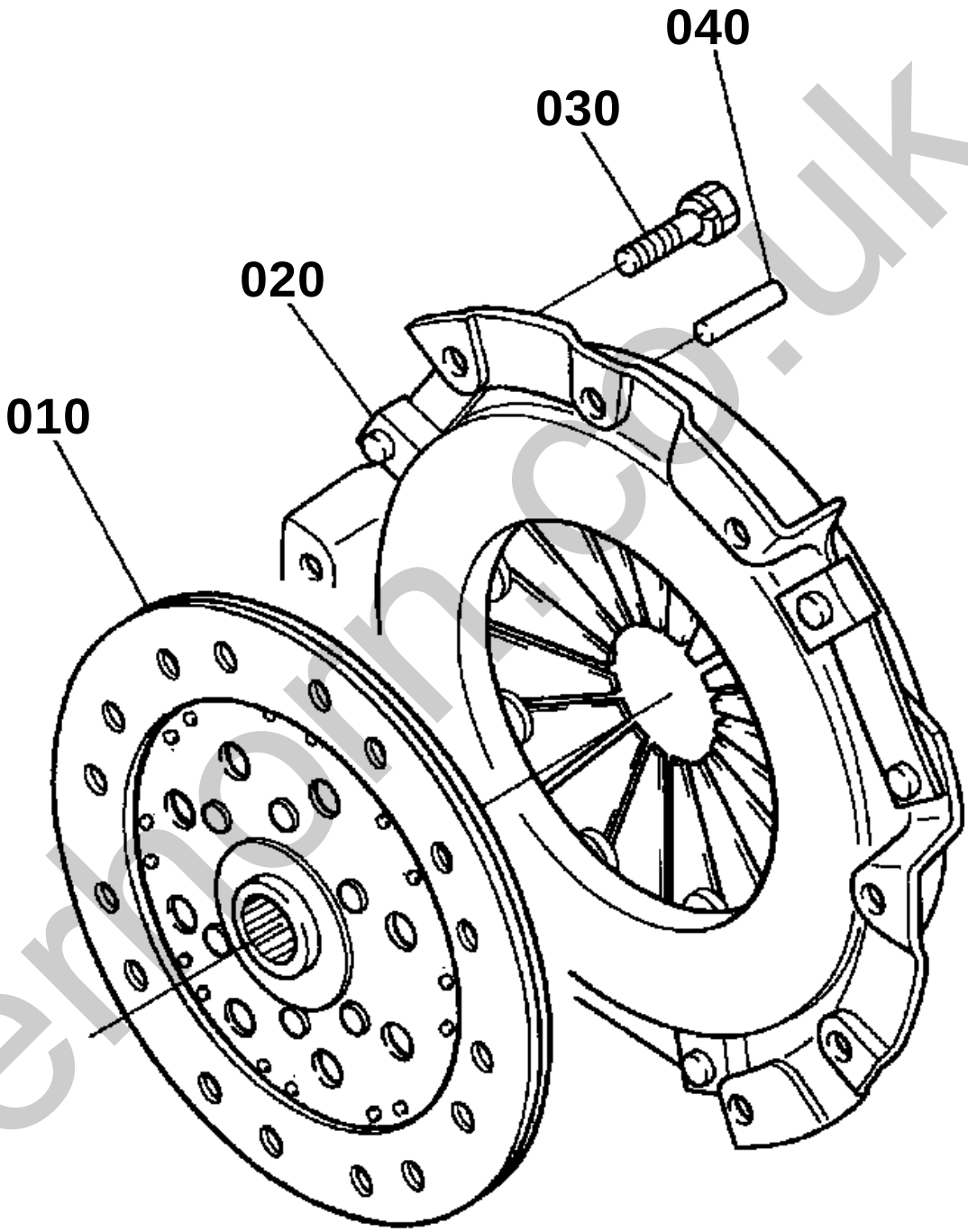

16216-001-10

silvermorn.co.uk

CLUTCH

↔ Interchangeable; ≠ not interchangeable; ← new for old; → old for new

REF.No	Part No.	Description	Q'ty	S.No.	I/C	REMARKS	Weight (kgf)	Weight (lb)
010	6C040-13402	COMP.DISK CLUTCH	1				0.88	1.936
020	6C040-13300	COMP.PLATE PRESSURE	1				4.01	8.822
030	01123-60816	BOLT	6				0.01	0.022
040	05012-00814	PIN STRAIGHT	3				0.006	0.0132

silverhorn.co.uk

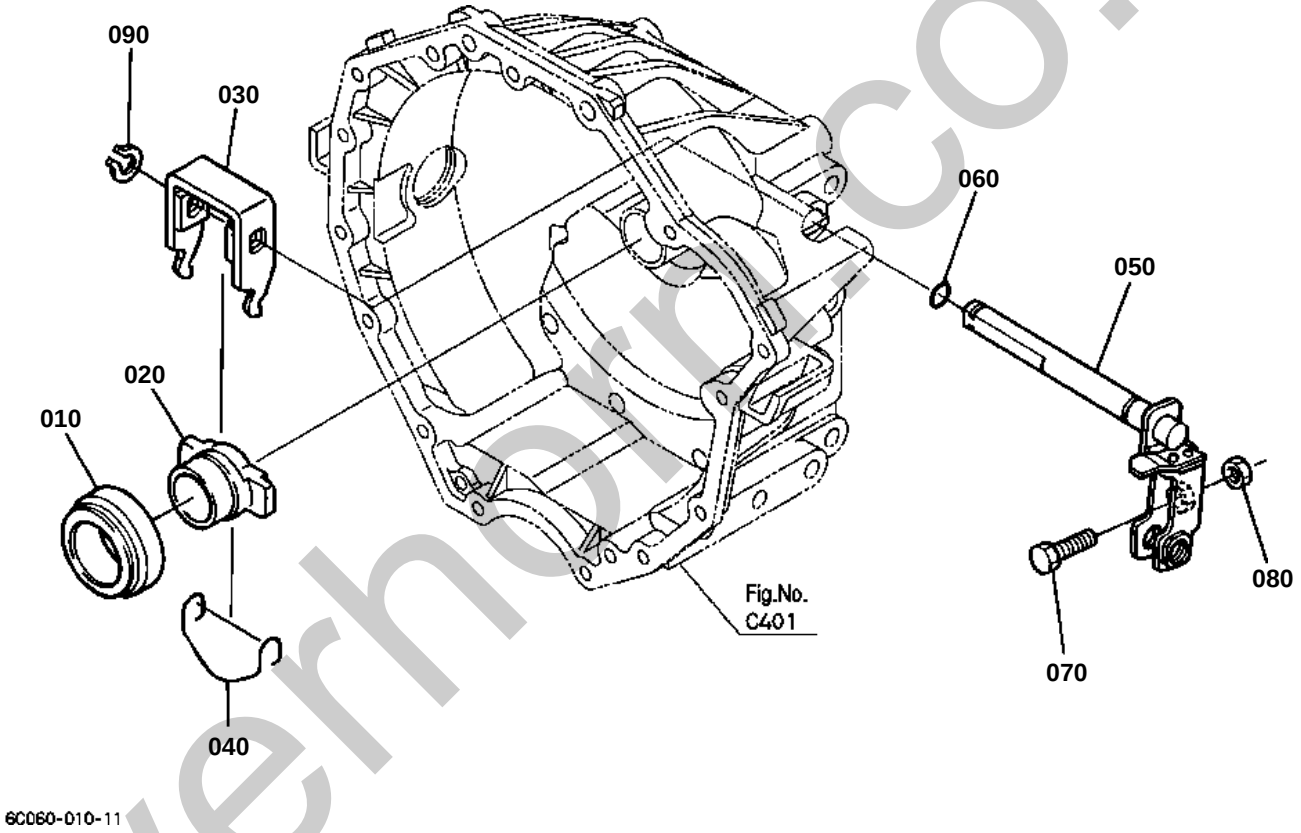

silverhorn.co.uk

CLUTCH ROD

↔ Interchangeable; ≠ not interchangeable; ← new for old; → old for new

REF.No	Part No.	Description	Q'ty	S.No.	I/C	REMARKS	Weight (kgf)	Weight (lb)
010	6C040-13210	BEARING RELEASE	1				0.157	0.3454
020	6C040-13220	HOLDER BEARING	1				0.142	0.3124
030	6C040-13230	FORK CLUTCH RELEASE	1				0.22	0.484
040	6C040-13240	SPRING	1				0.003	0.0066
050	6C040-13257	SHAFT CLUTCH ROD	1				0.037	0.0814
060	04811-10140	O RING	1				0.001	0.0022
070	66711-13320	BOLT ADJUSTING	1				0.028	0.0616
080	02118-50100	NUT	1				0.005	0.011
090	04612-00160	CIR CLIP EXTERNAL	1				0.001	0.0022

silverhorn.co.uk

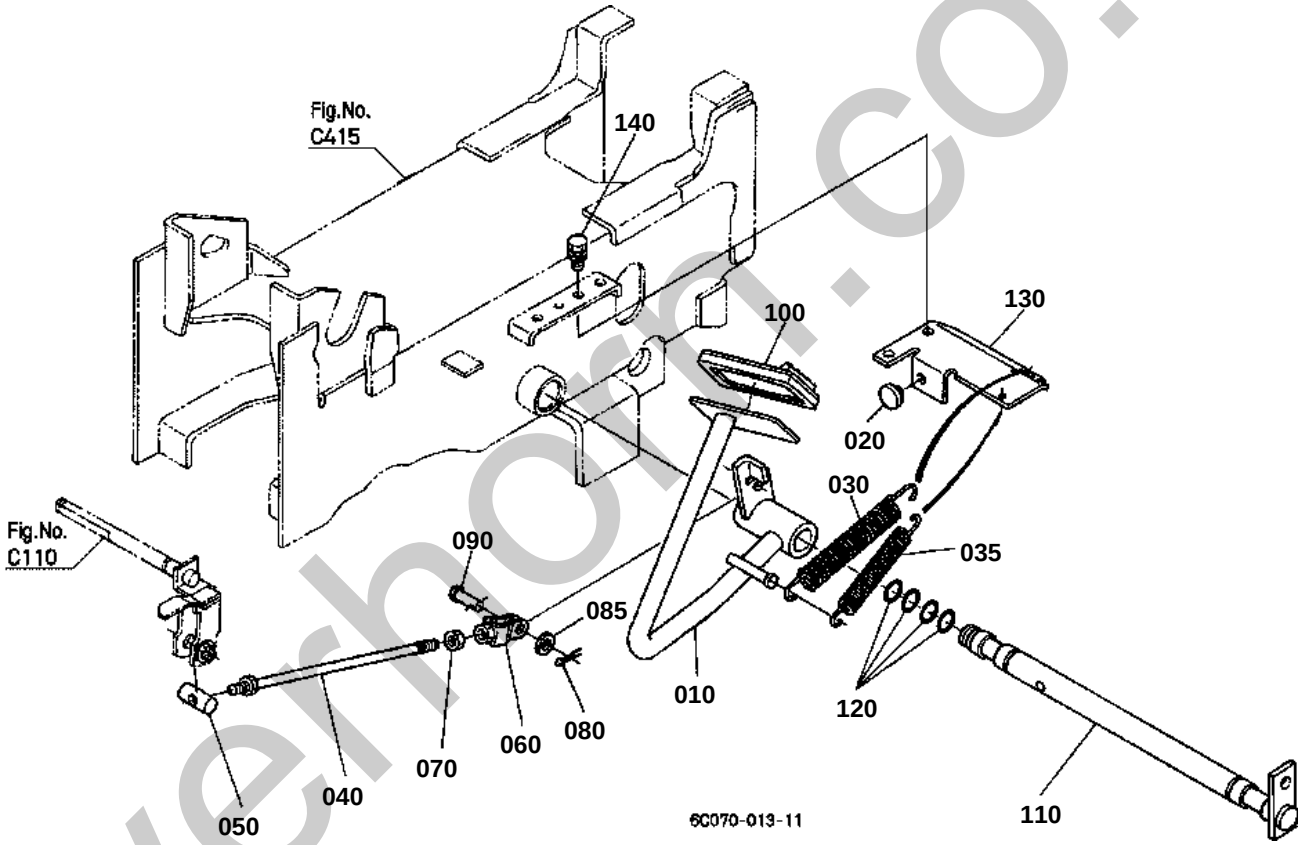

silverhorn.co.uk

CLUTCH PEDAL

↔ Interchangeable; ≠ not interchangeable; ← new for old; → old for new

REF.No	Part No.	Description	Q'ty	S.No.	I/C	REMARKS	Weight (kgf)	Weight (lb)
010	6C070-42130	PEDAL CLUTCH	1				1.8	3.96
020	38240-29870	CUSHION	1				0.004	0.0088
030	6C040-42150	SPRING	1				0.157	0.3454
035	6C040-42160	SPRING	1				0.05	0.11
040	6C040-42113	ROD CLUTCH	1				0.255	0.561
050	6C040-42142	PIN CLUTCH ROD	1				0.034	0.0748
060	6C040-42120	U JOINT	1				0.118	0.2596
070	37720-28990	NUT	1				0.008	0.0176
080	05511-50322	PIN SPLIT	1				0.002	0.0044
085	04013-60100	WASHER PLAIN	1				0.003	0.0066
090	05122-51025	PIN JOINT	1				0.017	0.0374
100	37410-44120	COVER PEDAL	1	<=60543			0	0
100	T2050-44120	COVER PEDAL	1	>=60544	¬		0.07	0.154
110	6C040-42310	SHAFT PEDAL	1				1.68	3.696
120	04816-00210	O RING	4				0.004	0.0088
130	6C070-42170	STAY CLUTCH PEDAL	1				0.46	1.012
140	01123-50820	BOLT	2				0.011	0.0242

silverhorn.co.uk

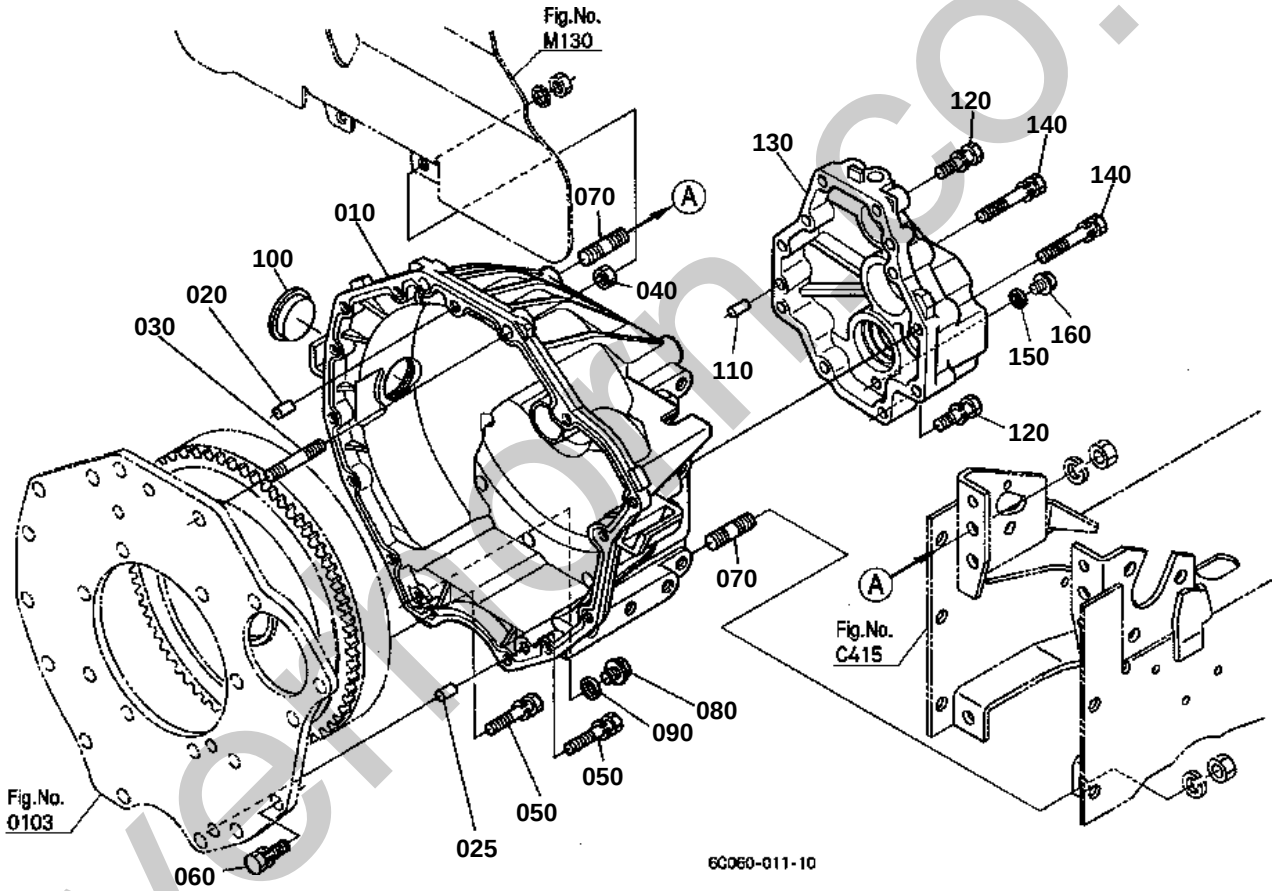

silverthorn.co.uk

CLUTCH HOUSING

↔ Interchangeable; ≠ not interchangeable; ← new for old; → old for new

REF.No	Part No.	Description	Q'ty	S.No.	I/C	REMARKS	Weight (kgf)	Weight (lb)
010	6C040-13114	HOUSING CLUTCH	1				5.2	11.44
020	05012-00814	PIN STRAIGHT	1				0.006	0.0132
025	66611-11160	PIN KNOCK	1				0.01	0.022
030	01517-51045	STUD	2				0.032	0.0704
040	02118-50100	NUT	2				0.005	0.011
050	01123-50845	BOLT	2				0.02	0.044
060	01123-50830	BOLT	9				0.015	0.033
070	01555-51225	STUD	4				0.039	0.0858
080	01754-50812	BOLT FLANGE	1				0.01	0.022
090	04717-00800	WASHER WITH RUBBER	1				0.001	0.0022
100	37410-13124	PLUG	1				0.02	0.044
110	05012-00614	PIN STRAIGHT	2				0.004	0.0088
120	01123-50835	BOLT	4				0.02	0.044
130	6C140-13120	COVER CLUTCH HOUSING	1				1.06	2.332
140	01123-50850	BOLT	6				0.02	0.044
150	04717-01000	WASHER WITH RUBBER	1				0.001	0.0022
160	01774-51010	BOLT FLANGE	1				0.08	0.176

silverhorn.co.uk

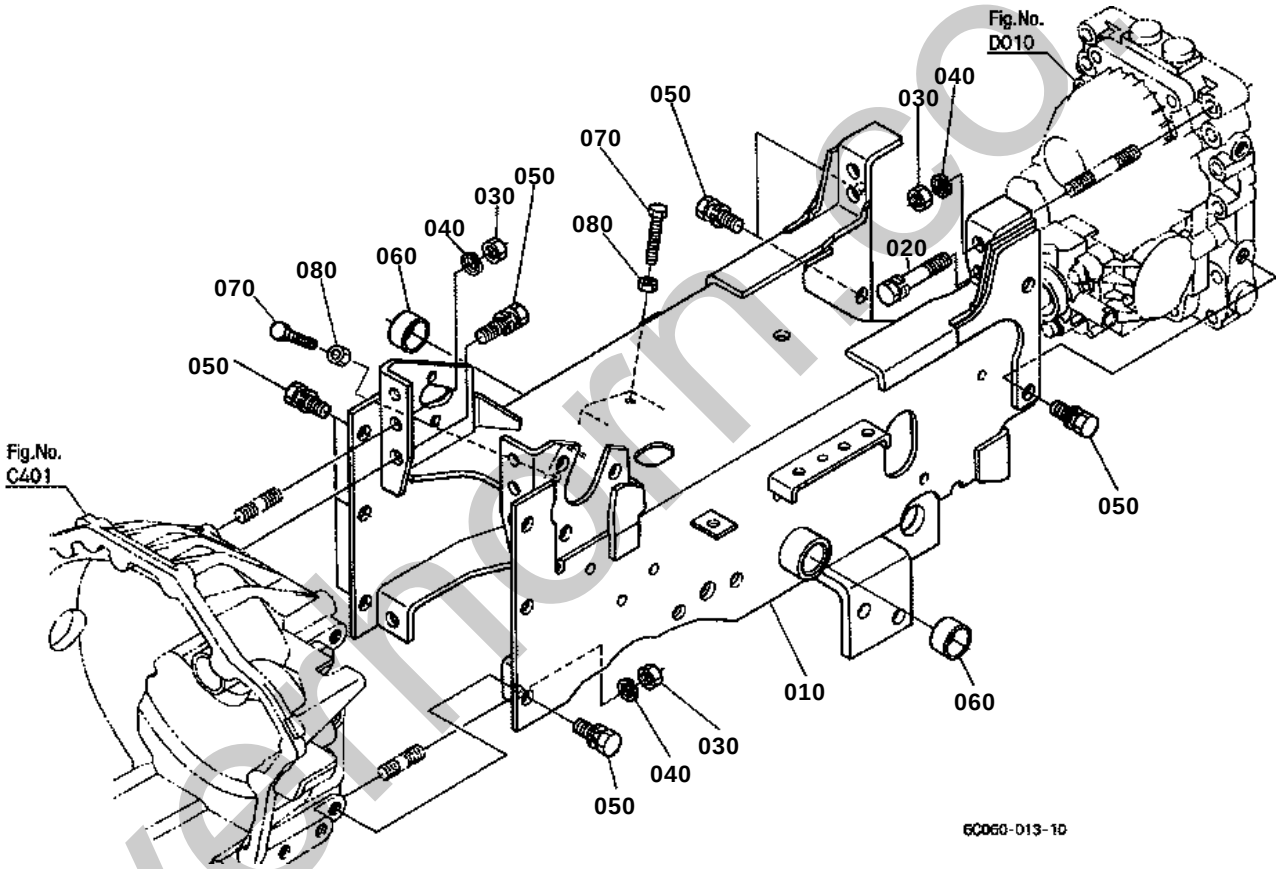

silvermarine.co.uk

CENTER FRAME

↔ Interchangeable; ≠ not interchangeable; ← new for old; → old for new

REF.No	Part No.	Description	Q'ty	S.No.	I/C	REMARKS	Weight (kgf)	Weight (lb)
010	6C070-51117	COMP.FRAME CENTER	1				22	48.4
020	01123-51265	BOLT	2				0.063	0.1386
030	02174-50120	NUT	8				0.01	0.022
040	04512-60120	WASHER SPRING	8				0.005	0.011
050	01123-51230	BOLT	12				0.04	0.088
060	08511-02515	BUSH	2				0.012	0.0264
070	01155-50845	BOLT	2				0.02	0.044
080	02114-50080	NUT	2				0.005	0.011

silverhorn.co.uk

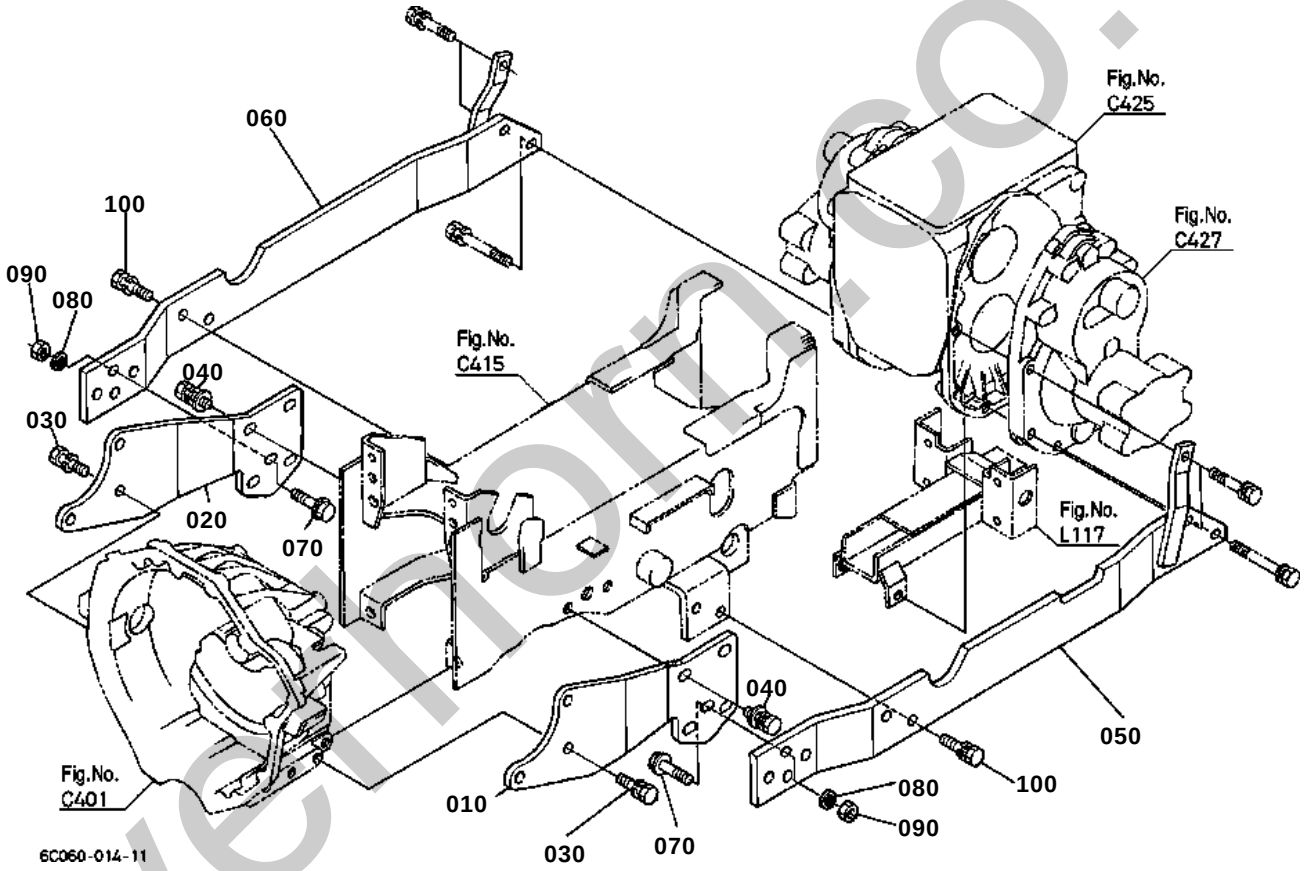

silvethorn.co.uk

SUB FRAME

↔ Interchangeable; ≠ not interchangeable; ← new for old; → old for new

REF.No	Part No.	Description	Q'ty	S.No.	I/C	REMARKS	Weight (kgf)	Weight (lb)
010	6C070-51152	BRACKET SUB FRAME L	1				0.27	0.594
020	6C070-51162	BRACKET SUB FRAME R	1				2.7	5.94
030	01123-51235	BOLT	6				0.041	0.0902
040	01135-61230	BOLT	4				0.05	0.11
050	6C070-51132	SUB FRAME L	1				5.3	11.66
060	6C070-51142	SUB FRAME R	1				5.3	11.66
070	01774-51240	BOLT FLANGE	6				0.05	0.11
080	04512-60120	WASHER SPRING	6				0.005	0.011
090	02174-50120	NUT	6				0.01	0.022
100	01133-51240	BOLT	4				0.05	0.11

silverhorn.co.uk

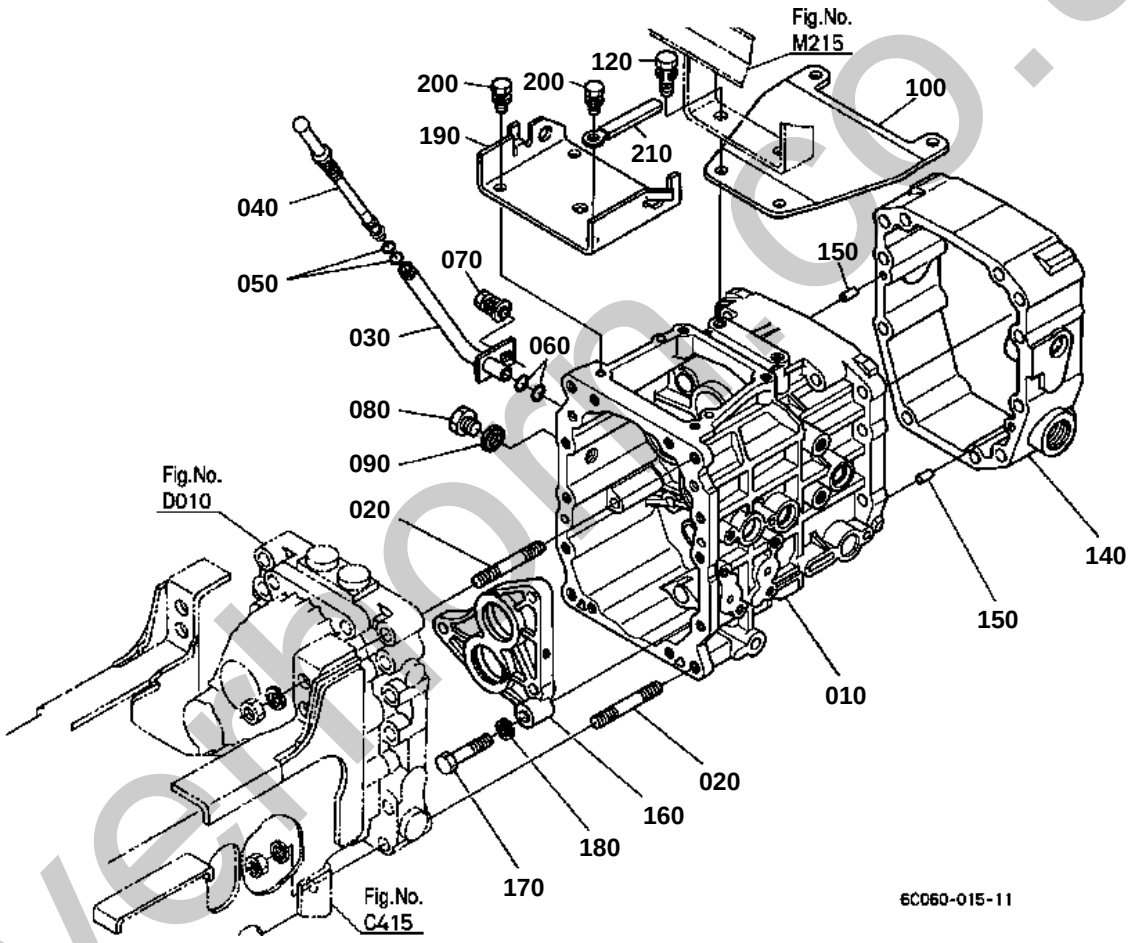

silverthorn.co.uk

TRANSMISSION CASE

↔ Interchangeable; ≠ not interchangeable; ← new for old; → old for new

REF.No	Part No.	Description	Q'ty	S.No.	I/C	REMARKS	Weight (kgf)	Weight (lb)
010	6C170-11110	CASE TRANSMISSION	1				5	11
020	01555-51260	STUD	4				0.067	0.1474
030	6A320-11152	PIPE OIL GAUGE	1				0.078	0.1716
040	6C040-11160	GAUGE OIL	1				0.01	0.022
050	04816-00060	O RING	2				0.001	0.0022
060	04816-00120	O RING	2				0.001	0.0022
070	01125-60820	BOLT	1				0.015	0.033
080	06311-55030	PLUG	1				0.05	0.11
090	04717-01700	WASHER WITH RUBBER	1				0.003	0.0066
100	6C070-11180	BRACKET	1				0.76	1.672
110	99999-99999	BLANK	0				0	0
120	01123-51030	BOLT	2				0.025	0.055
130	99999-99999	BLANK	0				0	0
140	6C170-11130	CASE.SUB TRANSMISSI.	1				4.8	10.56
150	05012-00614	PIN STRAIGHT	2				0.004	0.0088
160	6C050-12110	HOLDER BEARING	1				0.23	0.506
170	6C050-12120	BOLT REAMER	3				0.036	0.0792
180	04512-60100	WASHER SPRING	3				0.002	0.0044
190	6C050-12412	COVER UPPER	1				0.76	1.672
200	01123-50820	BOLT	4				0.011	0.0242
210	13824-67580	CLAMP CORD	1				0.006	0.0132
210	13824-67590	CLAMP CORD	1		«		0.002	0.0044

silverhorn.co.uk

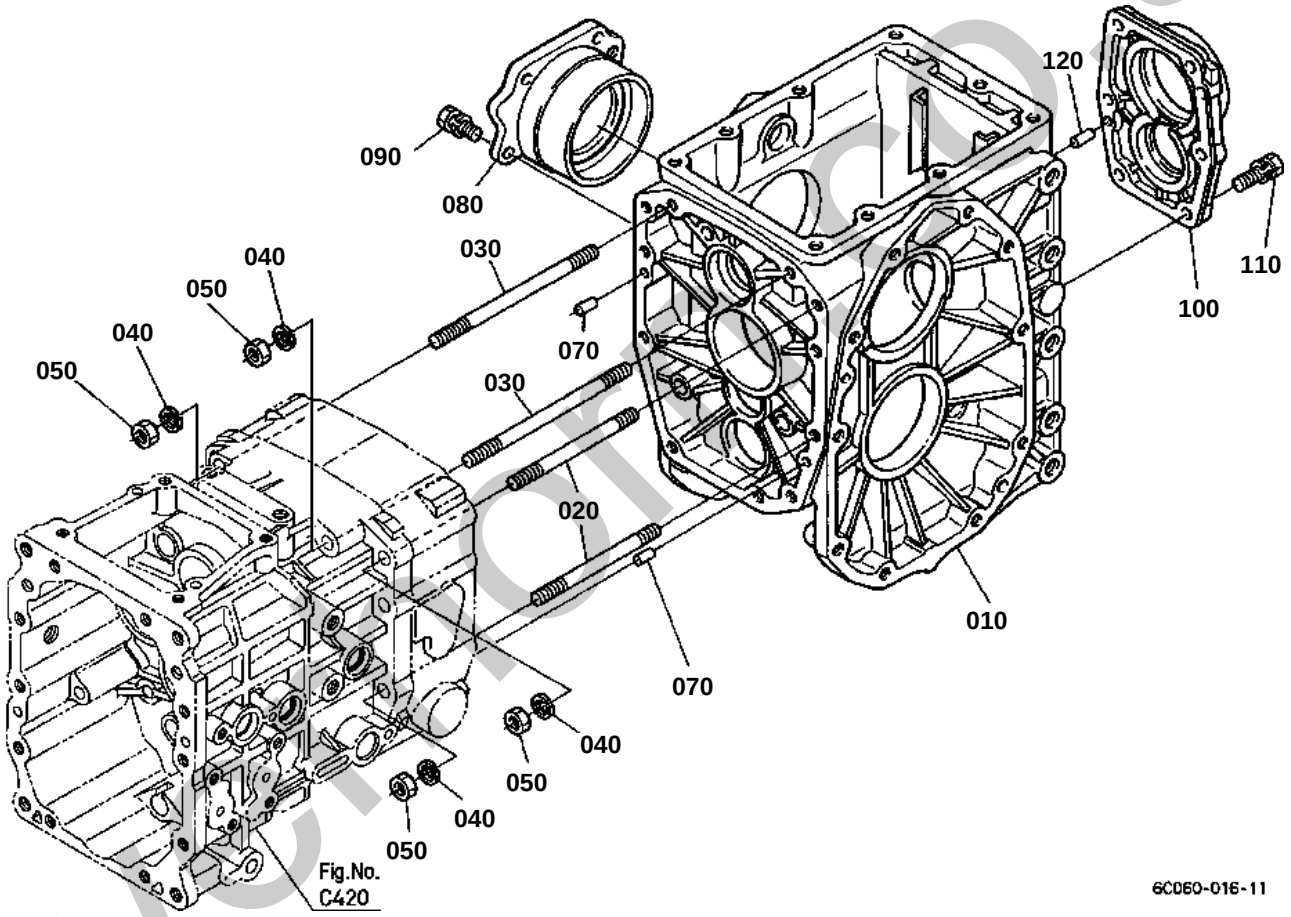

silvermoto.co.uk

DIFFERENTIAL GEAR CASE

↔ Interchangeable; ≠ not interchangeable; ← new for old; → old for new

REF.No	Part No.	Description	Q'ty	S.No.	I/C	REMARKS	Weight (kgf)	Weight (lb)
010	6C040-11174	CASE DIFF.GEAR	1				7.3	16.06
020	01555-51000	STUD	9				0.068	0.1496
030	6C070-11140	STUD	2				0.09	0.198
040	04512-60100	WASHER SPRING	11				0.002	0.0044
050	02176-50100	NUT	11				0.005	0.011
060	99999-99999	BLANK	0				0	0
070	05012-00614	PIN STRAIGHT	2				0.004	0.0088
080	66611-11812	HOLDER DIFF.BRG.RH	1				0.72	1.584
090	01123-50822	BOLT	4				0.012	0.0264
100	6A100-12213	COVER REAR	1				0.37	0.814
110	01123-51030	BOLT	6				0.025	0.055
120	05012-00614	PIN STRAIGHT	2				0.004	0.0088

silverhorn.co.uk

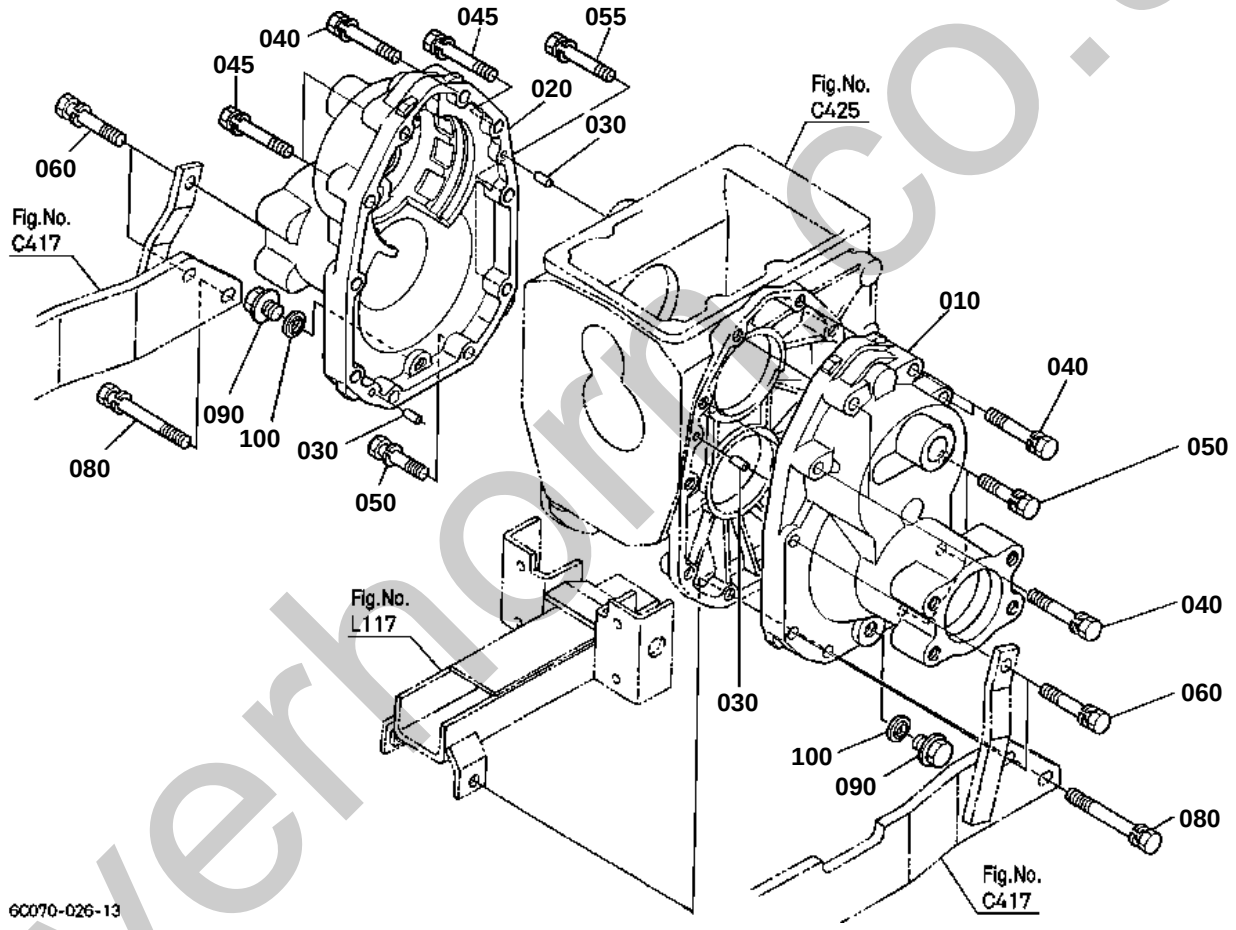

silverhorn.co.uk

REAR AXLE CASE

↔ Interchangeable; ≠ not interchangeable; ← new for old; → old for new

REF.No	Part No.	Description	Q'ty	S.No.	I/C	REMARKS	Weight (kgf)	Weight (lb)
010	6C070-12610	CASE AXLE LH	1				7.6	16.72
020	6C070-12620	CASE AXLE RH	1				7.5	16.5
030	05012-00614	PIN STRAIGHT	4				0.004	0.0088
040	01123-51065	BOLT	5				0.04	0.088
045	01123-51065	BOLT	3				0.04	0.088
050	01123-51050	BOLT	5				0.035	0.077
055	01123-51050	BOLT	1				0.035	0.077
060	01123-51060	BOLT	4				0.05	0.11
070	99999-99999	BLANK	0				0	0
080	01133-51090	BOLT	2				0.056	0.1232
090	01774-51212	BOLT FLANGE	2				0.028	0.0616
100	04717-01200	WASHER WITH RUBBER	2				0.002	0.0044

silverhorn.co.uk

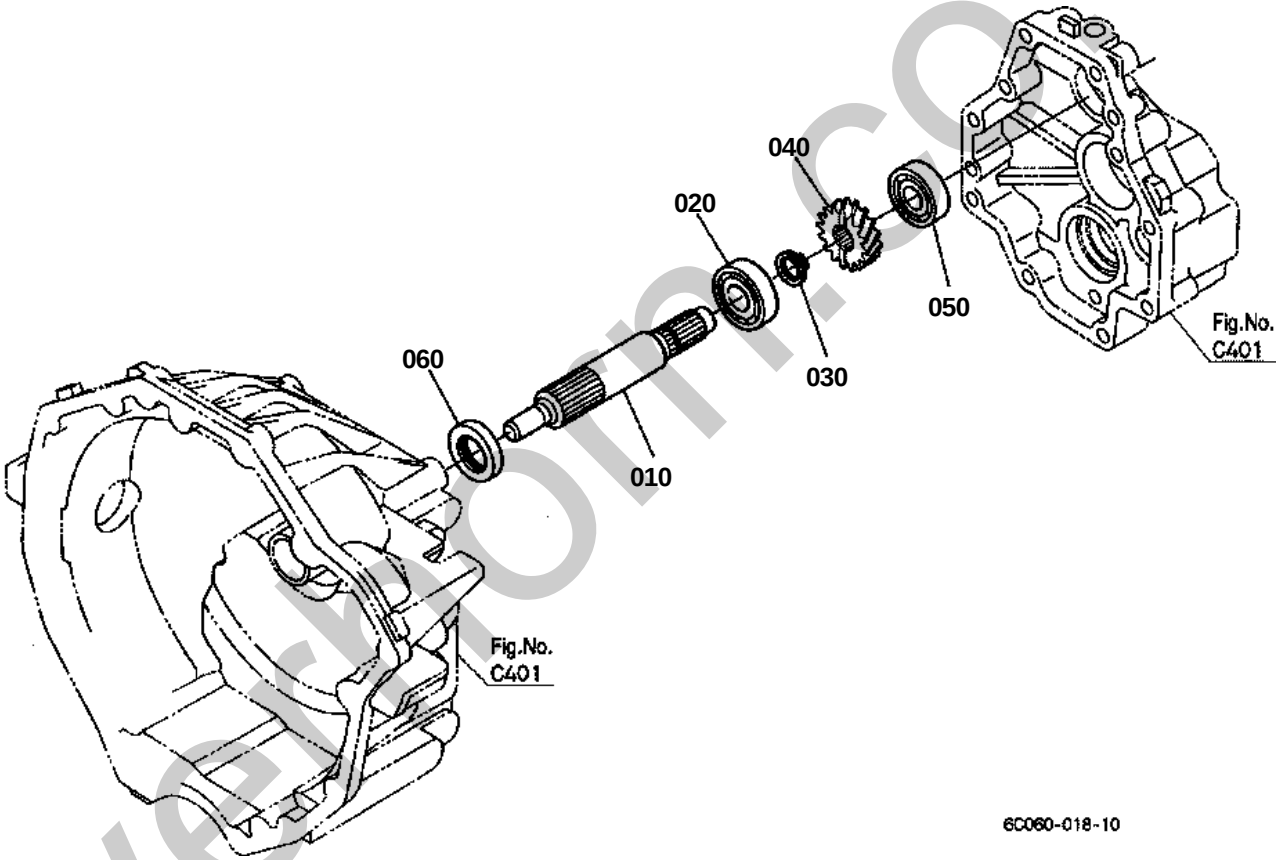

silverfrom.co.uk

CLUTCH SHAFT

↔ Interchangeable; ≠ not interchangeable; ← new for old; → old for new

REF.No	Part No.	Description	Q'ty	S.No.	I/C	REMARKS	Weight (kgf)	Weight (lb)
010	6C040-13514	SHAFT CLUTCH	1				0.5	1.1
020	52300-16180	BEARING	1				0.103	0.2266
030	04612-00200	CIR CLIP EXTERNAL	1				0.001	0.0022
040	6C040-13520	GEAR CLUTCH SHAFT	1			16T	0.165	0.363
050	08101-06203	BEARING BALL	1				0.063	0.1386
060	6C040-13530	SEAL OIL	1				0.012	0.0264

silverhorn.co.uk

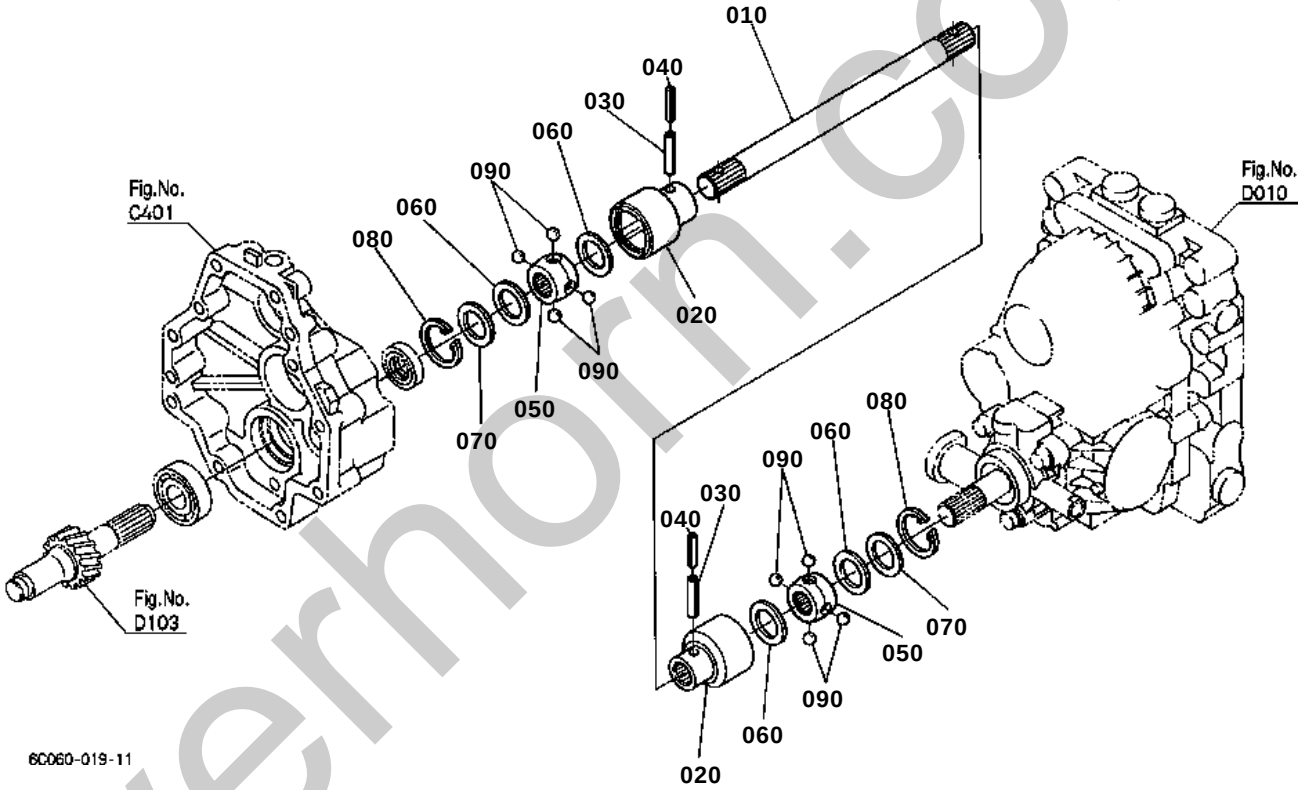

silverhorn.co.uk

PROPELLER SHAFT

↔ Interchangeable; ≠ not interchangeable; ← new for old; → old for new

REF.No	Part No.	Description	Q'ty	S.No.	I/C	REMARKS	Weight (kgf)	Weight (lb)
010	6C050-13723	SHAFT PROPELLER	1				0.64	1.408
020	67111-13710	COUPLING BALL OUTER	2				0.225	0.495
030	05411-00640	PIN SPRING	2				0.006	0.0132
040	32721-57680	PIN SPRING	2				0.002	0.0044
050	67211-14133	COUPLING BALL INNER	2				0.075	0.165
060	67111-13730	GASKET BALL JOINT	4				0.002	0.0044
070	67111-13740	SUPPORT GASKET	2				0.004	0.0088
080	04611-00350	CIR CLIP INTERNAL	2				0.003	0.0066
090	07715-00803	BALL	8				0.004	0.0088

silverhorn.co.uk

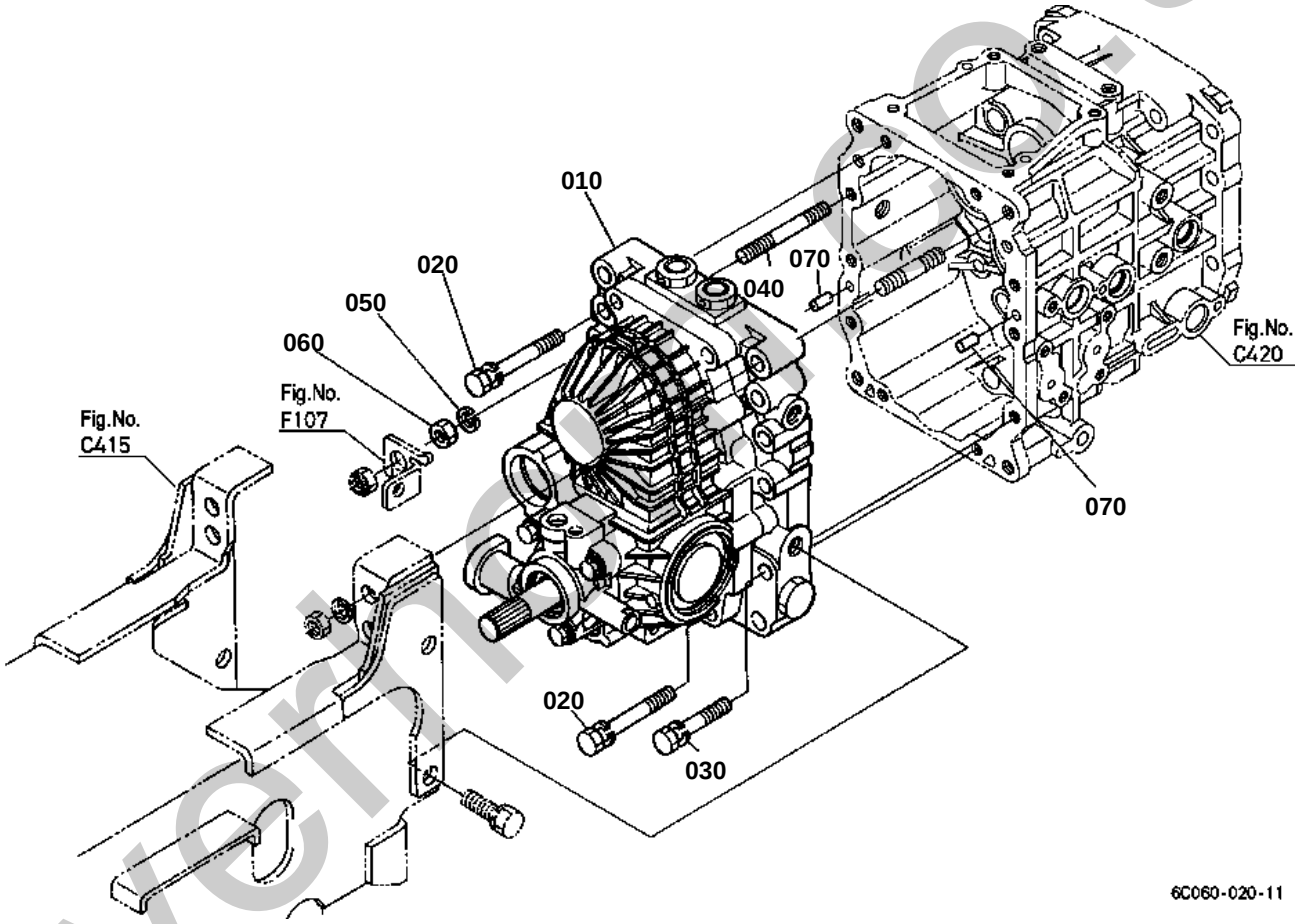

silvermachine.co.uk

↔ Interchangeable; ≠ not interchangeable; ← new for old; → old for new

REF.No	Part No.	Description	Q'ty	S.No.	I/C	REMARKS	Weight (kgf)	Weight (lb)
010	6C150-11603	ASSY HST	1				16	35.2
020	01123-51075	BOLT	4				0.05	0.11
030	01123-51055	BOLT	5				0.038	0.0836
040	6C050-11690	STUD	1				0.043	0.0946
050	04512-60100	WASHER SPRING	1				0.002	0.0044
060	02176-50100	NUT	1				0.005	0.011
070	05012-00614	PIN STRAIGHT	2				0.004	0.0088

silverhorn.co.uk

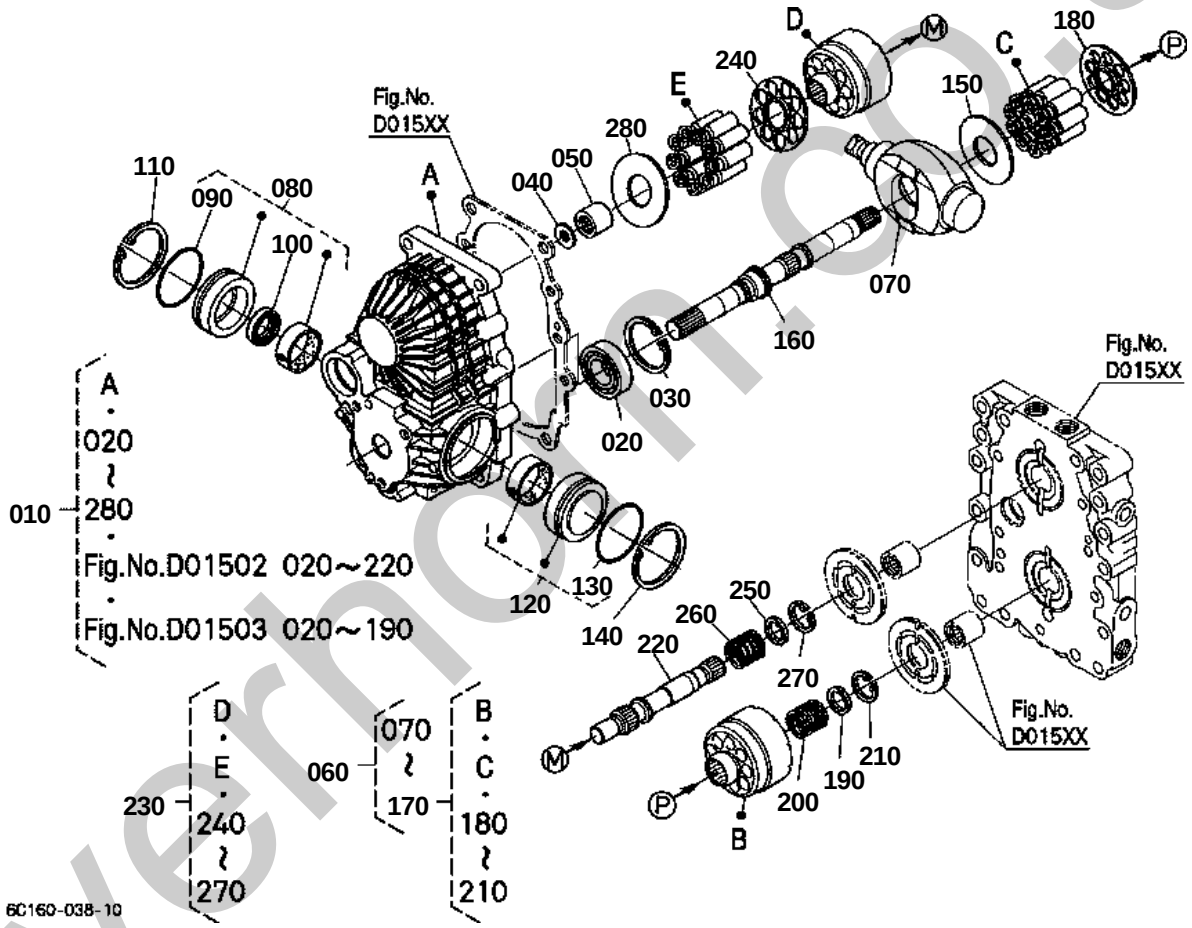

silvernon.co.uk

↔ Interchangeable; ≠ not interchangeable; ← new for old; → old for new

REF.No	Part No.	Description	Q'ty	S.No.	I/C	REMARKS	Weight (kgf)	Weight (lb)
010	6C150-11603	ASSY HST	1				16	35.2
020	37410-57190	BEARING BALL	1				0.14	0.308
030	04611-00520	CIR CLIP INTERNAL	1				0.009	0.0198
040	6A110-35240	COLLAR	1				0.002	0.0044
050	6A110-35122	BEARING NEEDLE	1				0.023	0.0506
060	32721-35010	ASSY PUMP	1				3.6	7.92
070	32721-35130	PLATE	1				1.02	2.244
080	6A110-35020	ASSY COVER A	1				0.24	0.528
090	04811-50550	O RING	1				0.002	0.0044
100	6A110-35140	SEAL OIL	1				0.009	0.0198
110	04611-00620	CIR CLIP INTERNAL	1				0.011	0.0242
120	6A110-35030	ASSY COVER B	1				0.24	0.528
130	04811-50550	O RING	1				0.002	0.0044
140	04611-00620	CIR CLIP INTERNAL	1				0.011	0.0242
150	32721-35150	COLLAR THRUST	1				0.026	0.0572
160	32721-35160	SHAFT	1				0.62	1.364
170	32721-35040	ASSY BLOCK CYL.	1				1.09	2.398
180	32721-35180	PLATE RETAINER	1				0.02	0.044
190	66415-39240	HOLDER SPRING	1				0.004	0.0088
200	66415-39250	SPRING	1				0.005	0.011
210	66415-39470	CIR CLIP INTERNAL	1				0.02	0.044
220	32721-35230	SHAFT	1				0.35	0.77
230	32721-35070	ASSY BLOCK CYL.	1				1.09	2.398
240	32721-35180	PLATE RETAINER	1				0.02	0.044
250	66415-39240	HOLDER SPRING	1				0.004	0.0088
260	66415-39250	SPRING	1				0.005	0.011
270	66415-39470	CIR CLIP INTERNAL	1				0.02	0.044
280	32721-35150	COLLAR THRUST	1				0.026	0.0572

silverhorn.co.uk

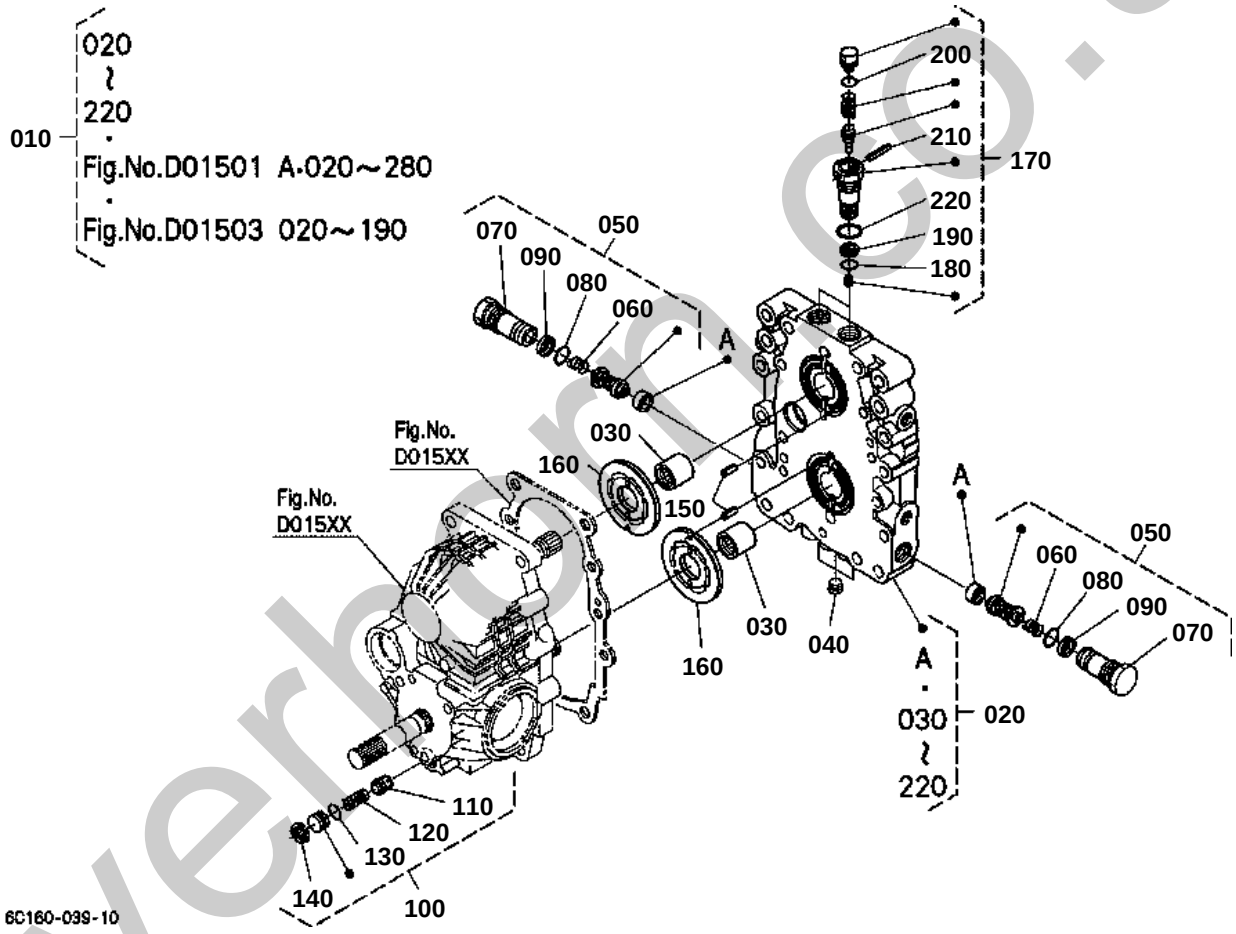

silverhorn.co.uk

↔ Interchangeable; ≠ not interchangeable; ← new for old; → old for new

REF.No	Part No.	Description	Q'ty	S.No.	I/C	REMARKS	Weight (kgf)	Weight (lb)
010	6C150-11603	ASSY HST	1				16	35.2
020	6C070-11700	ASSY COVER PORTBLOCK	1				8	17.6
030	K7001-39030	BEARING NEEDLE	2				0.2	0.44
040	K7001-39620	PLUG	3				0.005	0.011
050	32721-35400	ASSY VALVE RELIEF	2				0.06	0.132
060	66415-83860	SPRING	2				0.002	0.0044
070	35270-16650	PLUG	2				0.02	0.044
080	04817-00150	O RING	2				0.001	0.0022
090	32721-35280	RING BACK UP	2				0.001	0.0022
100	32721-35200	ASSY VALVE RELIEF	1				0.022	0.0484
110	66363-39710	POPPET L	1				0.006	0.0132
120	66363-39720	SPRING	1				0.01	0.022
130	04817-00120	O RING	1				0.001	0.0022
140	04611-00170	CIR CLIP INTERNAL	1				0.001	0.0022
150	05411-00414	PIN SPRING	2				0.001	0.0022
160	K7001-39920	PLATE VALVE	2				0.13	0.286
170	6C070-11650	ASSY VALVE NUETRAL	2				0.1	0.22
180	04817-00120	O RING	2				0.001	0.0022
190	66363-39630	RING BACK UP	2				0.001	0.0022
200	04817-00100	O RING	2				0.001	0.0022
210	05411-00325	PIN SPRING	2				0.001	0.0022
220	04817-00180	O RING	2				0.003	0.0066

silverhorn.co.uk

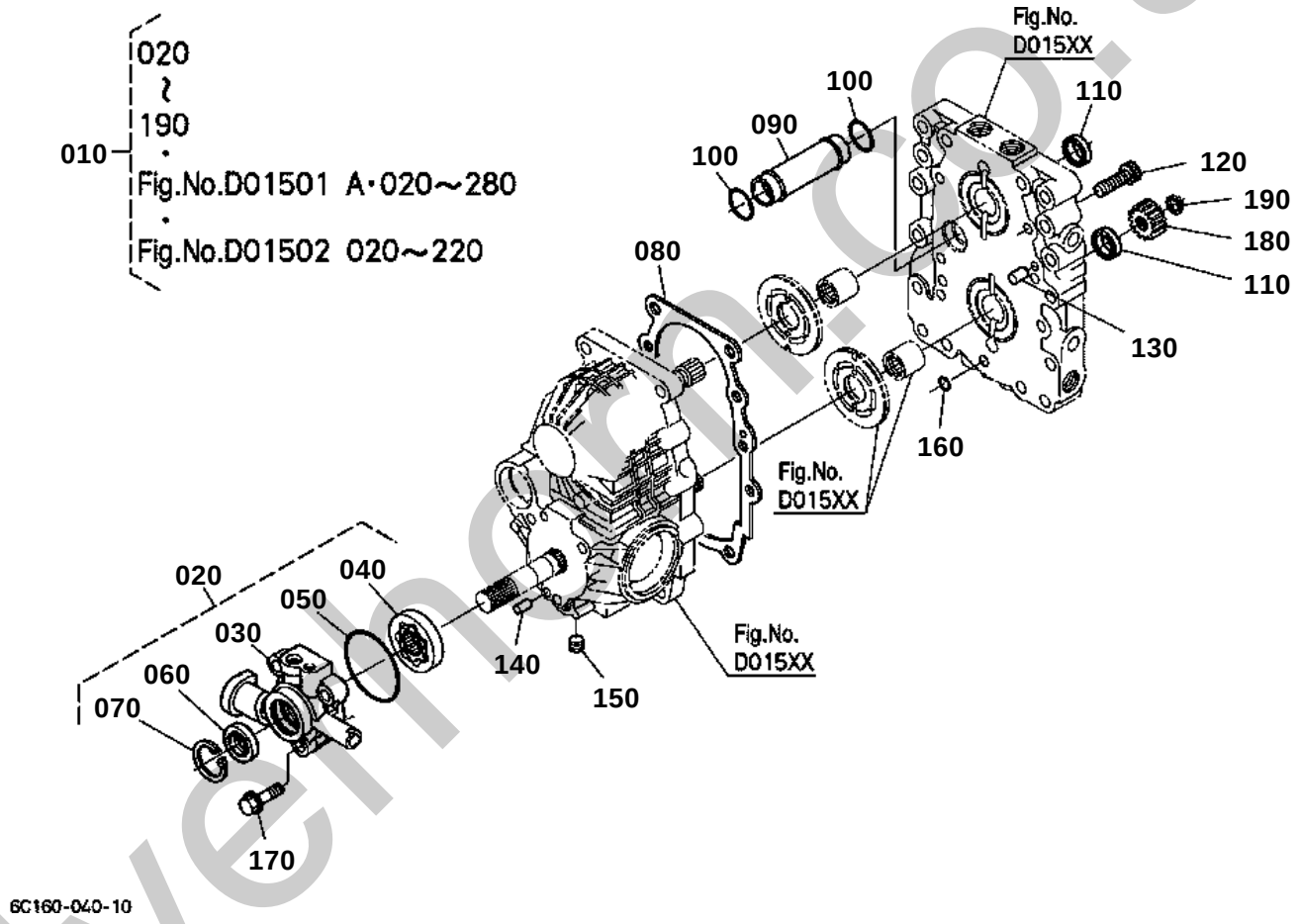

silverhorn.co.uk

↔ Interchangeable; ≠ not interchangeable; ← new for old; → old for new

REF.No	Part No.	Description	Q'ty	S.No.	I/C	REMARKS	Weight (kgf)	Weight (lb)
010	6C150-11603	ASSY HST	1				16	35.2
020	6C150-35302	ASSY PUMP	1				0.45	0.99
030	6C150-35352	CASE CHARGE PUMP	1				0.29	0.638
040	6A000-39820	ROTOR	1				0.15	0.33
050	04811-06630	O RING	1				0.001	0.0022
060	66363-39560	SEAL OIL	1				0.01	0.022
070	04611-00350	CIR CLIP INTERNAL	1				0.003	0.0066
080	32721-35360	GASKET	1				0.005	0.011
090	32721-35373	PIPE	1				0.09	0.198
100	04817-00250	O RING	2				0.003	0.0066
110	32721-35380	SEAL OIL	2				0.002	0.0044
120	01311-11035	BOLT HEX-SOC-HD	6				0.03	0.066
130	05012-00814	PIN STRAIGHT	2				0.006	0.0132
140	05012-00614	PIN STRAIGHT	2				0.004	0.0088
150	32721-35450	PLUG	1				0.002	0.0044
160	04817-00100	O RING	1				0.001	0.0022
170	01754-50830	BOLT FLANGE	3				0.05	0.11
180	6C050-14290	GEAR	1				0.115	0.253
190	04612-00180	CIR CLIP EXTERNAL	1				0.001	0.0022

silverhorn.co.uk

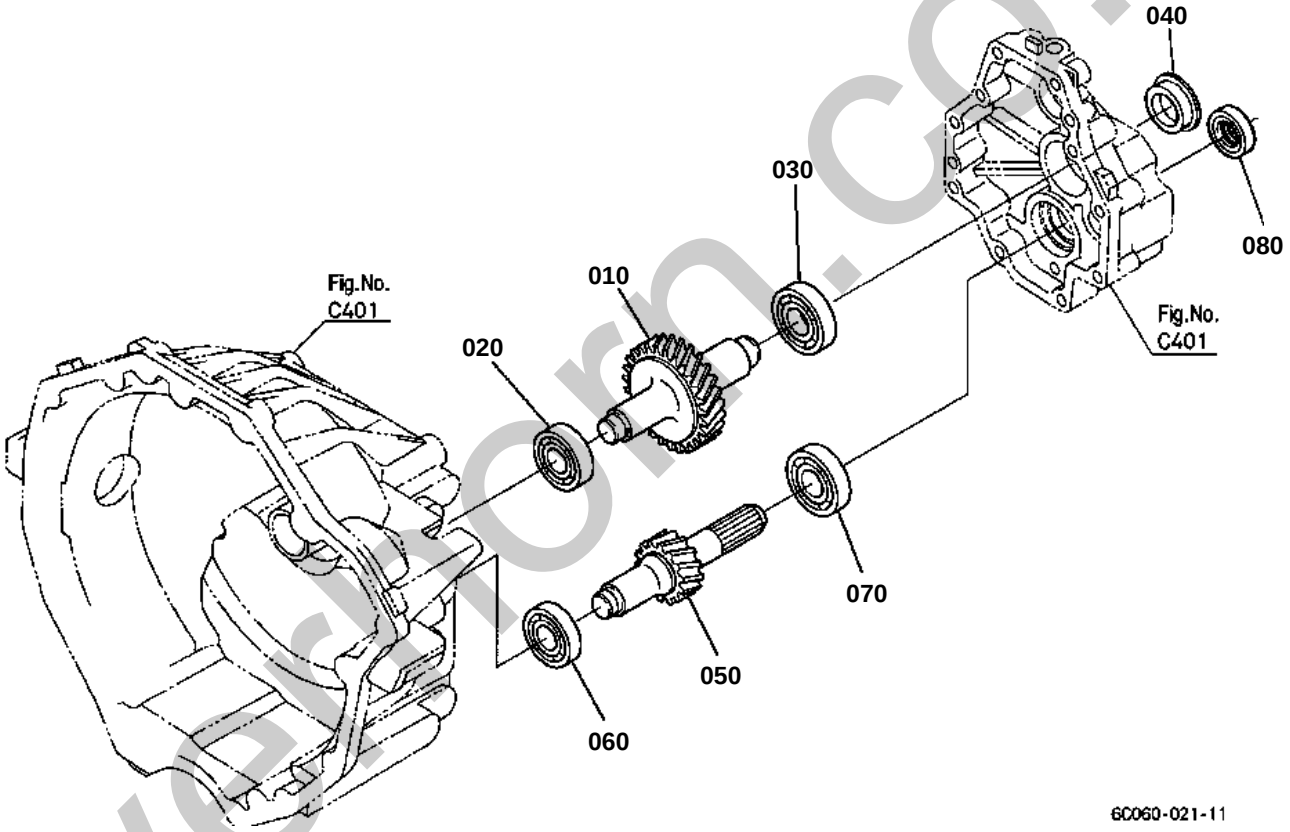

silverthorn.co.uk

FRONT SHAFT

↔ Interchangeable; ≠ not interchangeable; ← new for old; → old for new

REF.No	Part No.	Description	Q'ty	S.No.	I/C	REMARKS	Weight (kgf)	Weight (lb)
010	6C150-13610	SHAFT FRONT	1			27T	0.94	2.068
020	67211-14220	BEARING BALL	1				0.07	0.154
030	08101-06204	BEARING BALL	1				0.102	0.2244
040	6A100-12180	PLUG	1				0.022	0.0484
050	6C150-13710	SHAFT FRONT	1			14T	0.46	1.012
060	08101-06203	BEARING BALL	1				0.063	0.1386
070	52300-16180	BEARING	1				0.103	0.2266
080	66363-39560	SEAL OIL	1				0.01	0.022

silverhorn.co.uk

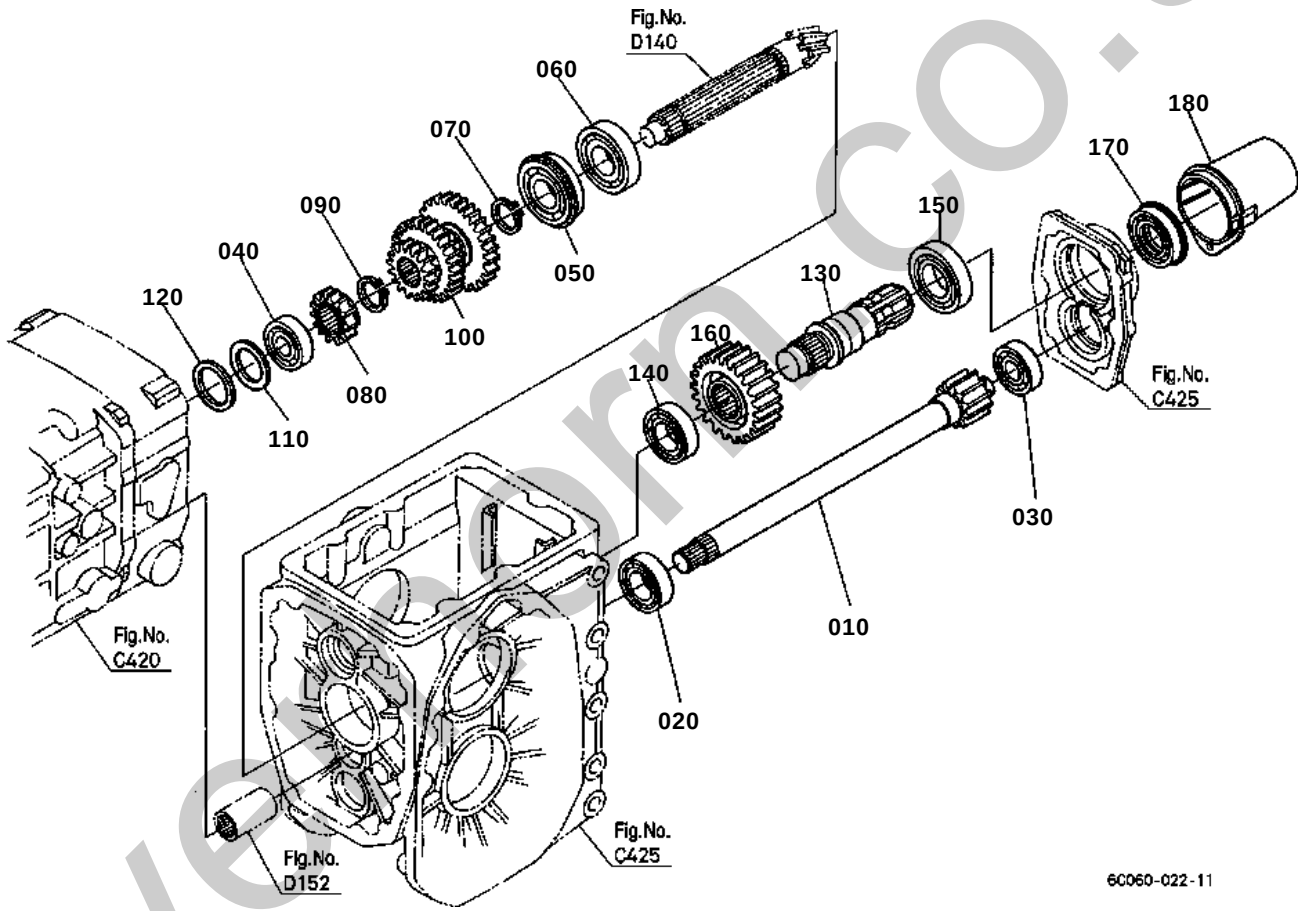

silvermorn.co.uk

PTO SHAFT

↔ Interchangeable; ≠ not interchangeable; ← new for old; → old for new

REF.No	Part No.	Description	Q'ty	S.No.	I/C	REMARKS	Weight (kgf)	Weight (lb)
010	6C070-14510	GEAR-SHAFT	1			11T	1.2	2.64
020	67121-56770	BEARING BALL	1				0.127	0.2794
030	67955-14170	BEARING BALL	1				0.114	0.2508
040	08221-07303	BEARING BALL	1				0.116	0.2552
050	38430-21590	BEARING BALL	1				0.25	0.55
060	64441-22170	BEARING BALL	1				0.24	0.528
070	32721-14660	CIR CLIP EXTERNAL	1				0.005	0.011
080	6C170-14650	GEAR 4WD	1			14T	0.11	0.242
090	04612-00250	CIR CLIP EXTERNAL	1				0.002	0.0044
100	6C070-14622	GEAR	1			16-27-32T	1	2.2
110	66591-14720	SPACER	1				0.002	0.0044
120	66611-14670	SHIM	1			1.4mm	0.008	0.0176
120	66611-14680	SHIM	1			1.8mm	0.01	0.022
120	66611-14690	SHIM	1			0.2mm	0.001	0.0022
130	37410-16510	SHAFT PTO	1				0.79	1.738
140	67121-56770	BEARING BALL	1				0.127	0.2794
150	6C040-14730	BEARING BALL	1				0.15	0.33
160	6C040-14720	GEAR	1			24T	0.68	1.496
170	37410-16550	SEAL OIL	1				0.03	0.066
180	37410-63112	CAP PTO SHAFT	1				0.055	0.121

silverhorn.co.uk

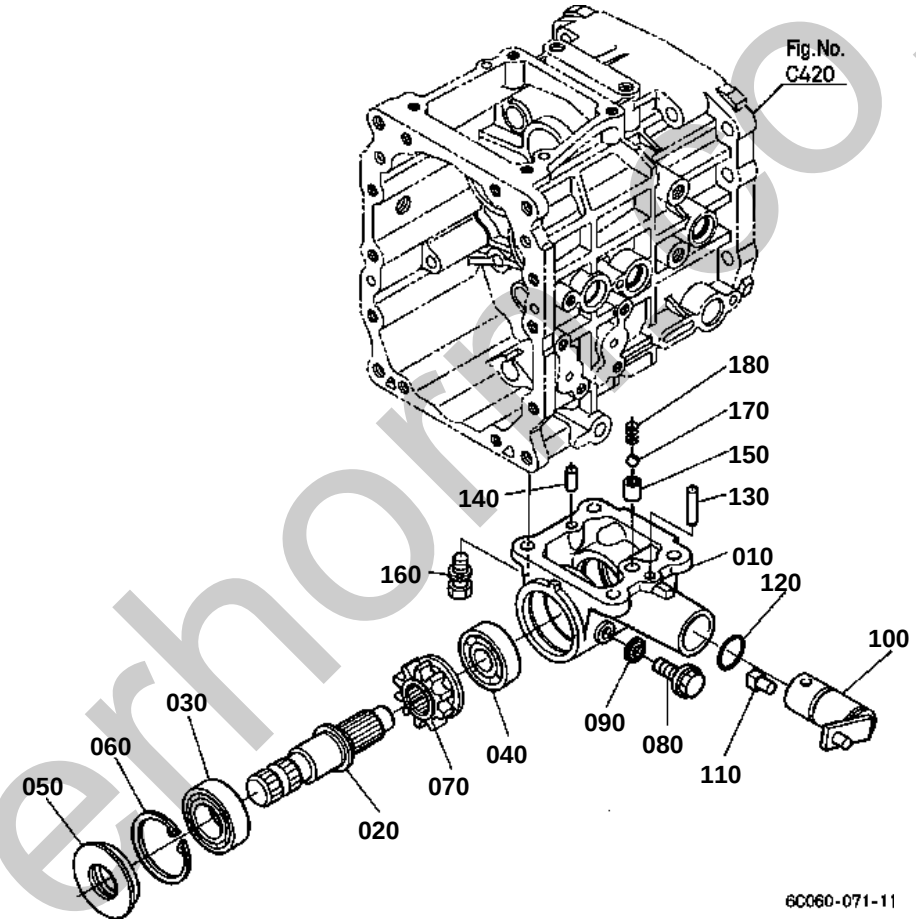

silverhorse.uk

MID PTO [MID PTO TYPE]

↔ Interchangeable; ≠ not interchangeable; ← new for old; → old for new

REF.No	Part No.	Description	Q'ty	S.No.	I/C	REMARKS	Weight (kgf)	Weight (lb)
010	6C050-21210	CASE MID PTO	1				0.48	1.056
020	6C050-21230	SHAFT MID PTO	1				0.37	0.814
030	08101-06205	BEARING BALL	1				0.14	0.308
040	08101-06303	BEARING BALL	1				0.112	0.2464
050	32430-25540	SEAL OIL MID PTO	1				0.04	0.088
060	04611-00520	CIR CLIP INTERNAL	1				0.009	0.0198
070	6C050-21242	GEAR MID PTO	1			11T	0.152	0.3344
080	01774-51212	BOLT FLANGE	1				0.028	0.0616
090	04717-01200	WASHER WITH RUBBER	1				0.002	0.0044
100	6C050-21282	ARM MID PTO	1				0.33	0.726
110	6C050-21292	SHOE	1				0.01	0.022
120	04816-07220	O RING	1				0.001	0.0022
130	05012-00625	PIN STRAIGHT	1				0.006	0.0132
140	05012-00614	PIN STRAIGHT	1				0.004	0.0088
150	66116-11190	PIPE KNOCK	1				0.002	0.0044
160	01123-51035	BOLT	4				0.025	0.055
170	07715-01605	BALL	1				0.003	0.0066
180	62061-18260	SPRING STOPPER	1				0.002	0.0044

silverhorn.co.uk

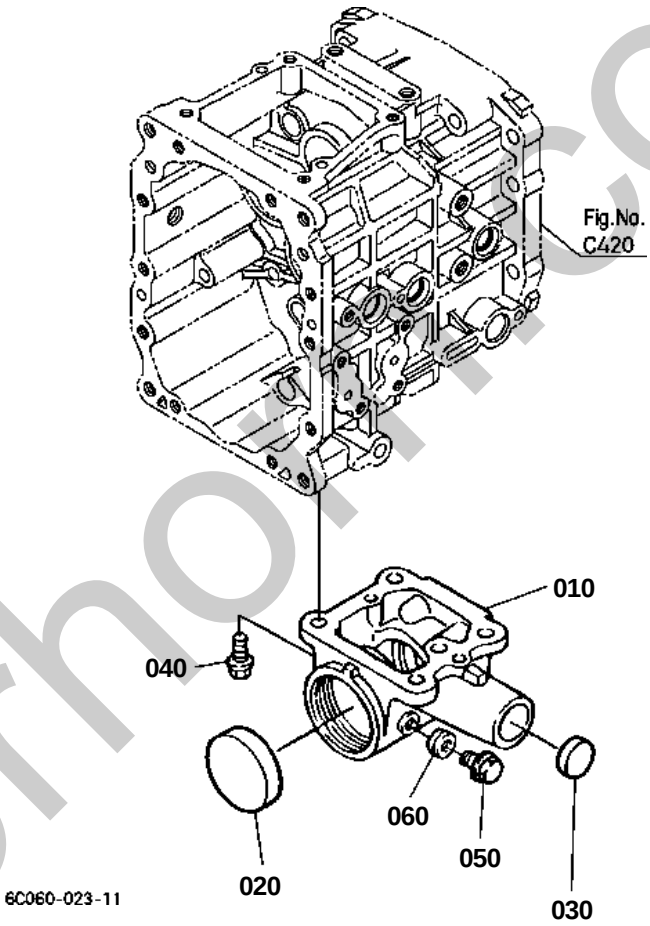

silverhorse.co.uk

↔ Interchangeable; ≠ not interchangeable; ← new for old; → old for new

REF.No	Part No.	Description	Q'ty	S.No.	I/C	REMARKS	Weight (kgf)	Weight (lb)
010	6C050-21210	CASE MID PTO	1				0.48	1.056
020	63313-32270	CAP	1				0.03	0.066
030	16241-96262	PLUG FUEL CAMSHAFT	1				0.007	0.0154
040	01123-51035	BOLT	4				0.025	0.055
050	01774-51212	BOLT FLANGE	1				0.028	0.0616
060	04717-01200	WASHER WITH RUBBER	1				0.002	0.0044

silverhorn.co.uk

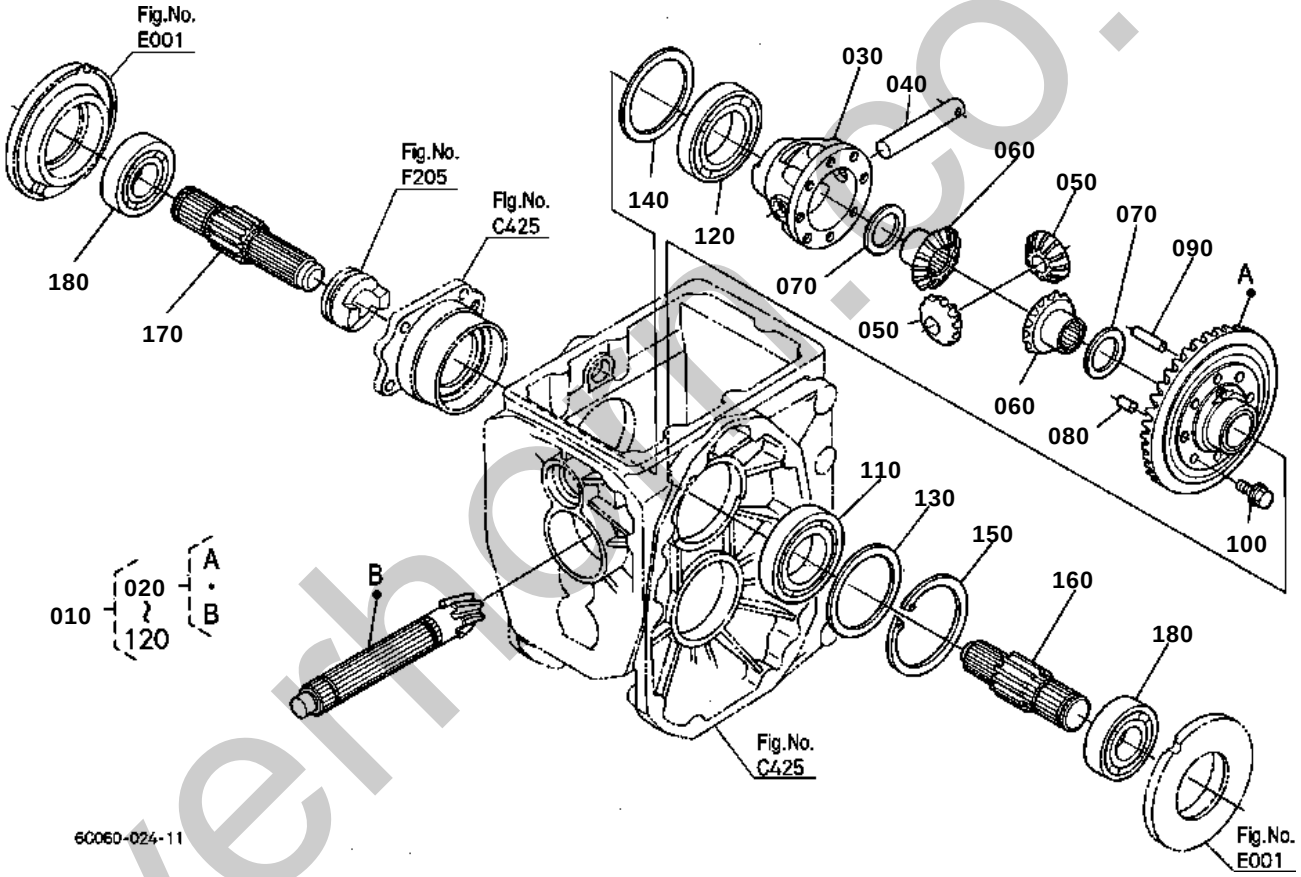

silverhall.co.uk

REAR DIFFERENTIAL

↔ Interchangeable; ≠ not interchangeable; ← new for old; → old for new

REF.No	Part No.	Description	Q'ty	S.No.	I/C	REMARKS	Weight (kgf)	Weight (lb)
010	6C170-97910	ASSY DIFFERENTIAL	1	<=63897			0	0
010	6C170-97914	ASSY DIFFERENTIAL	1	>=63898	¬		4.36	9.592
010	6C170-97915	ASSY DIFFERENTIAL	1	>=66587	¬		4.36	9.592
020	6C170-97920	ASSY GEAR BEVEL	1			6-37T	2.2	4.84
030	6C040-14970	CASE DIFFERENTIAL	1	<=63897			0	0
030	6C040-14973	CASE DIFFERENTIAL	1	>=63898	¬		0.7	1.54
040	67711-14912	SHAFT DIFF.PINION	1				0.14	0.308
050	6C170-14923	GEAR BEVEL	2			12T	0.11	0.242
060	6C040-14930	GEAR DIFF.SIDE	2			14T	0.165	0.363
070	67211-15160	SHIM	2			1.0mm	0.01	0.022
070	67211-15170	SHIM	2			0.8mm	0.008	0.0176
070	67211-15180	SHIM	2			1.2mm	0.01	0.022
080	66591-14792	PIN KNOCK	1				0.003	0.0066
090	66591-14783	PIN STRAIGHT	1				0.01	0.022
100	67810-56680	BOLT UBS	6				0.013	0.0286
110	08101-06009	BEARING BALL	1				0.22	0.484
120	6C140-14980	BEARING BALL	1				0.26	0.572
120	08101-06010	BEARING BALL	1		«		0.262	0.5764
130	66591-14980	SHIM DIFF.SIDE	1			0.5mm	0.005	0.011
130	66591-14990	SHIM DIFF.SIDE	1			0.2mm	0.002	0.0044
140	66611-15140	SHIM DIFF.SIDE	1			0.5mm	0.006	0.0132
140	66611-15150	SHIM DIFF.SIDE	1			0.2mm	0.002	0.0044
150	04611-00750	CIR CLIP INTERNAL	1				0.019	0.0418
160	6C170-14940	SHAFT DIFF.GEAR LH	1	<=60543			0.61	1.342
160	6C170-14942	SHAFT DIFF.GEAR LH	1	>=60544	¬		0.61	1.342
170	6C170-14950	SHAFT DIFF.GEAR RH	1	<=60543			0.71	1.562
170	6C170-14952	SHAFT DIFF.GEAR RH	1	>=60544	¬		0.71	1.562
180	08101-06306	BEARING BALL	2				0.335	0.737

silverhorn.co.uk

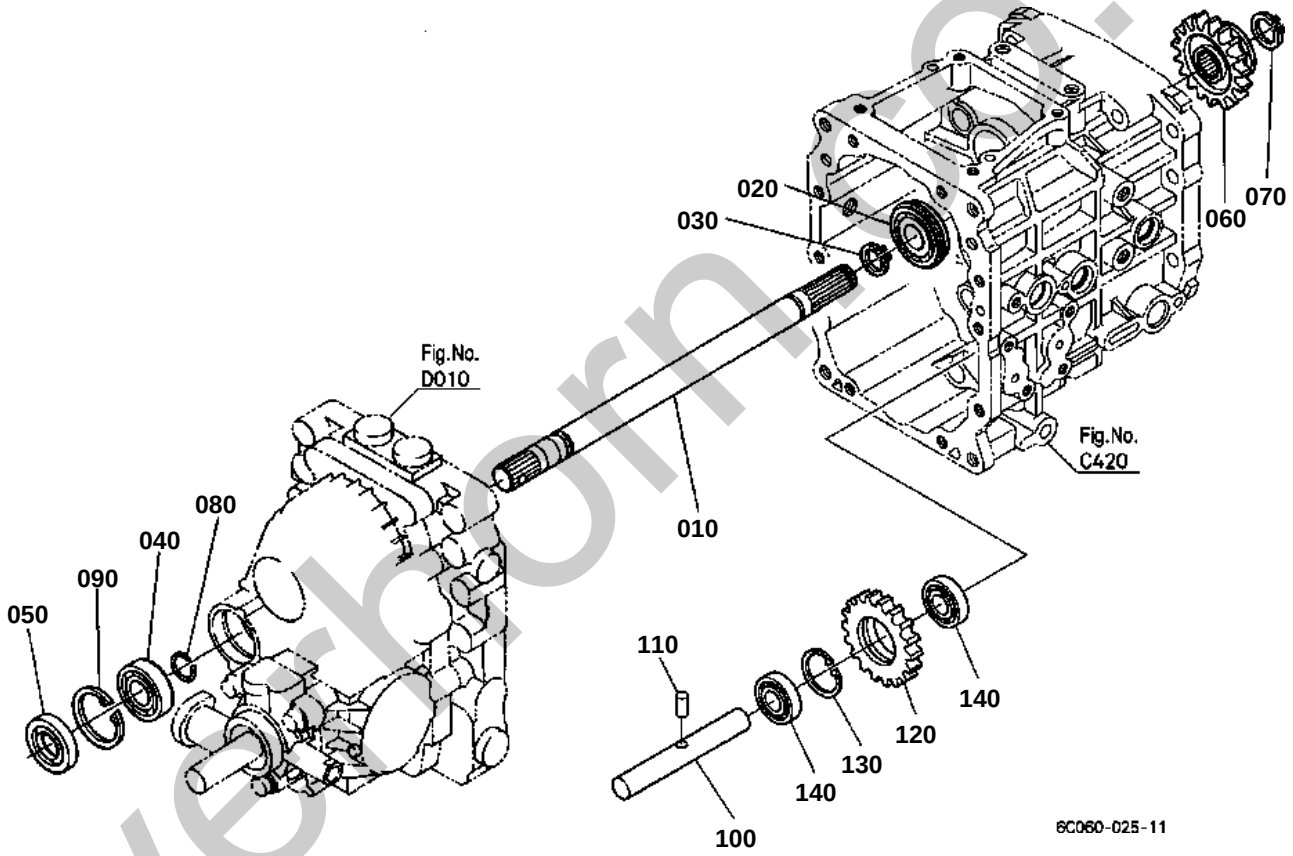

silverhorn.co.uk

FRONT WHEEL PROPELLER SHAFT

↔ Interchangeable; ≠ not interchangeable; ← new for old; → old for new

REF.No	Part No.	Description	Q'ty	S.No.	I/C	REMARKS	Weight (kgf)	Weight (lb)
010	32721-14810	SHAFT 4WD	1				0.84	1.848
020	08151-06204	BEARING BALL	1				0.11	0.242
030	04612-00200	CIR CLIP EXTERNAL	1				0.001	0.0022
040	52300-21660	BEARING	1				0.07	0.154
050	09500-20428	SEAL OIL	1				0.012	0.0264
060	6C170-14840	GEAR 4WD	1			19T	0.21	0.462
070	04612-00190	CIR CLIP EXTERNAL	1				0.001	0.0022
080	6C050-14850	CIR CLIP EXTERNAL	1				0.001	0.0022
090	04611-00420	CIR CLIP INTERNAL	1				0.006	0.0132
100	6C090-21250	SHAFT IDLE	1				0.22	0.484
110	05411-00616	PIN SPRING	1				0.002	0.0044
120	6C040-21220	GEAR M-PTO	1			19T	0.22	0.484
130	04611-00400	CIR CLIP INTERNAL	1				0.005	0.011
140	08101-06203	BEARING BALL	2				0.063	0.1386

silverhorn.co.uk

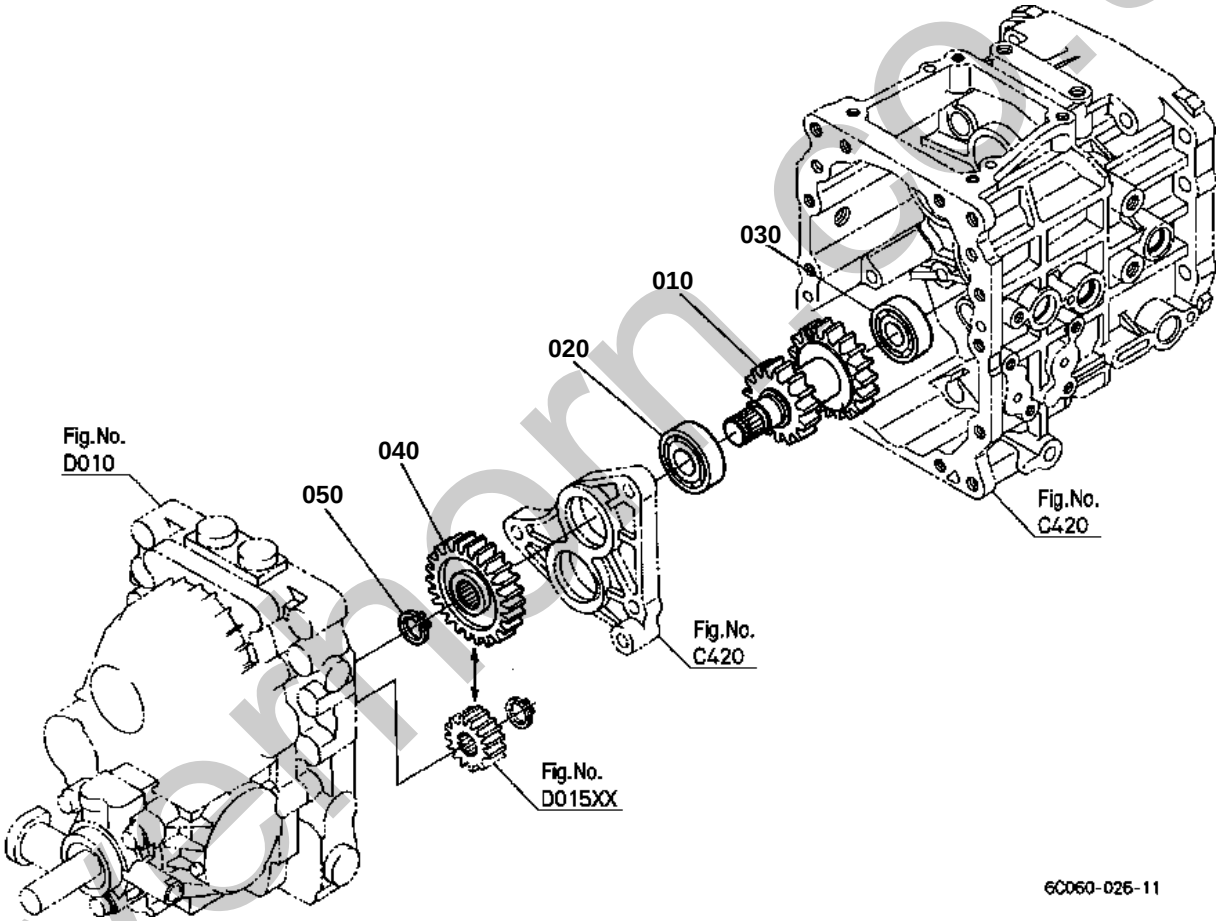

silverhorn.co.uk

2ND SHAFT

↔ Interchangeable; ≠ not interchangeable; ← new for old; → old for new

REF.No	Part No.	Description	Q'ty	S.No.	I/C	REMARKS	Weight (kgf)	Weight (lb)
010	6C050-14210	GEAR-SHAFT	1			13-18T	0.85	1.87
020	52300-16180	BEARING	1				0.103	0.2266
030	61361-14280	BEARING BALL	1				0.09	0.198
040	6C050-14280	GEAR	1			27T	0.32	0.704
050	04612-00190	CIR CLIP EXTERNAL	1				0.001	0.0022

silverhorn.co.uk

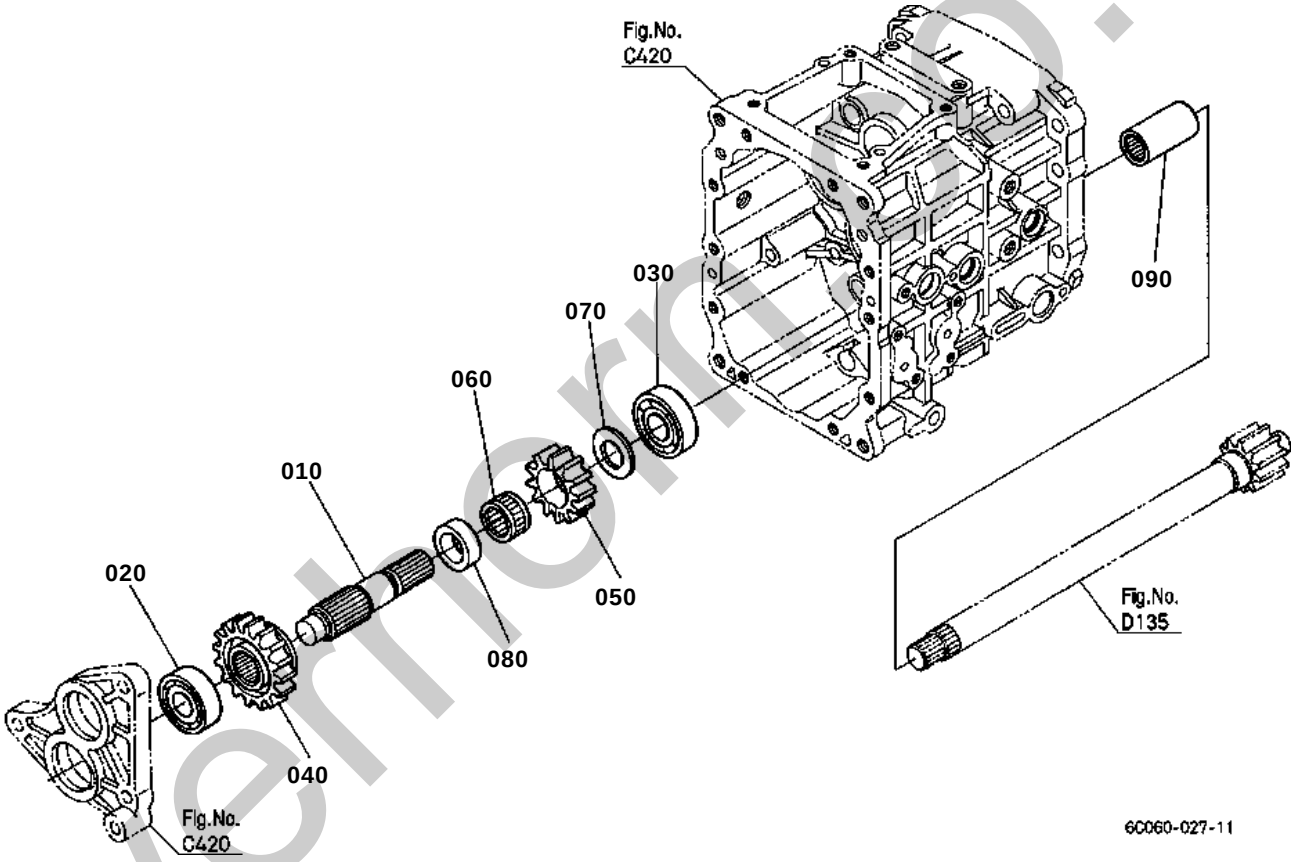

silverhorse.uk

3RD SHAFT

↔ Interchangeable; ≠ not interchangeable; ← new for old; → old for new

REF.No	Part No.	Description	Q'ty	S.No.	I/C	REMARKS	Weight (kgf)	Weight (lb)
010	6C050-14313	SHAFT	1				0.32	0.704
020	08101-06303	BEARING BALL	1				0.112	0.2464
030	08101-06304	BEARING BALL	1				0.146	0.3212
040	6C040-14320	GEAR	1			17T	0.33	0.726
050	6C040-14333	GEAR	1			13T	0.17	0.374
060	6C040-14353	BEARING NEEDLE	1				0.03	0.066
070	67111-14160	COLLAR	1				0.01	0.022
080	6C040-14362	COLLAR	1				0.042	0.0924
090	6C050-14520	COUPLING	1				0.099	0.2178

silverhorn.co.uk

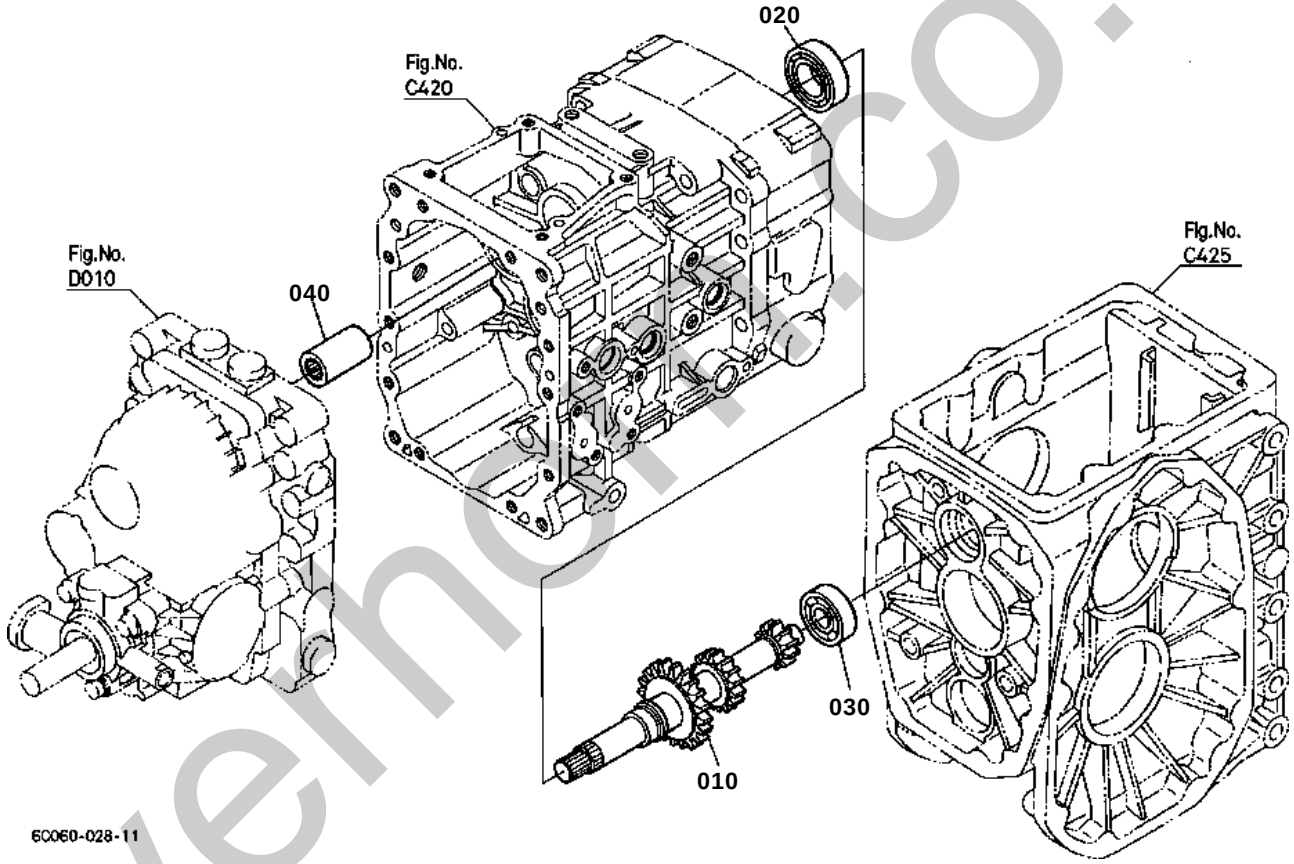

silverhorse.co.uk

4TH SHAFT

↔ Interchangeable; ≠ not interchangeable; ← new for old; → old for new

REF.No	Part No.	Description	Q'ty	S.No.	I/C	REMARKS	Weight (kgf)	Weight (lb)
010	6C070-14412	GEAR-SHAFT	1			21-16-11T	1.15	2.53
020	08101-06205	BEARING BALL	1				0.14	0.308
030	61361-14280	BEARING BALL	1				0.09	0.198
040	6C050-14520	COUPLING	1				0.099	0.2178

silverhorn.co.uk

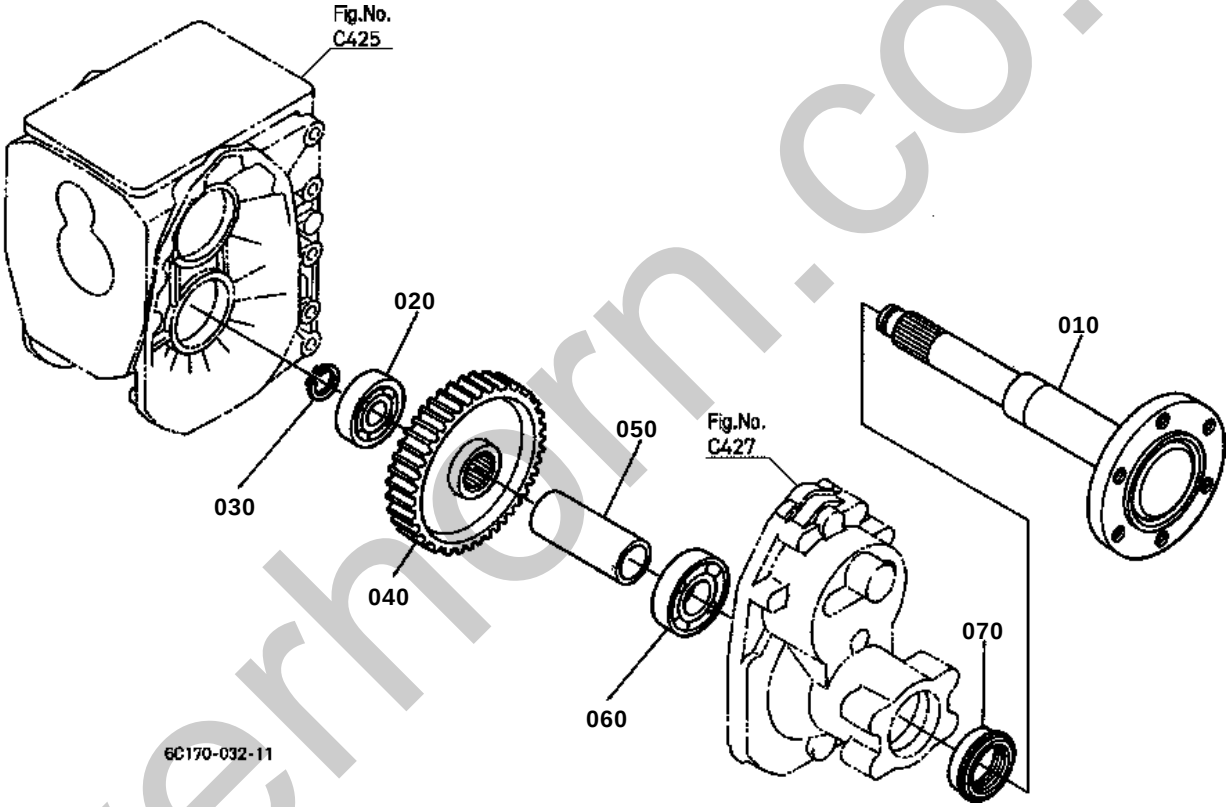

silverhorn.co.uk

↔ Interchangeable; ≠ not interchangeable; ← new for old; → old for new

REF.No	Part No.	Description	Q'ty	S.No.	I/C	REMARKS	Weight (kgf)	Weight (lb)
010	32721-17113	SHAFT REAR AXLE	2				7.3	16.06
020	08101-06306	BEARING BALL	2				0.335	0.737
030	04612-00300	CIR CLIP EXTERNAL	2				0.003	0.0066
040	32721-17130	GEAR	2			57T	2.72	5.984
050	6C040-17140	COLLAR	2				0.26	0.572
060	08101-06208	BEARING BALL	2				0.355	0.781
070	32721-17150	SEAL OIL	2				0.07	0.154

silverhorn.co.uk

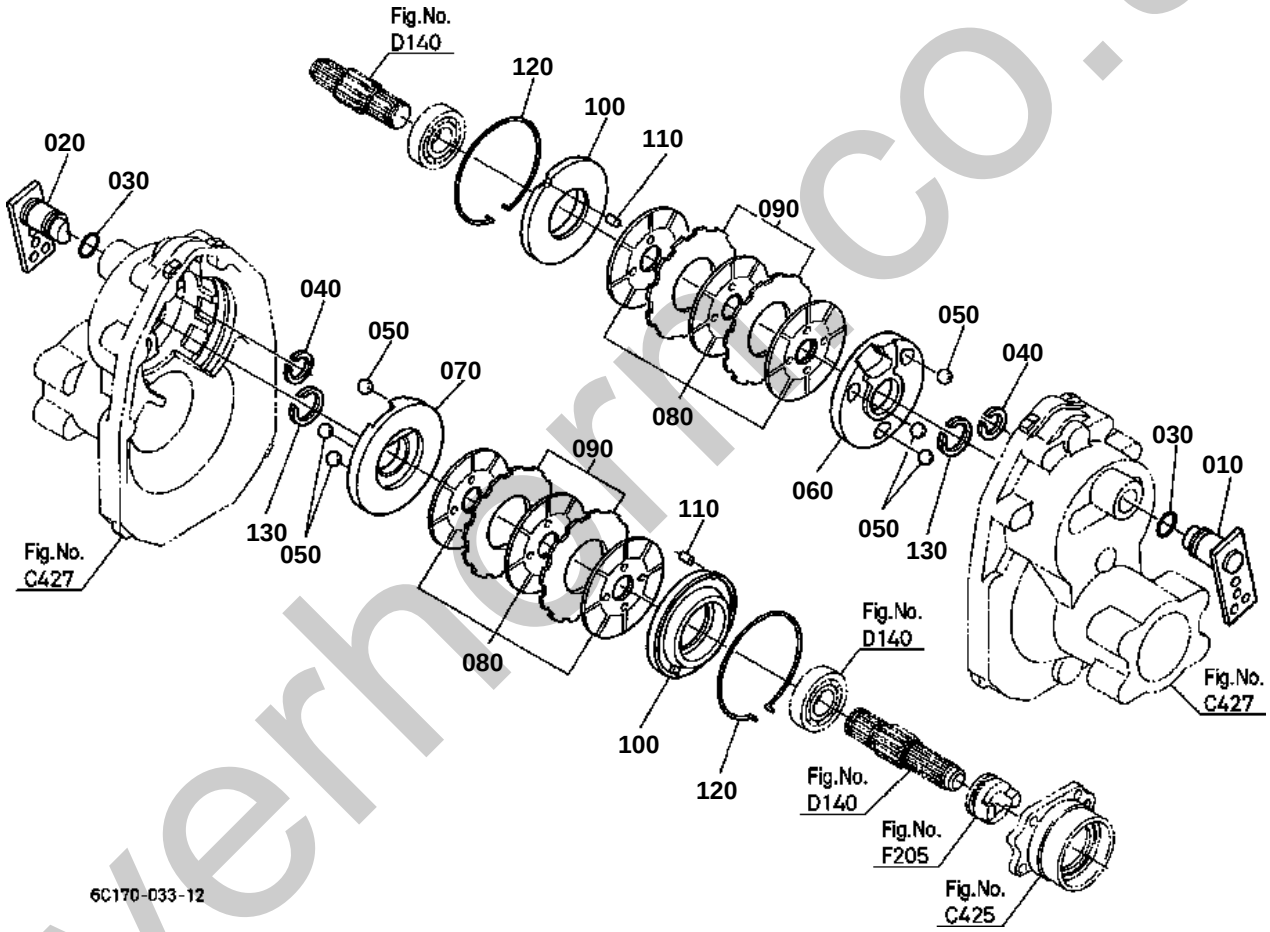

silverhorm.co.uk

↔ Interchangeable; ≠ not interchangeable; ← new for old; → old for new

REF.No	Part No.	Description	Q'ty	S.No.	I/C	REMARKS	Weight (kgf)	Weight (lb)
010	6A100-22360	LEVER CAM LH	1				0.31	0.682
020	6A100-22460	LEVER CAM RH	1				0.31	0.682
030	04816-00210	O RING	2				0.004	0.0088
040	67061-14370	CIR-CLIP	2				0.002	0.0044
050	07715-00805	BALL	6				0.016	0.0352
060	6A320-22320	ACTUATOR LH	1				0.64	1.408
070	6A320-22420	ACTUATOR RH	1				0.63	1.386
080	6C140-22350	DISK BRAKE	6				0.18	0.396
090	6C140-22340	PLATE FRICTION	4				0.12	0.264
100	6C170-22380	HOLDER BEARING	2				1	2.2
110	6C040-22440	PIN	2				0.004	0.0088
120	6C070-22390	CIR-CLIP INTERNAL	2				0.04	0.088
130	70435-51590	CIR-CLIP	2				0.002	0.0044

silverhorn.co.uk

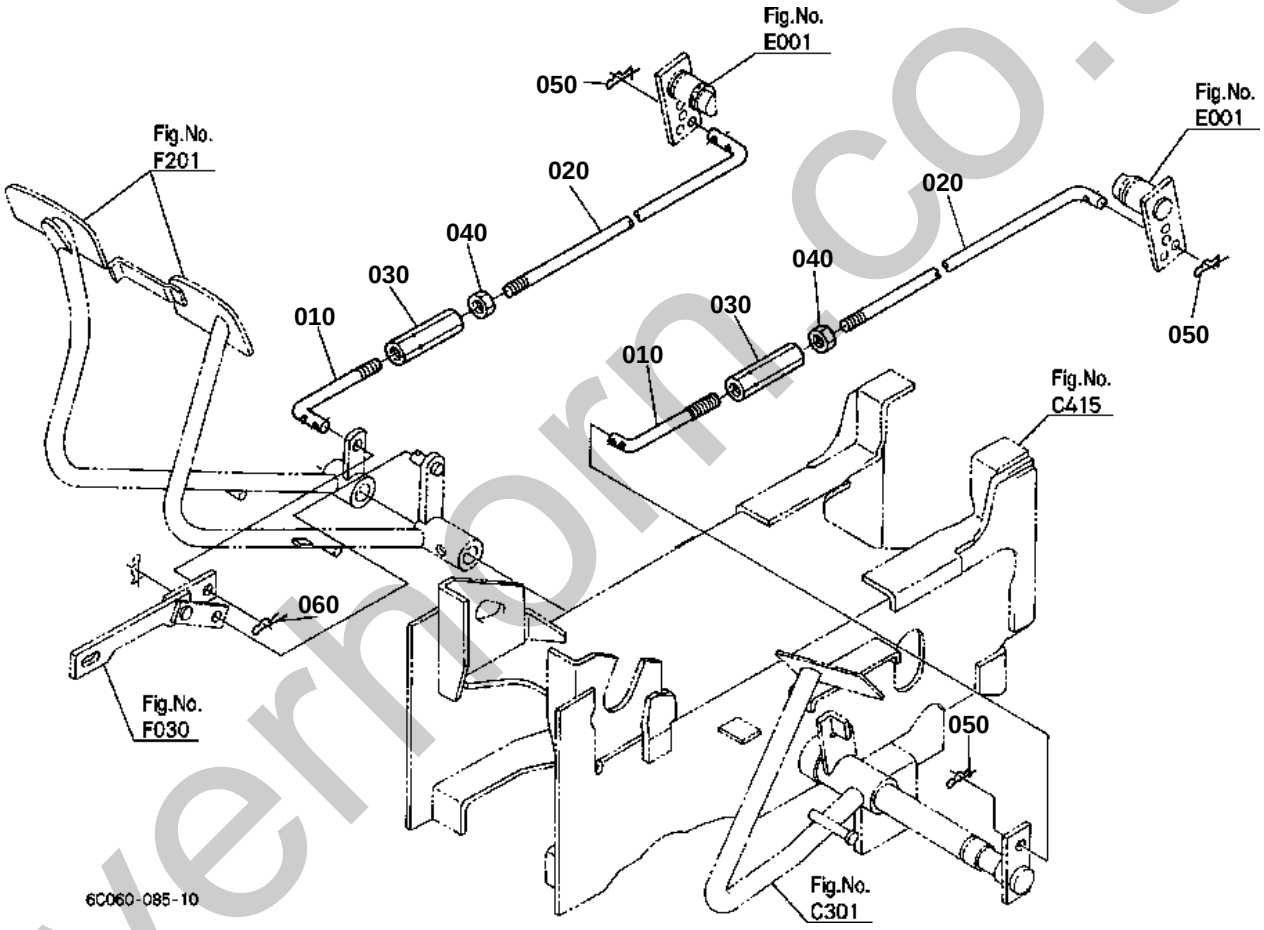

silvermorn.co.uk

BRAKE ROD

↔ Interchangeable; ≠ not interchangeable; ← new for old; → old for new

REF.No	Part No.	Description	Q'ty	S.No.	I/C	REMARKS	Weight (kgf)	Weight (lb)
010	6C040-42350	ROD BRAKE FRONT	2				0.068	0.1496
020	6C070-42360	ROD BRAKE REAR	2				0.27	0.594
030	6C040-42370	TURNBUCKLE	2				0.06	0.132
040	02118-50100	NUT	2				0.005	0.011
050	6C040-42390	PIN SNAP	3				0.002	0.0044
060	05525-61000	PIN SNAP	1				0.002	0.0044

silverhorn.co.uk

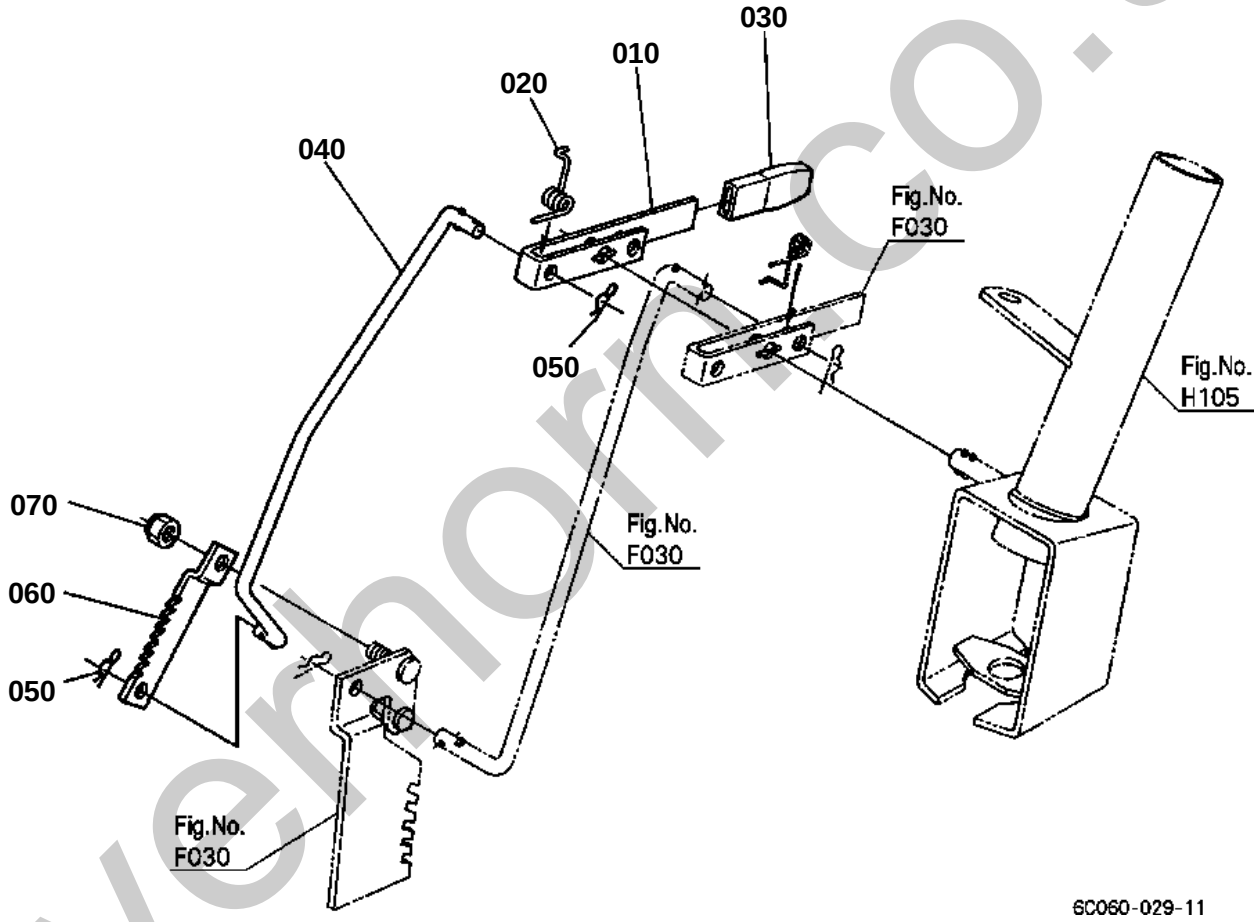

silverhorn.co.uk

PARKING BRAKE LEVER

↔ Interchangeable; ≠ not interchangeable; ← new for old; → old for new

REF.No	Part No.	Description	Q'ty	S.No.	I/C	REMARKS	Weight (kgf)	Weight (lb)
010	6C040-41350	LEVER	1				0.104	0.2288
020	6C040-41380	SPRING RETURN	1				0.008	0.0176
030	6C040-41360	GRIP LEVER	1				0.012	0.0264
040	6C040-41373	ROD BRAKE	1				0.22	0.484
050	05525-50800	PIN SNAP	2				0.001	0.0022
060	6C040-42250	PLATE BRAKE LOCK	1				0.07	0.154
070	50591-62370	NUT	1				0.005	0.011

silverhorn.co.uk

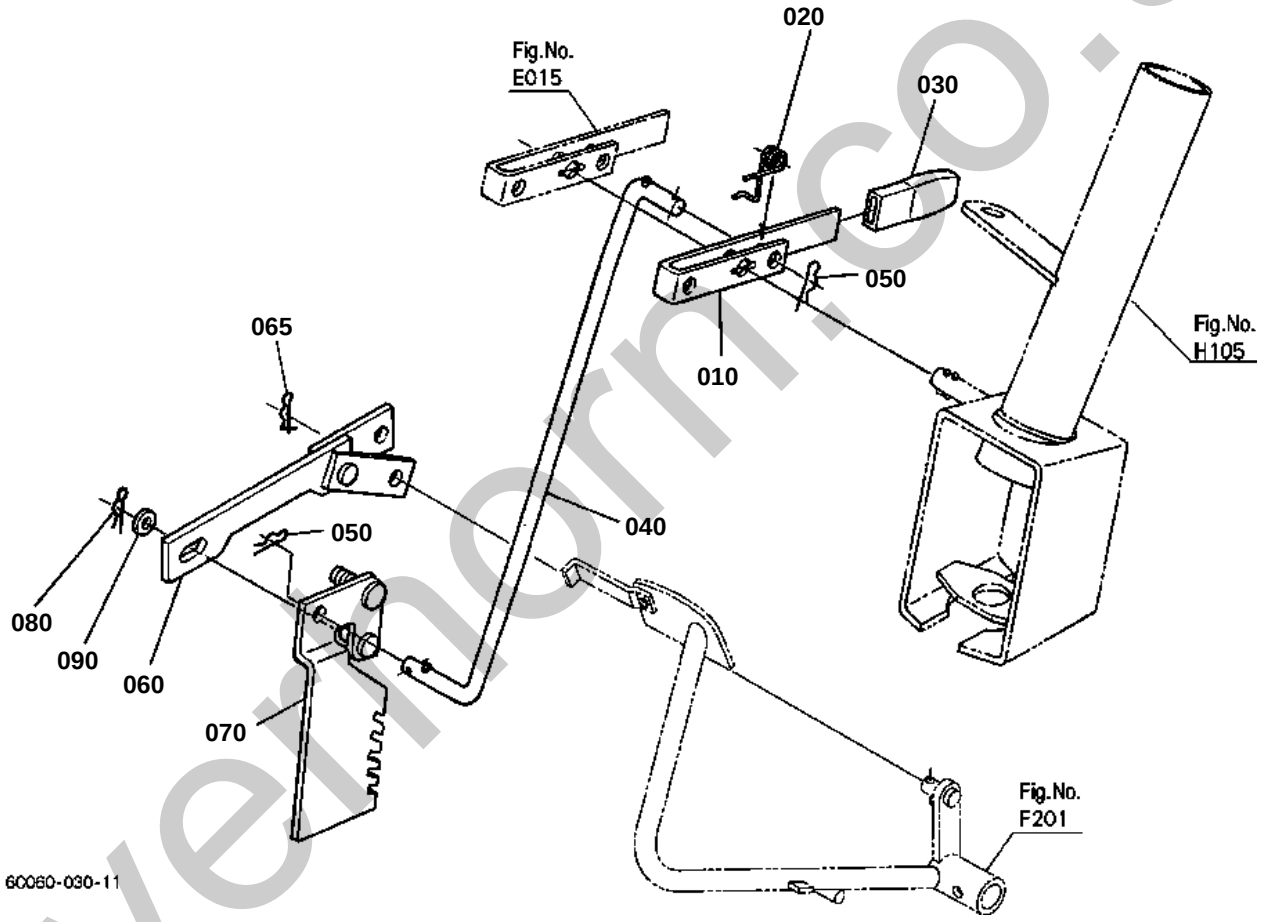

silvermorn.co.uk

SPEED SET LEVER

↔ Interchangeable; ≠ not interchangeable; ← new for old; → old for new

REF.No	Part No.	Description	Q'ty	S.No.	I/C	REMARKS	Weight (kgf)	Weight (lb)
010	6C040-41350	LEVER	1				0.104	0.2288
020	6C050-41390	SPRING RETURN	1				0.006	0.0132
030	6C040-41360	GRIP LEVER	1				0.012	0.0264
040	6C070-41382	ROD	1				0.18	0.396
050	05525-50800	PIN SNAP	2				0.001	0.0022
060	6C050-43340	ASSY LINK	1				0.142	0.3124
065	52300-34120	PIN SNAP	1				0.001	0.0022
070	6C050-43333	ARM	1				0.33	0.726
080	05525-50800	PIN SNAP	1				0.001	0.0022
090	04013-60080	WASHER PLAIN	1				0.002	0.0044

silverhorn.co.uk

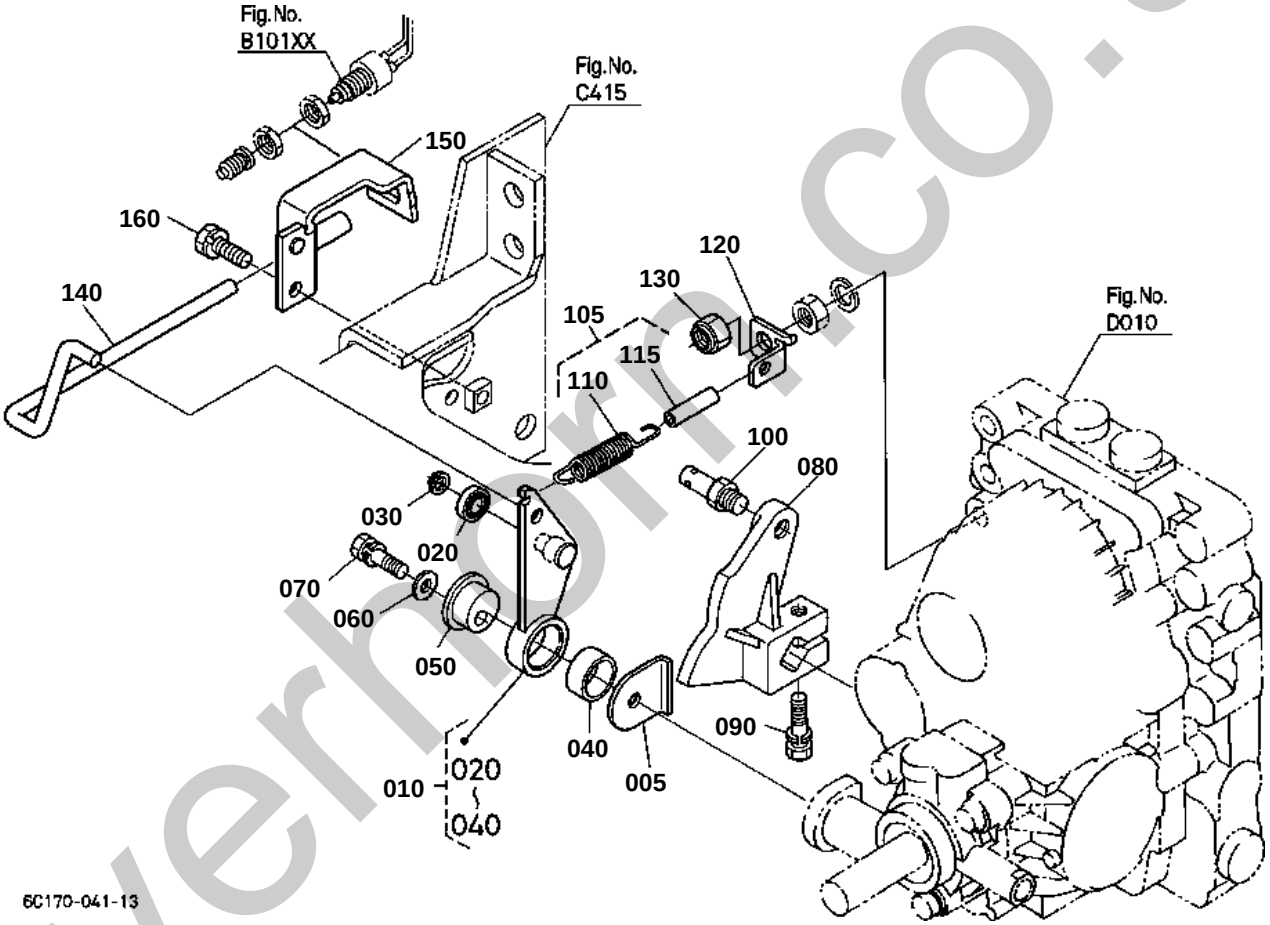

silverhorn.co.uk

NEUTRAL HOLDER LINK

↔ Interchangeable; ≠ not interchangeable; ← new for old; → old for new

REF.No	Part No.	Description	Q'ty	S.No.	I/C	REMARKS	Weight (kgf)	Weight (lb)
005	6C150-43470	SPACER	1				0.009	0.0198
010	6C150-43413	ASSY ARM NEUTRAL	1				0.17	0.374
020	32721-43420	BEARING BALL	1				0.007	0.0154
030	04612-00120	CIR CLIP EXTERNAL	1				0.001	0.0022
040	66204-43572	BUSH	1				0.002	0.0044
050	66204-43352	SHAFT HOLDER	1				0.072	0.1584
060	04012-50080	WASHER PLAIN	1				0.001	0.0022
070	01123-50835	BOLT	1				0.02	0.044
080	6C070-43310	HOLDER NEUTRAL	1				0.38	0.836
090	01123-50835	BOLT	1				0.02	0.044
100	32721-43510	STUD	1				0.027	0.0594
105	6C150-43500	ASSY SPRING	1				0.05	0.11
110	32721-43470	SPRING	1			NOT SALE	0.044	0.0968
115	6C150-43510	TUBE	1	>=58738		NOT SALE	0	0
120	6C150-43480	HOOK SPRING	1				0.016	0.0352
130	02574-50100	NUT LOCK	1				0.007	0.0154
140	6C150-43430	ROD HST NEUTRAL	1				0.1	0.22
150	6C150-43443	STAY NEUTRAL SWITCH	1				0.145	0.319
160	01123-50820	BOLT	1				0.011	0.0242

silverhorn.co.uk

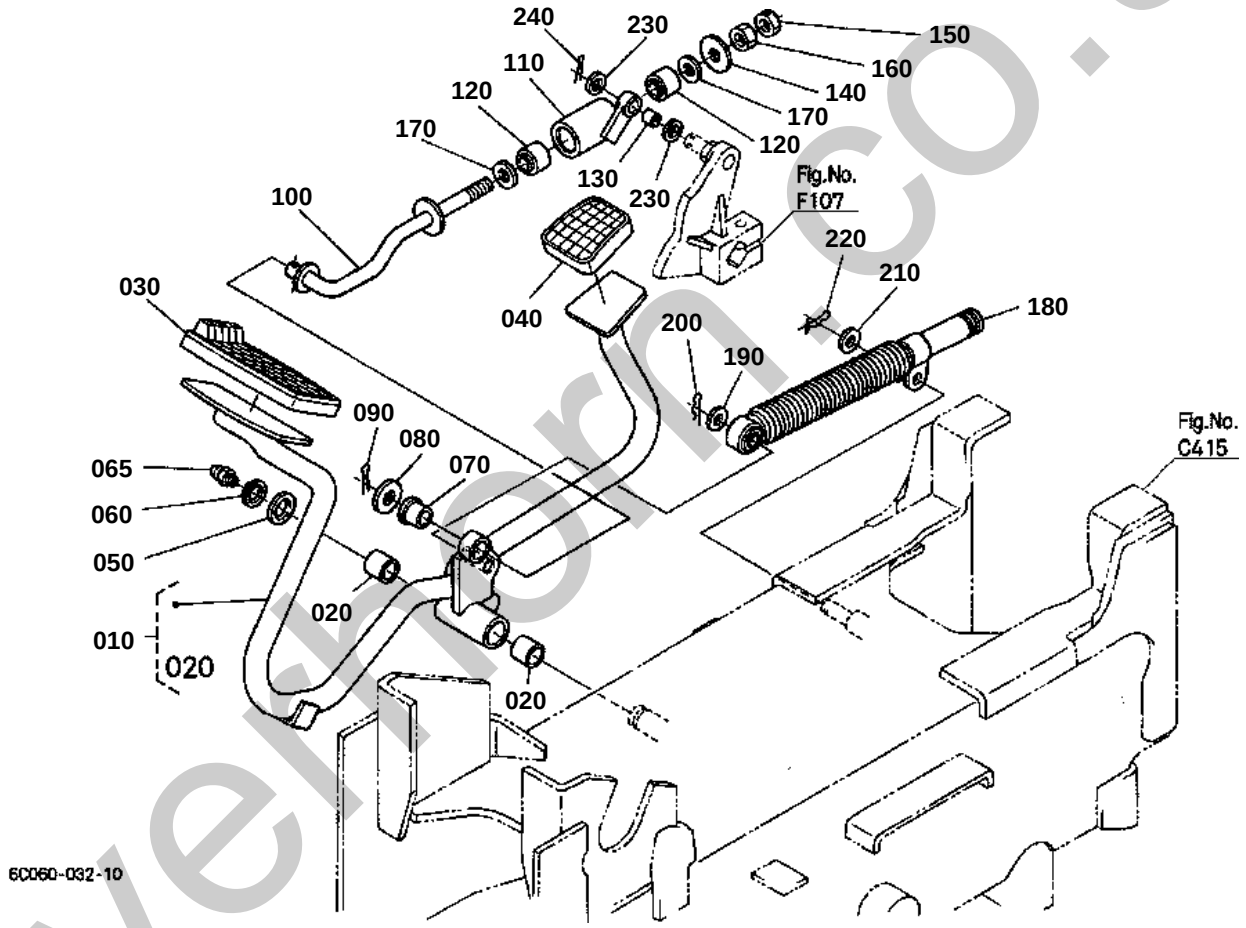

silverthorn.co.uk

SPEED CONTROL PEDAL

↔ Interchangeable; ≠ not interchangeable; ← new for old; → old for new

REF.No	Part No.	Description	Q'ty	S.No.	I/C	REMARKS	Weight (kgf)	Weight (lb)
010	6C070-43403	ASSY PEDAL HST	1				1.82	4.004
020	08511-01610	BUSH	2				0.005	0.011
030	37410-44120	COVER PEDAL	1	<=60543			0	0
030	T2050-44120	COVER PEDAL	1	>=60544	¬		0.07	0.154
040	37410-42760	COVER PEDAL	1				0.025	0.055
050	45403-41330	COLLAR DISTANCE	1				0.01	0.022
060	04612-00160	CIR CLIP EXTERNAL	1				0.001	0.0022
065	06613-10675	NIPPLE GREASE	1				0.003	0.0066
070	32721-43540	BUSH	1				0.001	0.0022
080	04013-60100	WASHER PLAIN	1				0.003	0.0066
090	05511-52520	PIN SPLIT	1				0.001	0.0022
100	32721-43520	ROD	1				0.167	0.3674
110	32721-43530	ROD	1				0.2	0.44
120	6A110-18260	CUSHION RUBBER	2				0.012	0.0264
130	08511-01015	BUSH	1				0.003	0.0066
140	04015-60100	WASHER PLAIN	1				0.015	0.033
150	02116-50100	NUT	1				0.004	0.0088
160	02118-50100	NUT	1				0.005	0.011
170	04011-50100	WASHER PLAIN	2				0.002	0.0044
180	6C052-43350	DAMPER HST	1				0.29	0.638
190	04012-50080	WASHER PLAIN	1				0.001	0.0022
200	05525-50800	PIN SNAP	1				0.001	0.0022
210	04012-50080	WASHER PLAIN	1				0.001	0.0022
220	52300-34120	PIN SNAP	1				0.001	0.0022
230	04011-50100	WASHER PLAIN	2				0.002	0.0044
240	05511-50320	PIN SPLIT	1				0.002	0.0044

silverhorn.co.uk

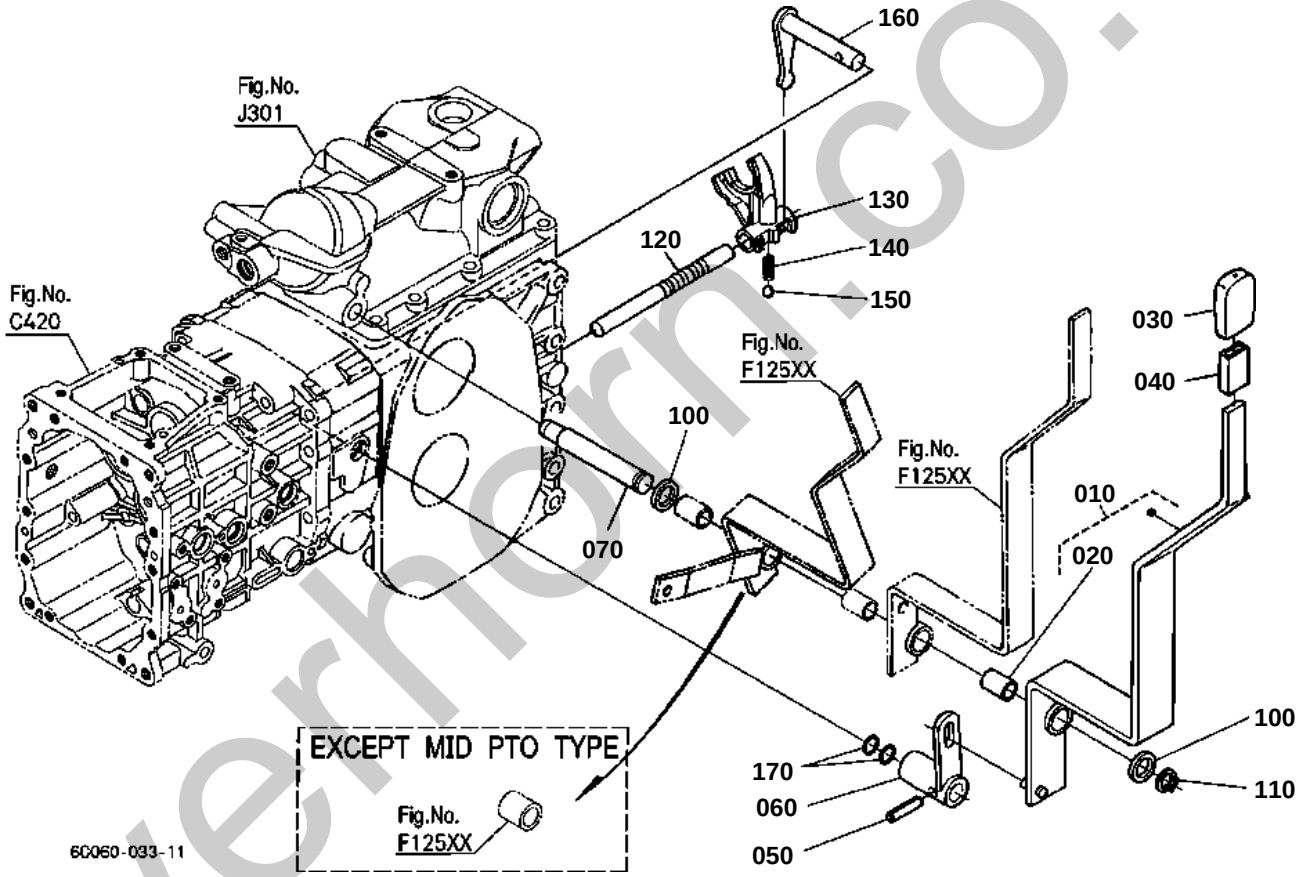

silverhorn.co.uk

RANGE GEAR SHIFT LEVER

↔ Interchangeable; ≠ not interchangeable; ← new for old; → old for new

REF.No	Part No.	Description	Q'ty	S.No.	I/C	REMARKS	Weight (kgf)	Weight (lb)
010	6C070-42603	LEVER RANGE SHIFT	1				1.36	2.992
020	08511-01825	BUSH	1				0.01	0.022
030	TA040-24490	GRIP LEVER	1				0.033	0.0726
040	6C040-42760	CUSHION	1				0.003	0.0066
050	6C070-42620	LEVER SHIFT ARM	1				0.22	0.484
060	05411-00832	PIN SPRING	1				0.035	0.077
070	6C140-42670	SHAFT FULCRUM	1				0.2	0.44
080	99999-99999	BLANK	0				0	0
090	99999-99999	BLANK	0				0	0
100	04011-50180	WASHER PLAIN	2				0.012	0.0264
110	04612-00180	CIR CLIP EXTERNAL	1				0.001	0.0022
120	6C070-18410	ROD FORK	1				0.185	0.407
130	6C070-18420	FORK RANGE SHIFT	1				0.08	0.176
140	62061-18260	SPRING STOPPER	1				0.002	0.0044
150	07715-01605	BALL	1				0.003	0.0066
160	6C170-18512	ARM RANGE SHIFT	1				0.19	0.418
170	04816-00160	O RING	2				0.003	0.0066

silverhorn.co.uk

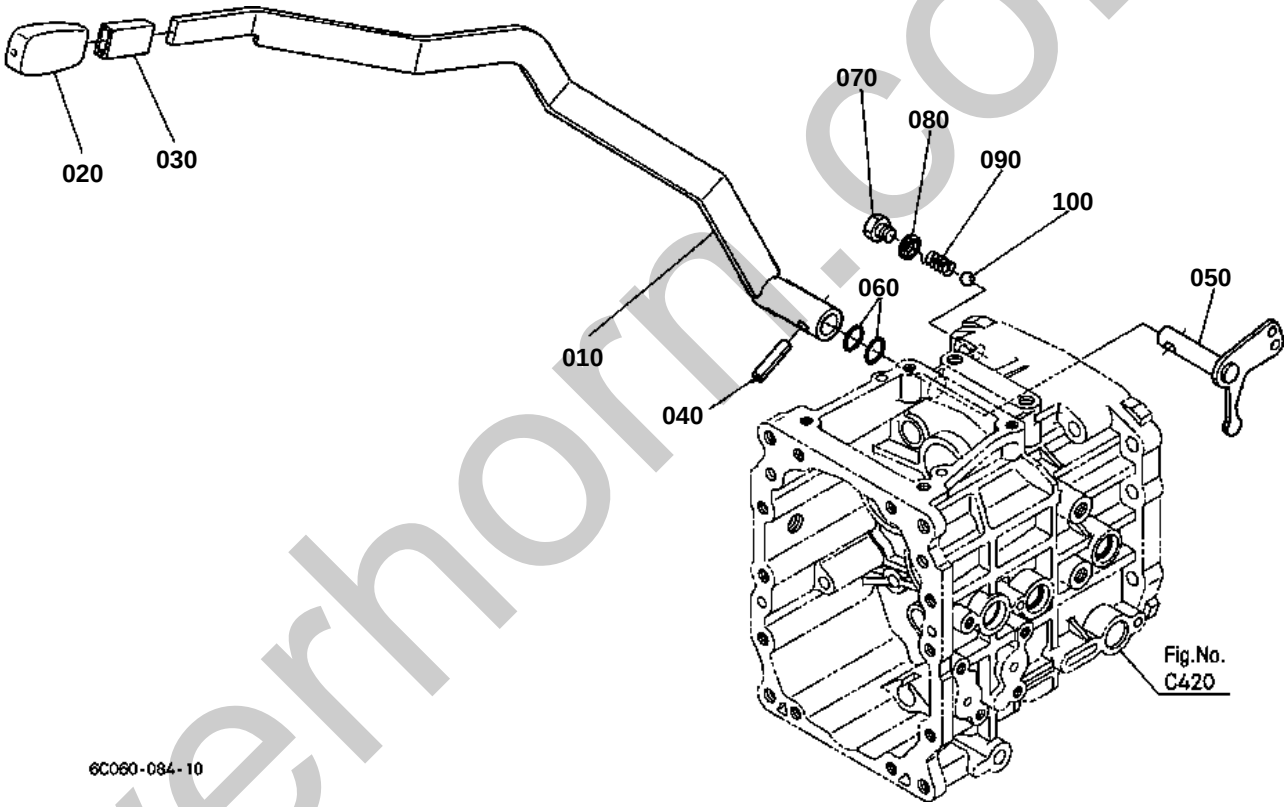

silverhorn.co.uk

FRONT WHEEL DRIVE LEVER

↔ Interchangeable; ≠ not interchangeable; ← new for old; → old for new

REF.No	Part No.	Description	Q'ty	S.No.	I/C	REMARKS	Weight (kgf)	Weight (lb)
010	6C070-42914	LEVER 4WD CHANGE	1				0.8	1.76
020	6A320-42630	GRIP LEVER	1				0.019	0.0418
030	37410-43570	PIPE	1				0.005	0.011
040	05411-00832	PIN SPRING	1				0.035	0.077
050	6C040-19210	ARM 4WD SHIFT	1				0.19	0.418
060	04816-00160	O RING	2				0.003	0.0066
070	6C040-19222	BOLT	1				0.015	0.033
080	04717-01000	WASHER WITH RUBBER	1				0.001	0.0022
090	62061-18260	SPRING STOPPER	1				0.002	0.0044
100	07715-01605	BALL	1				0.003	0.0066

silverhorn.co.uk

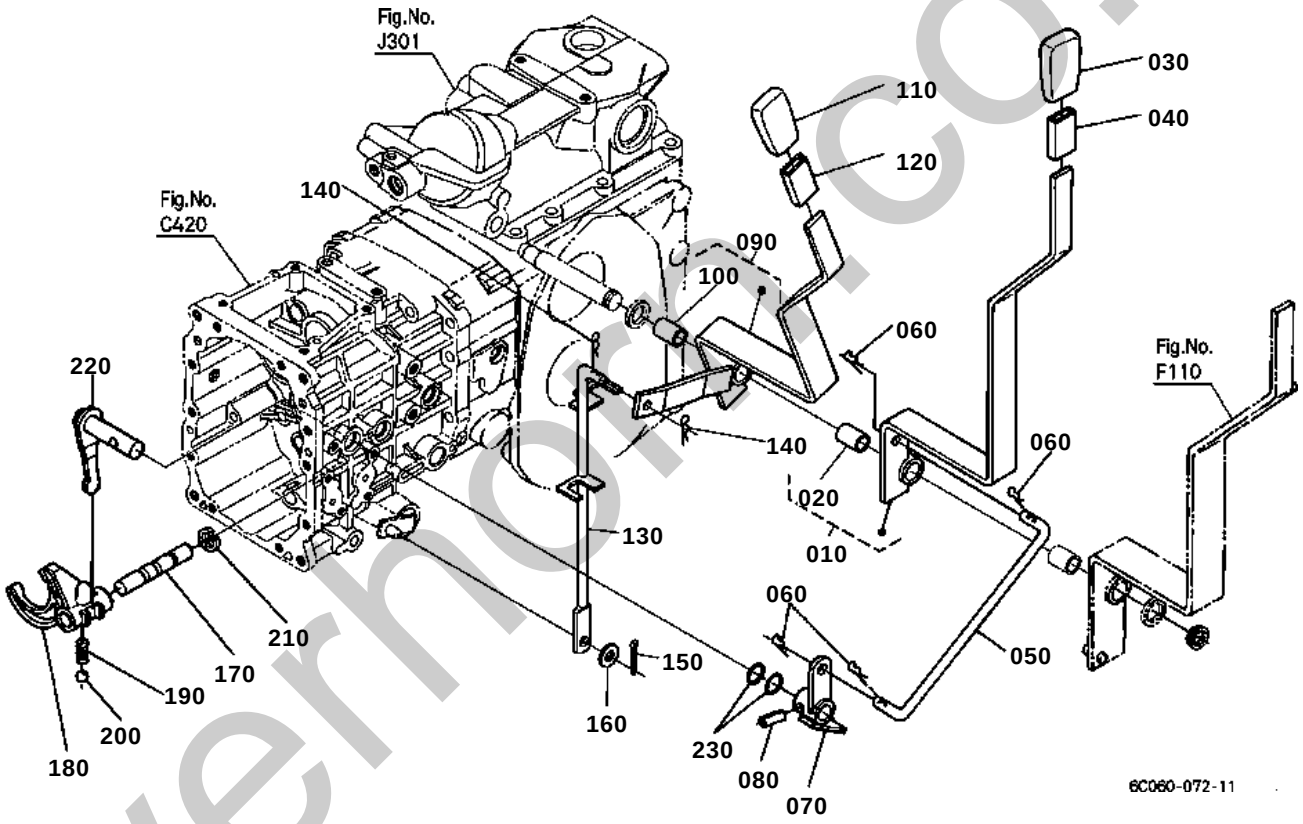

silverhorse.co.uk

PTO GEAR SHIFT LEVER [MID PTO TYPE]

↔ Interchangeable; ≠ not interchangeable; ← new for old; → old for new

REF.No	Part No.	Description	Q'ty	S.No.	I/C	REMARKS	Weight (kgf)	Weight (lb)
010	6C070-42700	LEVER PTO SHIFT	1				0.92	2.024
020	08511-01825	BUSH	1				0.01	0.022
030	6A320-42780	GRIP LEVER	1				0.034	0.0748
040	6C040-42760	CUSHION	1				0.003	0.0066
050	6C070-42740	ROD PTO	1				0.19	0.418
060	05525-61000	PIN SNAP	4				0.002	0.0044
070	6C040-42720	LEVER SHIFT ARM	1				0.1	0.22
080	05411-00832	PIN SPRING	1				0.035	0.077
090	6C070-42800	LEVER MID PTO SHIFT	1				1.05	2.31
100	08511-01825	BUSH	1				0.01	0.022
110	6A320-42780	GRIP LEVER	1				0.034	0.0748
120	6C040-42760	CUSHION	1				0.003	0.0066
130	6C060-42840	ROD MID PTO	1				0.258	0.5676
140	05525-61000	PIN SNAP	2				0.002	0.0044
150	05511-52520	PIN SPLIT	1				0.001	0.0022
160	04011-50100	WASHER PLAIN	1				0.002	0.0044
170	6C050-18610	ROD FORK	1				0.108	0.2376
180	6C040-18620	FORK PTO SHIFT	1				0.09	0.198
190	62061-18260	SPRING STOPPER	1				0.002	0.0044
200	07715-01605	BALL	1				0.003	0.0066
210	04613-50120	CIR CLIP EXTERNAL	1				0.001	0.0022
220	6C040-18712	ARM PTO SHIFT	1				0.16	0.352
230	04816-00160	O RING	2				0.003	0.0066

silverhorn.co.uk

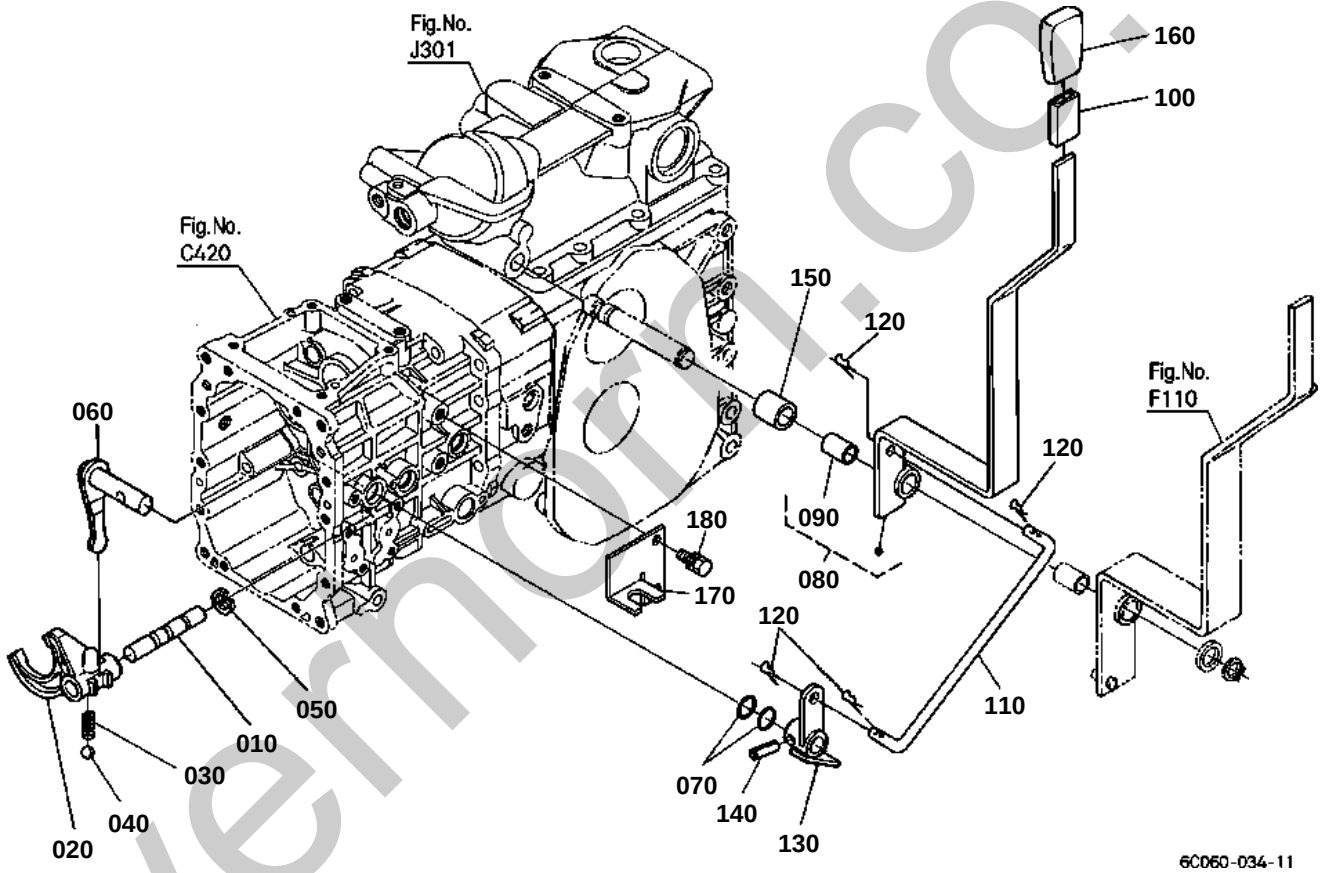

silvermoor.co.uk

PTO GEAR SHIFT LEVER [EXCEPT MID PTO TYPE]

↔ Interchangeable; ≠ not interchangeable; ← new for old; → old for new

REF.No	Part No.	Description	Q'ty	S.No.	I/C	REMARKS	Weight (kgf)	Weight (lb)
010	6C050-18610	ROD FORK	1				0.108	0.2376
020	6C040-18620	FORK PTO SHIFT	1				0.09	0.198
030	62061-18260	SPRING STOPPER	1				0.002	0.0044
040	07715-01605	BALL	1				0.003	0.0066
050	04613-50120	CIR CLIP EXTERNAL	1				0.001	0.0022
060	6C040-18712	ARM PTO SHIFT	1				0.16	0.352
070	04816-00160	O RING	2				0.003	0.0066
080	6C070-42700	LEVER PTO SHIFT	1				0.92	2.024
090	08511-01825	BUSH	1				0.01	0.022
100	6C040-42760	CUSHION	1				0.003	0.0066
110	6C070-42740	ROD PTO	1				0.19	0.418
120	05525-61000	PIN SNAP	4				0.002	0.0044
130	6C040-42720	LEVER SHIFT ARM	1				0.1	0.22
140	05411-00832	PIN SPRING	1				0.035	0.077
150	6C090-42750	COLLAR	1				0.066	0.1452
160	6A320-42780	GRIP LEVER	1				0.034	0.0748
170	6C060-42750	STAY NEUTRAL SWITCH	1				0.1	0.22
180	01123-51020	BOLT	2				0.02	0.044

silverhorn.co.uk

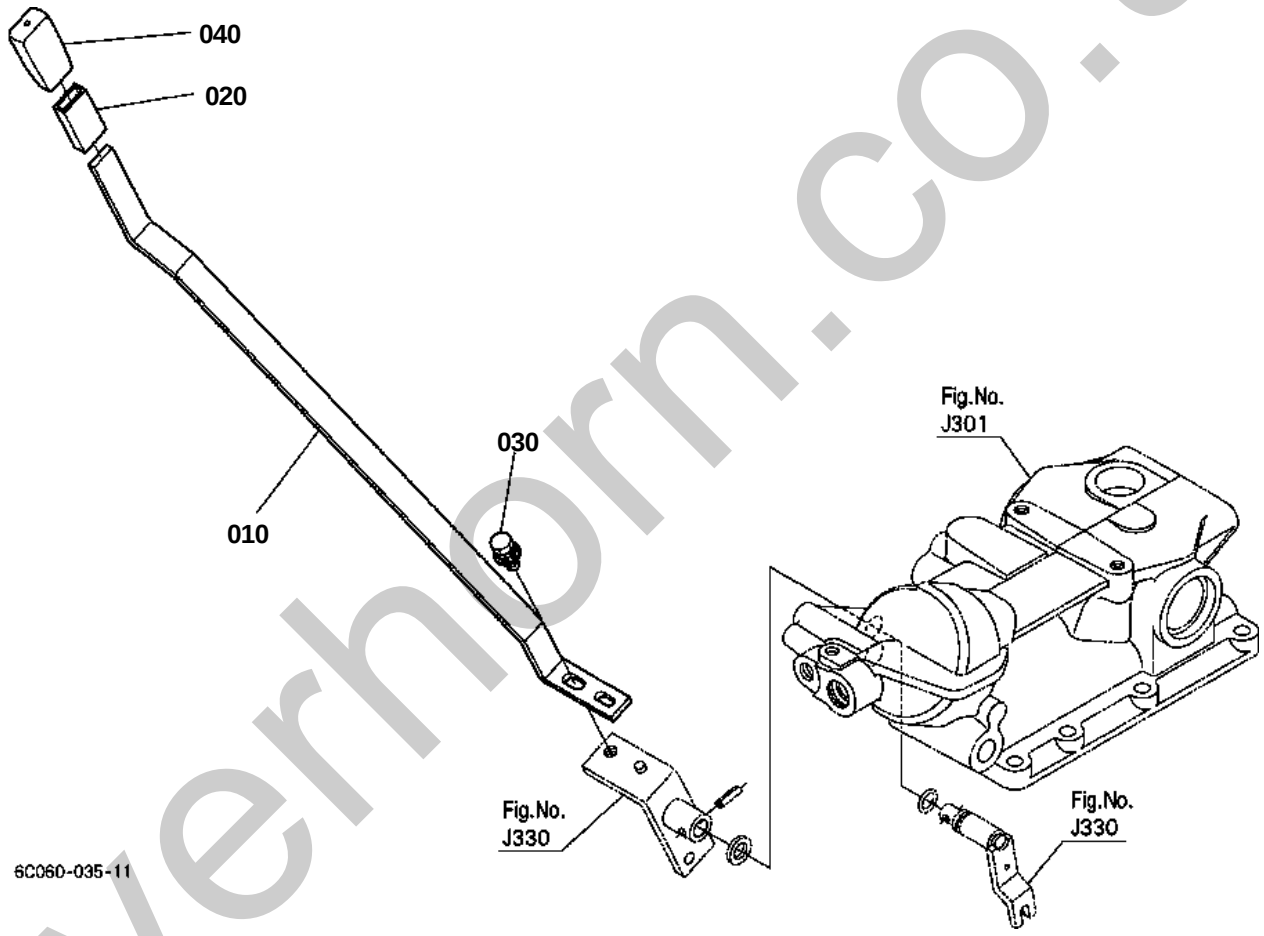

silverhorn.co.uk

HYDRAULIC CONTROL LEVER

↔ Interchangeable; ≠ not interchangeable; ← new for old; → old for new

REF.No	Part No.	Description	Q'ty	S.No.	I/C	REMARKS	Weight (kgf)	Weight (lb)
010	6C060-36283	LEVER HYD.CONTROL	1				0.343	0.7546
020	37410-43570	PIPE	1				0.005	0.011
030	01125-60820	BOLT	1				0.015	0.033
040	31351-36880	GRIP LEVER	1				0.04	0.088

silverhorn.co.uk

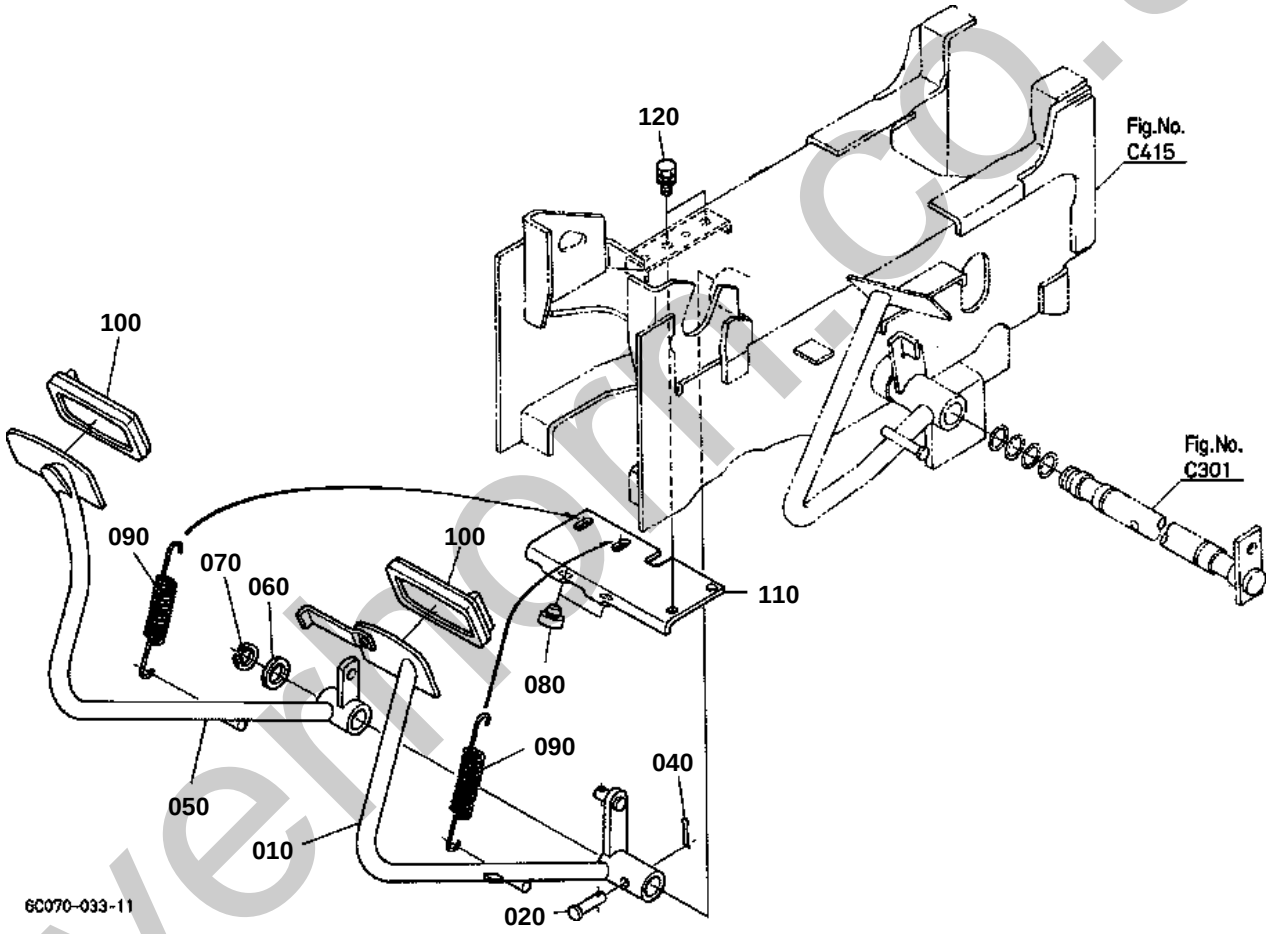

silvermoor.co.uk

BRAKE PEDAL

↔ Interchangeable; ≠ not interchangeable; ← new for old; → old for new

REF.No	Part No.	Description	Q'ty	S.No.	I/C	REMARKS	Weight (kgf)	Weight (lb)
010	6C040-42325	PEDAL BRAKE LH	1				1.75	3.85
020	05122-50840	PIN JOINT	1				0.017	0.0374
030	99999-99999	BLANK	0				0	0
040	05511-50218	PIN SPLIT	1				0.001	0.0022
050	6C040-42330	PEDAL BRAKE RH	1				1.77	3.894
060	66591-43233	COLLAR	1				0.004	0.0088
070	04612-00240	CIR CLIP EXTERNAL	1				0.002	0.0044
080	38240-29870	CUSHION	2				0.004	0.0088
090	66621-43270	SPRING BRAKE RETURN	2				0.04	0.088
100	37410-44120	COVER PEDAL	2	<=60543			0	0
100	T2050-44120	COVER PEDAL	2	>=60544	¬		0.07	0.154
110	6C070-42380	STAY BRAKE PEDAL	1				0.625	1.375
120	01123-50820	BOLT	2				0.011	0.0242

silverhorn.co.uk

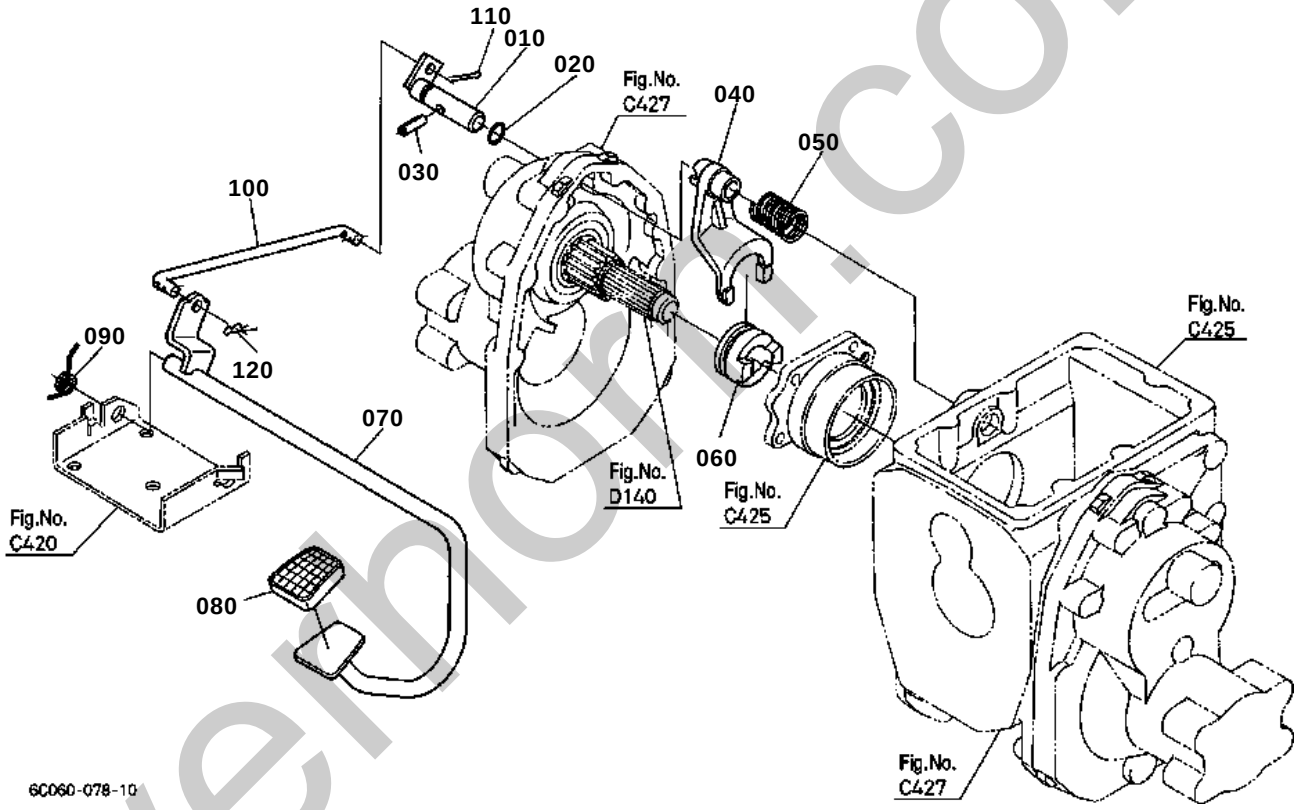

silverthorn.co.uk

DIFFERENTIAL LOCK PEDAL

↔ Interchangeable; ≠ not interchangeable; ← new for old; → old for new

REF.No	Part No.	Description	Q'ty	S.No.	I/C	REMARKS	Weight (kgf)	Weight (lb)
010	32721-19120	ROD FORK	1				0.17	0.374
020	04816-06120	O RING	1				0.002	0.0044
030	6A100-19130	PIN	1				0.017	0.0374
040	6C040-19110	FORK DIFF.LOCK SHIFT	1				0.22	0.484
050	6C040-19130	SPRING	1				0.014	0.0308
060	66611-15130	CLUTCH DIFF.LOCK	1				0.2	0.44
070	6C050-42872	PEDAL DIFF.LOCK	1				1.2	2.64
080	37410-42760	COVER PEDAL	1				0.025	0.055
090	6C050-42890	SPRING	1				0.04	0.088
100	6C070-42880	ROD DIFF.LOCK	1				0.12	0.264
110	05511-50215	PIN SPLIT	1				0.001	0.0022
120	05525-50800	PIN SNAP	1				0.001	0.0022

silverhorn.co.uk

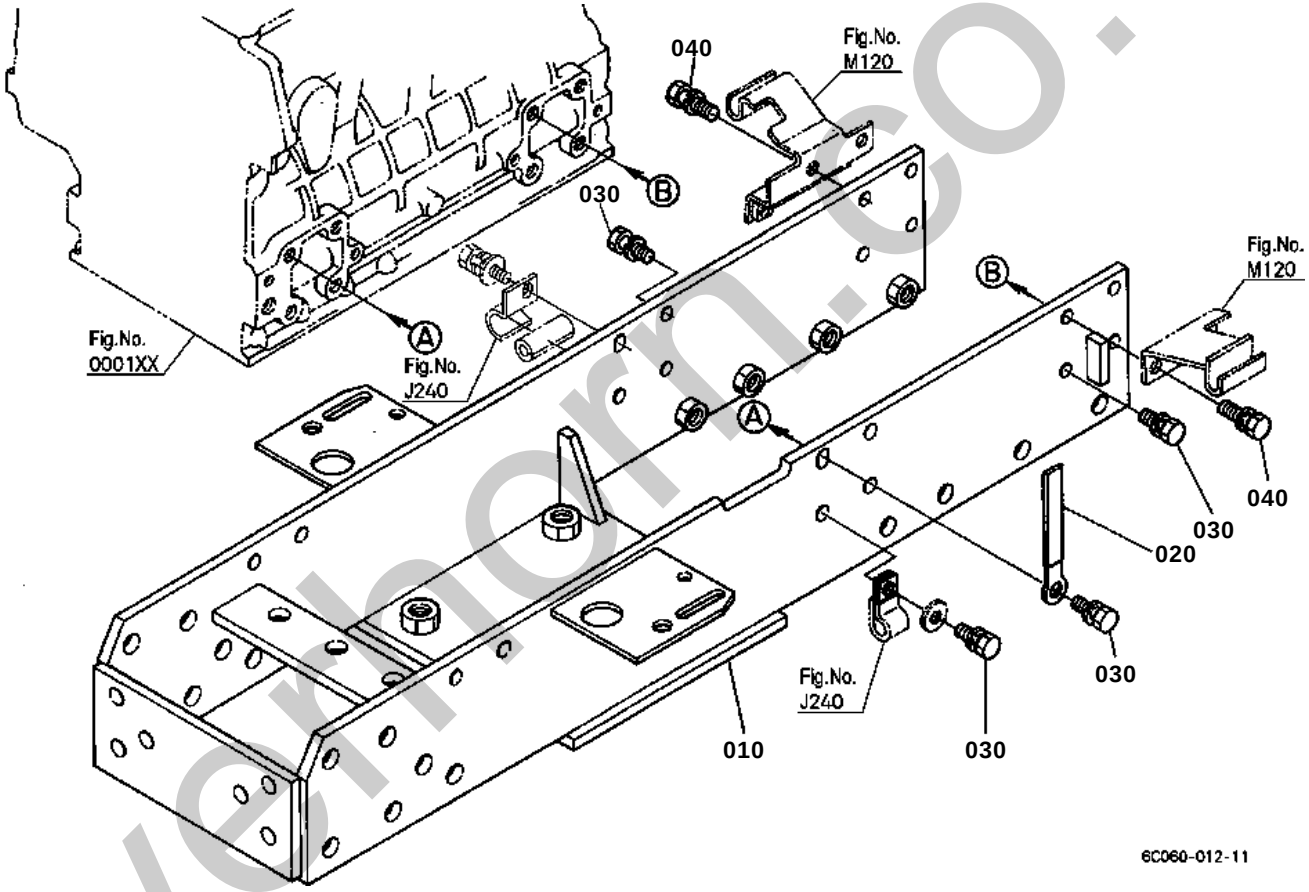

silverthorn.co.uk

FRONT AXLE FRAME

↔ Interchangeable; ≠ not interchangeable; ← new for old; → old for new

REF.No	Part No.	Description	Q'ty	S.No.	I/C	REMARKS	Weight (kgf)	Weight (lb)
010	6C070-51210	COMP.FRAME FRONT	1				20	44
020	35340-29380	CLAMP CORD	1				0.01	0.022
030	01133-51025	BOLT	11				0.023	0.0506
040	01133-51030	BOLT	4				0.025	0.055

silverhorn.co.uk

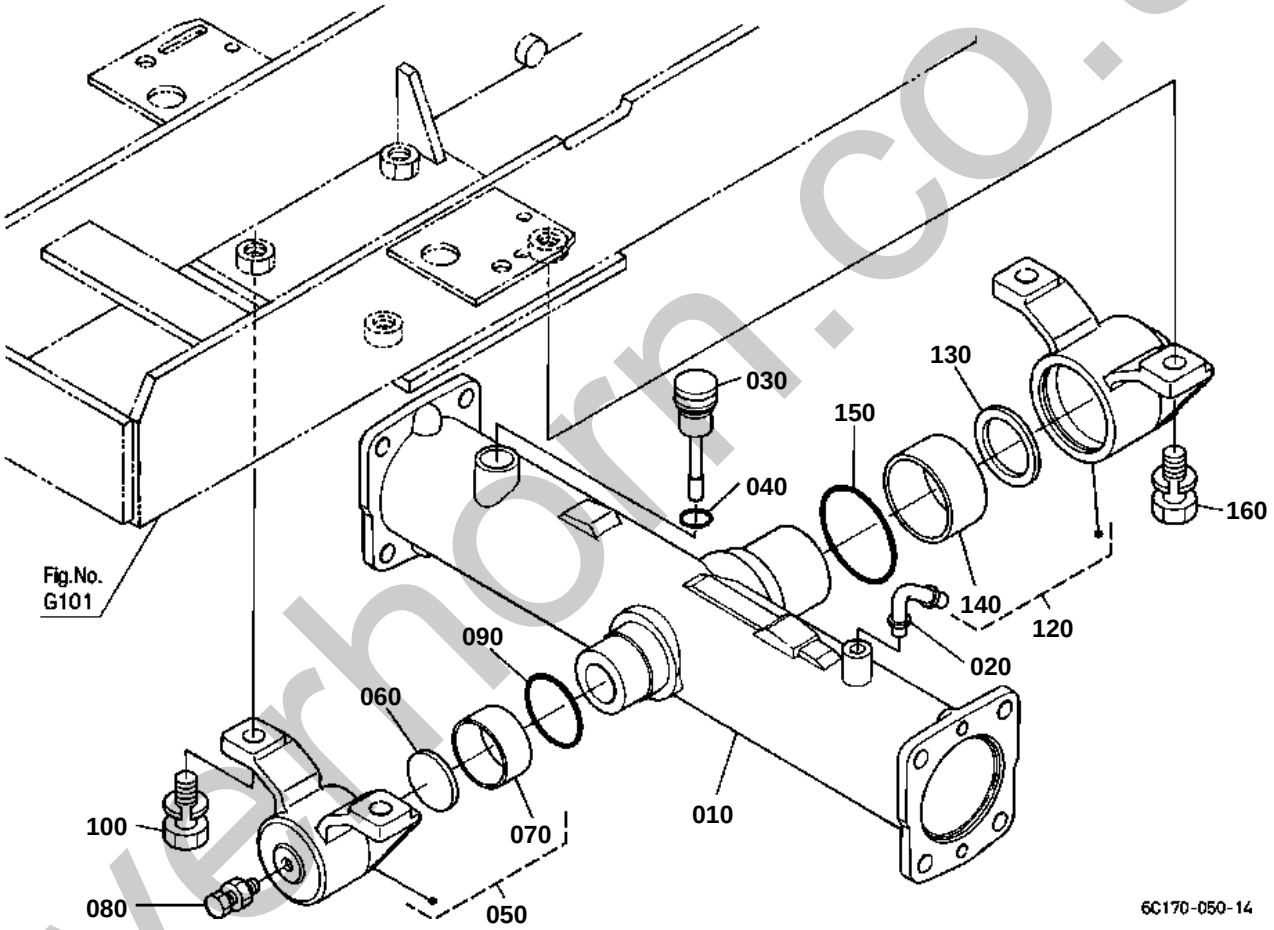

silverhorn.co.uk

OLD PARTS

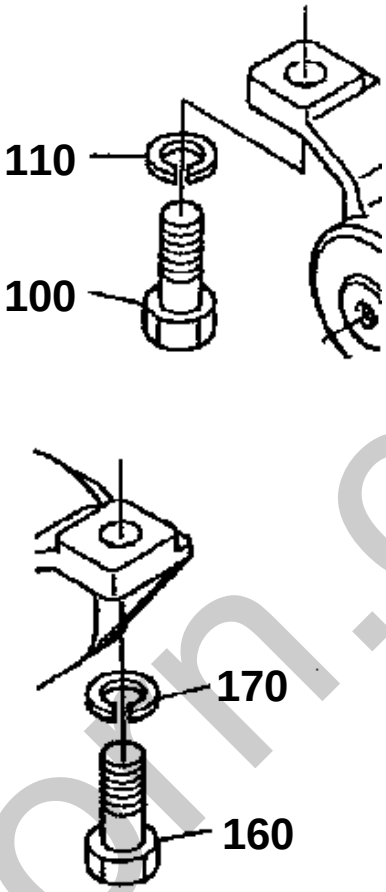

6C060-800-10

silverhorn.co.uk

FRONT AXLE CASE

↔ Interchangeable; ≠ not interchangeable; ← new for old; → old for new

REF.No	Part No.	Description	Q'ty	S.No.	I/C	REMARKS	Weight (kgf)	Weight (lb)
010	6C070-56113	CASE FRONT AXLE	1				8.5	18.7
020	6C040-36070	PIPE BREATHER	1				0.018	0.0396
030	6C040-56123	GAUGE OIL	1				0.024	0.0528
040	04816-00180	O RING	1				0.002	0.0044
050	6C070-56170	ASSY HOLDER	1				1.57	3.454
060	37410-56180	COLLAR THRUST	1				0.06	0.132
070	08511-05025	BUSH	1				0.078	0.1716
080	6C040-56170	COMP.BOLT FRONT AXLE	1				0.04	0.088
090	04811-50550	O RING	1				0.002	0.0044
100	01173-51645	BOLT	2	<=50904			0.092	0.2024
100	01133-51645	BOLT	2	>=50905	┐		0.102	0.2244
110	04512-60160	WASHER SPRING	2	<=50904			0.01	0.022
120	6C170-56180	ASSY HOLDER	1				1.92	4.224
130	37410-56270	COLLAR THRUST	1				0.035	0.077
140	08511-06530	BUSH	1				0.12	0.264
150	04811-50700	O RING	1				0.002	0.0044
160	01173-51645	BOLT	2	<=50904			0.092	0.2024
160	01133-51645	BOLT	2	>=50905	┐		0.102	0.2244
170	04512-60160	WASHER SPRING	2	<=50904			0.01	0.022

silverhorn.co.uk

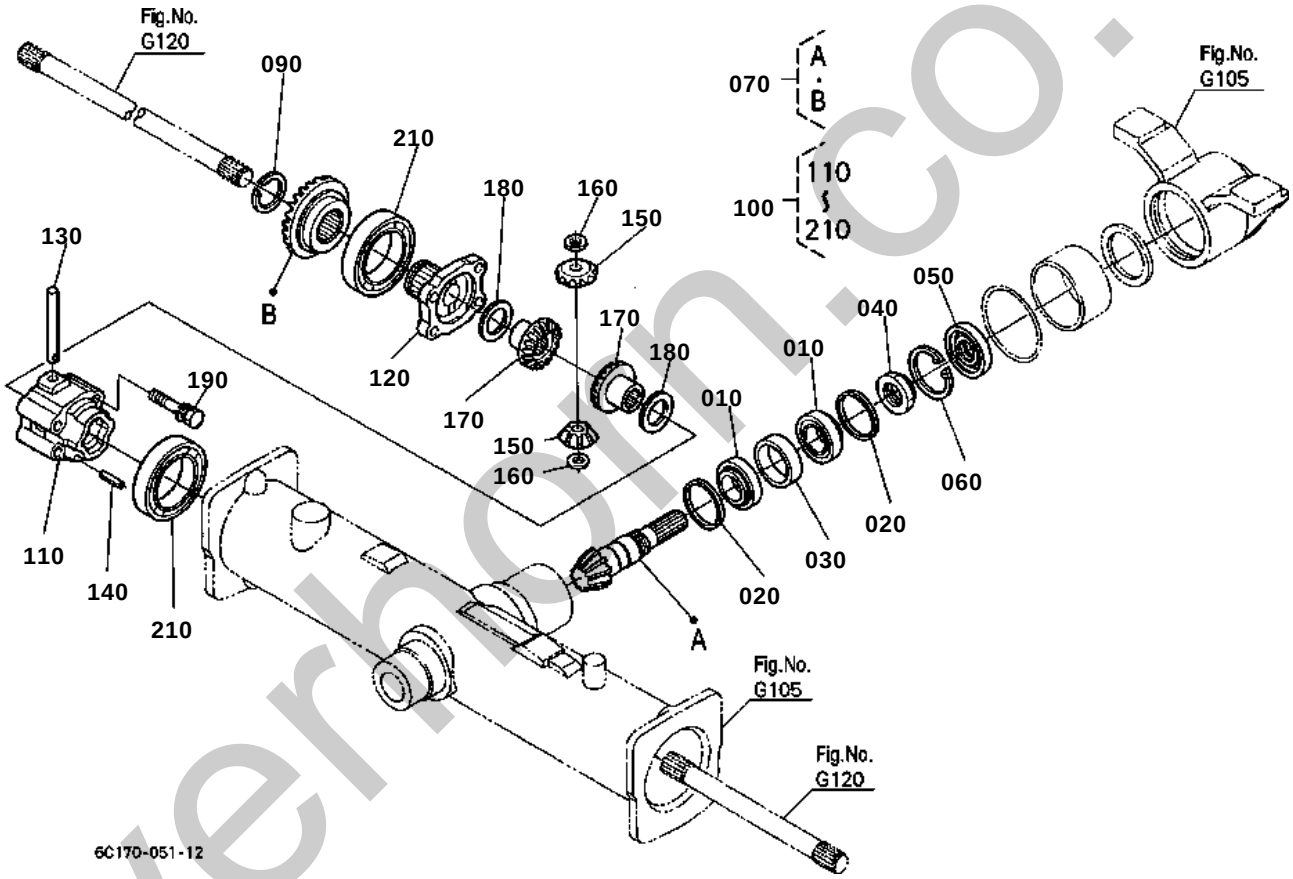

silverhorn.co.uk

↔ Interchangeable; ≠ not interchangeable; ← new for old; → old for new

REF.No	Part No.	Description	Q'ty	S.No.	I/C	REMARKS	Weight (kgf)	Weight (lb)
010	08711-30205	BEARING TAPER-ROLLER	2				0.148	0.3256
020	37410-58160	COLLAR	2			3.4mm	0.01	0.022
020	37410-58170	COLLAR	2			3.6mm	0.01	0.022
020	37410-58150	COLLAR	2			3.8mm	0.01	0.022
020	37410-58120	COLLAR	2			4.0mm	0.01	0.022
020	37410-58130	COLLAR	2			4.1mm	0.01	0.022
020	37410-58140	COLLAR	2			4.2mm	0.01	0.022
020	37410-56680	COLLAR	2			4.4mm	0.015	0.033
020	37410-56660	COLLAR	2			4.6mm	0.011	0.0242
030	37410-56690	COLLAR	1				0.04	0.088
040	37410-56710	NUT	1				0.03	0.066
050	32721-56720	SEAL OIL	1				0.12	0.264
060	04611-00520	CIR CLIP INTERNAL	1				0.009	0.0198
070	6C040-97960	ASSY GEAR BEVEL	1			11-20T	0.96	2.112
080	99999-99999	BLANK	0				0	0
090	6C040-56820	CIR CLIP EXTERNAL	1				0.003	0.0066
100	6C140-56900	ASSY DIFF.FRONT	1				2.03	4.466
110	6C040-56830	CASE DIFF.FRONT	1				0.73	1.606
120	6C040-56840	COVER DIFF.CASE	1				0.3	0.66
130	6C040-56850	SHAFT DIFF.PINION	1				0.05	0.11
140	05411-00425	PIN SPRING	1				0.001	0.0022
150	6C040-56860	GEAR BEVEL	2			10T	0.044	0.0968
160	6C040-56880	SHIM	2			0.8mm	0.001	0.0022
160	6C040-56870	SHIM	2			1.0mm	0.002	0.0044
160	6C040-56890	SHIM	2			1.2mm	0.002	0.0044
170	6C040-56910	GEAR BEVEL	2			14T	0.107	0.2354
180	37410-56920	SHIM	2			0.8mm	0.005	0.011
180	37410-56930	SHIM	2			1.0mm	0.005	0.011
180	37410-56940	SHIM	2			1.2mm	0.01	0.022
190	01128-50855	BOLT	4				0.023	0.0506
200	99999-99999	BLANK	0				0	0
210	6C140-14980	BEARING BALL	2				0.26	0.572
210	08101-06010	BEARING BALL	2		«		0.262	0.5764

silverhorn.co.uk

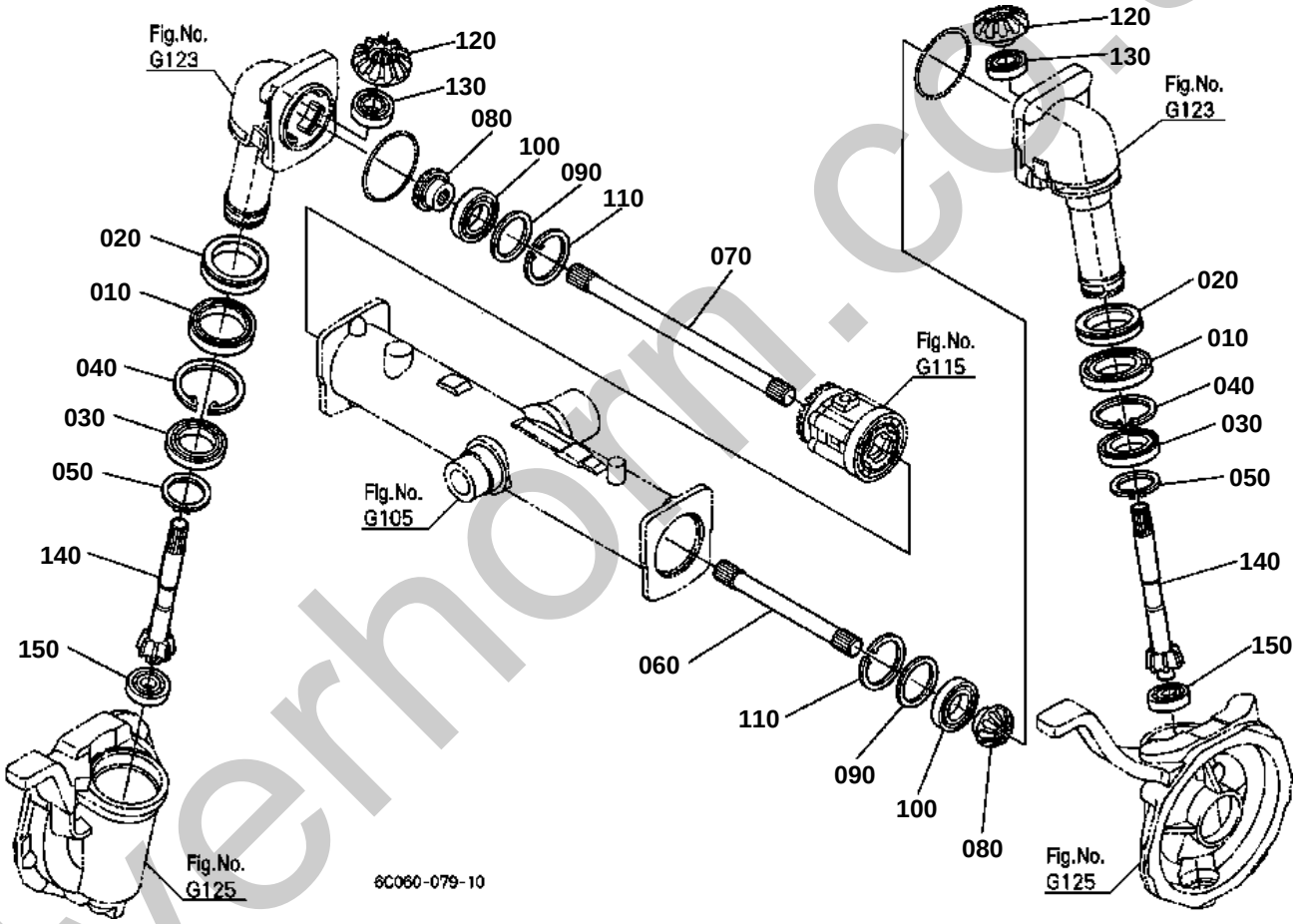

silverhorn.co.uk

DIFFERENTIAL GEAR SHAFT

↔ Interchangeable; ≠ not interchangeable; ← new for old; → old for new

REF.No	Part No.	Description	Q'ty	S.No.	I/C	REMARKS	Weight (kgf)	Weight (lb)
010	08101-06911	BEARING BALL	2				0.2	0.44
020	32721-56223	SEAL OIL	2				0.069	0.1518
030	08101-06910	BEARING BALL	2				0.14	0.308
040	04611-00720	CIR CLIP INTERNAL	2				0.018	0.0396
050	04612-00500	CIR CLIP EXTERNAL	2				0.009	0.0198
060	6A100-57110	SHAFT YOKE LH	1				0.46	1.012
070	6A100-57120	SHAFT YOKE RH	1				0.75	1.65
080	37410-57130	GEAR BEVEL	2			11T	0.25	0.55
090	6C040-57140	SHIM	2			0.8mm	0.006	0.0132
090	6C040-57130	SHIM	2			1.0mm	0.008	0.0176
090	6C040-57150	SHIM	2			1.2mm	0.009	0.0198
090	6C040-57160	SHIM	2			1.4mm	0.011	0.0242
100	08101-06007	BEARING BALL	2				0.16	0.352
110	04611-00620	CIR CLIP INTERNAL	2				0.011	0.0242
120	37410-57180	GEAR BEVEL	2			16T	0.32	0.704
130	67910-14230	BEARING BALL	2				0.084	0.1848
140	6C070-57213	SHAFT GEAR	2			7T	0.73	1.606
150	08101-06304	BEARING BALL	2				0.146	0.3212

silverhorn.co.uk

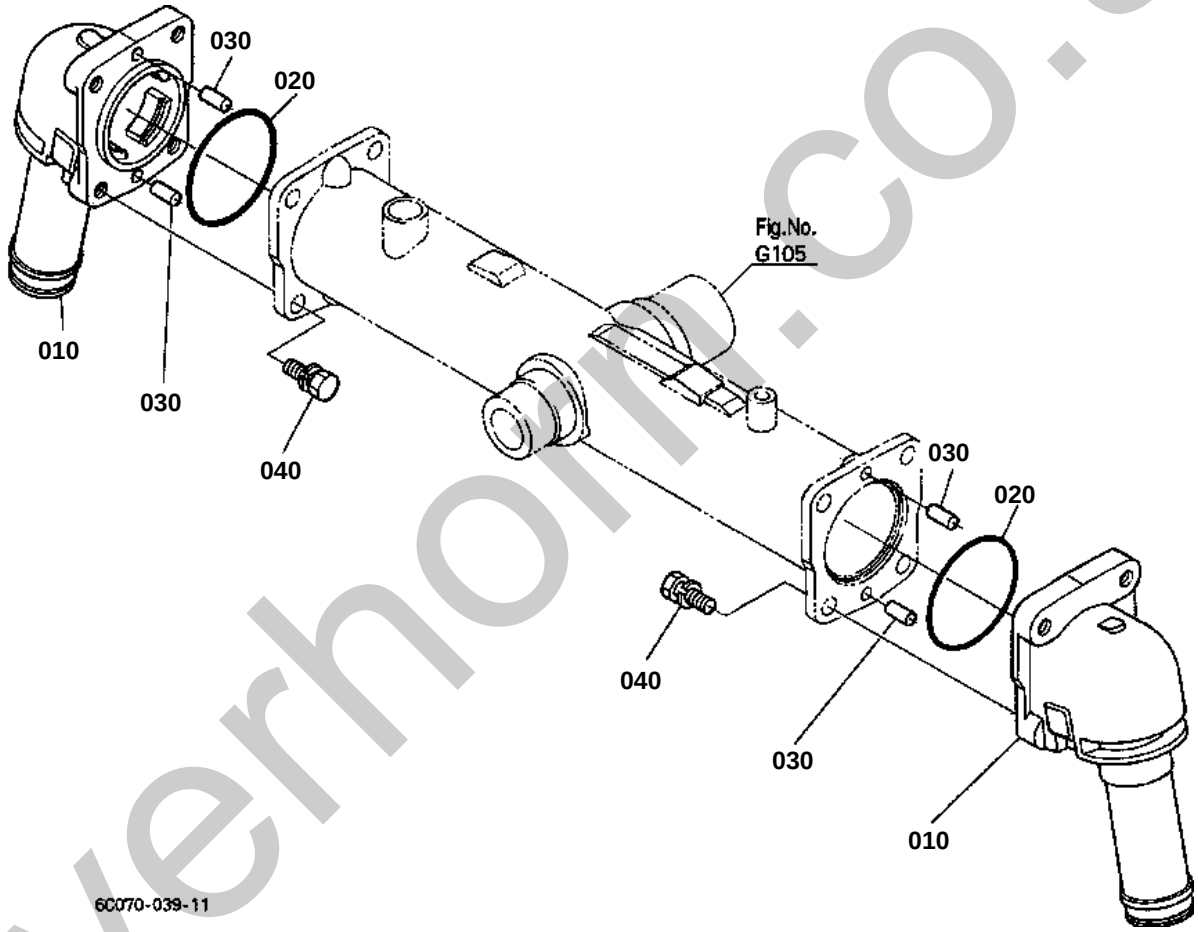

silverhorn.co.uk

BEVEL GEAR CASE

↔ Interchangeable; ≠ not interchangeable; ← new for old; → old for new

REF.No	Part No.	Description	Q'ty	S.No.	I/C	REMARKS	Weight (kgf)	Weight (lb)
010	6C070-56210	CASE BEVEL GEAR	2				3.57	7.854
020	04811-50850	O RING	2				0.003	0.0066
030	05012-01020	PIN STRAIGHT	4				0.013	0.0286
040	01133-51230	BOLT	8				0.04	0.088

silverhorn.co.uk

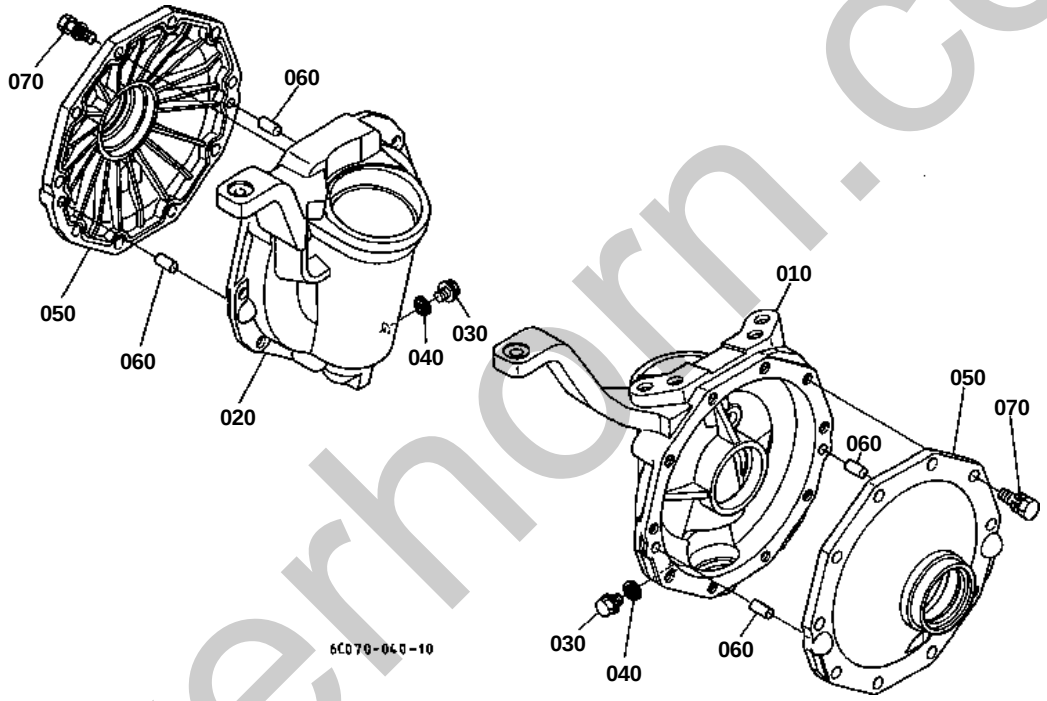

silverhorn.co.uk

FRONT AXLE CASE

↔ Interchangeable; ≠ not interchangeable; ← new for old; → old for new

REF.No	Part No.	Description	Q'ty	S.No.	I/C	REMARKS	Weight (kgf)	Weight (lb)
010	6C070-56360	CASE GEAR LH	1				7.52	16.544
020	6C070-56370	CASE GEAR RH	1				7.2	15.84
030	01774-51010	BOLT FLANGE	2				0.08	0.176
040	04717-01000	WASHER WITH RUBBER	2				0.001	0.0022
050	6C040-56345	COVER GEAR CASE	2				0.84	1.848
060	05012-01018	PIN STRAIGHT	4	<=64279			0.012	0.0264
060	05012-01020	PIN STRAIGHT	4	>=64280	1		0.013	0.0286
070	01133-51028	BOLT	20				0.027	0.0594

silverhorn.co.uk

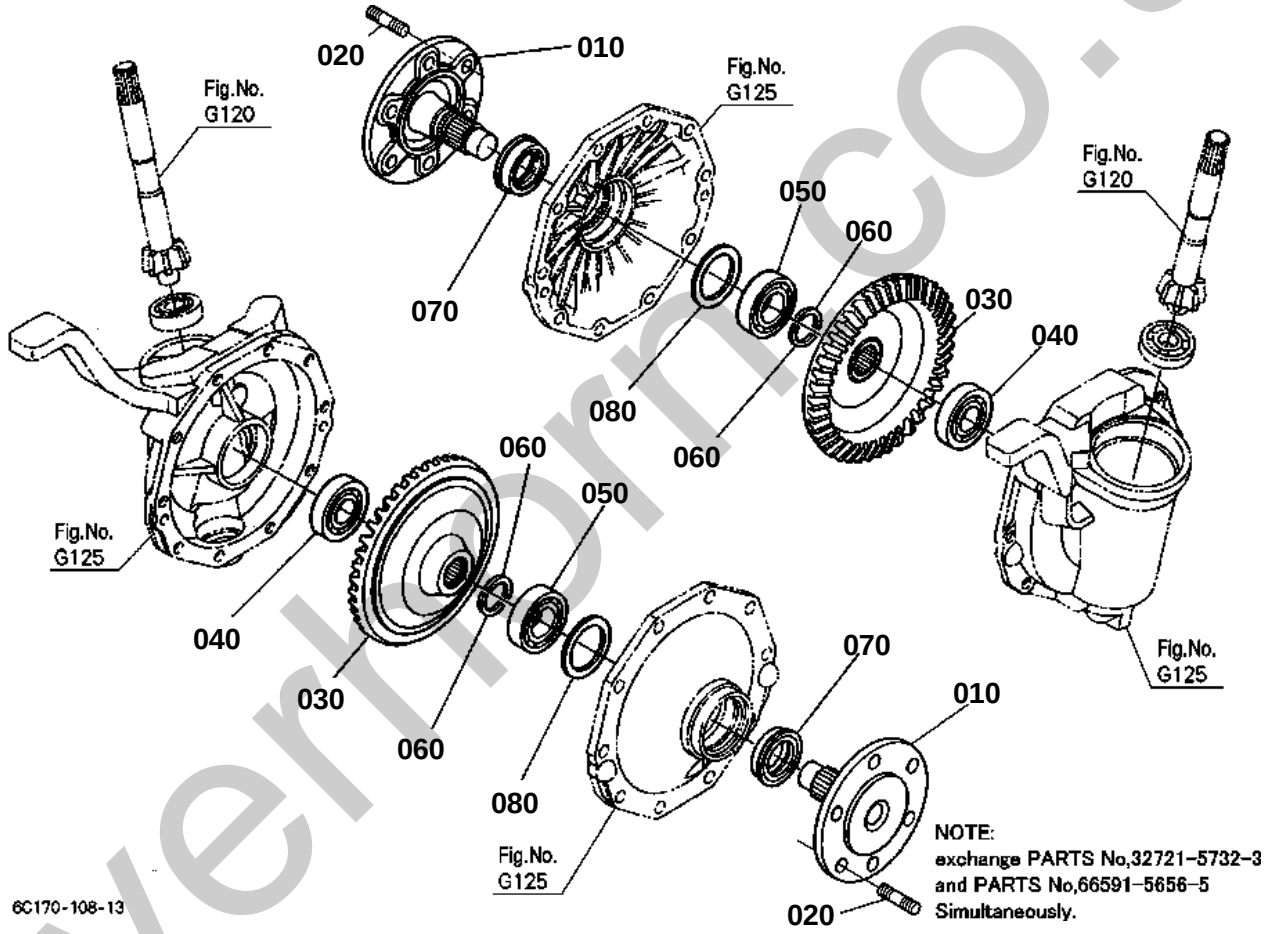

silverthorncco.uk

FRONT AXLE

↔ Interchangeable; ≠ not interchangeable; ← new for old; → old for new

REF.No	Part No.	Description	Q'ty	S.No.	I/C	REMARKS	Weight (kgf)	Weight (lb)
010	32721-57323	SHAFT FRONT AXLE	2			SEE NOTE	1.74	3.828
020	66591-56565	BOLT STUD	12			SEE NOTE	0	0
030	6C070-57310	GEAR BEVEL	2			41T	2.98	6.556
040	08101-06305	BEARING BALL	2				0.23	0.506
050	08101-06206	BEARING BALL	2				0.196	0.4312
060	67156-56820	COLLAR SET	4				0.004	0.0088
070	37410-57340	SEAL OIL	2				0.045	0.099
080	67211-14990	SHIM DIFF.GEAR SHAFT	2			0.3mm	0.002	0.0044
080	66621-15240	SHIM DIFF.GEAR SHAFT	2			0.2mm	0.001	0.0022

silverhorn.co.uk

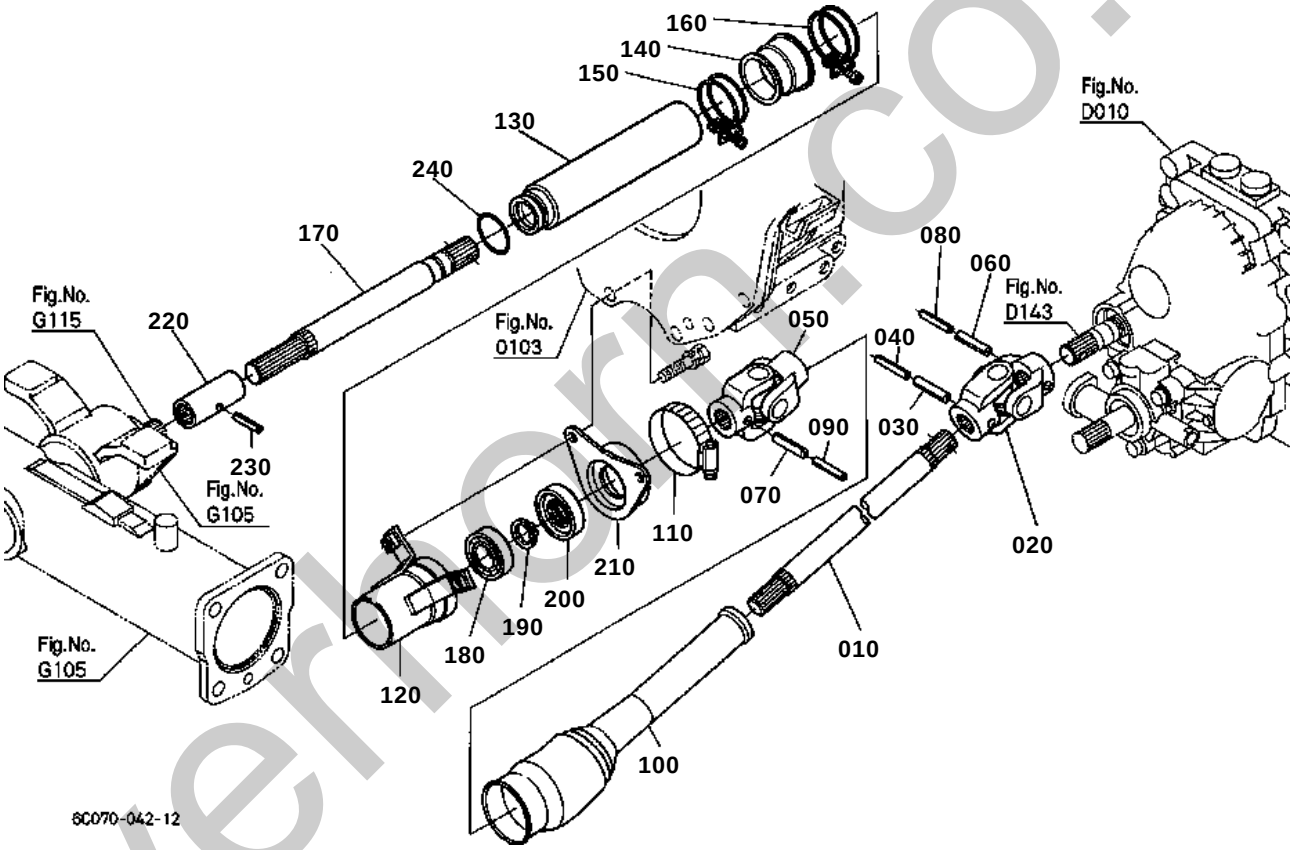

silverhorn.co.uk

FRONT DRIVE SHAFT

↔ Interchangeable; ≠ not interchangeable; ← new for old; → old for new

REF.No	Part No.	Description	Q'ty	S.No.	I/C	REMARKS	Weight (kgf)	Weight (lb)
010	6C050-57512	SHAFT DRIVE REAR	1				1.17	2.574
020	6C040-57500	ASSY JOINT UNIVERSAL	1				0.6	1.32
030	05411-00640	PIN SPRING	1				0.006	0.0132
040	32721-57680	PIN SPRING	1				0.002	0.0044
050	6C040-57542	ASSY JOINT UNIVERSAL	1				0.69	1.518
060	05411-00640	PIN SPRING	1				0.006	0.0132
070	05411-00640	PIN SPRING	1				0.006	0.0132
080	32721-57680	PIN SPRING	1				0.002	0.0044
090	32721-57680	PIN SPRING	1				0.002	0.0044
100	6C040-57550	COVER	1				0.04	0.088
110	66103-58310	BAND	1				0.02	0.044
120	6C040-57610	COVER FRONT SHAFT	1				0.248	0.5456
130	6C070-57660	COVER FRONT SHAFT	1				0.35	0.77
140	6C040-57650	COVER FRONT SHAFT	1				0.035	0.077
150	09318-89052	CLAMP HOSE	1				0.03	0.066
160	09318-89058	CLAMP HOSE	1				0.028	0.0616
170	6C070-57620	SHAFT FRONT DRIVE	1				1.03	2.266
180	08141-06204	BEARING BALL	1				0.101	0.2222
190	04612-00200	CIR CLIP EXTERNAL	1				0.001	0.0022
200	6C040-57630	SEAL OIL	1				0.025	0.055
210	6C040-57640	SUPPORT	1				0.14	0.308
220	T0070-14710	COUPLING	1				0.16	0.352
230	05411-00430	PIN SPRING	1				0.002	0.0044
240	04816-06370	O RING	1				0.003	0.0066

silverhorn.co.uk

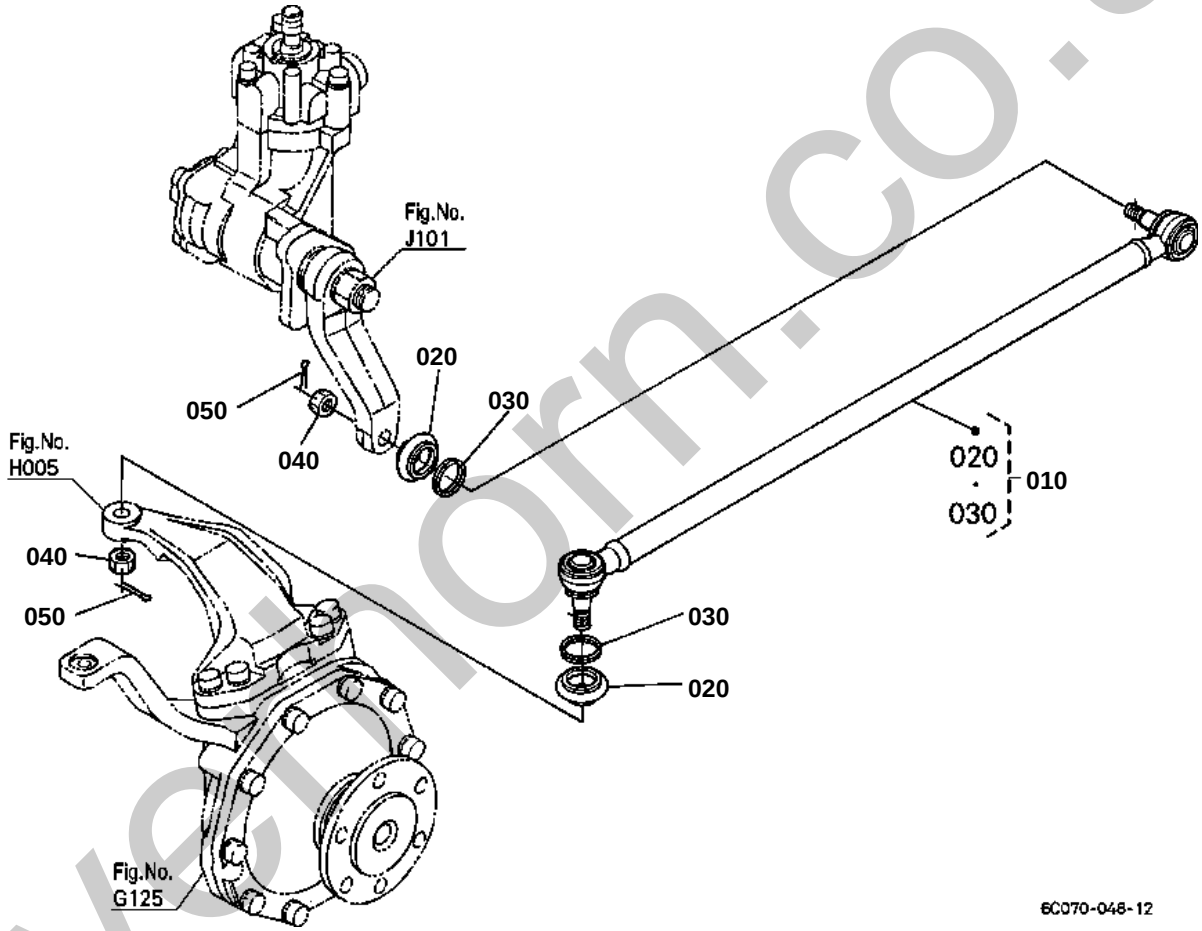

silverthorn.co.uk

DRAG LINK

↔ Interchangeable; ≠ not interchangeable; ← new for old; → old for new

REF.No	Part No.	Description	Q'ty	S.No.	I/C	REMARKS	Weight (kgf)	Weight (lb)
010	6C070-57710	ASSY LINK DRAG	1				2.43	5.346
020	38240-12650	COVER DUST	2				0.01	0.022
030	38240-12660	CLIP	2				0.005	0.011
040	38240-12830	NUT	2				0.008	0.0176
050	05511-50325	PIN SPLIT	2	<=62581			0.002	0.0044
050	05511-50330	PIN SPLIT	2	>=62582	¬		0.005	0.011

silverhorn.co.uk

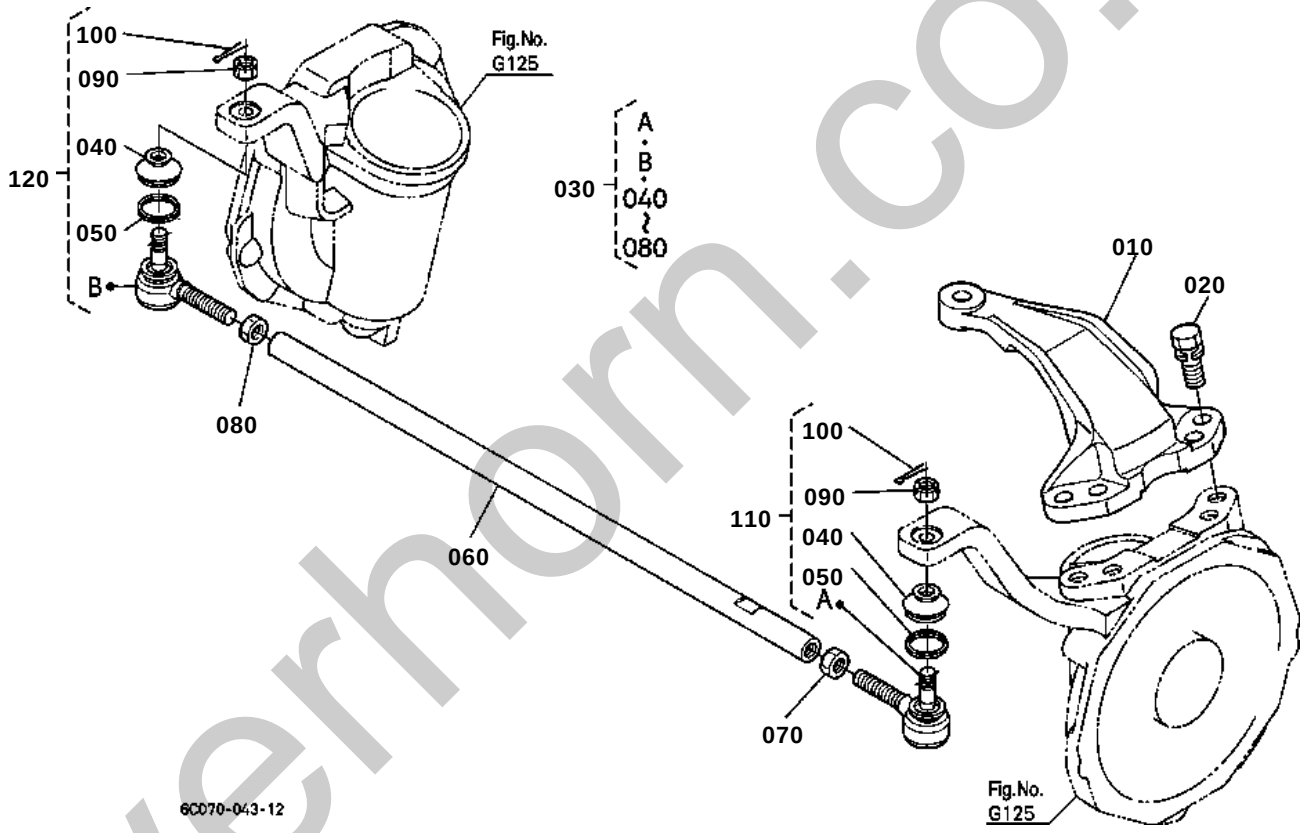

silverhorn.co.uk

TIE ROD

↔ Interchangeable; ≠ not interchangeable; ← new for old; → old for new

REF.No	Part No.	Description	Q'ty	S.No.	I/C	REMARKS	Weight (kgf)	Weight (lb)
010	6C070-56410	ARM KNUCKLE	1				2.15	4.73
020	01138-61235	BOLT	4				0.02	0.044
030	6C070-56420	ASSY ROD TIE	1				1.74	3.828
040	67121-56560	COVER DUST	2				0.008	0.0176
050	67121-56570	CLIP	2				0.003	0.0066
060	6C070-56590	ROD TIE	1				1.31	2.882
070	02172-50120	NUT	1				0.01	0.022
080	67121-56540	NUT	1				0.007	0.0154
090	66591-56780	NUT	2				0.01	0.022
100	05511-52520	PIN SPLIT	2				0.001	0.0022
110	67950-56530	ASSY END ROD RH	1			LH	0.24	0.528
120	67950-56520	ASSY END ROD LH	1			RH	0.24	0.528

silverhorn.co.uk

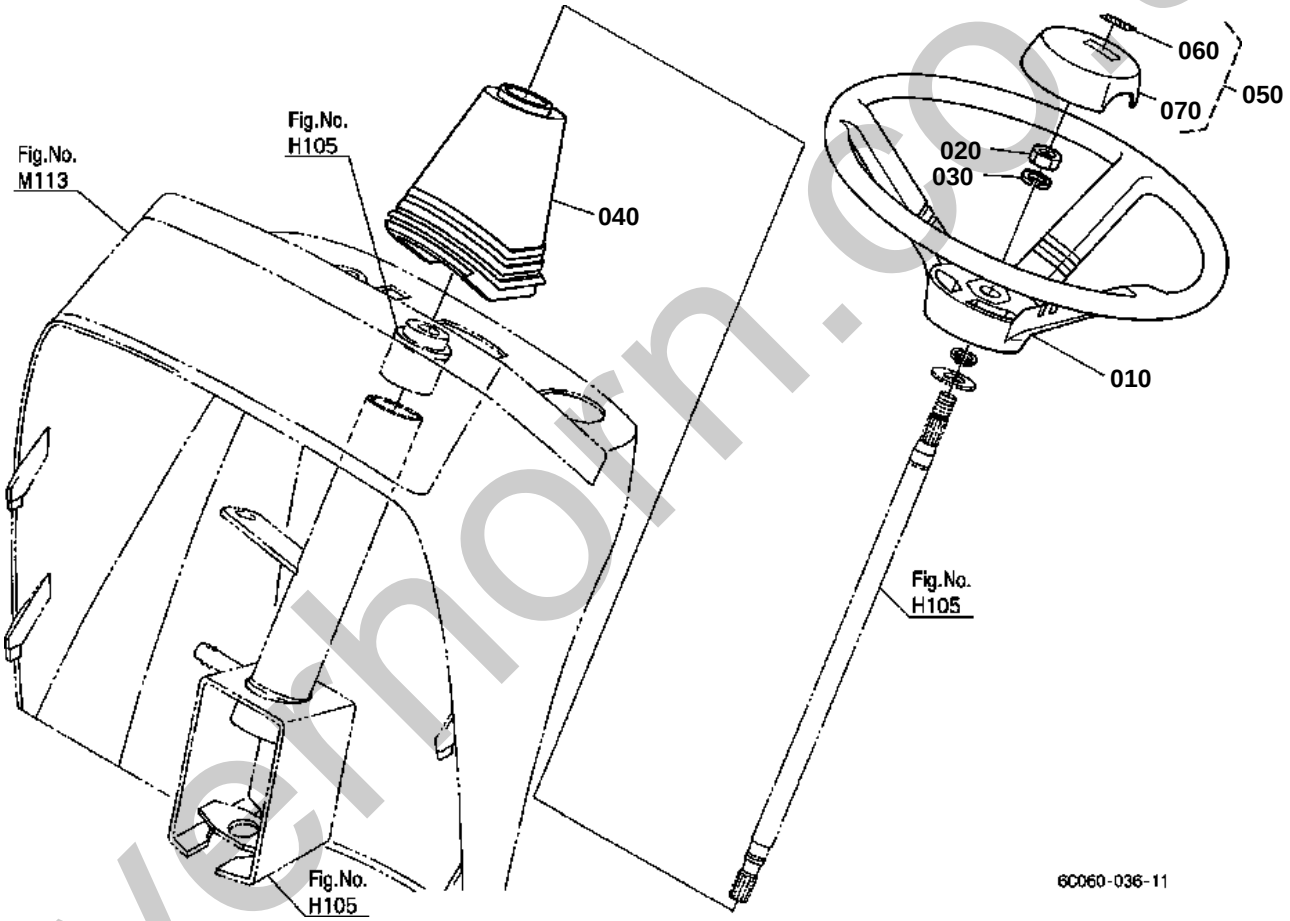

silverthorn.co.uk

STEERING HANDLE

↔ Interchangeable; ≠ not interchangeable; ← new for old; → old for new

REF.No	Part No.	Description	Q'ty	S.No.	I/C	REMARKS	Weight (kgf)	Weight (lb)
010	6C040-41410	WHEEL STEERING	1				1.41	3.102
020	02174-50120	NUT	1				0.01	0.022
030	04512-60120	WASHER SPRING	1				0.005	0.011
040	6C070-53550	BOOT STEERING	1				0.093	0.2046
050	6C040-41420	ASSY PAD	1				0.041	0.0902
060	6C040-41440	MARK STEERING	1				0.001	0.0022
070	6C040-41430	PAD STEERING	1				0.039	0.0858

silverhorn.co.uk

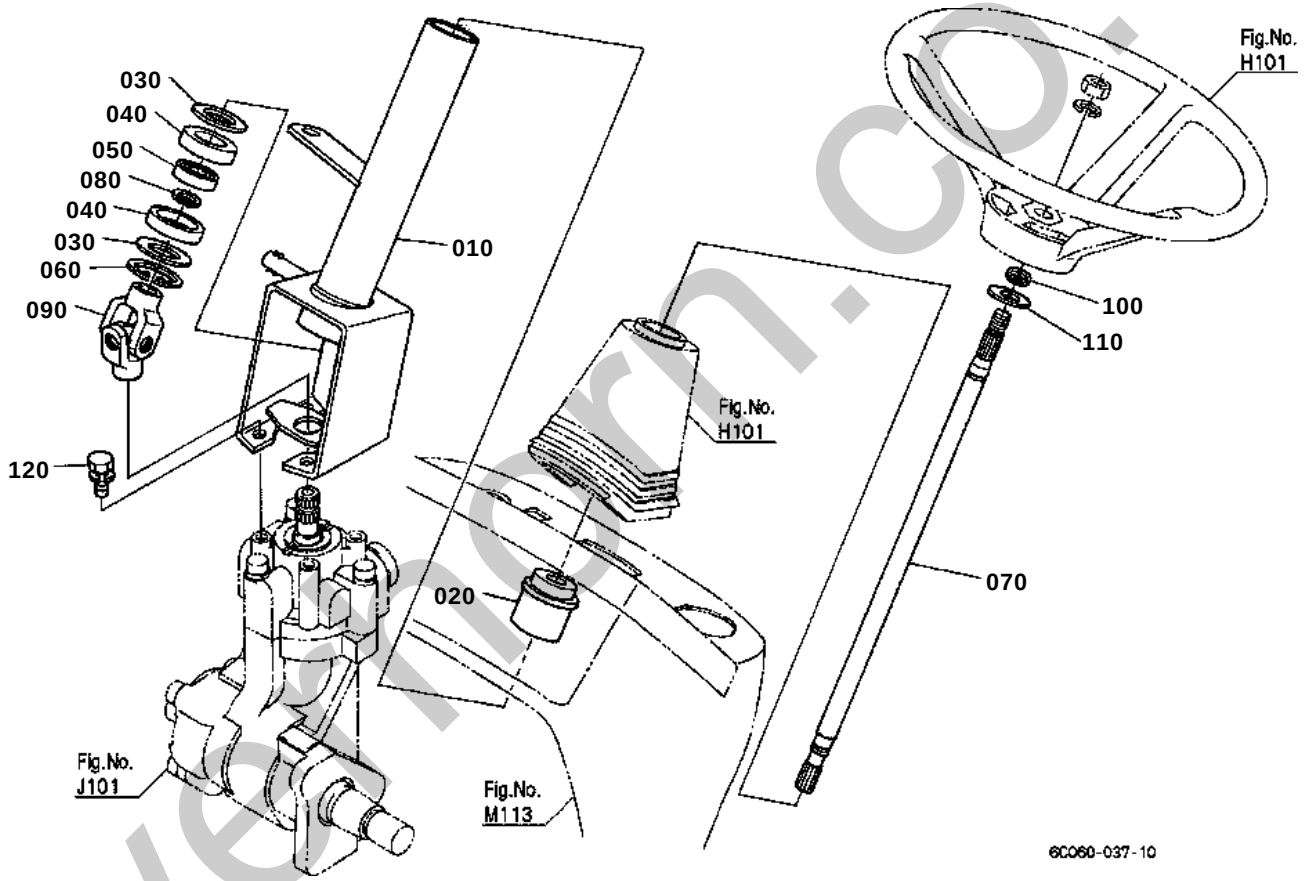

silvermorn.co.uk

STEERING POST

↔ Interchangeable; ≠ not interchangeable; ← new for old; → old for new

REF.No	Part No.	Description	Q'ty	S.No.	I/C	REMARKS	Weight (kgf)	Weight (lb)
010	6C070-41320	POST STEERING	1				1.57	3.454
020	6C040-41510	BUSH	1				0.035	0.077
030	6C040-41390	COLLAR	2				0.007	0.0154
040	6C040-41523	COVER BEARING	2				0.007	0.0154
050	08121-06002	BEARING BALL	1				0.03	0.066
060	04611-00420	CIR CLIP INTERNAL	1				0.006	0.0132
070	6C070-41340	SHAFT STEERING	1				0.5	1.1
080	04612-00150	CIR CLIP EXTERNAL	1				0.001	0.0022
090	6C042-41330	JOINT UNIVERSAL	1				0.27	0.594
100	04612-00160	CIR CLIP EXTERNAL	1				0.001	0.0022
110	04013-60160	WASHER PLAIN	1				0.01	0.022
120	01123-50820	BOLT	4				0.011	0.0242

silverhorn.co.uk

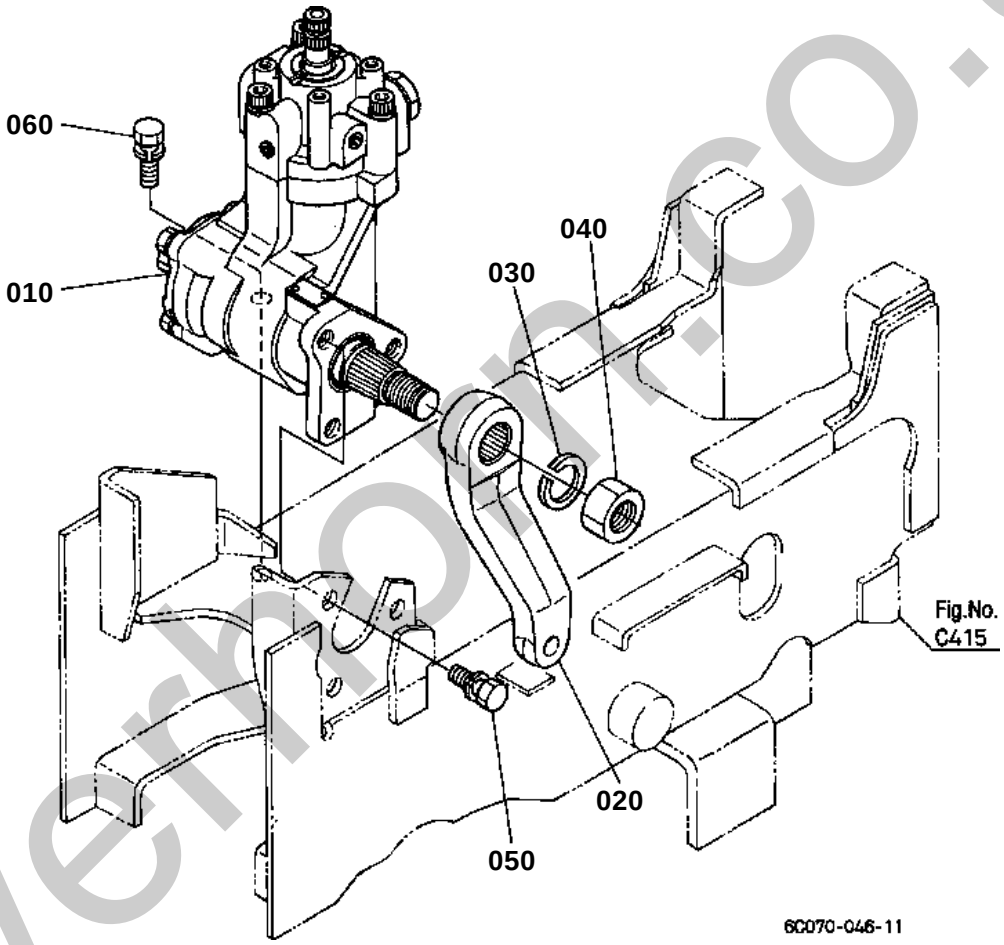

silverhorn.co.uk

HYDRAULIC PUMP(PS)

↔ Interchangeable; ≠ not interchangeable; ← new for old; → old for new

REF.No	Part No.	Description	Q'ty	S.No.	I/C	REMARKS	Weight (kgf)	Weight (lb)
010	6C070-41105	ASSY STEERING POWER	1				11.1	24.42
020	32721-41210	ARM PITMAN	1				1.15	2.53
030	04512-60220	WASHER SPRING	1				0.025	0.055
040	02176-50220	NUT	1				0.058	0.1276
050	01133-51230	BOLT	3				0.04	0.088
060	01133-51235	BOLT	2				0.043	0.0946

silverhorn.co.uk

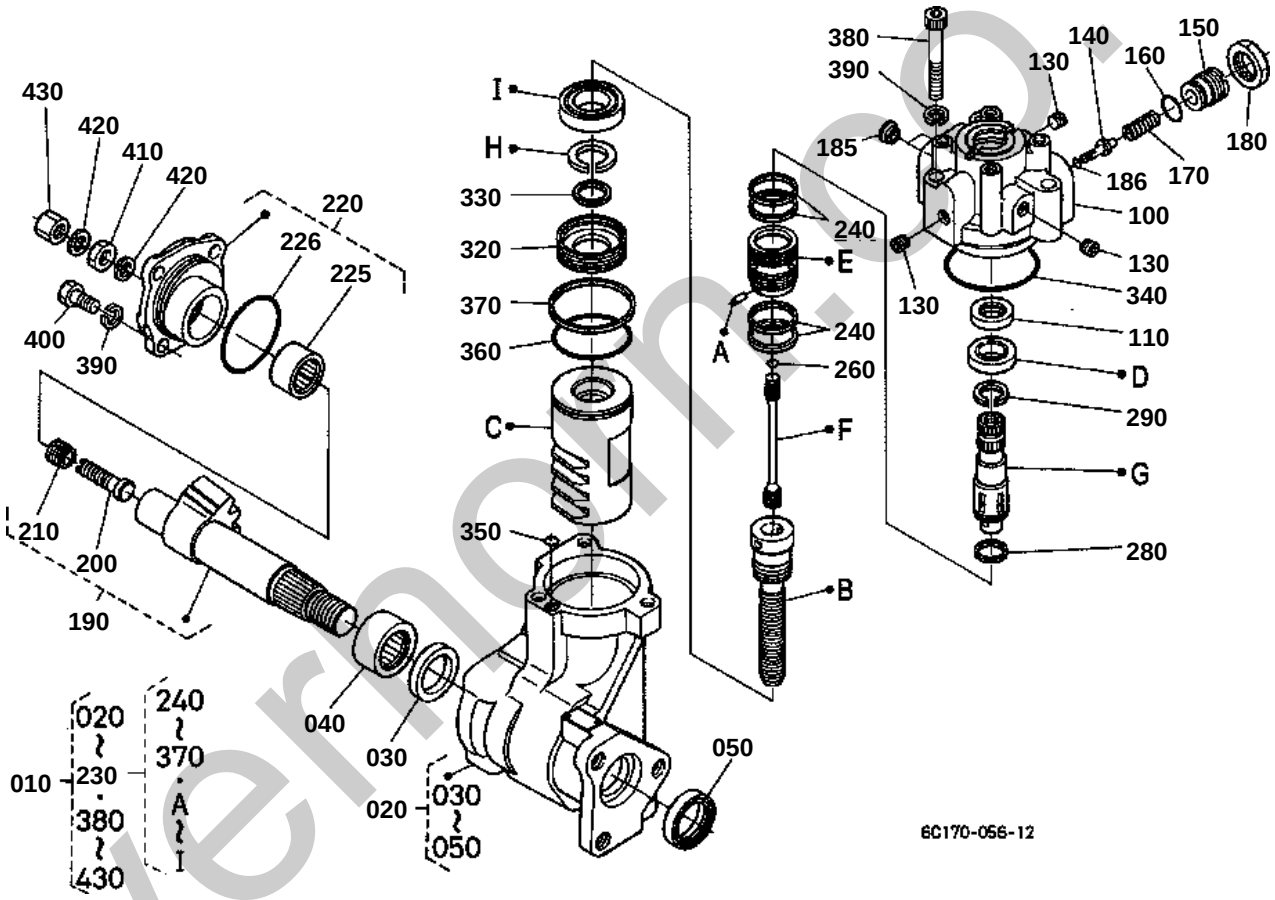

silvermoon.co.uk

HYDRAULIC PUMP(PS) [COMPONENT PARTS]

↔ Interchangeable; ≠ not interchangeable; ← new for old; → old for new

REF.No	Part No.	Description	Q'ty	S.No.	I/C	REMARKS	Weight (kgf)	Weight (lb)
010	6C070-41105	ASSY STEERING POWER	1				11.1	24.42
020	6C070-92000	ASSY CASE GEAR	1				5.23	11.506
030	35270-16140	GASKET	1				0.005	0.011
040	31351-66130	BEARING NEEDLE	1				0.03	0.066
050	35270-16150	SEAL OIL	1				0.015	0.033
060	99999-99999	BLANK	0				0	0
070	99999-99999	BLANK	0				0	0
080	99999-99999	BLANK	0				0	0
090	99999-99999	BLANK	0				0	0
100	6C070-92214	VALVE HOUSING	1				0.83	1.826
110	6A100-92220	SEAL OIL	1				0.006	0.0132
120	99999-99999	BLANK	0				0	0
130	T0430-37090	PLUG	3				0.003	0.0066
140	6C070-92230	POPPET	1				0.005	0.011
150	31351-66370	SCREW ADJUSTING	1				0.047	0.1034
160	31351-66390	O RING	1				0.001	0.0022
170	38430-66380	SPRING	1				0.015	0.033
180	31351-66380	NUT	1				0.022	0.0484
185	6C042-41540	FERRULE	2				0.004	0.0088
186	6C070-92240	O RING	1				0.001	0.0022
190	32721-92300	ASSY SHAFT SECTOR	1				1.3	2.86
200	35270-16620	SCREW ADJUSTING	1				0.028	0.0616
210	35270-16630	BOLT	1				0.011	0.0242
220	6A320-92350	ASSY COVER SIDE	1				0.73	1.606
225	35270-16420	BEARING NEEDLE	1				0.045	0.099
226	04810-50600	O RING	1				0.002	0.0044
230	6C070-92302	ASSY SHAFT PISTON	1				2.57	5.654
240	6A100-92510	SEAL	4				0.002	0.0044
250	99999-99999	BLANK	0				0	0
260	04811-10060	O RING	1				0.001	0.0022
270	99999-99999	BLANK	0				0	0
280	6A100-92540	SQUARE RING	1				0.001	0.0022
290	6A100-92550	RING SNAP	1				0.002	0.0044
300	99999-99999	BLANK	0				0	0
310	99999-99999	BLANK	0				0	0
320	6A600-92030	PLUG	1				0.09	0.198
330	T0430-37170	SEAL	1				0.001	0.0022
340	04811-50650	O RING	1				0.002	0.0044
350	04817-00060	O RING	1				0.002	0.0044
360	04817-50500	O RING	1				0.003	0.0066
370	31351-66280	RING	1				0.002	0.0044
380	6C042-41850	BOLT	3				0.05	0.11
390	04512-60100	WASHER SPRING	7				0.002	0.0044
400	35270-16650	BOLT	4				0.02	0.044
410	66363-41250	NUT	1				0.01	0.022
420	35270-16690	GASKET	2				0.001	0.0022
430	35270-16700	NUT	1				0.11	0.242

silverhorn.co.uk

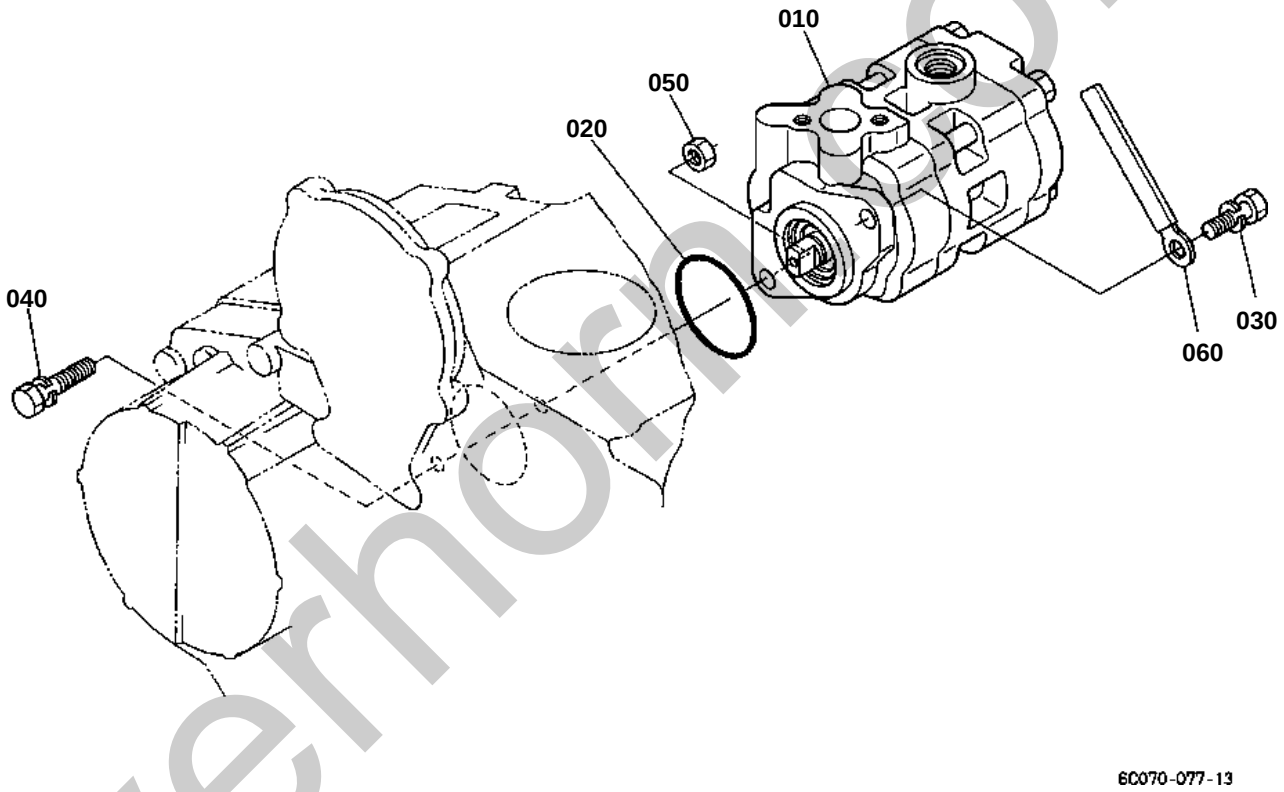

silverhorse.uk

HYDRAULIC PUMP

↔ Interchangeable; ≠ not interchangeable; ← new for old; → old for new

REF.No	Part No.	Description	Q'ty	S.No.	I/C	REMARKS	Weight (kgf)	Weight (lb)
010	6C070-36306	ASSY PUMP HYDRAULIC	1				2.32	5.104
020	04811-10460	O RING	1				0.002	0.0044
030	01123-50825	BOLT	1				0.013	0.0286
040	01123-50835	BOLT	1				0.02	0.044
050	02056-50080	NUT	1				0.005	0.011
060	13824-67590	CLAMP CORD	1				0.002	0.0044

silverhorn.co.uk

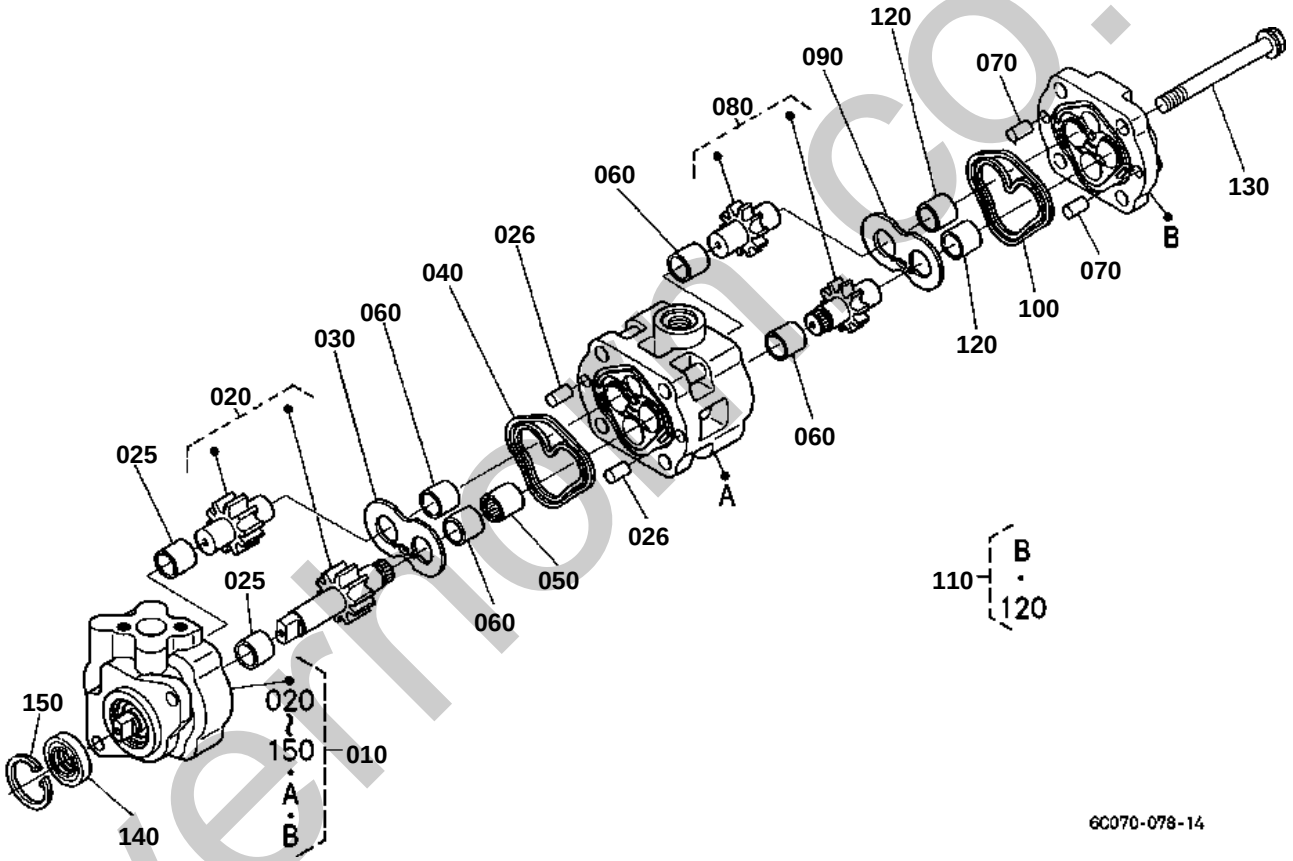

silvermoll.co.uk

HYDRAULIC PUMP [COMPONENT PARTS]

↔ Interchangeable; ≠ not interchangeable; ← new for old; → old for new

REF.No	Part No.	Description	Q'ty	S.No.	I/C	REMARKS	Weight (kgf)	Weight (lb)
010	6C070-36306	ASSY PUMP HYDRAULIC	1				2.32	5.104
020	6C070-36390	COMP.GEAR HYD.PUMP	1				0.3	0.66
025	6A100-37232	BUSH	2				0.005	0.011
026	05012-00814	PIN STRAIGHT	2				0.006	0.0132
030	6C140-36350	PLATE SIDE	1				0.05	0.11
040	6C040-36344	RING DOUBLE	1				0.003	0.0066
050	6A100-37430	COUPLING	1				0.01	0.022
060	6A100-37232	BUSH	4				0.005	0.011
070	05012-00814	PIN STRAIGHT	2				0.006	0.0132
080	6A100-37442	COMP.GEAR HYD.PUMP	1				0.18	0.396
090	6C140-36350	PLATE SIDE	1				0.05	0.11
100	6C040-36344	RING DOUBLE	1				0.003	0.0066
110	6C140-37400	COMP.COVER	1				0.23	0.506
120	6A100-37232	BUSH	2				0.005	0.011
130	01754-51090	BOLT FLANGE	4				0.05	0.11
140	31381-76390	SEAL OIL	1				0.01	0.022
150	04611-00300	CIR CLIP INTERNAL	1				0.004	0.0088

silverhorn.co.uk

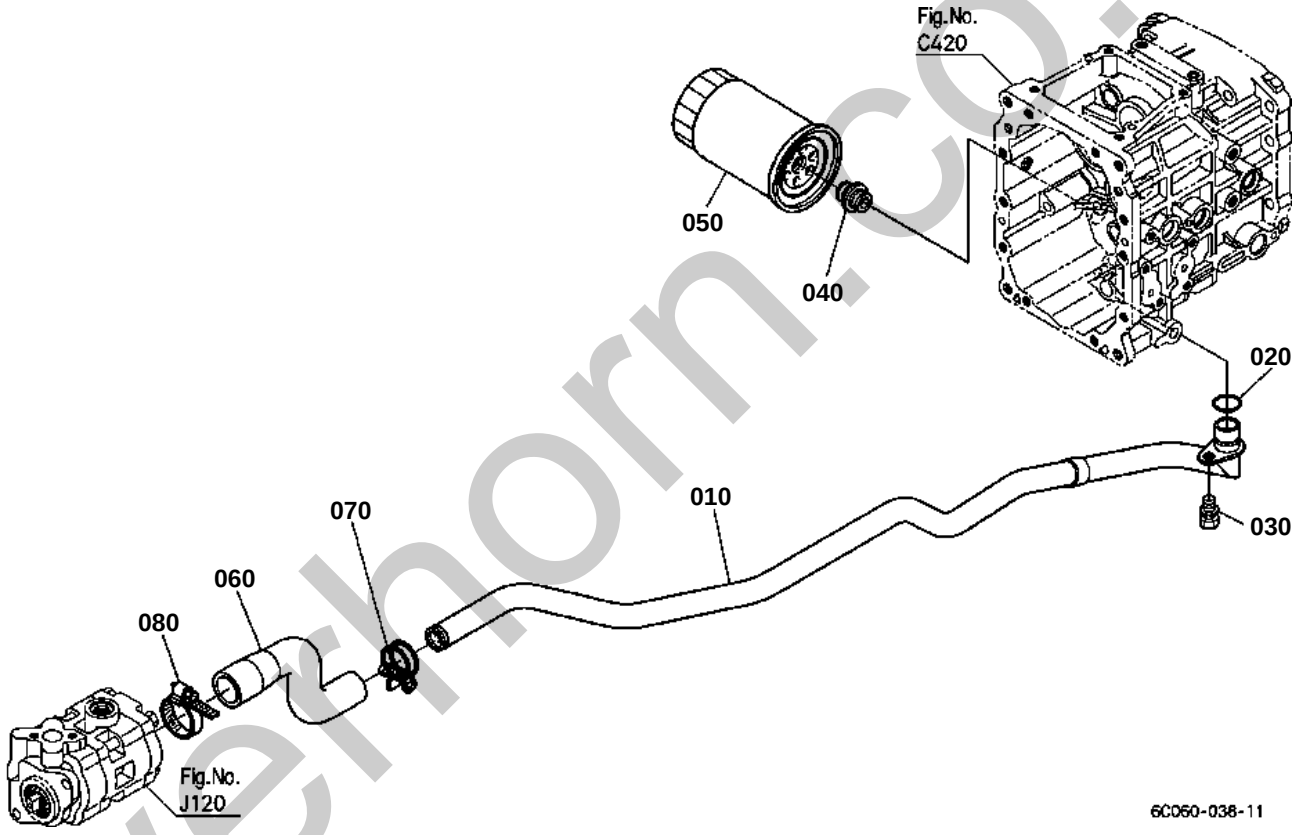

silverhorn.co.uk

HYDRAULIC OIL LINE(SUCTION)

↔ Interchangeable; ≠ not interchangeable; ← new for old; → old for new

REF.No	Part No.	Description	Q'ty	S.No.	I/C	REMARKS	Weight (kgf)	Weight (lb)
010	6C110-39113	PIPE SUCTION	1				0.62	1.364
020	04816-00200	O RING	1				0.003	0.0066
030	01123-50818	BOLT	1				0.012	0.0264
040	38240-37780	JOINT SCREW	1				0.03	0.066
050	67955-37710	CARTRIDGE OIL FILTER	1				0.39	0.858
060	6C070-39150	HOSE INLET	1				0.125	0.275
070	67980-58640	CLAMP HOSE	1				0.02	0.044
080	67955-36230	CLAMP	1				0.023	0.0506

silverhorn.co.uk

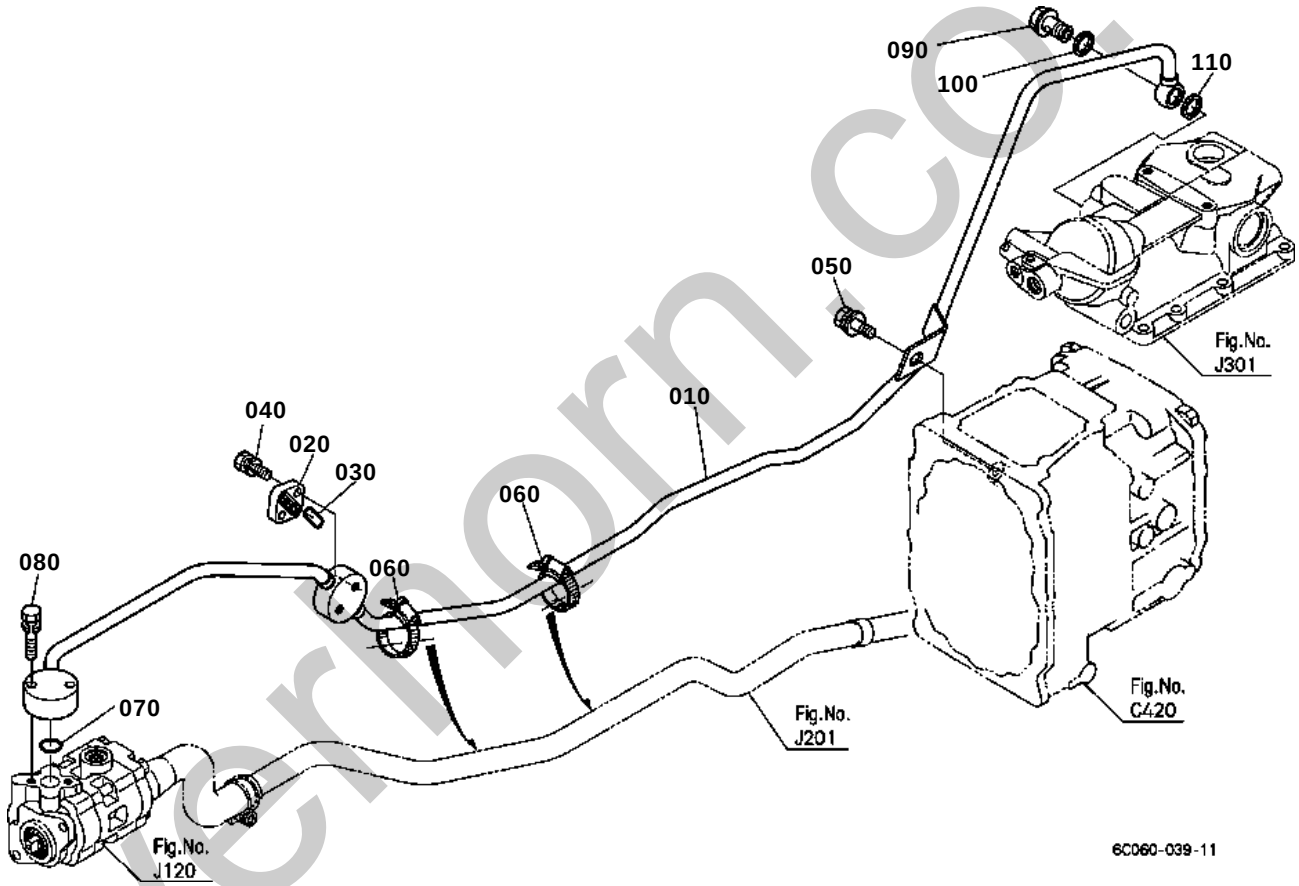

silverthorn.co.uk

HYDRAULIC OIL LINE(DELIVERY)

↔ Interchangeable; ≠ not interchangeable; ← new for old; → old for new

REF.No	Part No.	Description	Q'ty	S.No.	I/C	REMARKS	Weight (kgf)	Weight (lb)
010	6C060-39212	PIPE DELIVERY	1				1.1	2.42
020	6C040-36620	CAP	1				0.022	0.0484
030	37410-36630	O RING	1				0.001	0.0022
040	01123-50830	BOLT	2				0.015	0.033
050	01125-50818	BOLT	1				0.015	0.033
060	67955-36230	CLAMP	2				0.023	0.0506
070	04817-00200	O RING	1				0.011	0.0242
080	01123-50840	BOLT	2				0.018	0.0396
090	6C070-39290	BOLT JOINT	1				0.05	0.11
100	14102-53620	GASKET	1				0.003	0.0066
110	67111-37180	GASKET	1				0.003	0.0066

silverhorn.co.uk

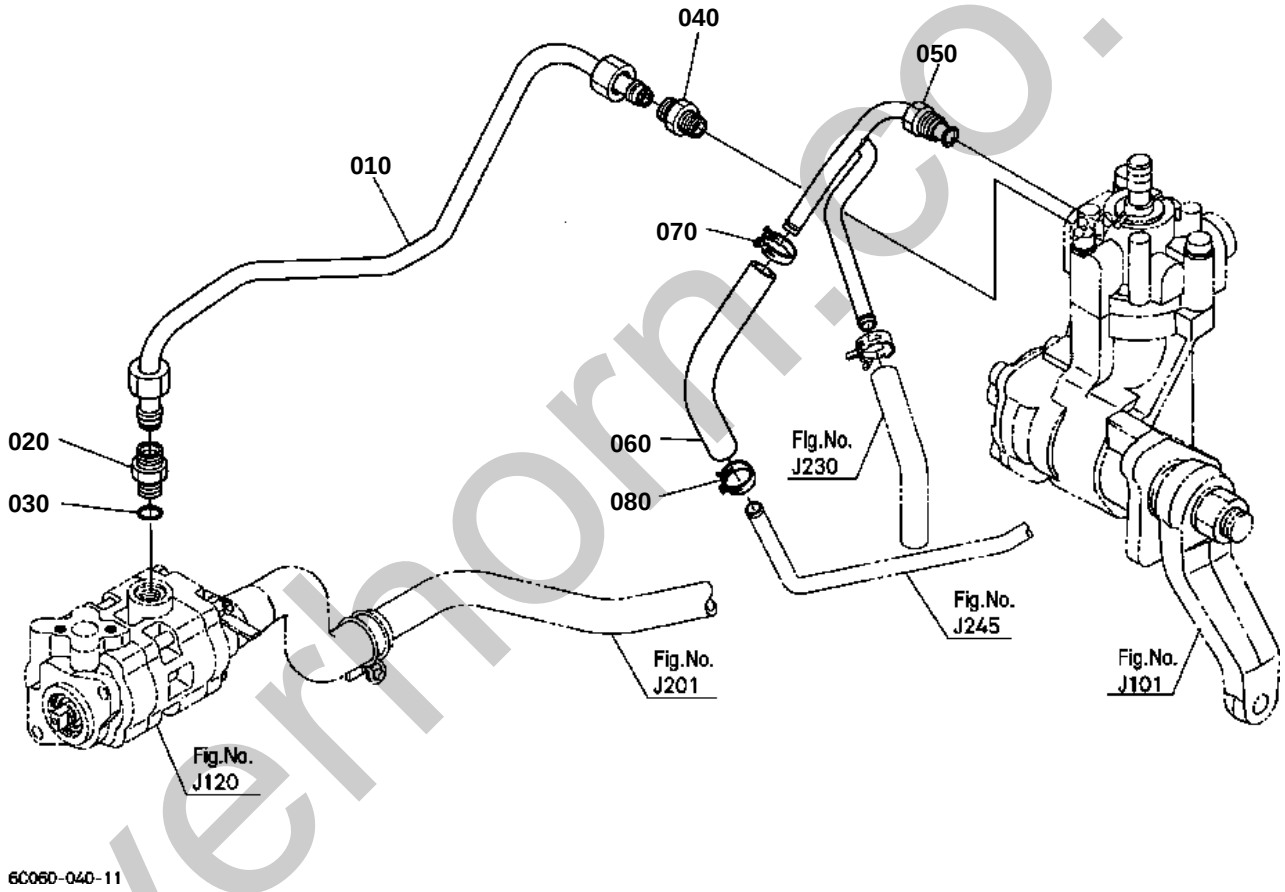

silverhorn.co.uk

HYDRAULIC OIL LINE(STEERING)

↔ Interchangeable; ≠ not interchangeable; ← new for old; → old for new

REF.No	Part No.	Description	Q'ty	S.No.	I/C	REMARKS	Weight (kgf)	Weight (lb)
010	6C170-39220	PIPE DELIVERY	1				0.28	0.616
020	06012-51223	JOINT PIPE	1				0.04	0.088
030	04816-00110	O RING	1				0.001	0.0022
040	6C070-39430	JOINT PIPE	1				0.038	0.0836
050	6C150-39310	PIPE	1				0.084	0.1848
060	6C140-39330	HOSE	1				0.032	0.0704
070	6A600-39330	CLAMP HOSE	1				0.006	0.0132
080	6A600-39330	CLAMP HOSE	1				0.006	0.0132

silverhorn.co.uk

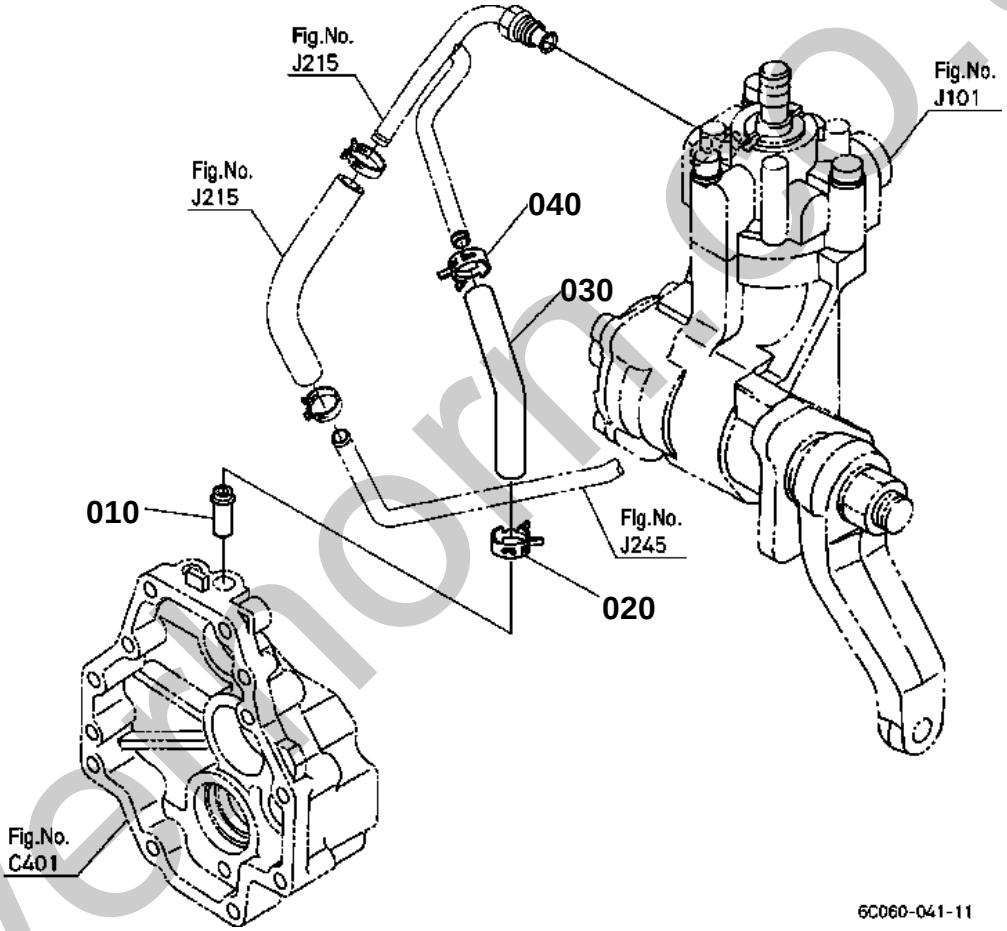

silvermorn.co.uk

HYDRAULIC OIL LINE(T/M)

↔ Interchangeable; ≠ not interchangeable; ← new for old; → old for new

REF.No	Part No.	Description	Q'ty	S.No.	I/C	REMARKS	Weight (kgf)	Weight (lb)
010	6C140-13190	JOINT PIPE	1				0.008	0.0176
020	09318-88125	CLAMP HOSE	1				0.001	0.0022
030	6C050-13140	HOSE HYDRAULIC	1				0.013	0.0286
040	09318-88125	CLAMP HOSE	1				0.001	0.0022

silverhorn.co.uk

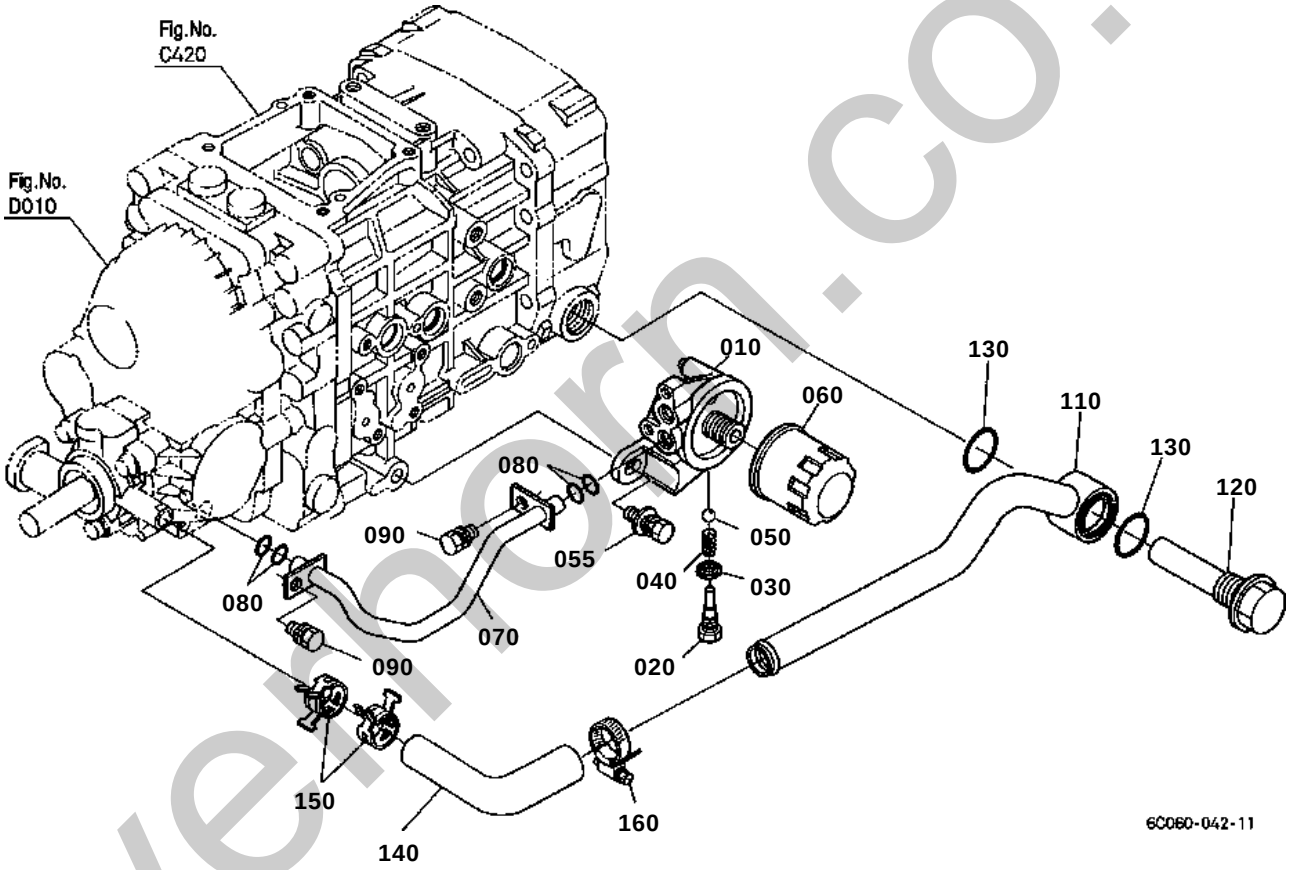

silverthorn.co.uk

HYDRAULIC OIL LINE(HST)

↔ Interchangeable; ≠ not interchangeable; ← new for old; → old for new

REF.No	Part No.	Description	Q'ty	S.No.	I/C	REMARKS	Weight (kgf)	Weight (lb)
010	6C050-39333	BRACKET FILTER	1				0.19	0.418
020	6C050-39382	BOLT	1				0.03	0.066
030	04717-01200	WASHER WITH RUBBER	1				0.002	0.0044
040	16851-36950	SPRING	1				0.02	0.044
050	07715-01605	BALL	1				0.003	0.0066
055	01125-51030	BOLT	1				0.03	0.066
060	66021-36060	CARTRIDGE OIL FILTER	1				0.39	0.858
070	6C150-39340	PIPE	1				0.115	0.253
080	04816-00120	O RING	4				0.001	0.0022
090	01123-60816	BOLT	2				0.01	0.022
100	99999-99999	BLANK	0				0	0
110	6C070-39120	PIPE	1				0.34	0.748
120	66021-36390	FILTER OIL	1				0.185	0.407
130	04811-10300	O RING	2				0.001	0.0022
140	32721-39130	HOSE	1				0.049	0.1078
150	32721-39160	CLAMP HOSE	2				0.005	0.011
160	67955-36230	CLAMP	1				0.023	0.0506

silverhorn.co.uk

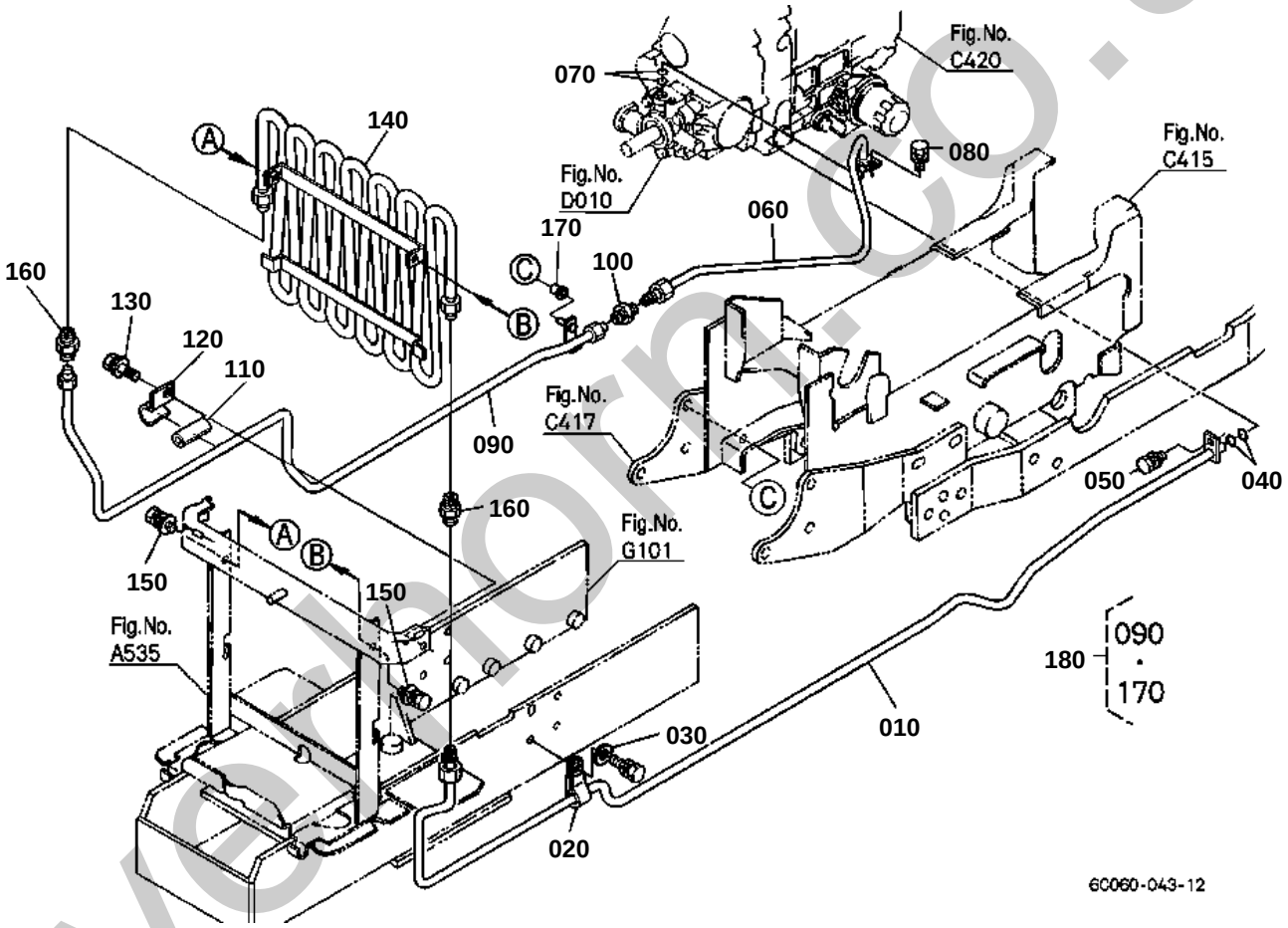

silvermorn.co.uk

OLD PARTS

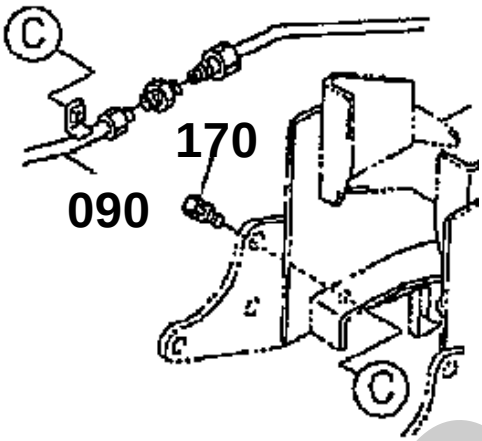

6C060-801-10

silverhorn.co.uk

HYDRAULIC OIL LINE(OIL COOLER)

↔ Interchangeable; ≠ not interchangeable; ← new for old; → old for new

REF.No	Part No.	Description	Q'ty	S.No.	I/C	REMARKS	Weight (kgf)	Weight (lb)
010	6C170-39320	PIPE RETURN	1				0.6	1.32
020	6C050-39410	CLAMP PIPE	1				0.013	0.0286
030	04013-60100	WASHER PLAIN	1				0.003	0.0066
040	04816-00120	O RING	2				0.001	0.0022
050	01123-60816	BOLT	1				0.01	0.022
060	6C150-39350	PIPE	1				0.2	0.44
070	04816-00120	O RING	2				0.001	0.0022
080	01123-60816	BOLT	1				0.01	0.022
090	6C170-39362	PIPE	1	<=54083		NOT SALE ORDER BY REF.No.180	0.45	0.99
090	6C170-39364	PIPE	1	>=54084	1		0.56	1.232
100	06013-51203	JOINT PIPE	1				0.035	0.077
110	6C140-39250	CUSHION	1				0.014	0.0308
120	6C140-39240	CLAMP	1				0.065	0.143
130	01135-51030	BOLT	1				0.03	0.066
140	6C150-58710	PIPE COOLER	1				1.7	3.74
150	01125-50818	BOLT	2				0.015	0.033
160	06013-51203	JOINT PIPE	2				0.035	0.077
170	01123-60816	BOLT	1	<=54083			0.01	0.022
170	3F740-83450	BUSH	1	>=54084	1		0.001	0.0022
180	6C170-93910	ASSY PIPE	1	<=54083		OPTION	0.45	0.99

silverhorn.co.uk

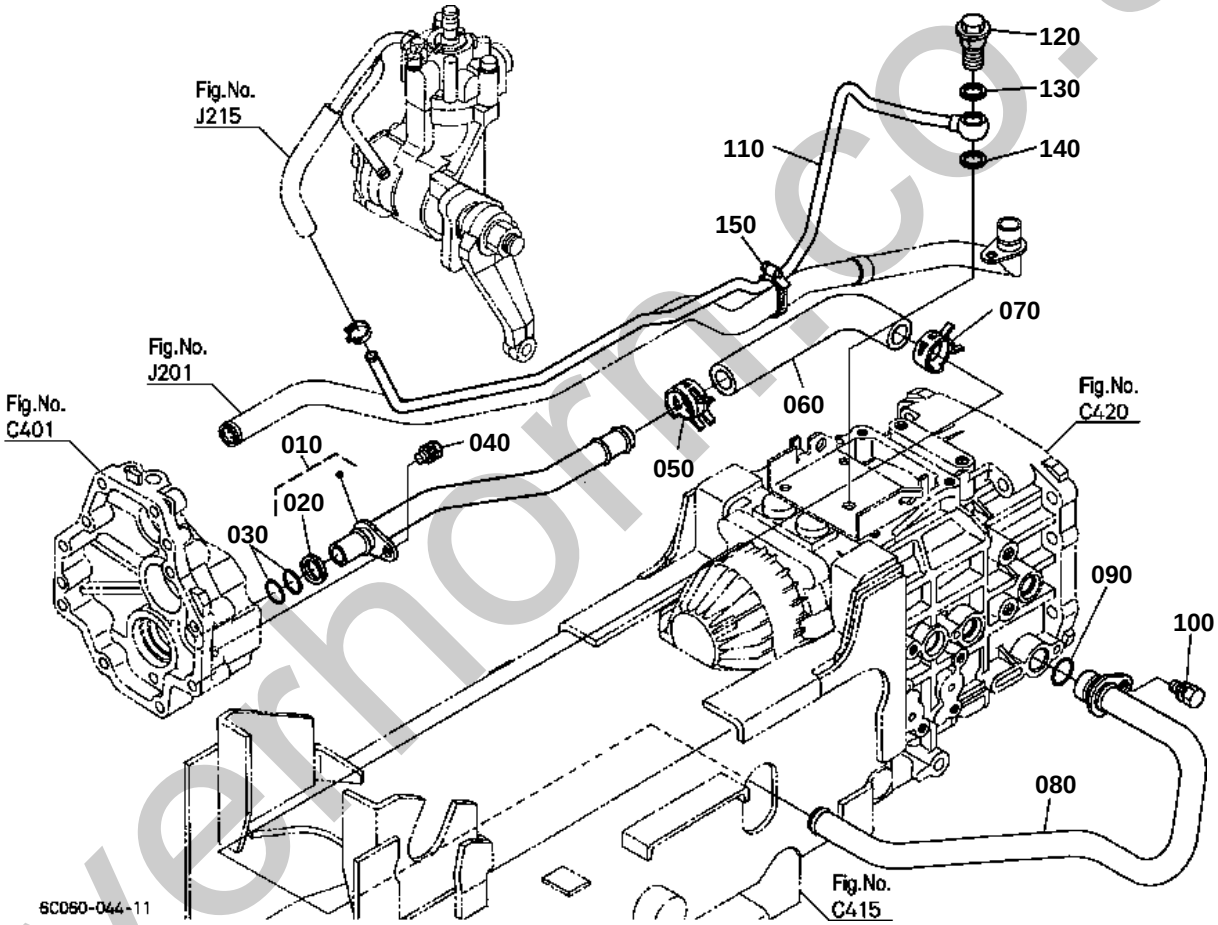

silvershorn.co.uk

HYDRAULIC OIL LINE(F/M)

↔ Interchangeable; ≠ not interchangeable; ← new for old; → old for new

REF.No	Part No.	Description	Q'ty	S.No.	I/C	REMARKS	Weight (kgf)	Weight (lb)
010	6C150-13150	PIPE	1				0.13	0.286
020	6C040-13160	RING	1				0.001	0.0022
030	04816-06170	O RING	2				0.005	0.011
040	01133-51018	BOLT	1				0.018	0.0396
050	09318-88230	CLAMP HOSE	1				0.008	0.0176
060	6C070-13190	HOSE HYDRAULIC	1				0.07	0.154
070	09318-88230	CLAMP HOSE	1				0.008	0.0176
080	6C070-13160	PIPE	1				0.27	0.594
090	04816-00200	O RING	1				0.003	0.0066
100	01123-60816	BOLT	1				0.01	0.022
110	6C150-13172	PIPE	1				0.25	0.55
120	6C070-39290	BOLT JOINT	1				0.05	0.11
130	14102-53620	GASKET	1				0.003	0.0066
140	67111-37180	GASKET	1				0.003	0.0066
150	67955-36230	CLAMP	1				0.023	0.0506

silverhorn.co.uk

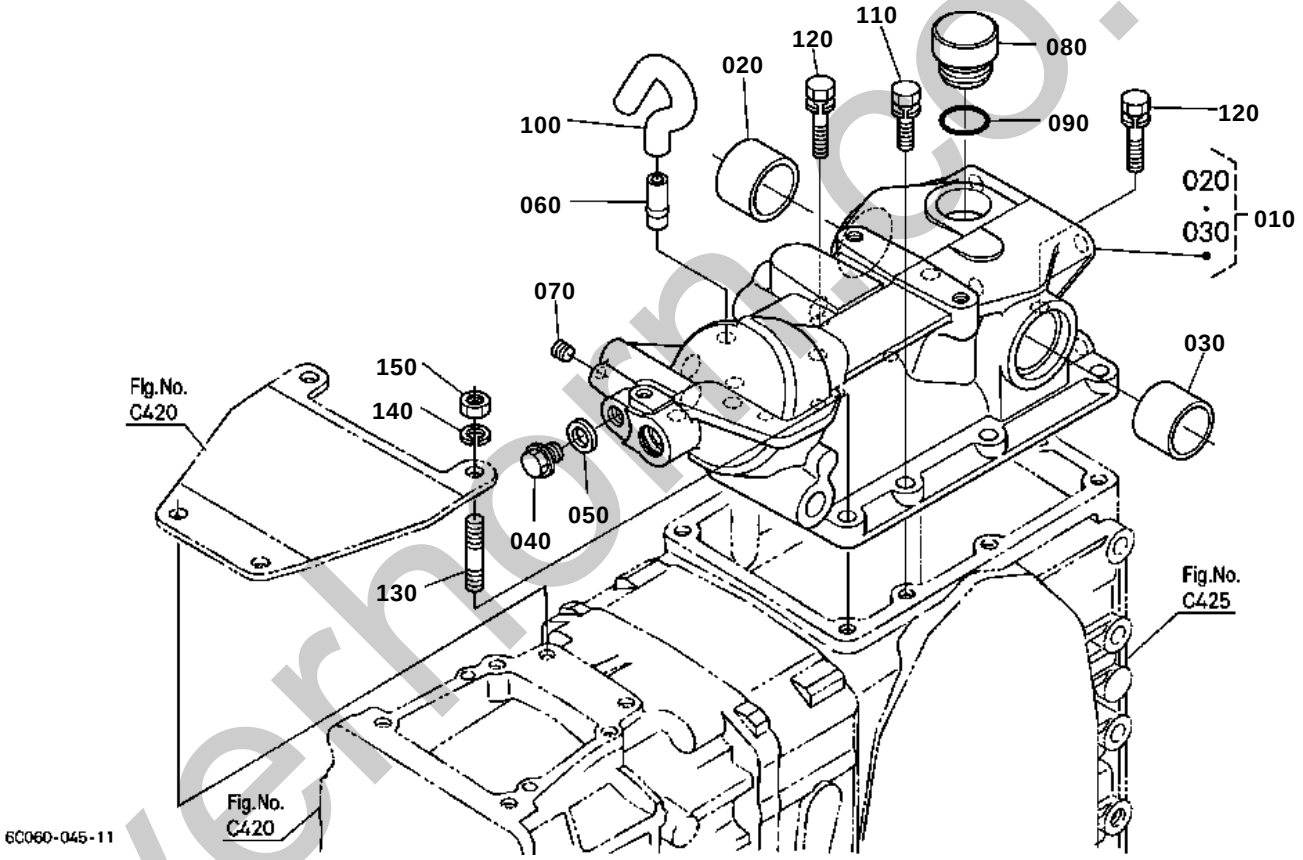

silverhorn.co.uk

HYDRAULIC CYLINDER

↔ Interchangeable; ≠ not interchangeable; ← new for old; → old for new

REF.No	Part No.	Description	Q'ty	S.No.	I/C	REMARKS	Weight (kgf)	Weight (lb)
010	6C060-36032	ASSY CASE CYLINDER	1	<=51929			0	0
010	6C060-36033	ASSY CASE CYLINDER	1	>=51930	¬		11.05	24.31
020	6C040-36480	BUSH	1				0.02	0.044
030	6C040-36490	BUSH	1				0.05	0.11
040	37150-36730	PLUG	1				0.03	0.066
050	37150-36720	GASKET	1				0.01	0.022
060	6C140-36050	JOINT BREATHER	1				0.006	0.0132
070	32701-36150	PLUG	1				0.005	0.011
080	6C040-36110	PLUG OIL FILLER	1				0.02	0.044
090	04816-00240	O RING	1				0.003	0.0066
100	31351-37140	BREATHER	1				0.01	0.022
110	01123-51035	BOLT	5				0.025	0.055
120	01123-51045	BOLT	2				0.032	0.0704
130	01555-51035	STUD	2				0.029	0.0638
140	04512-60100	WASHER SPRING	2				0.002	0.0044
150	02118-50100	NUT	2				0.005	0.011

silverhorn.co.uk

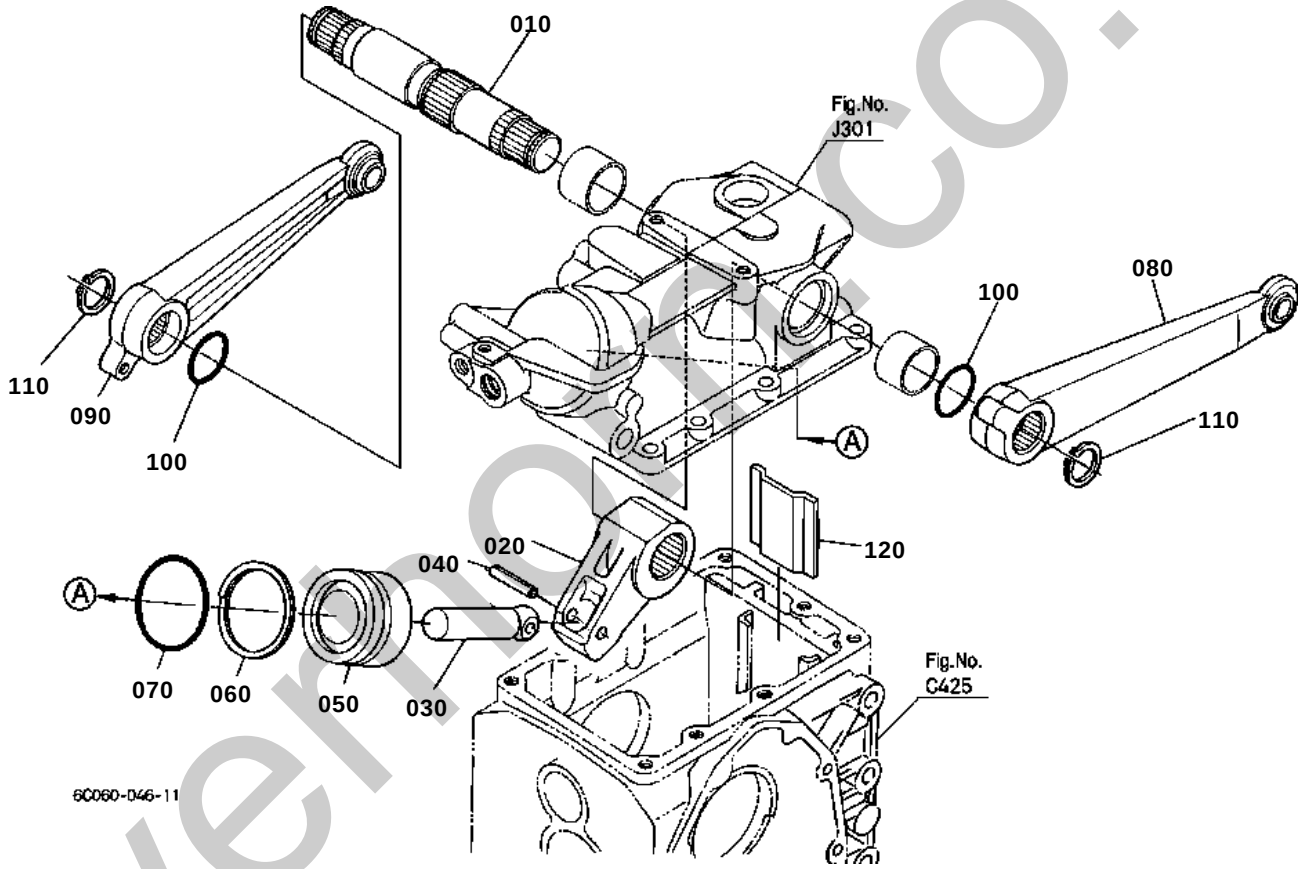

silvermoor.co.uk

HYDRAULIC PISTON/LIFT ARM

↔ Interchangeable; ≠ not interchangeable; ← new for old; → old for new

REF.No	Part No.	Description	Q'ty	S.No.	I/C	REMARKS	Weight (kgf)	Weight (lb)
010	6C070-36470	SHAFT HYD.ARM	1				1.67	3.674
020	6C040-36450	ARM HYDRAULIC	1				0.99	2.178
030	6C040-36430	ROD HYD.PISTON	1				0.36	0.792
040	05411-00640	PIN SPRING	1				0.006	0.0132
050	6C040-36410	PISTON HYD.	1				0.78	1.716
060	6A600-36460	RING BACK UP	1				0.005	0.011
070	04811-00600	O RING	1				0.006	0.0132
080	6C040-36510	ARM LIFT LH	1				1.88	4.136
090	6C040-36524	ARM LIFT RH	1				1.86	4.092
100	6C040-36550	O RING	2				0.003	0.0066
110	04612-00320	CIR CLIP EXTERNAL	2				0.004	0.0088
120	6C040-36750	STOPPER	1				0.222	0.4884

silverhorn.co.uk

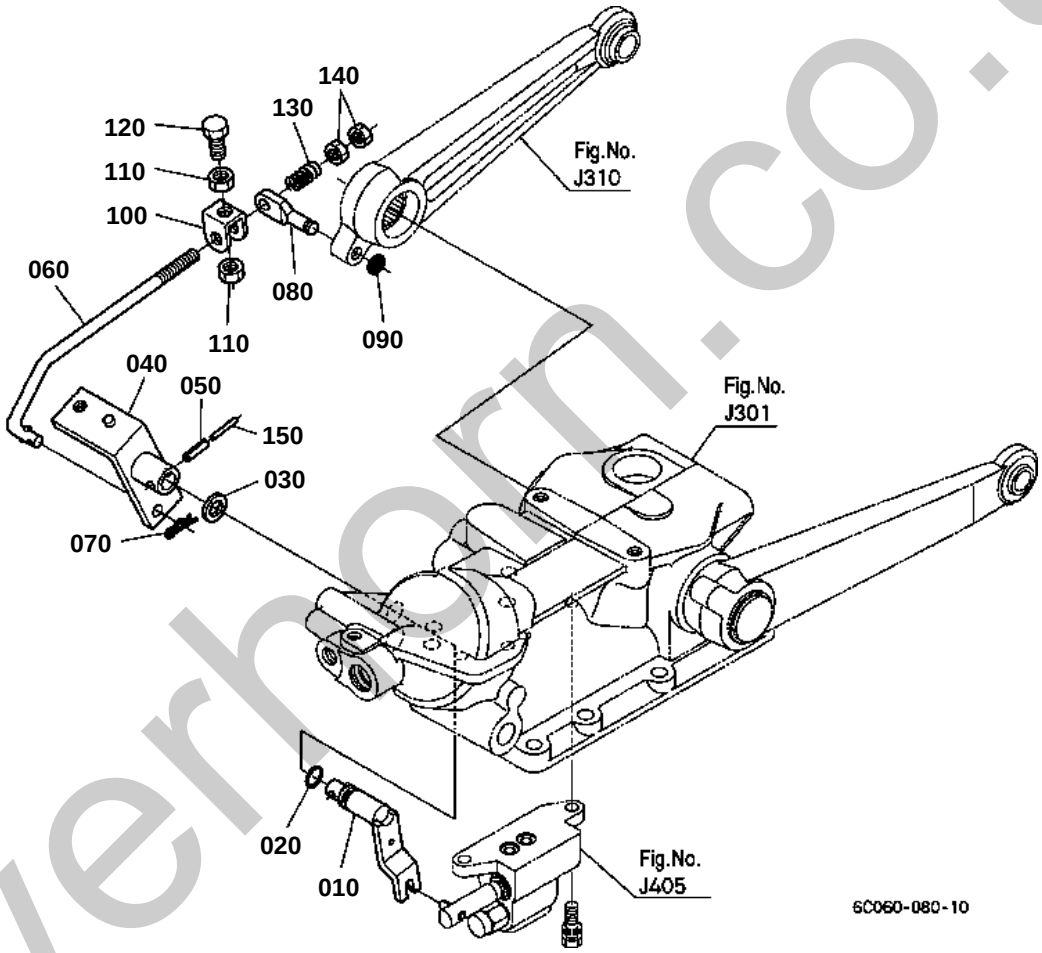

silverhorn.co.uk

OLD PARTS

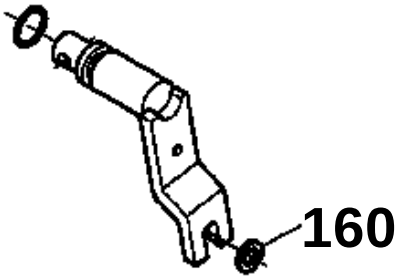

6C060-802-10

silverhorn.co.uk

FEED BACK LEVER

↔ Interchangeable; ≠ not interchangeable; ← new for old; → old for new

REF.No	Part No.	Description	Q'ty	S.No.	I/C	REMARKS	Weight (kgf)	Weight (lb)
010	6C060-36933	SHAFT CONTROL LEVER	1	<=53265			0.096	0.2112
010	6C060-36934	SHAFT CONTROL LEVER	1	>=53266	¬		0.1	0.22
020	04816-00110	O RING	1				0.001	0.0022
030	6C060-36820	COLLAR ARM HYD.	1				0.001	0.0022
040	6C060-36270	ARM CONTROL LEVER	1				0.23	0.506
050	05411-00520	PIN SPRING	1	<=52613			0.002	0.0044
050	05411-00525	PIN SPRING	1	>=52614	¬		0.002	0.0044
060	6C090-36233	ROD FEED BACK	1				0.08	0.176
070	05525-50800	PIN SNAP	1				0.001	0.0022
080	6C090-36220	PIN FEED BACK	1				0.03	0.066
090	04613-50080	CIR CLIP EXTERNAL	1				0.001	0.0022
100	66611-36320	INTERLOCKER	1				0.022	0.0484
110	02112-50080	NUT	2				0.003	0.0066
120	01153-50822	BOLT	1				0.011	0.0242
130	68001-63250	SPRING	1				0.005	0.011
140	6C090-36460	NUT	2				0.006	0.0132
150	05411-00325	PIN SPRING	1	>=54746			0.001	0.0022
160	04013-60060	WASHER PLAIN	1	<=52613			0.001	0.0022

silverhorn.co.uk

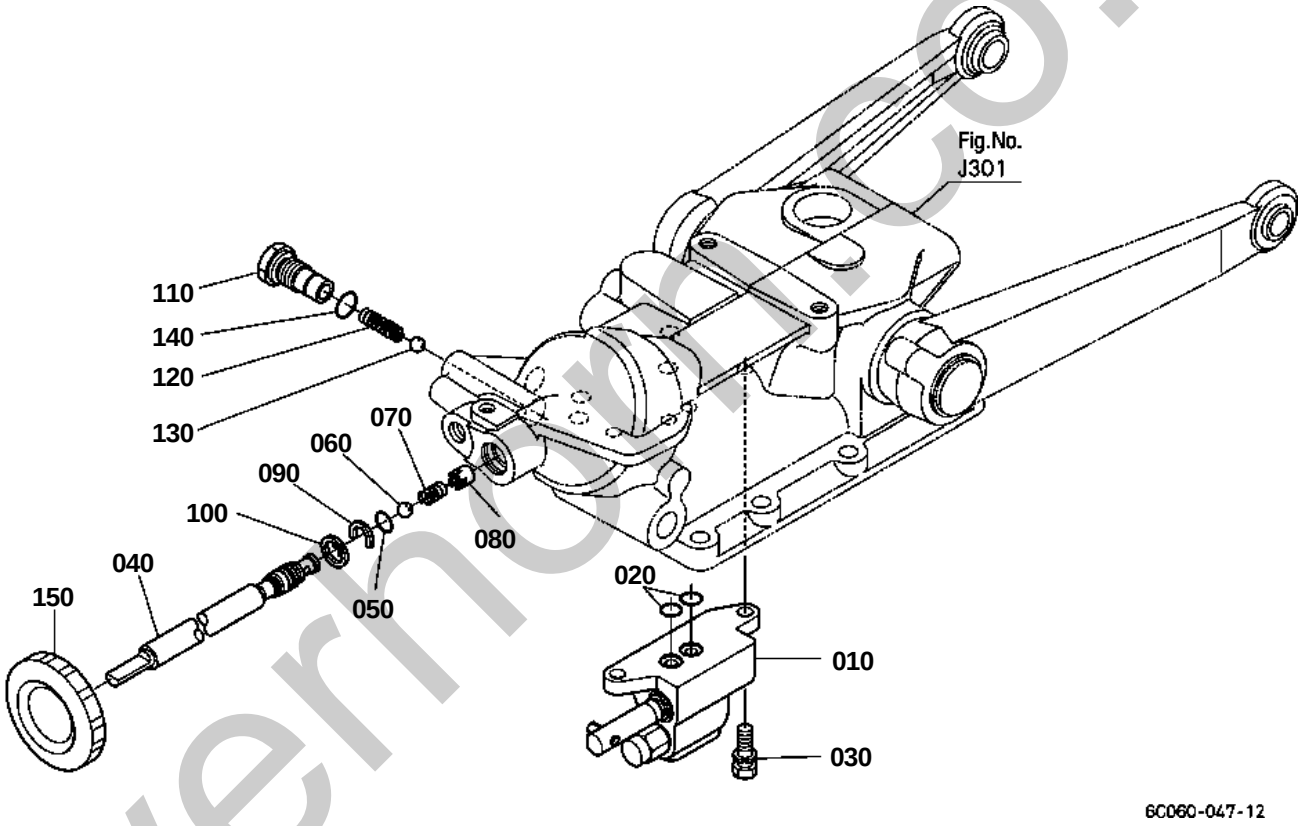

silverhomes.co.uk

CONTROL VALVE

↔ Interchangeable; ≠ not interchangeable; ← new for old; → old for new

REF.No	Part No.	Description	Q'ty	S.No.	I/C	REMARKS	Weight (kgf)	Weight (lb)
010	YW176-00100	ASSY VALVE CONTROL	1				0.9	1.98
020	04817-00100	O RING	2				0.001	0.0022
030	01123-50825	BOLT	2				0.013	0.0286
040	6A600-36280	SHAFT HYD.ADJUST	1				0.23	0.506
050	04817-00100	O RING	1				0.001	0.0022
060	07715-03209	BALL	1				0.002	0.0044
070	6A600-93650	SPRING	1				0.001	0.0022
080	6A600-36270	COLLAR	1				0.002	0.0044
090	6A320-37410	STOPPER	1				0.002	0.0044
100	04611-00190	CIR CLIP INTERNAL	1				0.001	0.0022
110	6C090-36060	PLUG	1				0.045	0.099
120	K3511-36080	SPRING	1				0.005	0.011
130	07715-01605	BALL	1				0.003	0.0066
140	04816-00140	O RING	1				0.002	0.0044
150	37410-36643	GRIP	1				0.03	0.066

silverhorn.co.uk

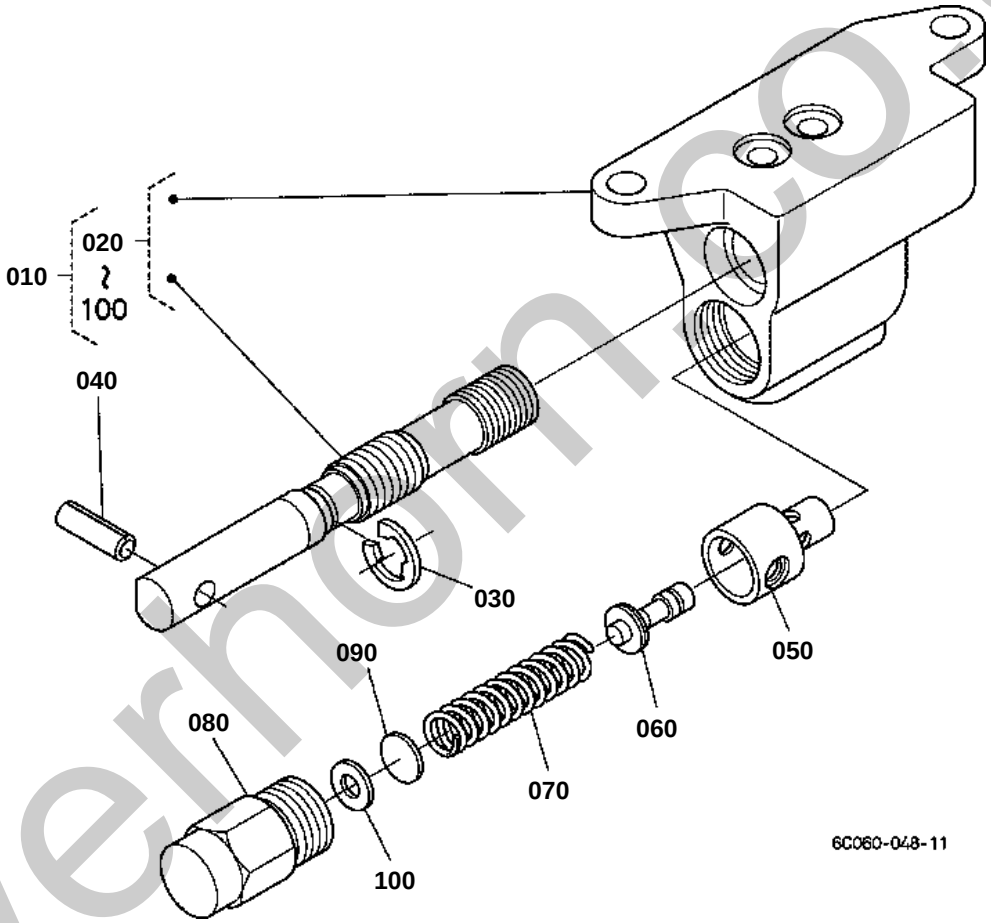

silverhorn.co.uk

↔ Interchangeable; ≠ not interchangeable; ← new for old; → old for new

REF.No	Part No.	Description	Q'ty	S.No.	I/C	REMARKS	Weight (kgf)	Weight (lb)
010	YW176-00100	ASSY VALVE CONTROL	1				0.9	1.98
020	YW176-50100	ASSY BODY-SPOOL	1				0.79	1.738
030	04613-50090	CIR CLIP EXTERNAL	1				0.001	0.0022
040	05411-00620	PIN SPRING	1				0.002	0.0044
050	31351-37930	SEAT RELIEF VALVE	1				0.02	0.044
060	31351-37940	POPPET	1				0.005	0.011
070	31351-37920	SPRING RELIEF	1				0.02	0.044
080	YW176-00310	PLUG	1				0.05	0.11
090	31351-37970	SHIM	2			0.1mm	0.001	0.0022
090	31351-37960	SHIM	2			0.2mm	0.001	0.0022
090	31351-37950	SHIM	2			0.4mm	0.001	0.0022
100	04013-60050	WASHER PLAIN	2				0.001	0.0022

silverhorn.co.uk

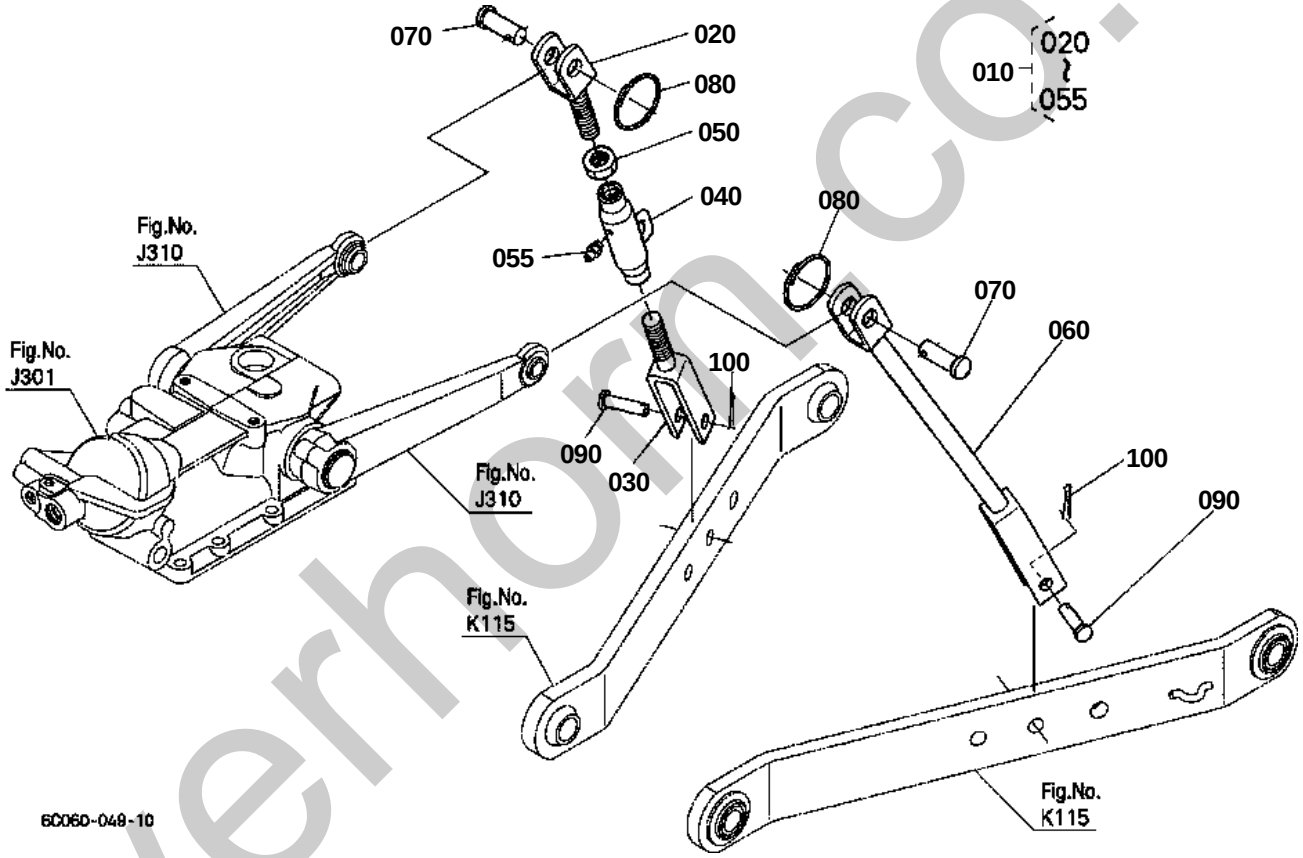

silverhorn.co.uk

3-POINT LINKAGE 2(LIFT ROD)

↔ Interchangeable; ≠ not interchangeable; ← new for old; → old for new

REF.No	Part No.	Description	Q'ty	S.No.	I/C	REMARKS	Weight (kgf)	Weight (lb)
010	6C070-65200	ASSY ROD LIFT RH	1				1.56	3.432
020	6C040-65230	ROD LIFT UPPER RH	1				0.36	0.792
030	6C070-65240	ROD LIFT LOWER RH	1				0.73	1.606
040	6C070-65250	ROD LIFT MIDDLE	1				0.45	0.99
050	02172-50180	NUT	1				0.021	0.0462
055	06613-10675	NIPPLE GREASE	1				0.003	0.0066
060	6C070-65270	ROD LIFT LH	1				1.33	2.926
070	05122-51645	PIN JOINT	2				0.075	0.165
080	67156-34340	RING SNAP	2				0.01	0.022
090	05122-51250	PIN JOINT	2				0.05	0.11
100	05511-50425	PIN SPLIT	2				0.003	0.0066

silverhorn.co.uk

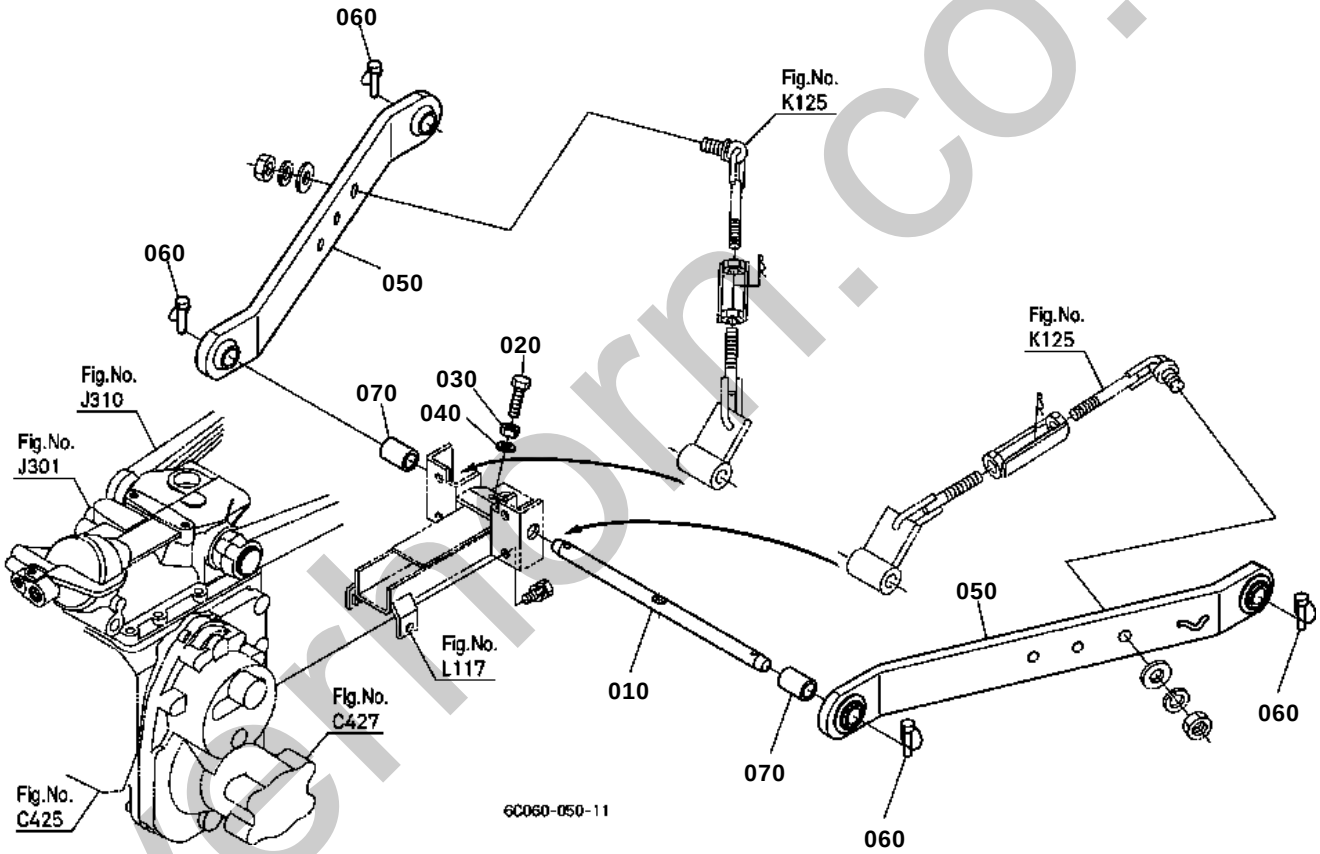

silverthorn.co.uk

LOWER LINK

↔ Interchangeable; ≠ not interchangeable; ← new for old; → old for new

REF.No	Part No.	Description	Q'ty	S.No.	I/C	REMARKS	Weight (kgf)	Weight (lb)
010	6C040-66010	PIN LOWER LINK	1				1.14	2.508
020	6C040-65120	BOLT	1				0.02	0.044
030	02018-50100	NUT	1				0.011	0.0242
040	04512-60100	WASHER SPRING	1				0.002	0.0044
050	6C040-65210	COMP.LINK LOWER	2				5.28	11.616
060	34150-37640	PIN SET	4				0.06	0.132
070	66204-65350	SPACER	2				0.12	0.264

silverhorn.co.uk

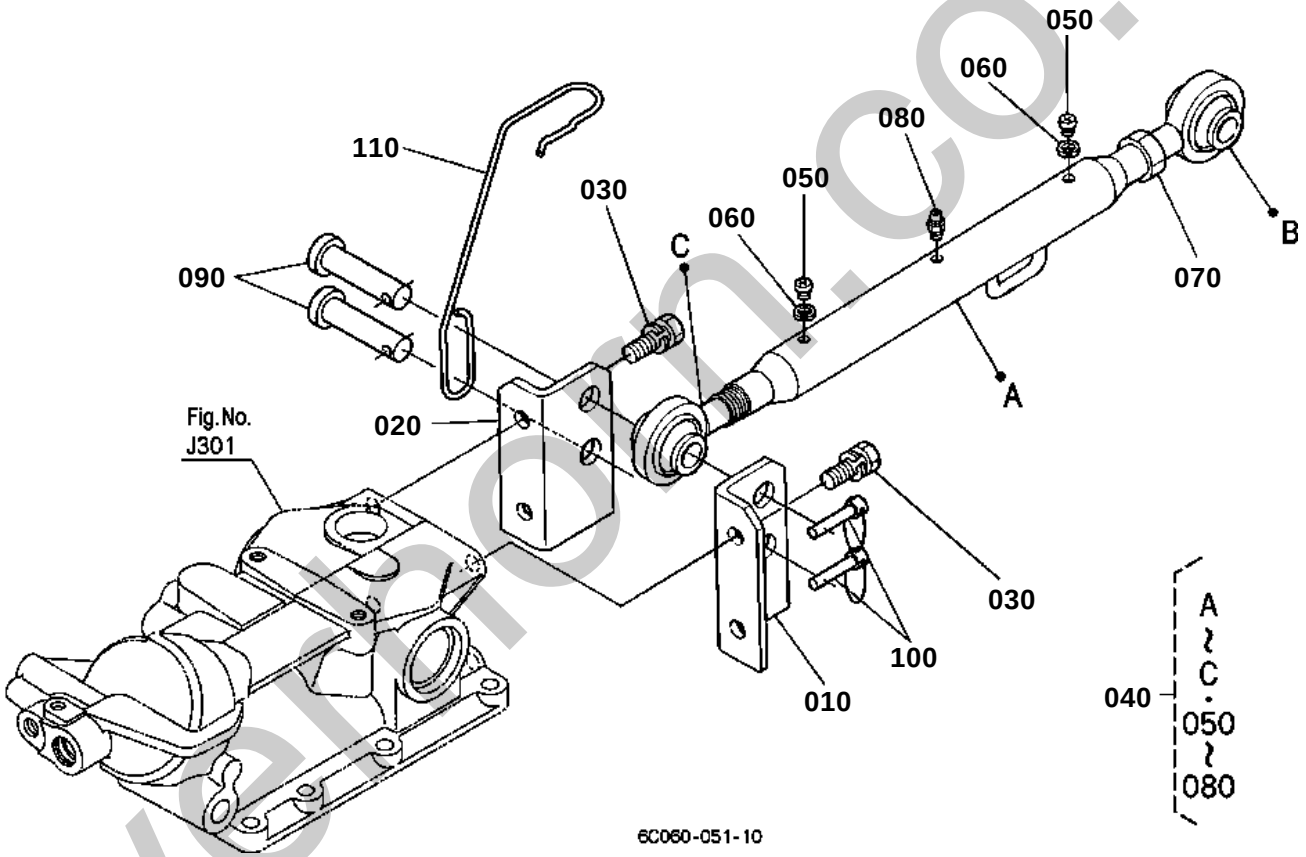

silvermoon.co.uk

3-POINT LINKAGE 1(TOP LINK)

↔ Interchangeable; ≠ not interchangeable; ← new for old; → old for new

REF.No	Part No.	Description	Q'ty	S.No.	I/C	REMARKS	Weight (kgf)	Weight (lb)
010	6C040-65190	BRACKET TOP LINK LH	1				0.65	1.43
020	6C040-65160	BRACKET TOP LINK RH	1				0.65	1.43
030	01123-51230	BOLT	4				0.04	0.088
040	6C070-65400	ASSY LINK TOP	1				2.12	4.664
050	03014-50606	SCREW PAN-HEAD	2				0.027	0.0594
060	04512-60060	WASHER SPRING	2				0.001	0.0022
070	02152-50200	NUT	1				0.032	0.0704
080	06613-10675	NIPPLE GREASE	1				0.003	0.0066
090	31150-71360	PIN JOINT	2				0.166	0.3652
100	34150-37640	PIN SET	2				0.06	0.132
110	6C060-65450	HOLDER TOP LINK	1				0.1	0.22

silverhorn.co.uk

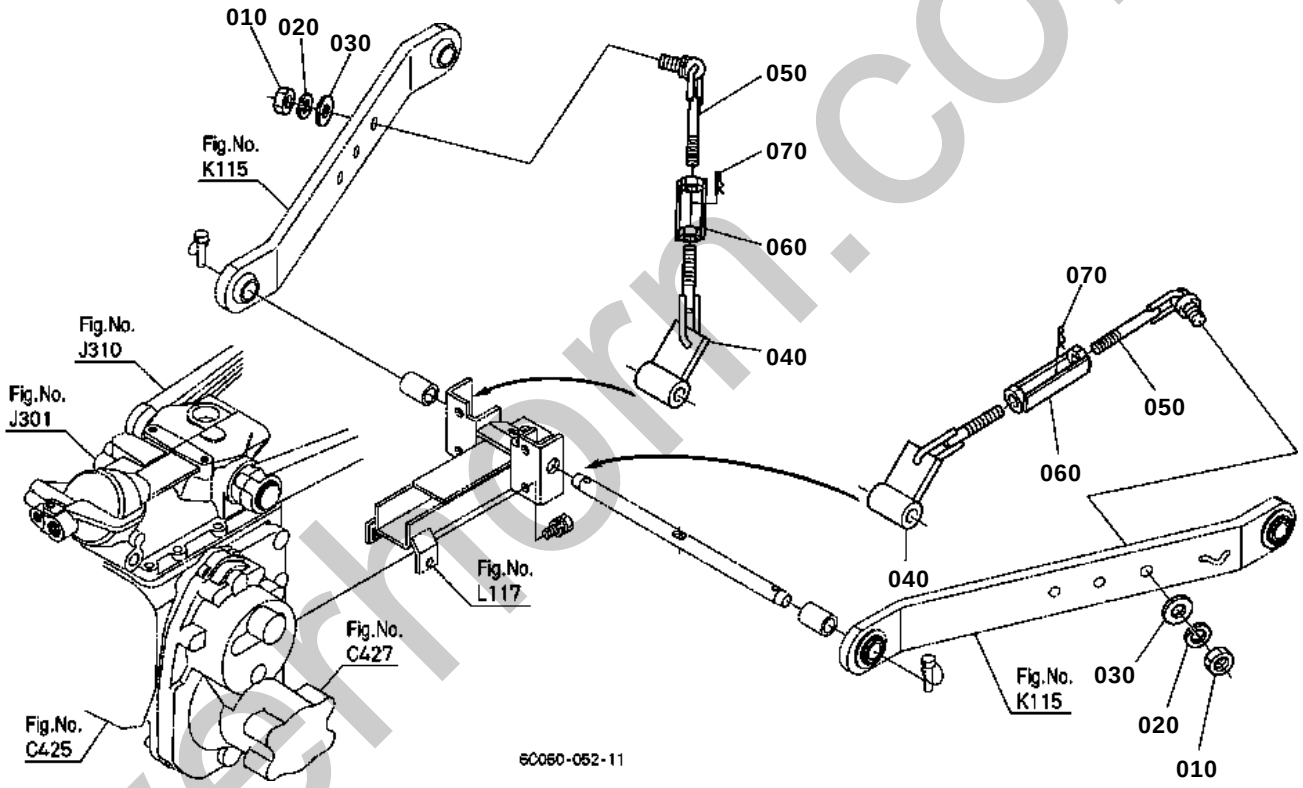

silverthorn.co.uk

CHECK CHAIN

↔ Interchangeable; ≠ not interchangeable; ← new for old; → old for new

REF.No	Part No.	Description	Q'ty	S.No.	I/C	REMARKS	Weight (kgf)	Weight (lb)
010	02174-50160	NUT	2				0.022	0.0484
020	04512-60160	WASHER SPRING	2				0.01	0.022
030	04015-60160	WASHER PLAIN	2				0.058	0.1276
040	6C040-65294	BRACKET CHECK CHAIN	2				0.54	1.188
050	6C040-65323	BOLT TURNBUCKLE	2				0.35	0.77
060	6C040-65390	TURNBUCKLE	2				0.2	0.44
070	05515-61200	PIN SNAP	2				0.005	0.011

silverhorn.co.uk

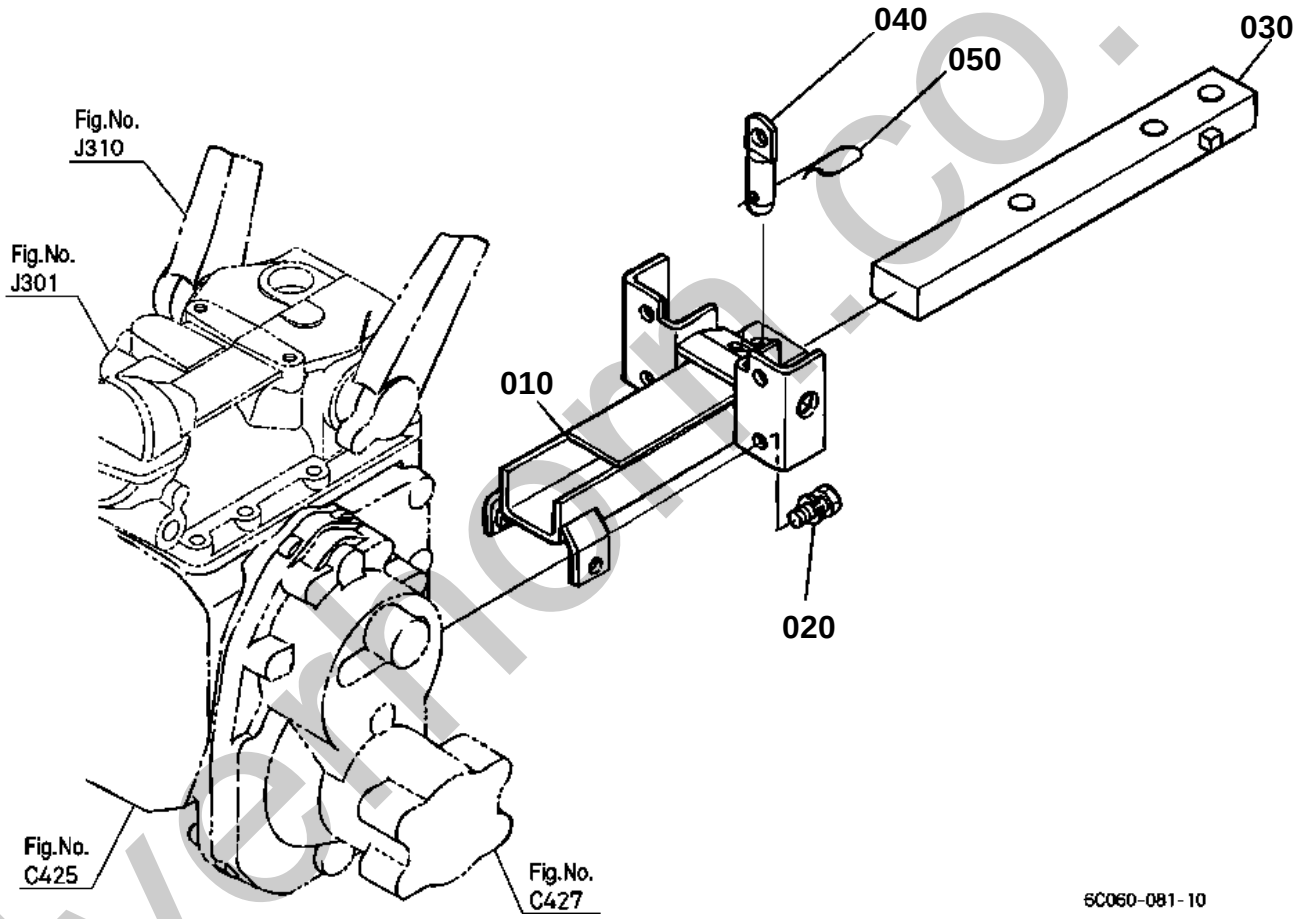

silvermorn.co.uk

↔ Interchangeable; ≠ not interchangeable; ← new for old; → old for new

REF.No	Part No.	Description	Q'ty	S.No.	I/C	REMARKS	Weight (kgf)	Weight (lb)
010	6C040-65604	COMP.HITCH	1				3.35	7.37
020	01123-51230	BOLT	4				0.04	0.088
030	6C040-67110	DRAWBAR	1				4.56	10.032
040	6C040-65610	PIN HITCH	1				0.18	0.396
050	31150-29730	PIN SPRING	1				0.044	0.0968

silverhorn.co.uk

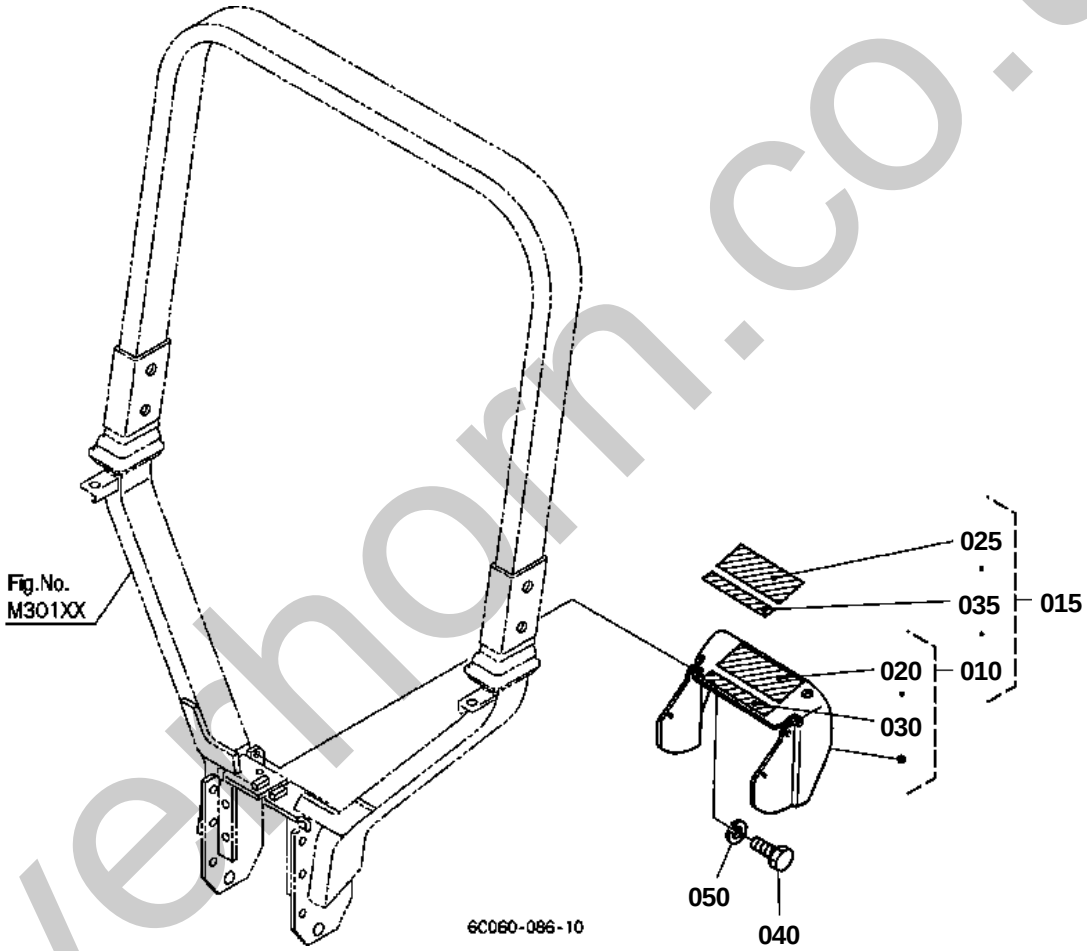

silverhorn.co.uk

PTO PROTECTOR

↔ Interchangeable; ≠ not interchangeable; ← new for old; → old for new

REF.No	Part No.	Description	Q'ty	S.No.	I/C	REMARKS	Weight (kgf)	Weight (lb)
010	6C140-72100	KIT COVER PTO (A)	1			ENGLISH	1.36	2.992
015	6C140-72000	KIT COVER PTO (B)	1			FRENCH	1.38	3.036
020	TA040-49590	LABEL PTO WARNING	1			ENGLISH	0	0
025	TA041-49590	LABEL PTO WARNING	1			FRENCH	0.001	0.0022
030	6C140-47440	LABEL DRAWBAR	1			ENGLISH	0.001	0.0022
035	6C141-47440	LABEL DRAWBAR	1			FRENCH	0.001	0.0022
040	01153-50820	BOLT	2				0.012	0.0264
050	04512-60080	WASHER SPRING	2				0.002	0.0044

silverhorn.co.uk

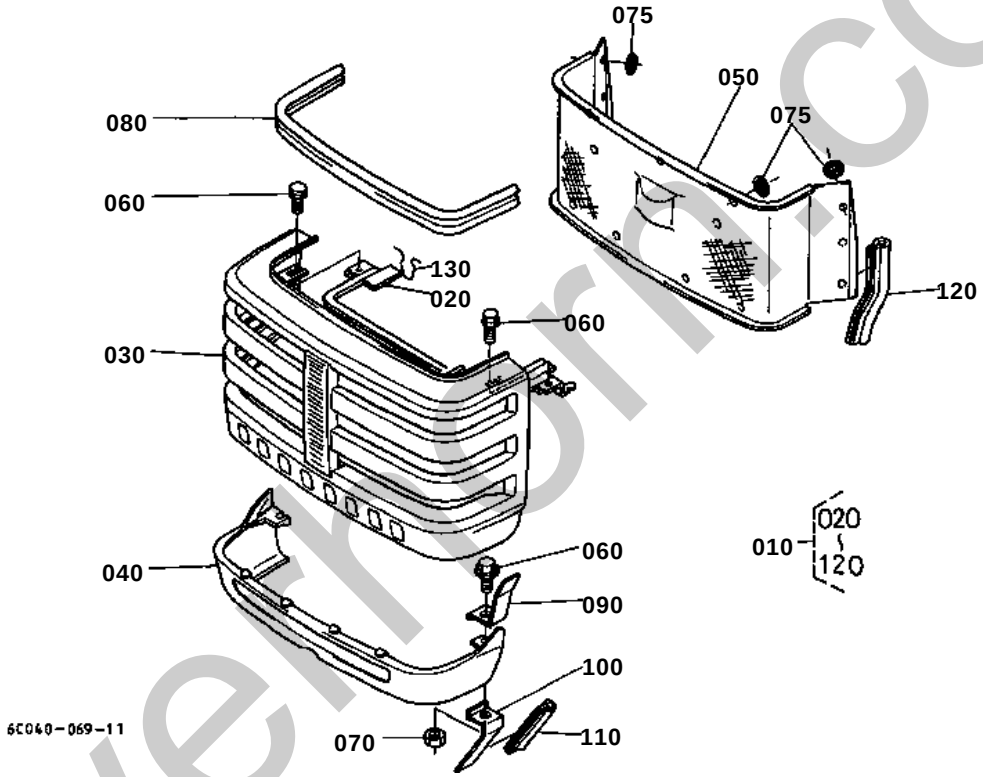

silverthorn.co.uk

FRONT GRILLE

↔ Interchangeable; ≠ not interchangeable; ← new for old; → old for new

REF.No	Part No.	Description	Q'ty	S.No.	I/C	REMARKS	Weight (kgf)	Weight (lb)
010	6C070-54402	COMP.COVER FRONT	1				1.67	3.674
020	6C040-54533	COMP.PLATE	1				0.38	0.836
030	6C070-54410	COVER FRONT	1				0.93	2.046
040	6C040-54423	COVER FRONT	1				0.159	0.3498
050	6C040-54434	NET	1				0.25	0.55
060	01754-50820	BOLT FLANGE	4				0.015	0.033
070	02054-50080	NUT	2				0.005	0.011
075	6C040-54540	NUT	15				0.001	0.0022
080	6C042-54140	SPONGE	1				0.02	0.044
090	6C040-54910	STAY	2				0.012	0.0264
100	6C040-54920	STAY	2				0.014	0.0308
110	76611-53160	TRIM SHUTTER PLATE	2				0.02	0.044
120	67980-51510	TRIM	2				0.025	0.055
130	6C040-54364	SPRING	2				0.004	0.0088

silverhorn.co.uk

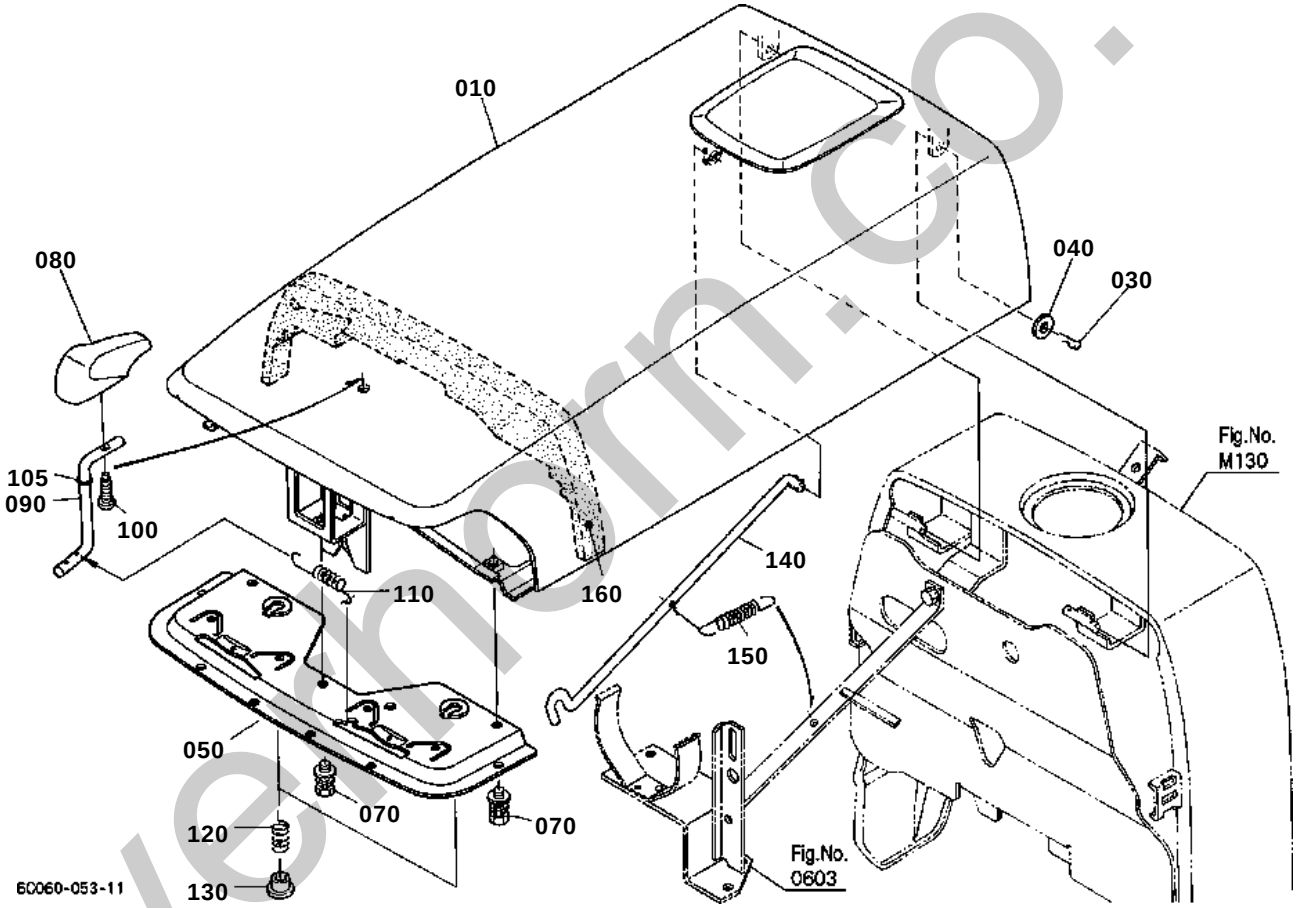

silvermorn.co.uk

BONNET

↔ Interchangeable; ≠ not interchangeable; ← new for old; → old for new

REF.No	Part No.	Description	Q'ty	S.No.	I/C	REMARKS	Weight (kgf)	Weight (lb)
010	6C070-54105	COMP.BONNET	1				7.5	16.5
020	99999-99999	BLANK	0				0	0
030	05525-50800	PIN SNAP	1				0.001	0.0022
040	04013-60080	WASHER PLAIN	1				0.002	0.0044
050	6A100-54180	COVER BONNET	1				0.45	0.99
060	99999-99999	BLANK	0				0	0
070	01125-60816	BOLT	3				0.01	0.022
080	6C040-54260	HANDLE MASCOT	1				0.028	0.0616
090	6C090-54270	LEVER HANDLE	1				0.09	0.198
100	03614-50416	SCREW TAPPING	1				0.002	0.0044
105	04811-10080	O RING	1				0.001	0.0022
110	6C040-54150	SPRING	1				0.006	0.0132
120	6C040-54163	SPRING	2				0.022	0.0484
130	41182-61150	PLUG	2				0.003	0.0066
140	6A100-54510	ROD BONNET	1				0.159	0.3498
150	56811-31430	SPRING	1				0.018	0.0396
160	6C170-54460	SPONGE BONNET	1				0.04	0.088

silverhorn.co.uk

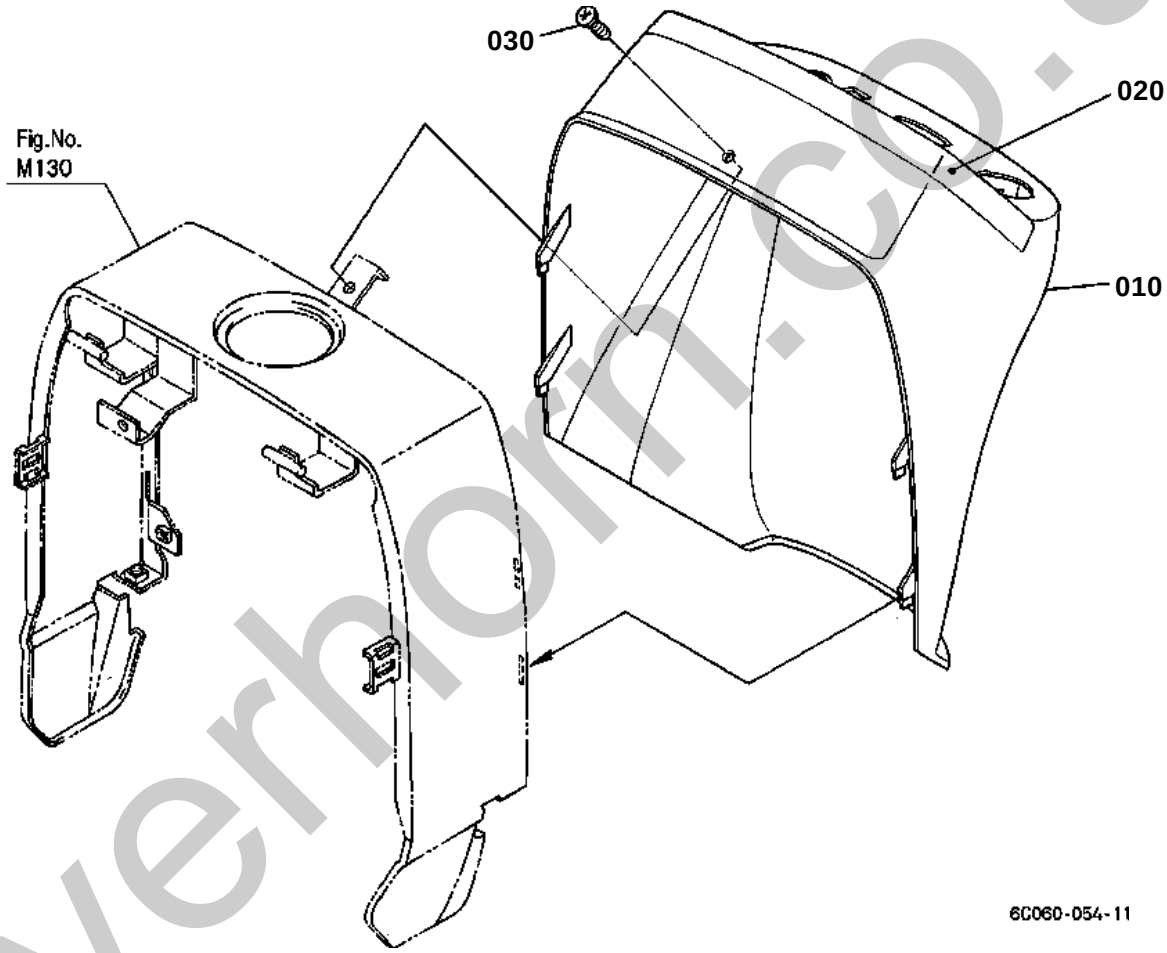

silverhorn.co.uk

PANEL COVER

↔ Interchangeable; ≠ not interchangeable; ← new for old; → old for new

REF.No	Part No.	Description	Q'ty	S.No.	I/C	REMARKS	Weight (kgf)	Weight (lb)
010	6C140-53510	COVER PANEL	1				4.25	9.35
020	6C140-53520	COVER FRAME	1				0.13	0.286
030	37410-61720	SCREW	1				0.001	0.0022

silverhorn.co.uk

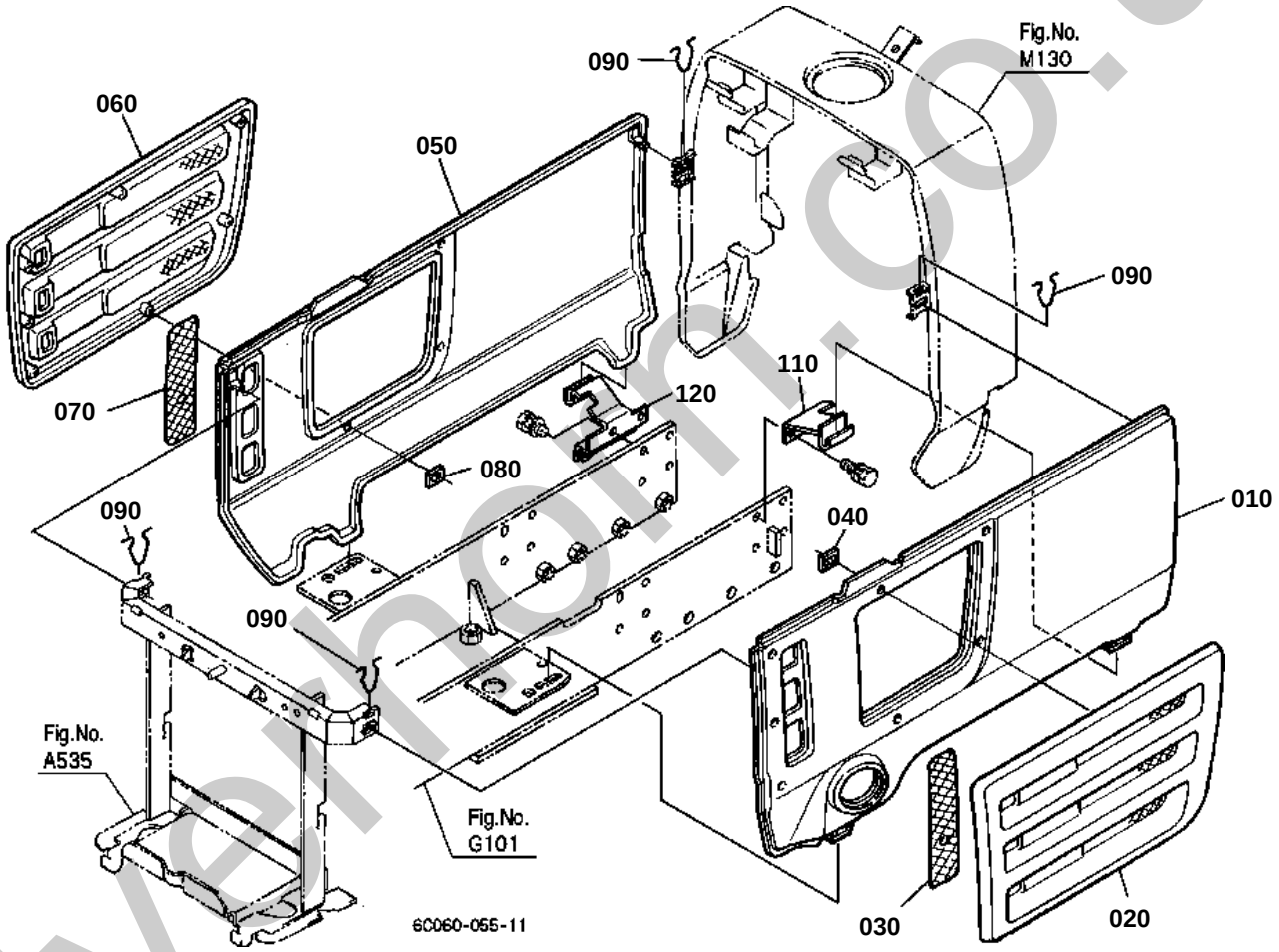

silverhorn.co.uk

SIDE COVER

↔ Interchangeable; ≠ not interchangeable; ← new for old; → old for new

REF.No	Part No.	Description	Q'ty	S.No.	I/C	REMARKS	Weight (kgf)	Weight (lb)
010	6C040-54324	COVER SIDE LH	1				1.47	3.234
020	6C070-54330	COVER	1				0.23	0.506
030	6C040-54390	NET	1				0.01	0.022
040	55611-44190	NUT	7				0.004	0.0088
050	6C040-54355	COVER SIDE RH	1				1.48	3.256
060	6C070-54380	COVER	1				1.8	3.96
070	6C040-54390	NET	1				0.01	0.022
080	55611-44190	NUT	7				0.004	0.0088
090	6C040-54364	SPRING	4				0.004	0.0088
100	99999-99999	BLANK	0				0	0
110	6C070-51240	BRACKET COVER LH	1				0.2	0.44
120	6C070-51250	BRACKET COVER RH	1				0.28	0.616

silverhorn.co.uk

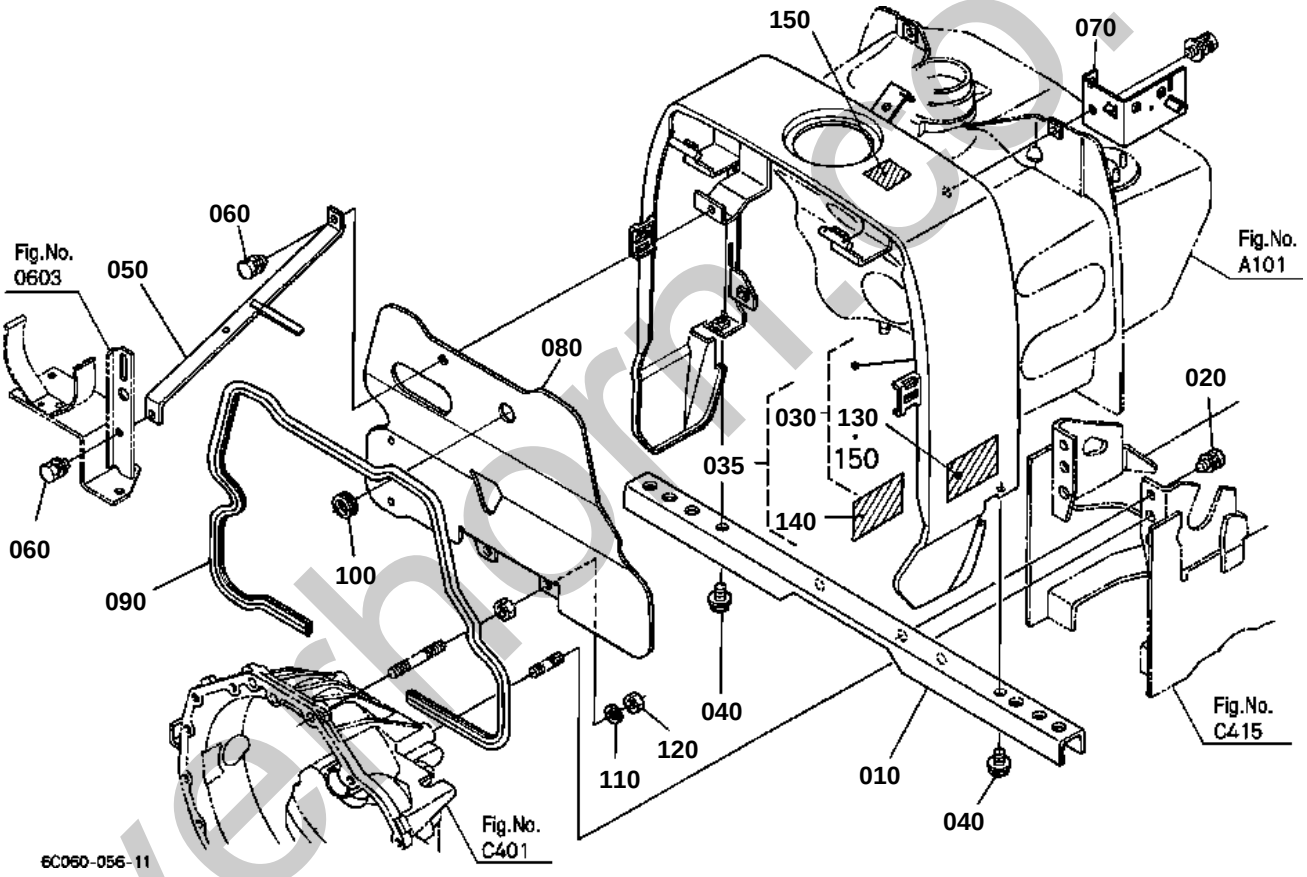

silverhorn.co.uk

OLD PARTS

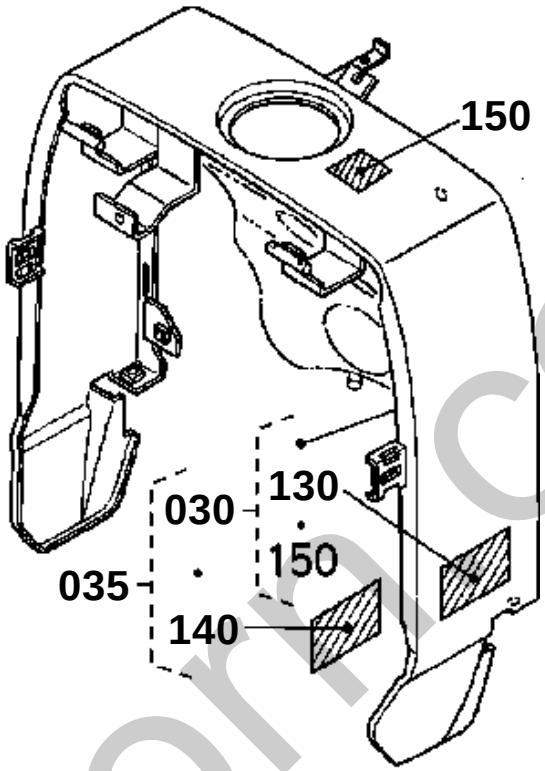

6C060-805-10

silverhorn.co.uk

SHUTTER PLATE

↔ Interchangeable; ≠ not interchangeable; ← new for old; → old for new

REF.No	Part No.	Description	Q'ty	S.No.	I/C	REMARKS	Weight (kgf)	Weight (lb)
010	6C040-54213	PILLAR CENTER	1				1.4	3.08
020	01133-51022	BOLT	2				0.025	0.055
030	6C060-99250	KIT A PILLAR CENTER	1	<=57577		ENGLISH	5.8	12.76
030	6C070-99253	KIT A PILLAR CENTER	1	>=57578	1	ENGLISH	6.5	14.3
035	6C060-99200	KIT B PILLAR CENTER	1	<=57577		FRENCH	5.5	12.1
035	6C070-99203	KIT B PILLAR CENTER	1	>=57578	1	FRENCH	6.5	14.3
040	6C040-54610	BOLT	2				0.014	0.0308
050	6C070-54230	STAY PILLAR	1				0.23	0.506
060	01023-50616	BOLT	2				0.005	0.011
070	6A370-54280	BRACKET	1				0.11	0.242
080	6C070-54550	PLATE SHUTTER	1				1.16	2.552
090	6C040-54560	TRIM	1				0.2	0.44
100	54721-38340	GROMMET	1				0.003	0.0066
110	04512-60100	WASHER SPRING	2				0.002	0.0044
120	02116-50100	NUT	2				0.004	0.0088
130	6C090-49650	LABEL START CAUTION	1			ENGLISH	0.005	0.011
140	6C091-49650	LABEL START CAUTION	1			FRENCH	0.01	0.022
150	6C040-47412	LABEL FILLER CAUTION	1				0.001	0.0022

silverhorn.co.uk

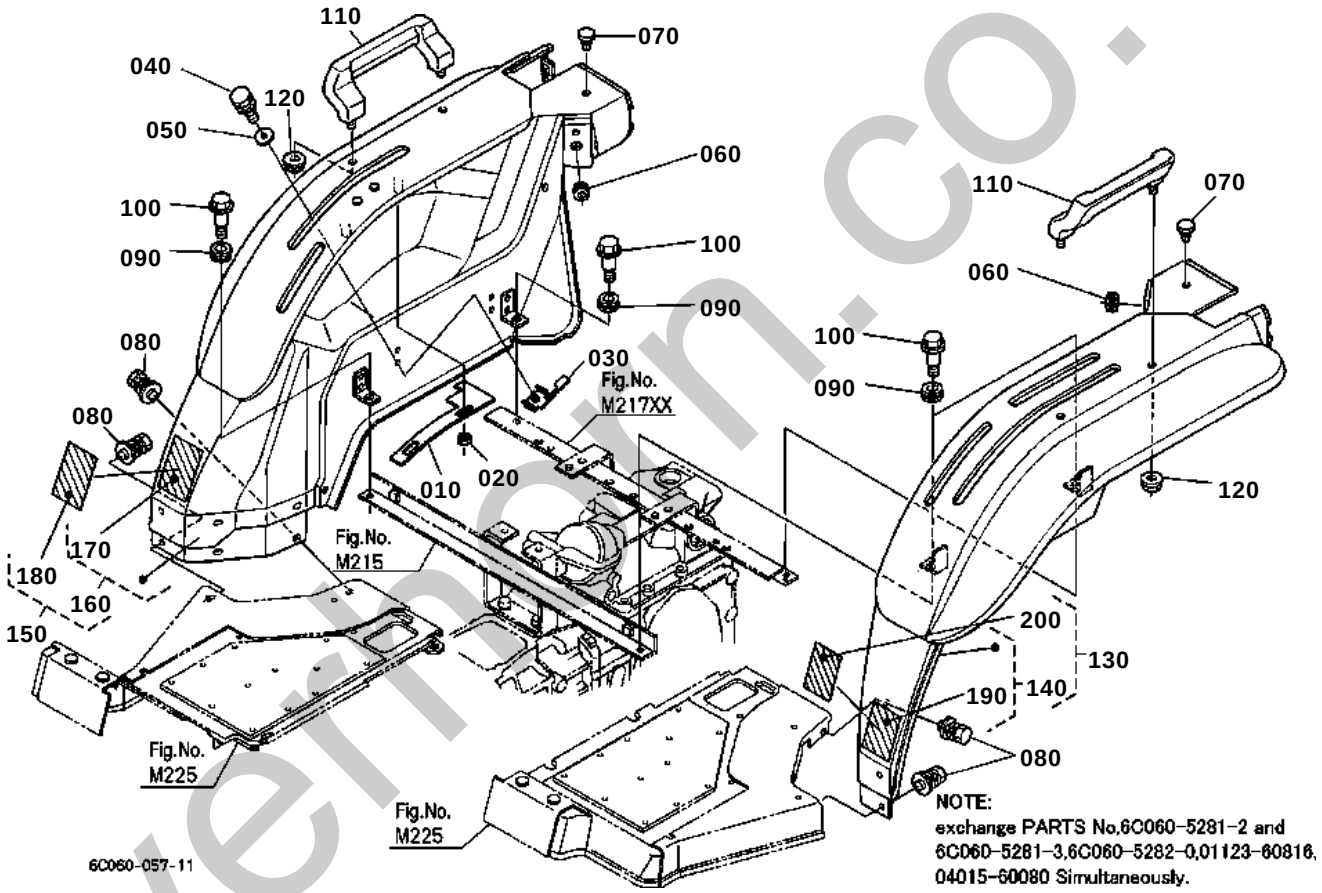

silverthorn.co.uk

OLD PARTS

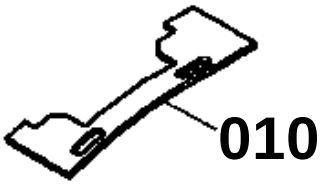

6C060-803-10

silverhorn.co.uk

FENDER

↔ Interchangeable; ≠ not interchangeable; ← new for old; → old for new

REF.No	Part No.	Description	Q'ty	S.No.	I/C	REMARKS	Weight (kgf)	Weight (lb)
010	6C060-52812	GUIDE	1	<=57577		SEE NOTE	0.13	0.286
010	6C060-52813	GUIDE HYD.UP	1	>=57578	1	SEE NOTE	0.13	0.286
020	02121-50080	NUT	2				0.01	0.022
030	6C060-52820	GUIDE HYD.DOWN	1	>=57578		SEE NOTE	0.03	0.066
040	01123-60816	BOLT	1	>=57578		SEE NOTE	0.01	0.022
050	04015-60080	WASHER PLAIN	1	>=57578		SEE NOTE	0.01	0.022
060	32150-29180	CAP RUBBER	2				0.002	0.0044
070	38240-29570	PLUG	2				0.001	0.0022
080	01125-50818	BOLT	6				0.015	0.033
090	6A100-51380	CUSHION	4				0.003	0.0066
100	6C040-51342	BOLT	4				0.017	0.0374
110	6C070-52170	HANDRAIL	2				0.25	0.55
120	02131-50100	NUT	4				0.01	0.022
130	6C070-99102	KIT FENDER LH (B)	1			FRENCH	8	17.6
140	6C070-99132	KIT FENDER LH (A)	1			ENGLISH	7.5	16.5
150	6C060-99160	KIT FENDER RH (B)	1			FRENCH	8	17.6
160	6C060-99140	KIT FENDER RH (A)	1			ENGLISH	8	17.6
170	TA040-49320	LABEL ROPS WARNING	1			ENGLISH	0.001	0.0022
180	TA040-49150	LABEL ROPS WARNING	1			FRENCH	0.003	0.0066
190	6C070-47422	LABEL SAFETY	1			ENGLISH	0.005	0.011
200	6C071-47422	LABEL SAFETY	1			FRENCH	0.005	0.011

silverhorn.co.uk

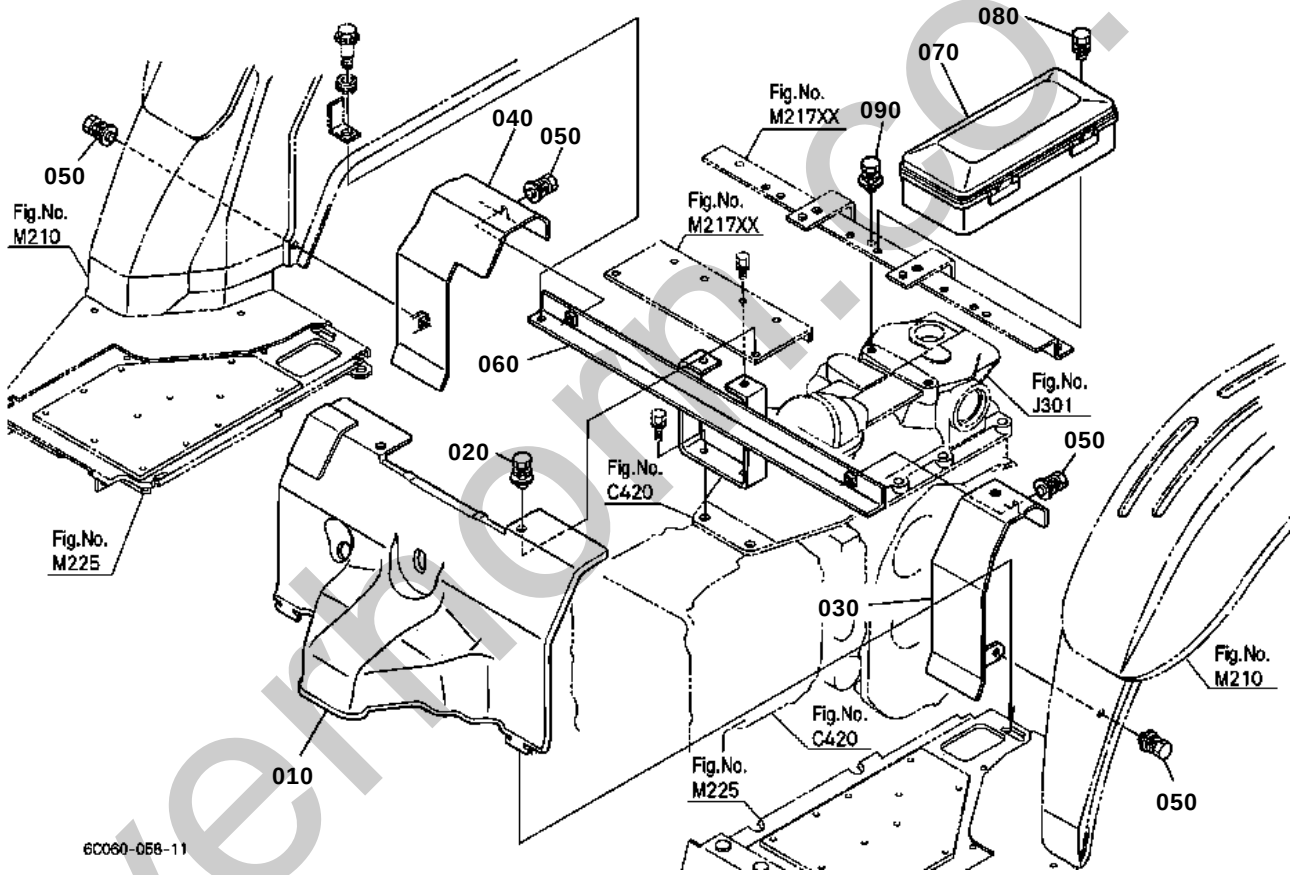

silverthorn.co.uk

FLOOR SEAT

↔ Interchangeable; ≠ not interchangeable; ← new for old; → old for new

REF.No	Part No.	Description	Q'ty	S.No.	I/C	REMARKS	Weight (kgf)	Weight (lb)
010	6C040-51370	COVER SEAT UNDER	1				0.38	0.836
020	01125-50818	BOLT	2				0.015	0.033
020	01125-60816	BOLT	2		«		0.01	0.022
030	6C070-51383	COVER SEAT UNDER LH	1				0.39	0.858
040	6C070-51390	COVER SEAT UNDER RH	1				0.49	1.078
050	01125-60816	BOLT	4				0.01	0.022
060	6C070-52730	STAY FENDER	1				1.34	2.948
070	6C040-52790	CASE TOOLS	1				0.23	0.506
080	01025-50616	BOLT	2				0.005	0.011
090	01125-51020	BOLT	2				0.005	0.011

silverhorn.co.uk

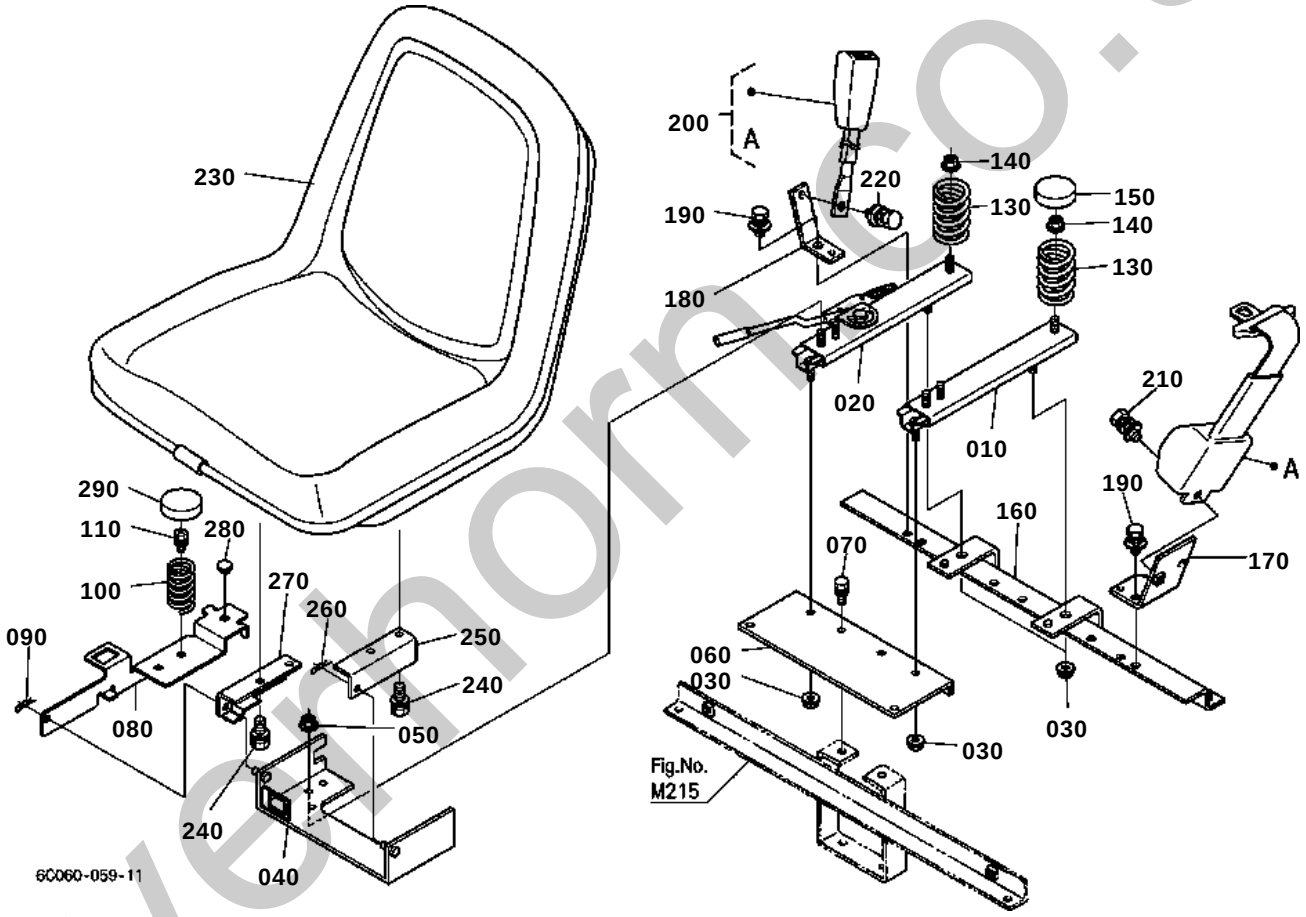

silvermorn.co.uk

SEAT SUPPORT

S.No.;<=57577

↔ Interchangeable; ≠ not interchangeable; ← new for old; → old for new

REF.No	Part No.	Description	Q'ty	S.No.	I/C	REMARKS	Weight (kgf)	Weight (lb)
010	6C140-45910	ADJUSTER SEAT LH	1				0.65	1.43
020	6C140-45920	ADJUSTER SEAT RH	1				0.85	1.87
030	02121-50080	NUT	4				0.01	0.022
040	6C060-45950	STAY SEAT RAIL	1				0.98	2.156
050	02121-50080	NUT	4				0.01	0.022
060	6C070-45940	SUPPORT SEAL RAIL	1				0.78	1.716
070	01123-60816	BOLT	2				0.01	0.022
080	6C060-45963	STAY SEAT SWITCH	1	<=51929			0	0
080	6C060-45964	STAY SEAT SWITCH	1	>=51930	¬		0.45	0.99
090	05525-50800	PIN SNAP	1				0.001	0.0022
100	6C060-45983	SPRING SEAT SWITCH	1				0.031	0.0682
110	01125-60820	BOLT	1				0.015	0.033
120	99999-99999	BLANK	0				0	0
130	6C040-45990	SPRING SEAT	2				0.2	0.44
140	02121-50080	NUT	2				0.01	0.022
150	66301-52820	CAP SPRING	1				0.04	0.088
160	6C070-52770	STAY FENDER	1				1.28	2.816
170	6C070-52760	STAY SEAT BELT LH	1				0.115	0.253
180	6C040-52770	STAY SEAT BELT RH	1				0.1	0.22
190	01125-50818	BOLT	2				0.015	0.033
200	K2561-56850	ASSY BELT SEAT	1				0.81	1.782
210	01135-61020	BOLT	1				0.015	0.033
220	01135-61025	BOLT	1				0.04	0.088
230	6C045-45700	ASSY SEAT	1				8	17.6
240	01123-60816	BOLT	4				0.01	0.022
250	6C060-45940	STAY SEAT LH	1				0.21	0.462
260	05525-50800	PIN SNAP	1				0.001	0.0022
270	6C060-45970	STAY SEAT RH	1				0.24	0.528
280	38240-29870	CUSHION	1				0.004	0.0088
290	6C060-45990	CAP SPRING	1				0.011	0.0242

silvermorn.co.uk

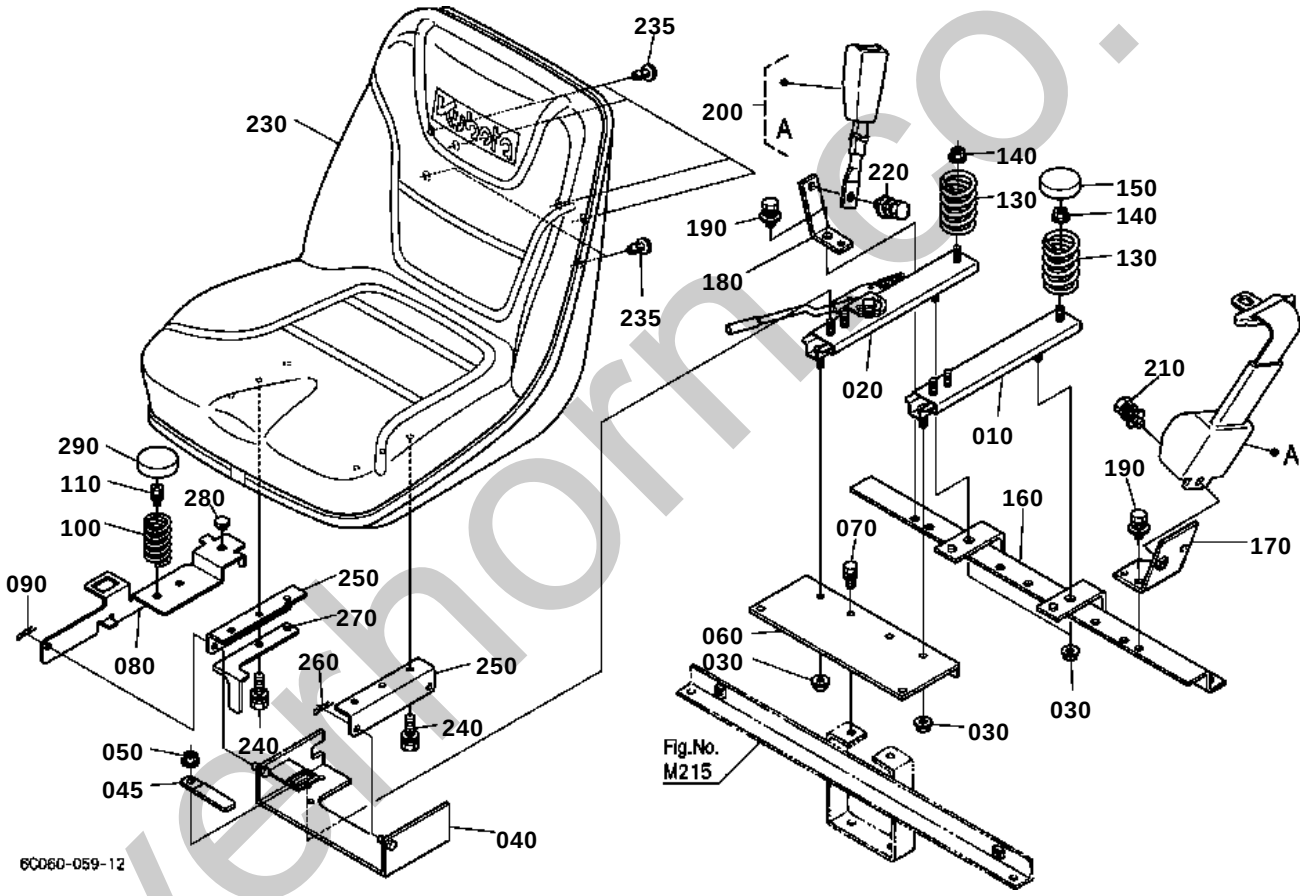

silverthorn.co.uk

SEAT SUPPORT
S.No.;>=57578

↔ Interchangeable; ≠ not interchangeable; ← new for old; → old for new

REF.No	Part No.	Description	Q'ty	S.No.	I/C	REMARKS	Weight (kgf)	Weight (lb)
010	6C140-45910	ADJUSTER SEAT LH	1				0.65	1.43
020	6C140-45920	ADJUSTER SEAT RH	1				0.85	1.87
030	02121-50080	NUT	4				0.01	0.022
040	6C190-45950	STAY SEAT RAIL	1				1.01	2.222
045	13824-67580	CLAMP CORD	1				0.006	0.0132
050	02121-50080	NUT	4				0.01	0.022
060	6C070-45940	SUPPORT SEAL RAIL	1				0.78	1.716
070	01123-60816	BOLT	2				0.01	0.022
080	6C190-45970	STAY SEAT SWITCH	1				0.45	0.99
090	05525-50800	PIN SNAP	1				0.001	0.0022
100	6C060-45983	SPRING SEAT SWITCH	1				0.031	0.0682
110	01125-60820	BOLT	1				0.015	0.033
120	99999-99999	BLANK	0				0	0
130	6C040-45990	SPRING SEAT	2				0.2	0.44
140	02121-50080	NUT	2				0.01	0.022
150	66301-52820	CAP SPRING	1				0.04	0.088
160	6C070-52770	STAY FENDER	1				1.28	2.816
170	6C070-52760	STAY SEAT BELT LH	1				0.115	0.253
180	6C040-52770	STAY SEAT BELT RH	1				0.1	0.22
190	01125-50818	BOLT	2				0.015	0.033
190	01125-60820	BOLT	2		«		0.015	0.033
200	K2561-56850	ASSY BELT SEAT	1				0.81	1.782
210	01135-61020	BOLT	1				0.015	0.033
220	01135-61025	BOLT	1				0.04	0.088
230	K2571-56110	SEAT	1				9	19.8
235	K2571-56120	PLUG	6				0.001	0.0022
240	01123-50820	BOLT	4				0.011	0.0242
250	6C070-45960	STAY SEAT	2				0.24	0.528
260	05525-50800	PIN SNAP	1				0.001	0.0022
270	6C070-45730	SPRING PLATE	1				0.04	0.088
280	38240-29870	CUSHION	1				0.004	0.0088
290	6C060-45990	CAP SPRING	1				0.011	0.0242

silvermorn.co.uk

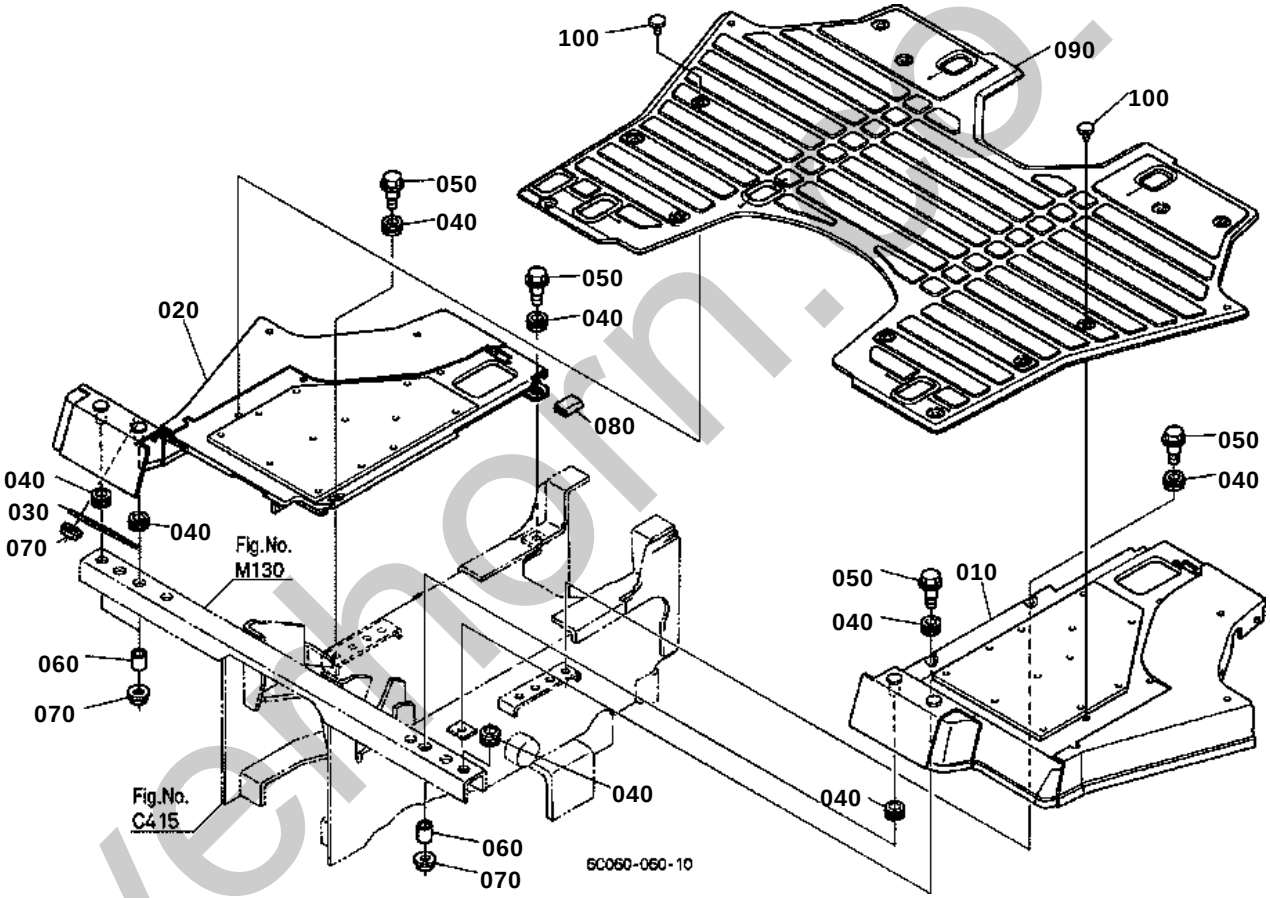

silverthorn.co.uk

↔ Interchangeable; ≠ not interchangeable; ← new for old; → old for new

REF.No	Part No.	Description	Q'ty	S.No.	I/C	REMARKS	Weight (kgf)	Weight (lb)
010	6C170-51310	COMP.STEP LH	1				6	13.2
020	6C170-51320	COMP.STEP RH	1				6.5	14.3
030	6C040-51330	SUPPORT STEP RH	1				0.073	0.1606
040	6A100-51380	CUSHION	8				0.003	0.0066
050	6C040-51342	BOLT	4				0.017	0.0374
060	6C040-51390	COLLAR	4				0.003	0.0066
070	02121-50080	NUT	6				0.01	0.022
080	6C040-51350	CUSHION	1				0.002	0.0044
090	6C070-51360	MAT STEP	1				2.2	4.84
100	67955-51340	STOPPER	14				0.001	0.0022

silverhorn.co.uk

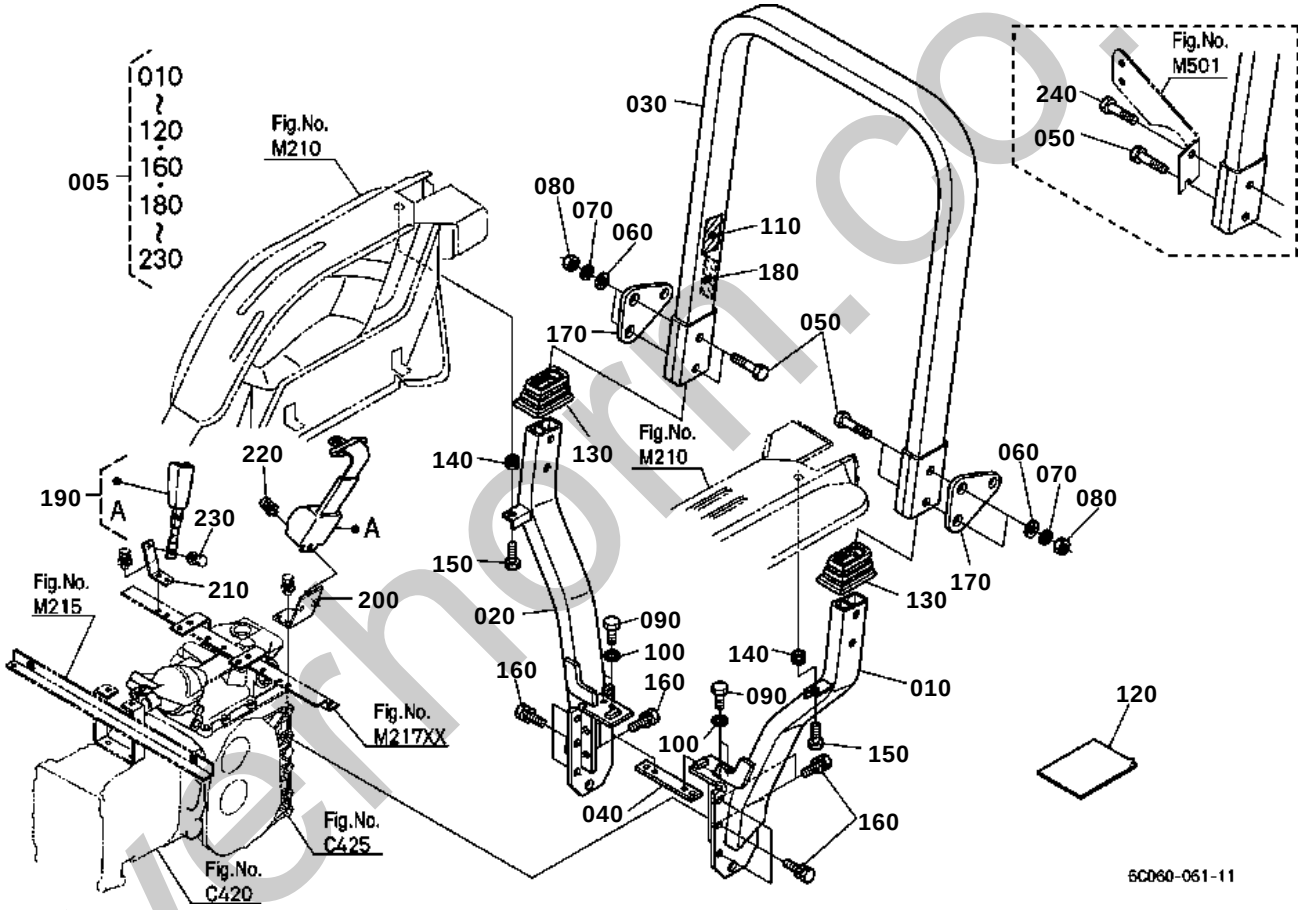

silvermoon.co.uk

↔ Interchangeable; ≠ not interchangeable; ← new for old; → old for new

REF.No	Part No.	Description	Q'ty	S.No.	I/C	REMARKS	Weight (kgf)	Weight (lb)
005	6C170-88500	ASSY ROPS	1				0	0
010	99999-99999	FRAME LOWER LH	1				0	0
020	99999-99999	FRAME LOWER RH	1				0	0
030	99999-99999	FRAME UPPER	1				0	0
040	99999-99999	PLATE CONNECTOR	1				0	0
050	0Y109-50944	BOLT	4				0.1	0.22
060	04013-60140	WASHER PLAIN	4				0.01	0.022
070	0Y450-50090	WASHER SPRING	4				0.007	0.0154
080	0Y205-50090	NUT	4				0.03	0.066
090	0Y109-50616	BOLT	4				0.2	0.44
100	0Y450-50060	WASHER SPRING	4				0.003	0.0066
110	6C140-47460	LABEL ROPS WARNING	1			ENGLISH	0.001	0.0022
110	6C141-47460	LABEL ROPS WARNING	1			FRENCH	0.001	0.0022
120	99999-99999	MANUAL ASSEMBLY	1				0	0
130	6C040-72210	COVER ROPS	2				0.066	0.1452
140	6C040-51380	CUSHION	2				0	0
140	6A100-51380	CUSHION	2		«		0.003	0.0066
150	6C040-51342	BOLT	2				0.017	0.0374
160	01123-51235	BOLT	10				0.041	0.0902
170	6C140-54980	STAY HAZARD LIGHT	2				0.15	0.33
180	6C140-54990	REFLECTOR LABEL	2				0.003	0.0066
190	K2561-56850	ASSY BELT SEAT	1				0.81	1.782
200	6C070-52760	STAY SEAT BELT LH	1				0.115	0.253
210	6C040-52770	STAY SEAT BELT RH	1				0.1	0.22
220	01135-61020	BOLT	1				0.015	0.033
230	01135-61025	BOLT	1				0.04	0.088
240	0Y109-50948	BOLT	1				0.11	0.242

silverhorn.co.uk

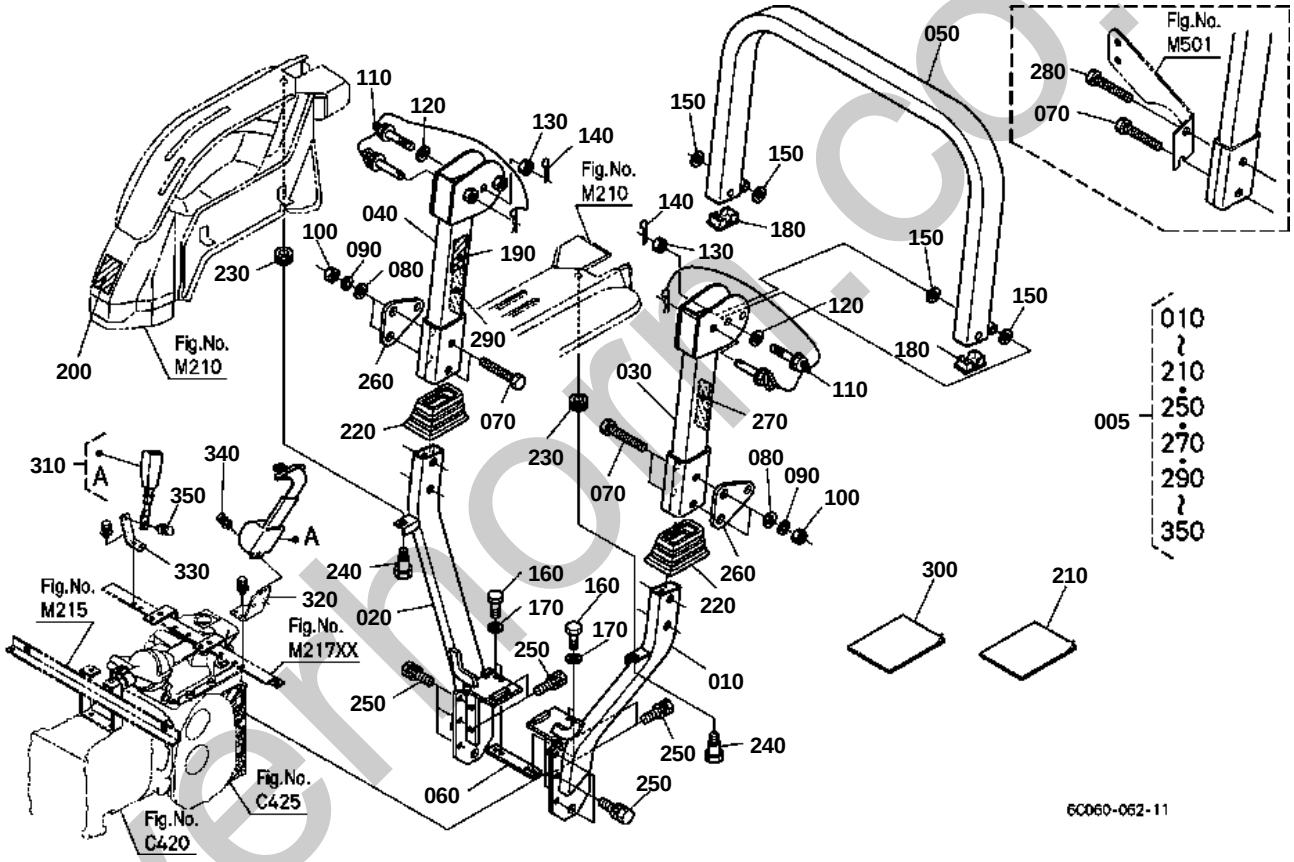

silverfront.co.uk

↔ Interchangeable; ≠ not interchangeable; ← new for old; → old for new

REF.No	Part No.	Description	Q'ty	S.No.	I/C	REMARKS	Weight (kgf)	Weight (lb)
005	6C170-89500	ASSY ROPS	1				0	0
010	99999-99999	FRAME LOWER LH	1				0	0
020	99999-99999	FRAME LOWER RH	1				0	0
030	99999-99999	FRAME MIDDLE LH	1				0	0
040	99999-99999	FRAME MIDDLE RH	1				0	0
050	99999-99999	FRAME UPPER	1				0	0
060	99999-99999	PLATE CONNECTOR	1				0	0
070	0Y109-50952	BOLT	4				0.11	0.242
080	04013-60140	WASHER PLAIN	4				0.01	0.022
090	0Y450-50090	WASHER SPRING	4				0.007	0.0154
100	0Y205-50090	NUT	4				0.03	0.066
110	TA240-48752	SET BOLT	2				0.435	0.957
120	04013-60160	WASHER PLAIN	2				0.01	0.022
130	02254-50160	NUT	2				0.04	0.088
140	05511-50430	PIN SPLIT	2				0.004	0.0088
150	04013-60160	WASHER PLAIN	4				0.01	0.022
160	0Y109-50616	BOLT	4				0.2	0.44
170	0Y450-50060	WASHER SPRING	4				0.003	0.0066
180	TC050-48773	COVER ROPS	2				0.03	0.066
190	3A111-95540	LABEL ROPS CAUTION	1			ENGLISH	0.003	0.0066
190	3A112-95540	LABEL ROPS CAUTION	1			FRENCH	0.003	0.0066
200	TA240-98480	LABEL ROPS WARNING	1			ENGLISH	0.005	0.011
200	3A112-98480	LABEL ROPS WARNING	1			FRENCH	0.004	0.0088
210	99999-99999	MANUAL ASSEMBLY	1				0	0
220	6C040-72210	COVER ROPS	2				0.066	0.1452
230	6C040-51380	CUSHION	2				0	0
230	6A100-51380	CUSHION	2		«		0.003	0.0066
240	6C040-51342	BOLT	2				0.017	0.0374
250	01123-51235	BOLT	10				0.041	0.0902
260	6C140-54980	STAY HAZARD LIGHT	2				0.15	0.33
270	6C140-54990	REFLECTOR LABEL	1				0.003	0.0066
280	0Y109-50948	BOLT	1				0.11	0.242
290	6C140-54990	REFLECTOR LABEL	1				0.003	0.0066
300	TA240-48680	OPERATOR'S MANUAL	1				0.025	0.055
310	K2561-56850	ASSY BELT SEAT	1				0.81	1.782
320	6C070-52760	STAY SEAT BELT LH	1				0.115	0.253
330	6C040-52770	STAY SEAT BELT RH	1				0.1	0.22
340	01135-61020	BOLT	1				0.015	0.033
350	01135-61025	BOLT	1				0.04	0.088

silverthorn.co.uk

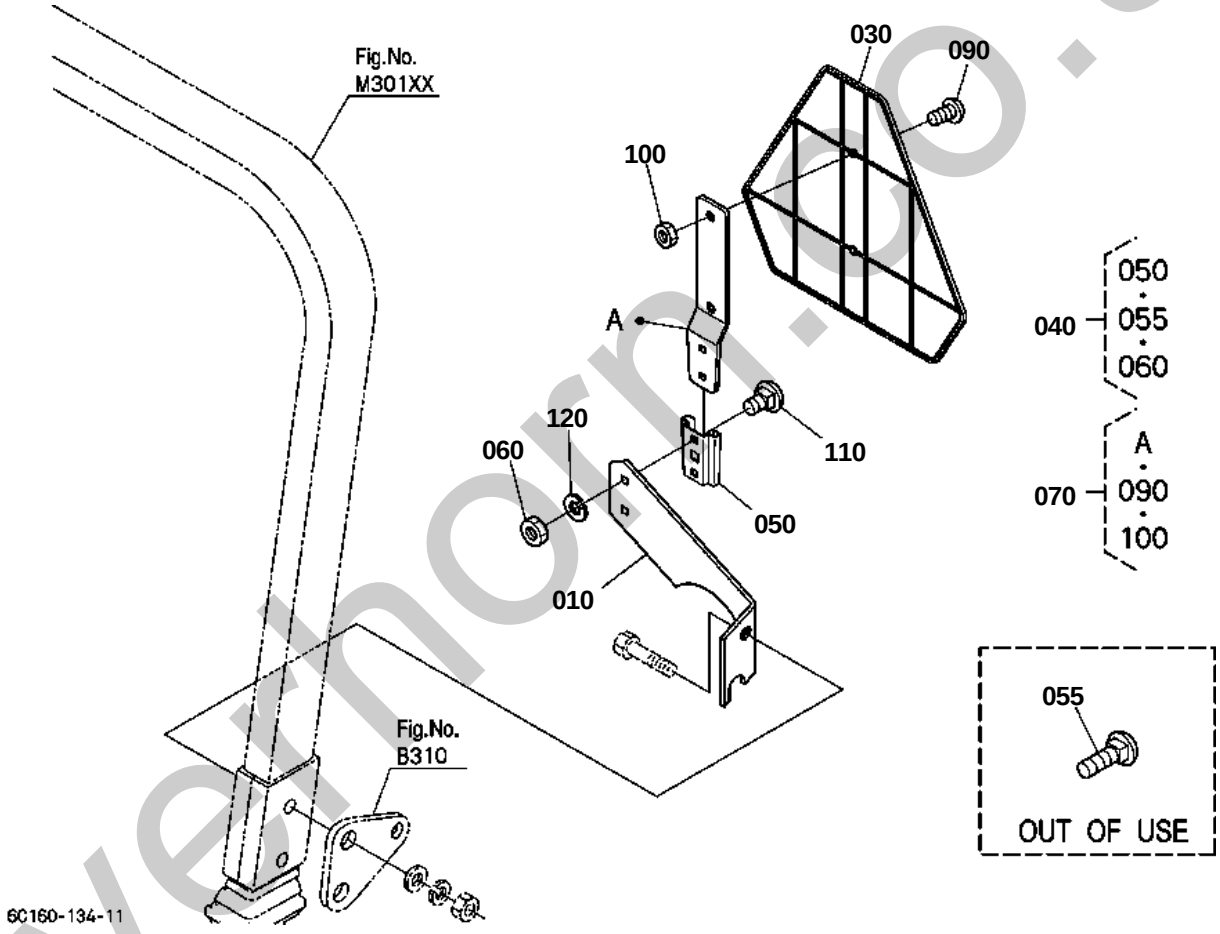

silverthorn.co.uk

OLD PARTS

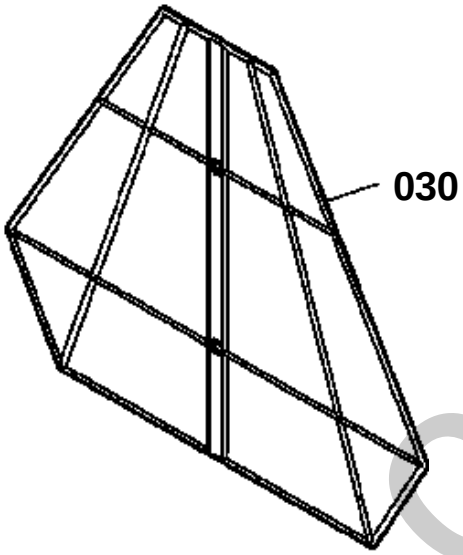

6C160-800-10

silverhorn.co.uk

SMV EMBLEM

↔ Interchangeable; ≠ not interchangeable; ← new for old; → old for new

REF.No	Part No.	Description	Q'ty	S.No.	I/C	REMARKS	Weight (kgf)	Weight (lb)
010	6C140-54950	BRACKET SMV	1				0.85	1.87
020	99999-99999	BLANK	0				0	0
030	7L500-89910	SIGN SMV	1	<=61889		NOT SALE	0.32	0.704
030	7L500-89912	SIGN SMV	1	>=61890	¬		0.32	0.704
040	7L500-89920	SOCKET SMV SIGN	1				0.1	0.22
050	7L500-89930	SOCKET-MTG SMV	1				0.05	0.11
055	7L500-89940	BOLT SQUARE NECK	2			OUT OF USE	0.01	0.022
060	7L500-89950	NUT	2				0.004	0.0088
070	7L500-89960	SPADE SMV SIGN	1				0.24	0.528
080	99999-99999	BLANK	0				0	0
090	7L500-89980	VIS	2				0.02	0.044
100	7L500-89990	NUT	2				0.001	0.0022
110	7L500-89810	BOLT SQUARE NECK	2				0.011	0.0242
120	04512-60080	WASHER SPRING	2	>=54746			0.002	0.0044

silverhorn.co.uk

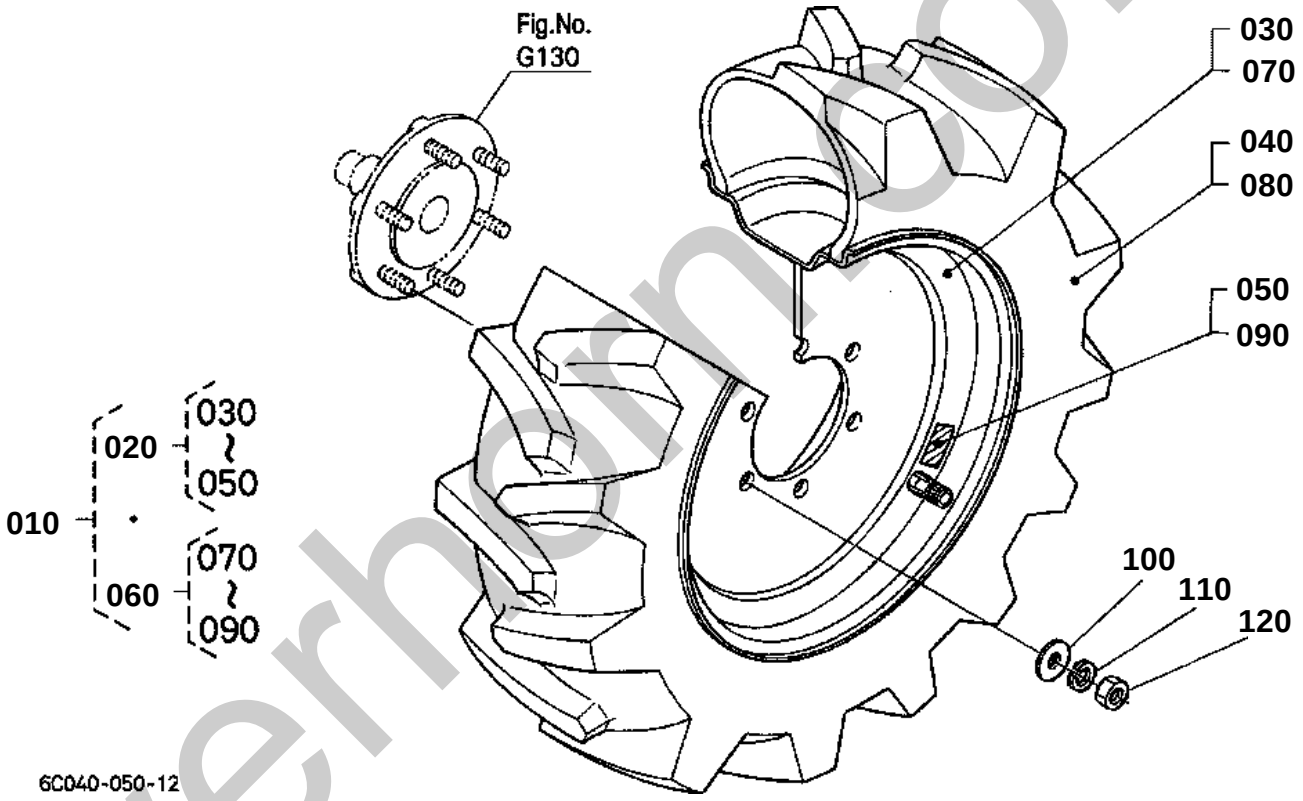

silverhomes.co.uk

↔ Interchangeable; ≠ not interchangeable; ← new for old; → old for new

REF.No	Part No.	Description	Q'ty	S.No.	I/C	REMARKS	Weight (kgf)	Weight (lb)
010	6C040-50310	ASSY TIRE	1				0	0
020	6C040-50320	ASSY TIRE LH	1				0	0
030	6C040-50240	WHEEL	1				0	0
040	6C040-50350	TIRE	1				0	0
050	6C040-50360	LABEL TIRE LH	1			NOT SALE	0	0
060	6C040-50330	ASSY TIRE RH	1				0	0
070	6C040-50240	WHEEL	1				0	0
080	6C040-50350	TIRE	1				0	0
090	6C040-50370	LABEL TIRE RH	1			NOT SALE	0	0
100	04013-60120	WASHER PLAIN	12				0.01	0.022
110	04512-60120	WASHER SPRING	12				0.005	0.011
120	02176-50120	NUT	12				0.01	0.022

silverhorn.co.uk

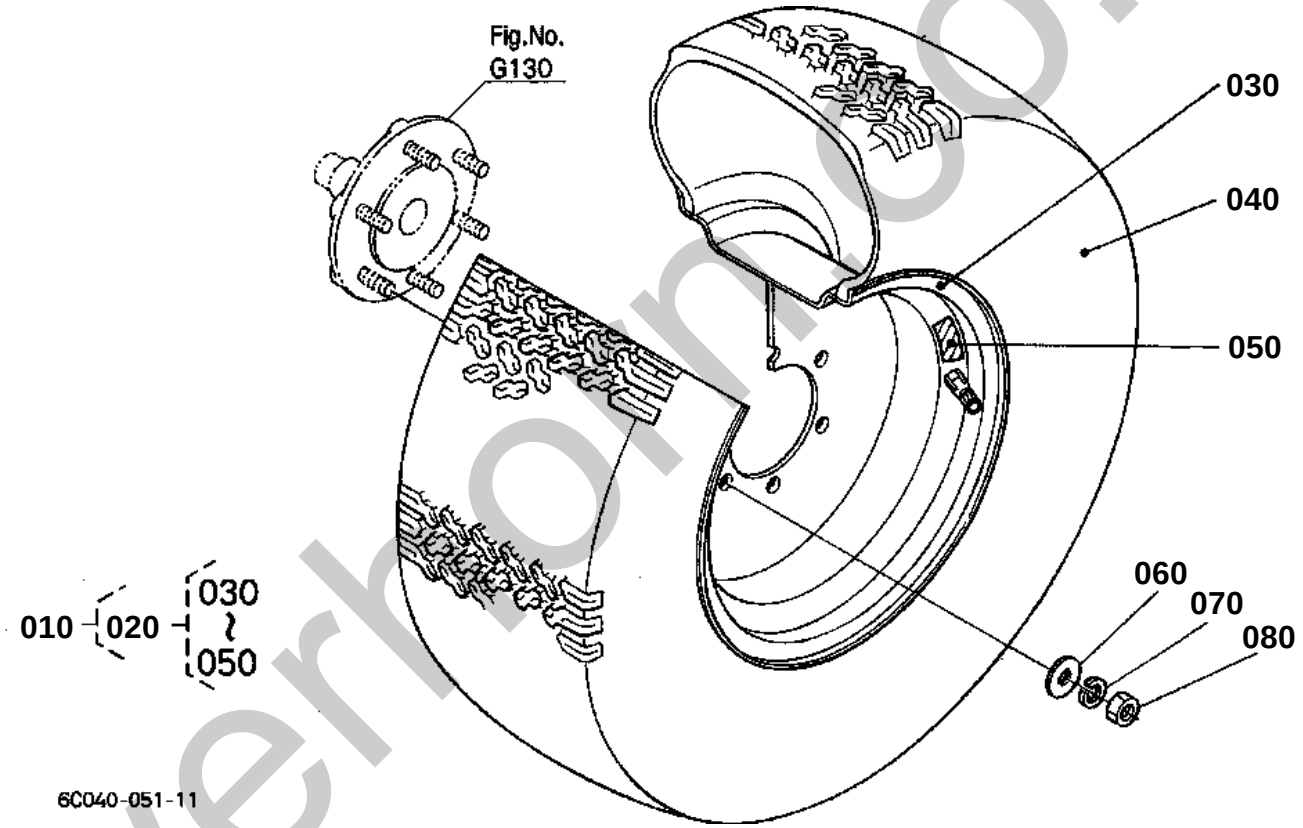

silverhomeco.uk

FRONT WHEEL(23*8.50-12)

↔ Interchangeable; ≠ not interchangeable; ← new for old; → old for new

REF.No	Part No.	Description	Q'ty	S.No.	I/C	REMARKS	Weight (kgf)	Weight (lb)
010	6C040-50410	ASSY TIRE	1				0	0
020	6C040-50420	ASSY TIRE	2				0	0
030	6C040-50430	WHEEL	2				0	0
040	6C040-50440	TIRE	2				0	0
050	6C040-50450	LABEL TIRE	2			NOT SALE	0	0
060	04013-60120	WASHER PLAIN	12				0.01	0.022
070	04512-60120	WASHER SPRING	12				0.005	0.011
080	02176-50120	NUT	12				0.01	0.022

silverhorn.co.uk

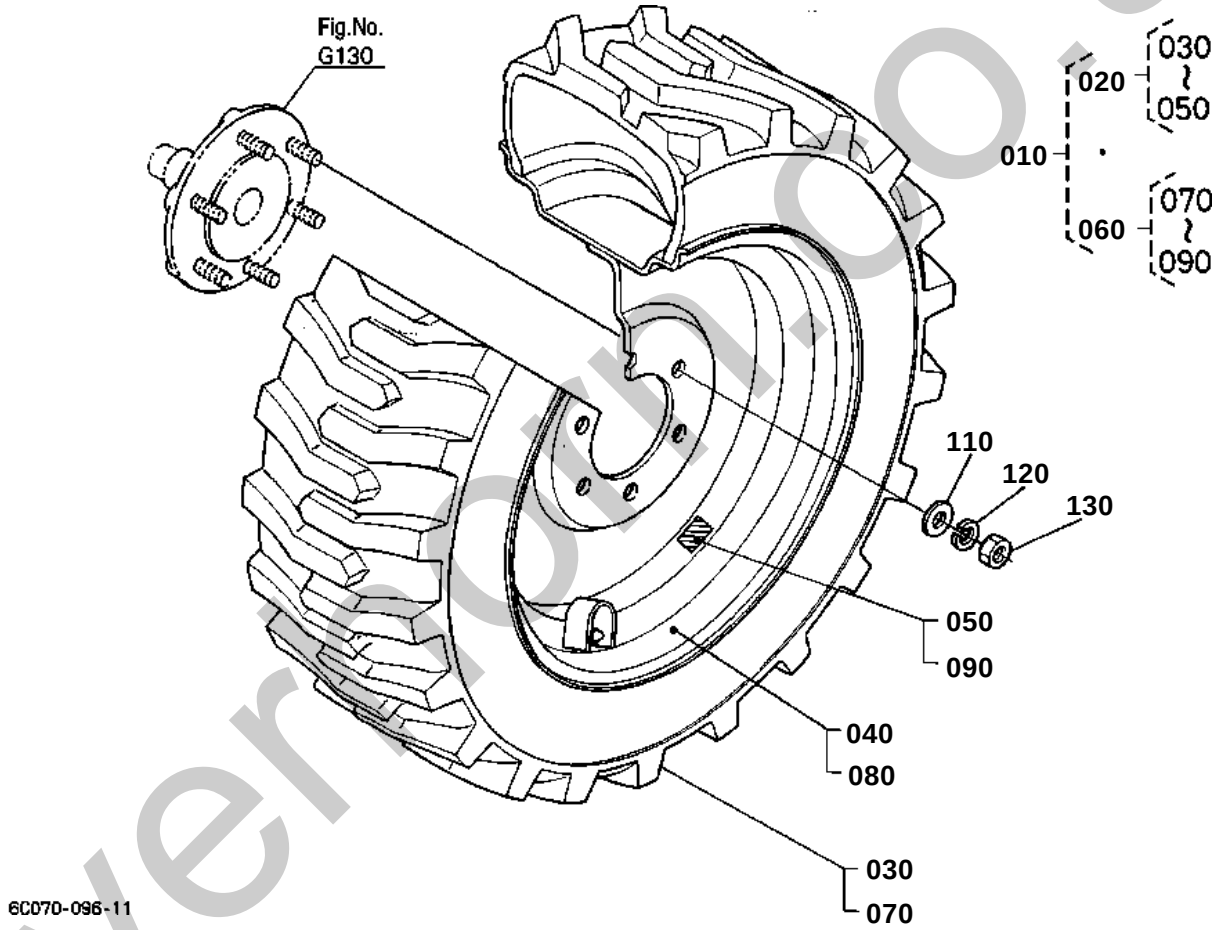

silverhorn.co.uk

FRONT WHEEL(23*8.50-14R4)

↔ Interchangeable; ≠ not interchangeable; ← new for old; → old for new

REF.No	Part No.	Description	Q'ty	S.No.	I/C	REMARKS	Weight (kgf)	Weight (lb)
010	32721-50500	ASSY TIRE	1				0	0
020	32721-50510	ASSY TIRE RH	1				0	0
030	32721-50530	TIRE	1				11	24.2
040	32721-50540	WHEEL	1				11	24.2
050	32721-50560	LABEL LH	1			NOT SALE	0	0
060	32721-50520	ASSY TIRE RH	1				0	0
070	32721-50530	TIRE	1				11	24.2
080	32721-50540	WHEEL	1				11	24.2
090	32721-50550	LABEL RH	1			NOT SALE	0	0
100	99999-99999	BLANK	0				0	0
110	04013-60120	WASHER PLAIN	12				0.01	0.022
120	04512-60120	WASHER SPRING	12				0.005	0.011
130	02174-50120	NUT	12				0.01	0.022

silverhorn.co.uk

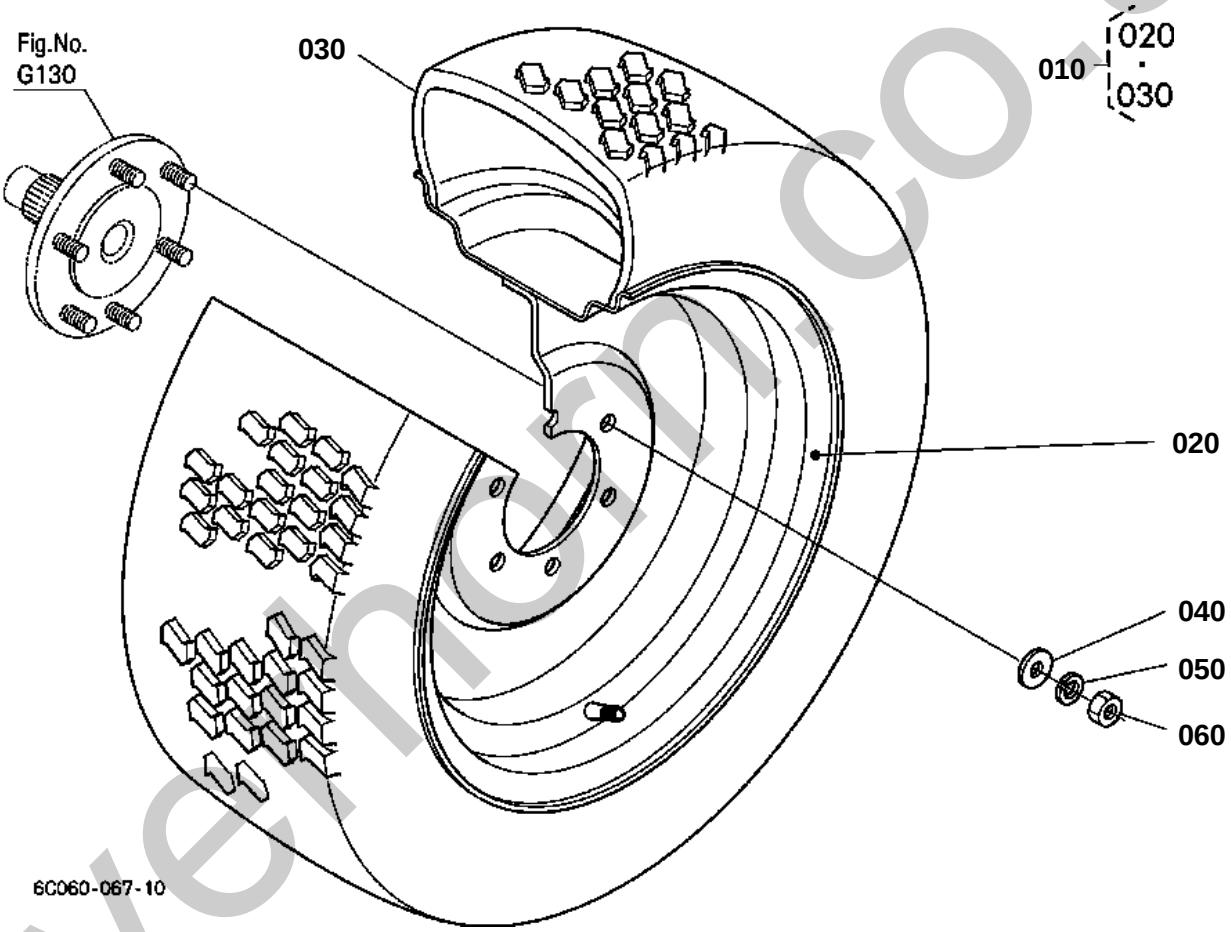

silverhorn.co.uk

FRONT WHEEL(24*8.50-14)

↔ Interchangeable; ≠ not interchangeable; ← new for old; → old for new

REF.No	Part No.	Description	Q'ty	S.No.	I/C	REMARKS	Weight (kgf)	Weight (lb)
010	6C070-50220	TIRE ASSY	2				0	0
020	6C070-50230	WHEEL	2				0	0
030	6C070-50240	TIRE	2				0	0
040	04013-60120	WASHER PLAIN	12				0.01	0.022
050	04512-60120	WASHER SPRING	12				0.005	0.011
060	02174-50120	NUT	12				0.01	0.022

silverhorn.co.uk

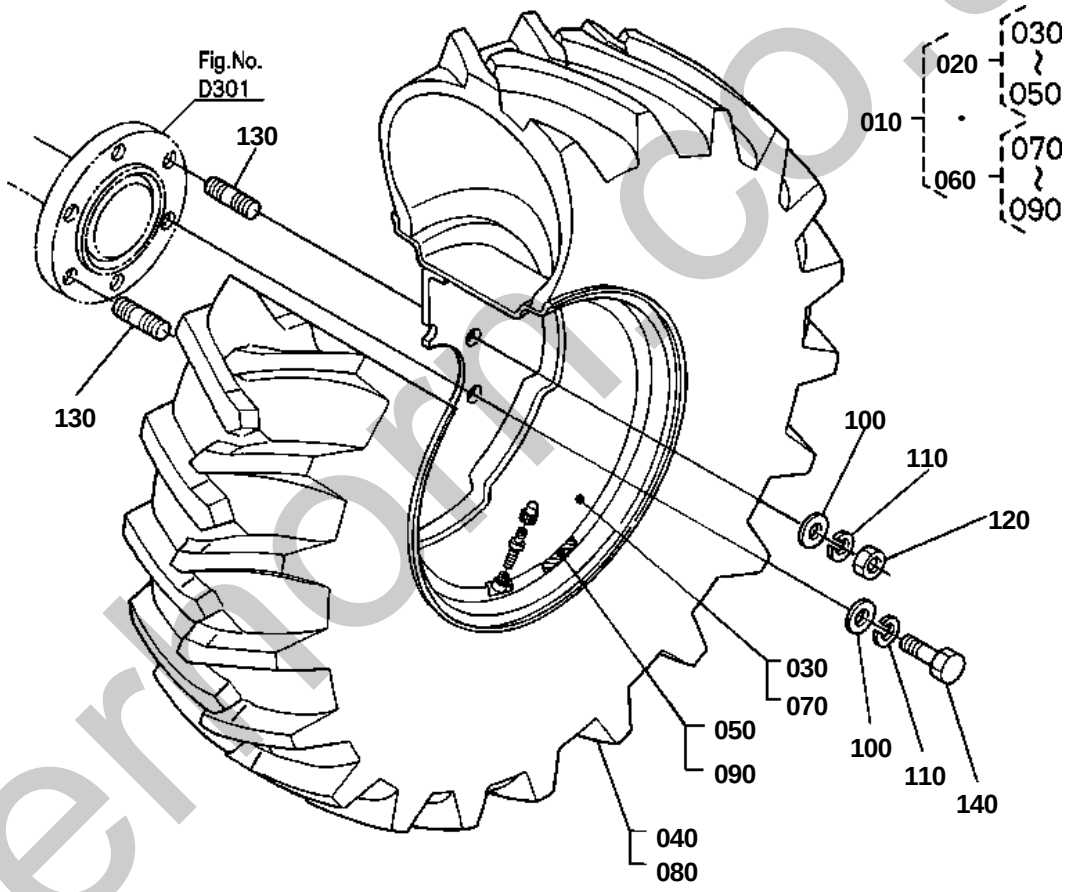

6C070-088-11

silverhorn.co.uk

↔ Interchangeable; ≠ not interchangeable; ← new for old; → old for new

REF.No	Part No.	Description	Q'ty	S.No.	I/C	REMARKS	Weight (kgf)	Weight (lb)
010	66429-17610	ASSY TIRE	1				0	0
020	66429-17620	ASSY TIRE LH	1				0	0
030	32701-27950	WHEEL	1				0	0
040	66429-17650	TIRE	1				0	0
050	66429-17660	LABEL TIRE LH	1			NOT SALE	0	0
060	66429-17630	ASSY TIRE RH	1				0	0
070	32701-27950	WHEEL	1				0	0
080	66429-17650	TIRE	1				0	0
090	66429-17670	LABEL TIRE RH	1			NOT SALE	0	0
100	04011-60160	WASHER PLAIN	12				0.01	0.022
110	04512-60160	WASHER SPRING	12				0.01	0.022
120	02076-50160	NUT	4				0.03	0.066
130	01517-51632	STUD	4				0.076	0.1672
140	01173-51635	BOLT	8				0.008	0.0176

silverhorn.co.uk

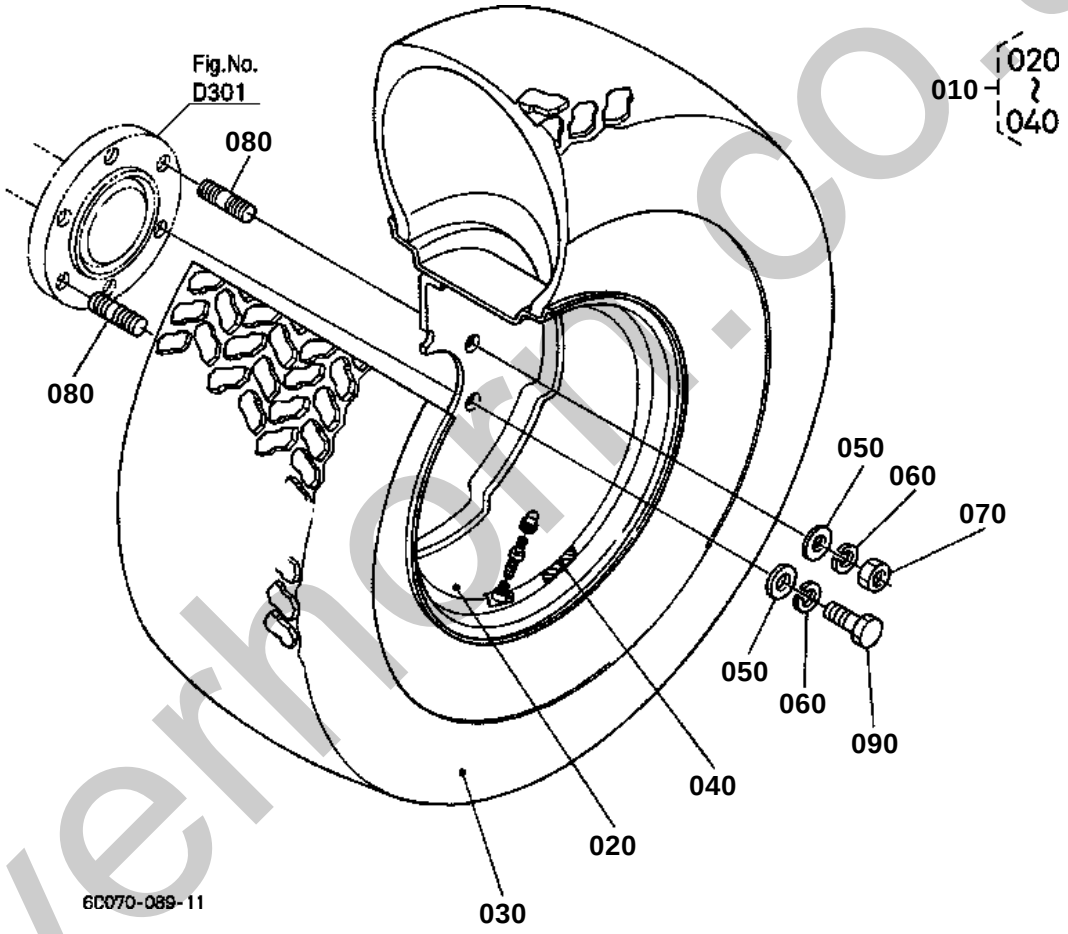

silverhorn.co.uk

↔ Interchangeable; ≠ not interchangeable; ← new for old; → old for new

REF.No	Part No.	Description	Q'ty	S.No.	I/C	REMARKS	Weight (kgf)	Weight (lb)
010	66428-17610	ASSY TIRE	2				0	0
020	32701-27950	WHEEL	2				0	0
030	66428-17630	TIRE	2				0	0
040	66428-17640	LABEL	2			NOT SALE	0	0
050	04011-60160	WASHER PLAIN	12				0.01	0.022
060	04512-60160	WASHER SPRING	12				0.01	0.022
070	02076-50160	NUT	4				0.03	0.066
080	01517-51632	STUD	4				0.076	0.1672
090	01173-51635	BOLT	8				0.008	0.0176

silverhorn.co.uk

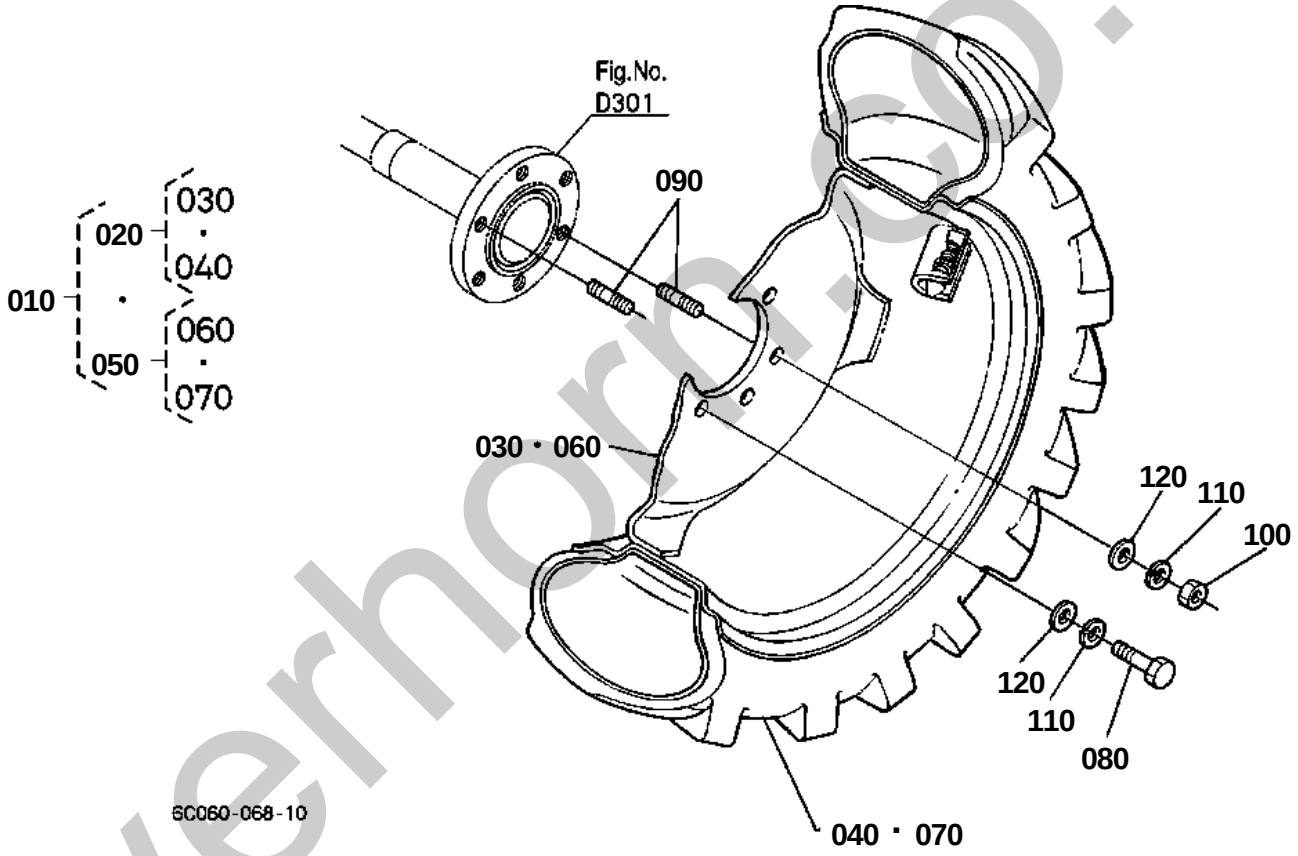

silverhorn.co.uk

↔ Interchangeable; ≠ not interchangeable; ← new for old; → old for new

REF.No	Part No.	Description	Q'ty	S.No.	I/C	REMARKS	Weight (kgf)	Weight (lb)
010	32701-50010	ASSY TIRE	1				0	0
020	32701-50110	ASSY TIRE LH	1				0	0
030	32701-27950	WHEEL	1				0	0
040	32701-50130	TIRE	1				15	33
050	32701-50210	ASSY TIRE RH	1				0	0
060	32701-27950	WHEEL	1				0	0
070	32701-50130	TIRE	1				15	33
080	01073-51635	BOLT	8				0.086	0.1892
090	01517-51632	STUD	4				0.076	0.1672
100	02076-50160	NUT	4				0.03	0.066
110	04512-60160	WASHER SPRING	12				0.01	0.022
120	04011-60160	WASHER PLAIN	12				0.01	0.022

silverhorn.co.uk

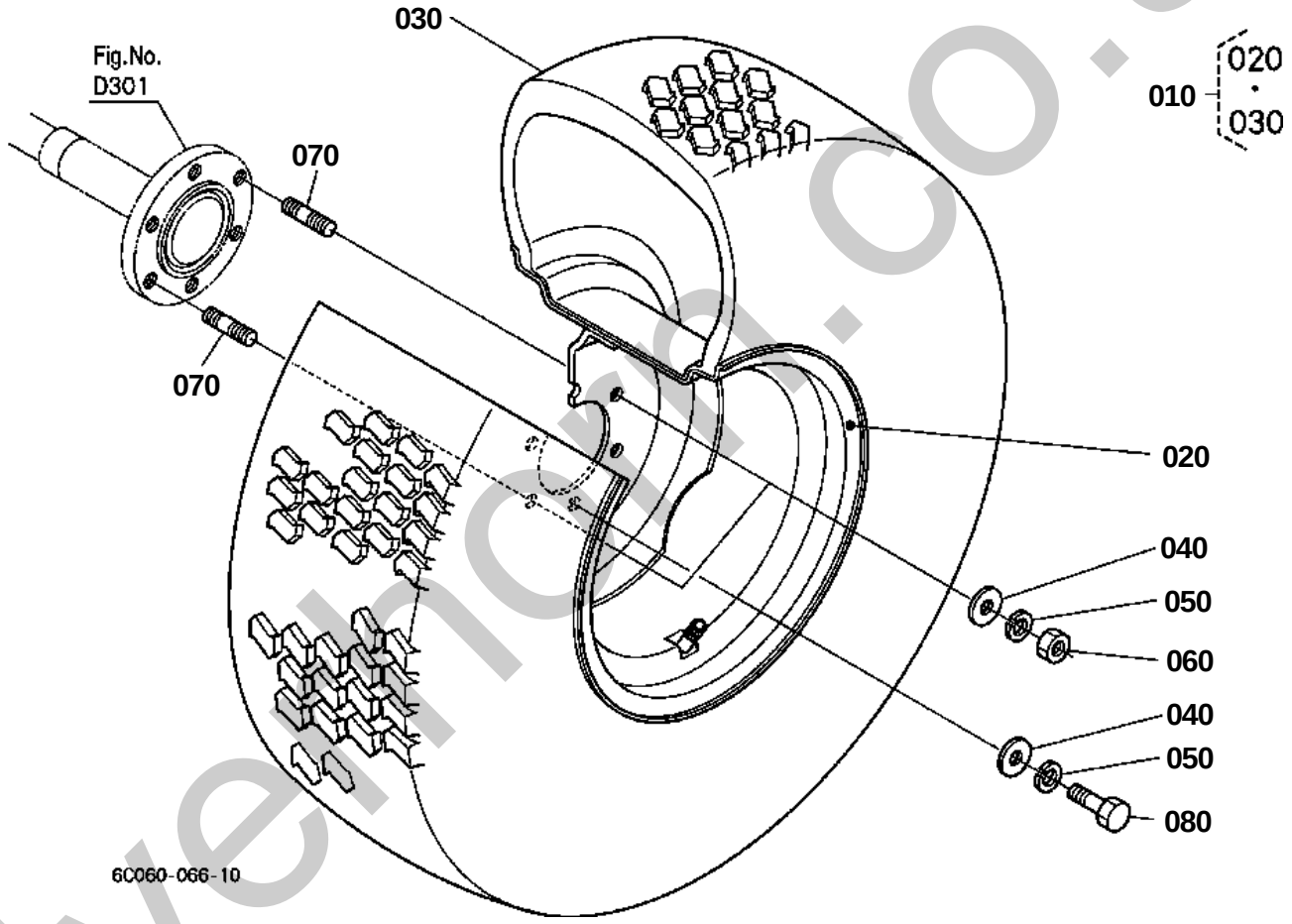

silverhorn.co.uk

↔ Interchangeable; ≠ not interchangeable; ← new for old; → old for new

REF.No	Part No.	Description	Q'ty	S.No.	I/C	REMARKS	Weight (kgf)	Weight (lb)
010	6C070-50320	ASSY TIRE	2				0	0
020	6C070-50330	WHEEL	2				0	0
030	6C070-50340	TIRE	2				0	0
040	04011-60160	WASHER PLAIN	12				0.01	0.022
050	04512-60160	WASHER SPRING	12				0.01	0.022
060	02076-50160	NUT	4				0.03	0.066
070	01517-51632	STUD	4				0.076	0.1672
080	01173-51635	BOLT	8				0.008	0.0176

silverhorn.co.uk

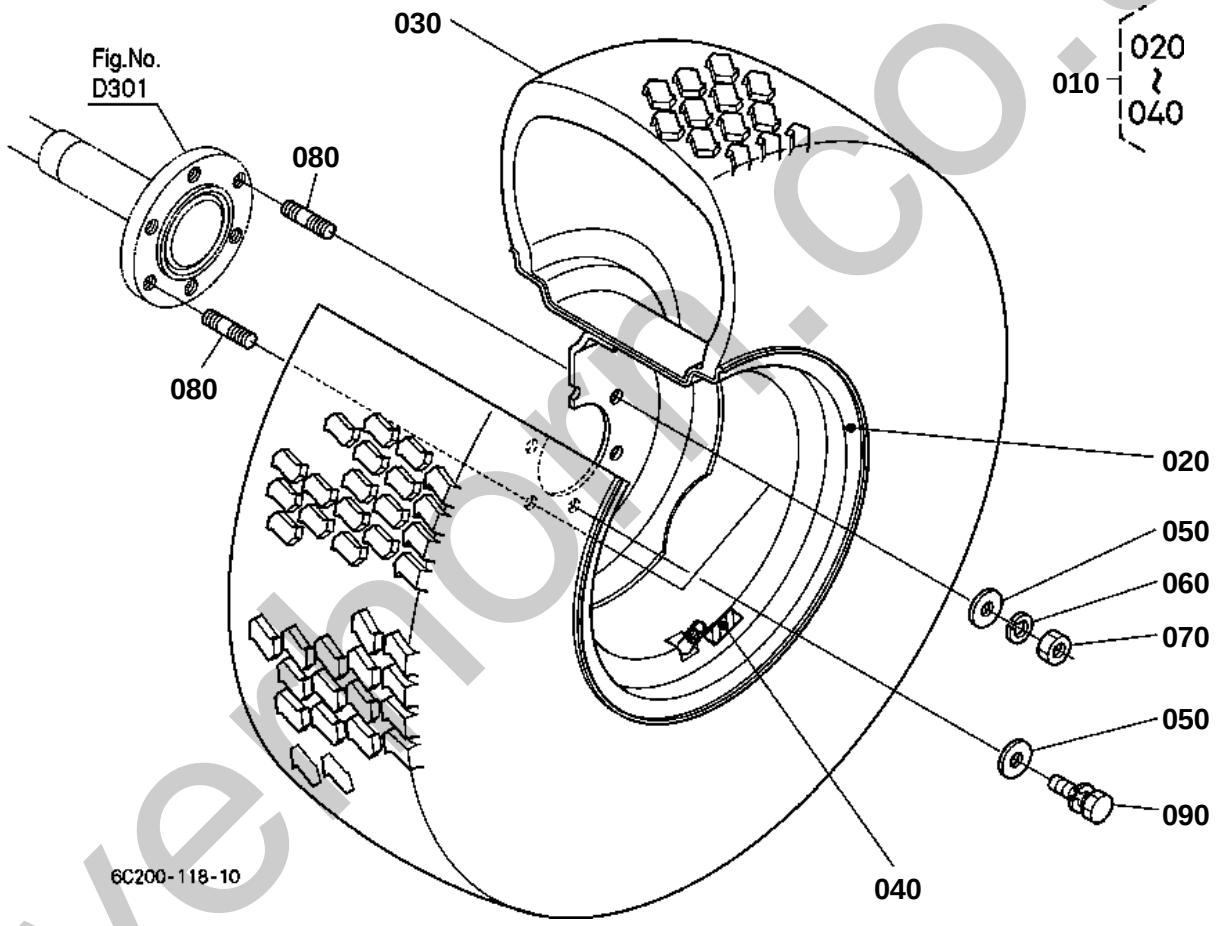

silverthorn.co.uk

↔ Interchangeable; ≠ not interchangeable; ← new for old; → old for new

REF.No	Part No.	Description	Q'ty	S.No.	I/C	REMARKS	Weight (kgf)	Weight (lb)
010	6C200-50320	ASSY TIRE	2				0	0
020	6C070-50330	WHEEL	2				0	0
030	6C200-50340	TIRE	2				0	0
040	6C070-50350	LABEL TIRE	2			NOT SALE	0	0
050	04013-60160	WASHER PLAIN	12				0.01	0.022
060	04512-60160	WASHER SPRING	4				0.01	0.022
070	02176-50160	NUT	4				0.021	0.0462
080	01517-51632	STUD	4				0.076	0.1672
090	01133-51635	BOLT	8				0.09	0.198

silverhorn.co.uk