MANITOU AMERICAS, INC.
One Gehl Way
P. O. Box 179
West Bend, WI 53095-0179 U.S.A

Website: www.us.manitou.com

For parts orders contact your Manitou dealer or call:
Manitou Americas Parts Department. 262-334-6653
Fax (254) 867--6504

MT 10055 XT
Telescopic Handler

Parts Manual

Catalog No. 50960002 Rev. A

NOTE: *Manitou forklift manuals are continually updated and subject to change without prior notice. If your forklift model or parts are not found in this manual, please contact your dealer or the Manitou Americas Parts Department for the latest information and parts availability.*

silverhorn.co.uk

silverhorn.co.uk

NOTE: *This parts manual identifies both standard and optional features for this model. Depending on the features of your machine, some of the items identified in the parts lists may, or may not be included with the machine.*

The Table of Contents pages list the page locations of various component groups on the machine.

When ordering service parts, specify the part number, full description, quantity required, and the unit model and serial number.

Model and serial numbers for this unit are stamped on a plate located inside the operator's station. The serial number is also stamped on the top front of the frame. The following reference shows the breakdown of the serial number:

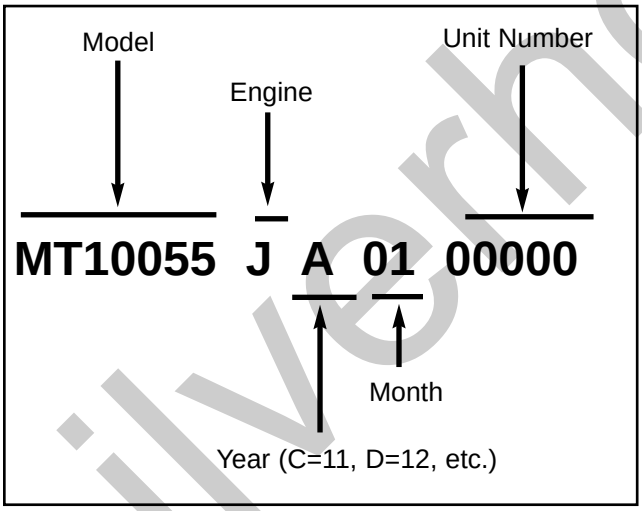

"Right" and "left" are determined from a position standing behind the unit and facing the direction of forward travel.

Manitou North America, Inc. reserves the right to make changes or improvements in the design or construction of any part of the unit without incurring the obligation to install such changes on any unit previously delivered.

Grease fittings and common attaching hardware, such as cotter pins, set screws, woodruff keys, screws and nuts are included in the parts list, indented below the part they are associated with, but NOT illustrated, except where a particular routing or special fastening arrangement must be maintained. The hardware listed is for mounting purposes and is NOT included when the part is ordered for replacement.

Standard attaching hardware torque values are provided on the inside back cover. Unless otherwise specified, all bolts are Grade 5, cadmium or zinc plated; hexagon nuts for Grade 5 bolts are Grade 5.

silverhorn.co.uk

Page

Introduction
Table of Contents 1

Filters
Filters 6

Cab
Standard Cab 8
Front and Rear Window - Enclosed Cab 10
Wipers - Front and Top - Enclosed Cab 12
Top and Left Window - Enclosed Cab 14
Door - Enclosed Cab 16
Instrument Panel and Switches 18
Fuses, Wire Harnesses and Electrical 20
Front and Rear Lights 22
Heater 24
A/C- Heater (Option) 26
A/C Circuit 28
Heater Circuit (A/C Equipped - Option) 30
A/C Condenser 32
Steering Column Components 34
Seat 36
Brake and Accelerator Pedals 38
Brake Valve 40
Mounts 42

Chassis, Covers and Tanks
Hoods and Covers 44
Fuel Tank and Battery 48
Hydraulic Tank 50
Outriggers - Option 52
Outrigger Valve - Option 54

PWP (Personnel Work Platform)
Chassis Components 56
E-Stop Remote — Transmitter and Receiver 58
Radio Remote — Transmitter and Receiver 59

Engine
External Components 60
A/C Compressor and Fan Belt 62
Air Intake 64
Exhaust 66
Radiator and Coolers 68

silverhorn.co.uk

Page

Transmission
External Components and Driveshafts 72
Torque Converter Housing 74
Torque Converter 75
Case 76
Spacer Plate 78
Pump Drive 80
Charge Pump 81
Reverse Idler 82
Clutch Gear - 3rd Gear 83
Forward and Reverse 84
High and Third Gear 86
First and Second Gear 88
Output Shaft 90
Electronic Controllers 91
Drive Plate 92
Modulation Valve 93

Axle
Mounts, Tires and Fenders 94
Front Axle - Brake and Steering Circuit 96
Rear Axle - Brake and Steering Circuit 98
Front and Rear Axle - Steer Cylinder, Central Housing and Trunion 100
Front Axle - Differential 102
Front Axle - Hub Reduction 104
Front Axle - Brakes 106
Rear Axle - Differential 108
Rear Axle - Hub Reduction 110
Rear Axle - Brakes 112

Boom
Outer - Front 114
Outer - Rear 116
Outer Side Cover 117
1st Intermediate - Front 118
1st Intermediate - Rear 120
2nd Intermediate - Front 122
2nd Intermediate - Rear 124
Inner 126
Dynattach® Assembly 128

Boom Hydraulics
Boom Extend / Retract Circuit 130
Tilt Circuit 132
Auxiliary Hydraulics Circuit 134
Slave Cylinder Circuit 136
Boom Lift Circuit 138

silverhorn.co.uk

Page

Chassis Hydraulics
Frame Level 140
Frame Stabilizing 142

Hydraulics
Hydraulic Pump 144
Steering 146
Main Valve 148
Main Valve - Dual Controllers 150
Main Valve - Radio Remote Control Option 152
Dual Controllers 154
Dual Controllers - Auxiliary Hydraulics 156
Dual Controllers - PWP 158
Dual Controllers - PWP and Auxiliary Hydraulics 160
Dual Controllers - Radio Remote 162
Dual Controllers - Radio Remote - w/Auxiliary Hydraulics 164

Hydraulic Cylinders
Frame Level 166
Frame Stabilizing 168
Boom Lift 170
Boom Extend 172
Slave 174
Tilt 176
Outrigger 178
Rotating-Carriage 180
Swing-Carriage 181
Fork-Shift 182
Axle Steer 183

Hydraulic Components
Hydraulic Pump 184
Brake Cylinder with Booster 185
Steer Motor 186
Steer Select Valve 187
Priority Flow Divider Valve 188
Joystick Relief - Flow Divider 189
PWP Manifold 190
Frame Stabilizing Valve 192
Radio Remote Manifold 193
Main Valve 194
Main Valve - Auxiliary Hydraulics Work Section 196
Outrigger Valve 198
Controller - Tilt / Frame Level 200
Controller - Boom Lift/Extend 202
Controller - Auxiliary Hydraulics 204

silverhorn.co.uk

Page

Attachments
Carriage Forks 206
Standard Carriage 208
Fork-Shift Carriage 210
Rotating Carriage 212
90º Swing Carriage 214
180º Swing Carriage 216
180º Swing Platform 218
Log/Pipe Carriage 220
Truss Boom and Winch 222
Bucket 223

Decals
General Information and Application 225
Paint 225
Decal Locations 226

Index
Numerical Index 230
Subject Index 240

silverhorn.co.uk

silverhorn.co.uk

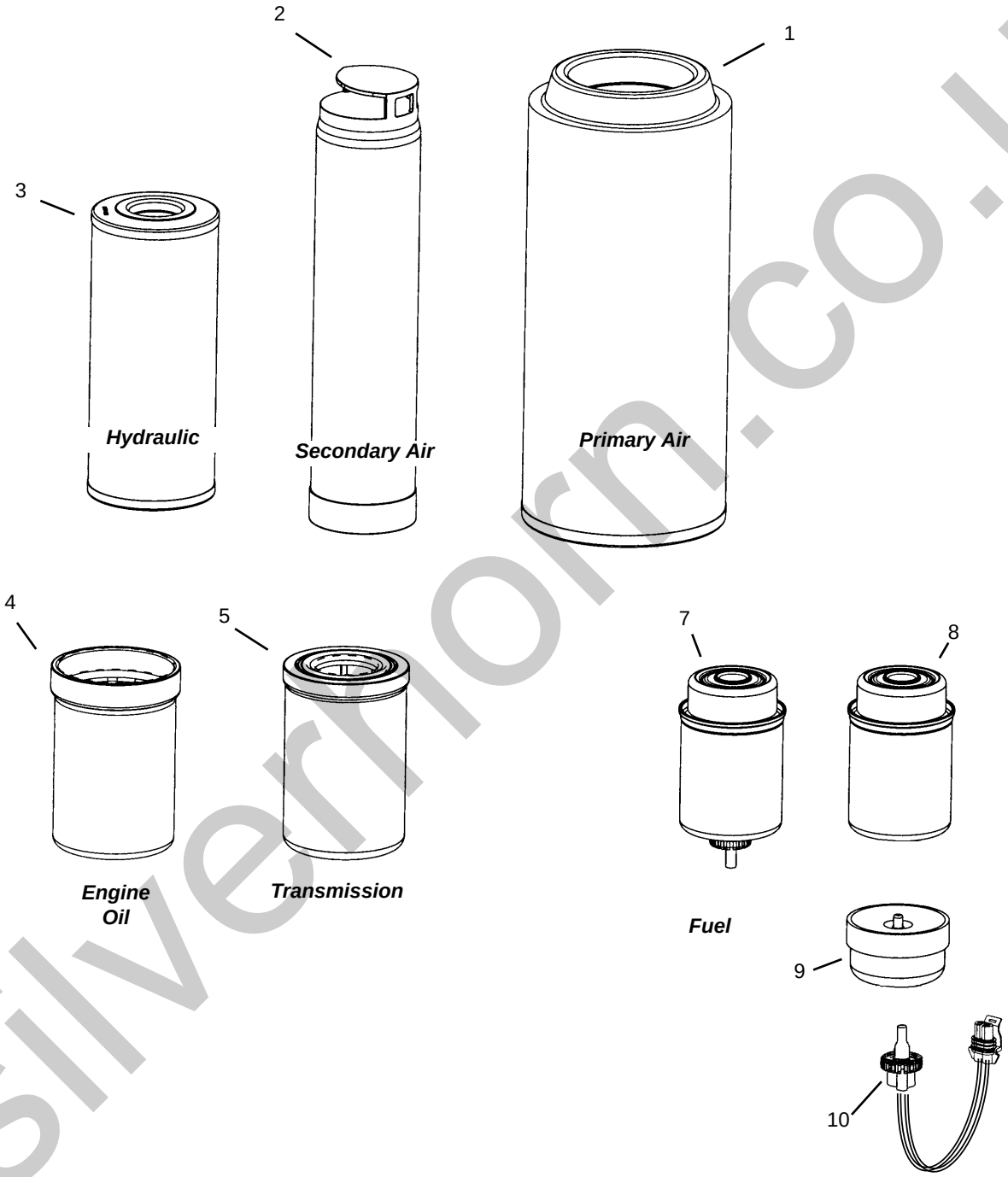

silvermorn.co.uk

Ref. No.	Part No.	Description	Qty. Req.
01	809825	PRIMARY AIR FILTER *(outer)*	1
02	809826	SECONDARY AIR FILTER *(inner)*	1
03	808005	HYDRAULIC FILTER	1
04[a]	808000	ENGINE OIL FILTER	1
05	808004	TRANSMISSION FILTER	1
07	809823	FUEL FILTER *(secondary filter)*	1
08	809824	FUEL FILTER *(primary filter)*	1
09	809827	SEDIMENT BOWL *(does not include water sensor)*	1
10	809828	WATER SENSOR	1
		-- ITEMS NOT SHOWN --	
--[b]	51200000	FILTER, CAB AIR	1

a *Use dust seal P/N 808068 as needed.*

b *When equipped with optional air conditioning.*

silverhorn.co.uk

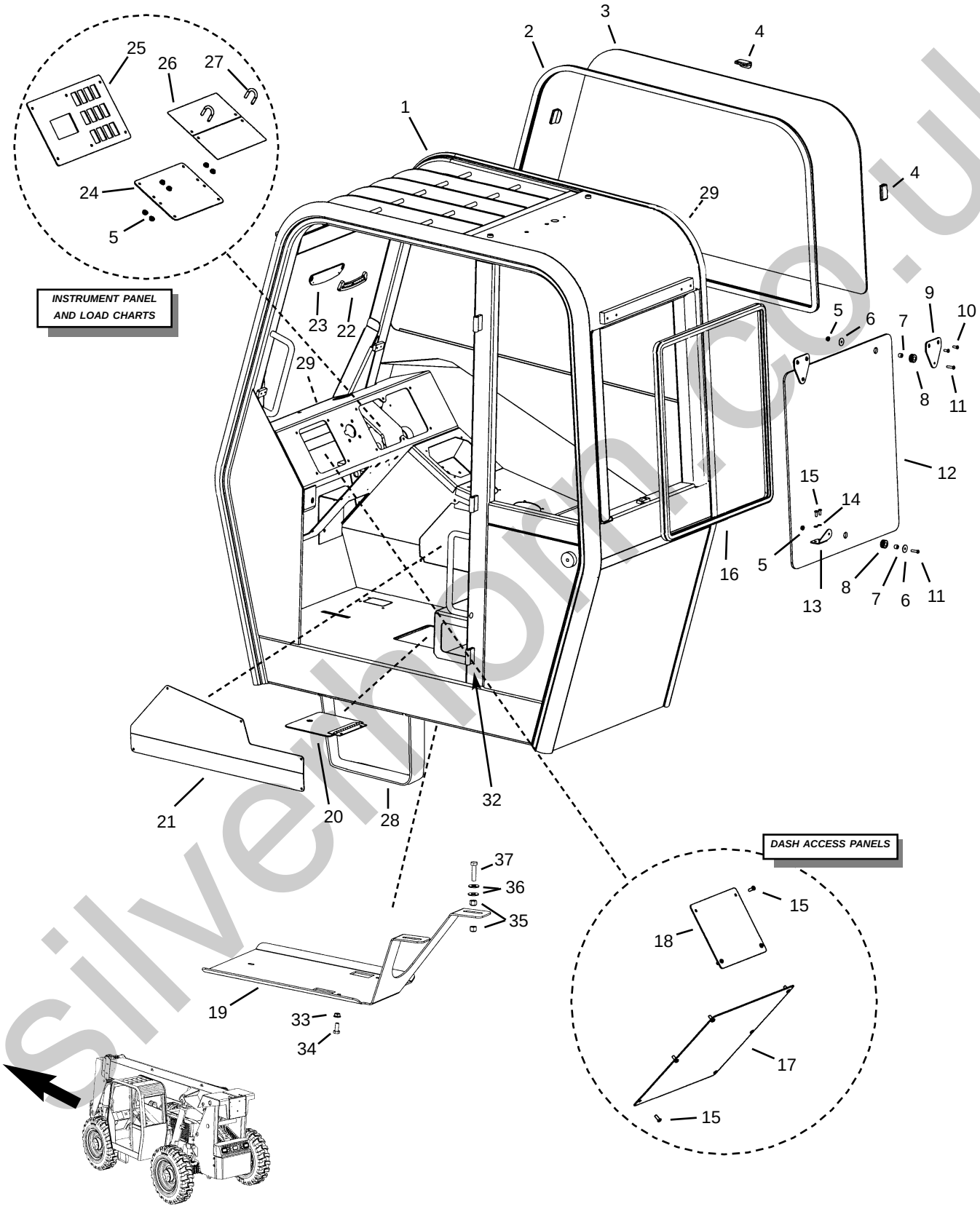

silverthorn.co.uk

Ref. No.	Part No.	Description	Qty. Req.
01	51200003	CAB *(frame work only)*	1
02	808248	BULB SEAL, RIGHT WINDOW	1
03	808241	GLASS, RIGHT HAND	1
	51200004	SCREEN, RIGHT HAND *(option)*	
04	808493	CLIP, WINDOW	3
	808492	SCREW, FLANGE	6
05	808545	1/4”-20 WHIZ LOCK NUT	AR
06	808484	WASHER, FLAT *(black)*	3
07	808482	BUSHING, NYLON	3
08	808483	GROMMET, 1/2”ID X 1/4”GROOVE	3
09	808306	MOUNT, REAR GLASS UPPER	2
10	808667	5/16”-18X3/4” BUTT. HD BOLT	4
11	808666	1/4”-20X1” BUTT. HD BOLT	3
12	808242	GLASS, REAR	1
13	808307	MOUNT, REAR GLASS LOWER	1
14	808589	1/4” LOCK WASHER	2
15	808600	1/4”-20X5/8” BUTT. HD BOLT	AR
16	808249	BULB SEAL, REAR WINDOW	1
17[a]	808258	PANEL, HEATER	1
18[a]	808257	PANEL, DASH COVER	1
19	51200005	SKID PLATE, BOTTOM	1
20	808261	WLDMNT, BRAKE CYL COVER	1
21	808236	COVER, HYD. CONTROLLERS	1
	808090	1/4”-20X3/4” SCREW, PHILP HD.	5
22	808802	INDICATOR/FRAME LEVEL	1
	809177	#8-32X1” SCREW	2
23	808862	PLATE, INCLMT MOUNT	1
	808667	5/16”-18X3/4” BUTT. HD BOLT	4
24	808245	COVER, FUSE PANEL	1
	808090	1/4”-20X3/4” SCREW, PHILP HD.	4
25	*Note b*	PANEL, DASH	1
26[c]	808723	LOAD CHART PLATE *(metal)*	2
	813469	LOAD CHART PLATE *(plastic)*	AR
27	808734	1/4”-20 U-BOLT	1
28	809178	ACCESS STEP *(weld on)*	1
29	809179	GROMMET, 5/8”	AR
32	51200006	HINGE TUBE *(weld on)* *(when equipped with door option)*	3
33	808555	5/16” FLANGE LOCK NUT	2
34	808498	5/16”X3/4” BOLT	2
35	808663	3/8” NYLON LOCK NUT	4
36	813591	3/8” FLAT WASHER	4
37	813697	3/8”X1-1/2” BOLT	2
		-- ITEMS NOT SHOWN--	
--	51200007	PLUG, BLACK 5/8”	AR
--[a]	808733	HOLE PLUG, 2-1/2” DIA *(defroster hole in dash)*	1
--	808672	TREAD STRIP, 6” WIDE	4 feet

a *Used when not equipped with a heater.*

b *Refer to “Instrument Panel and Switches” section for information regarding switches and gauges.*

c *Refer to decal section for load chart decals.*

silverhorn.co.uk

Front and Rear Window - Enclosed Cab

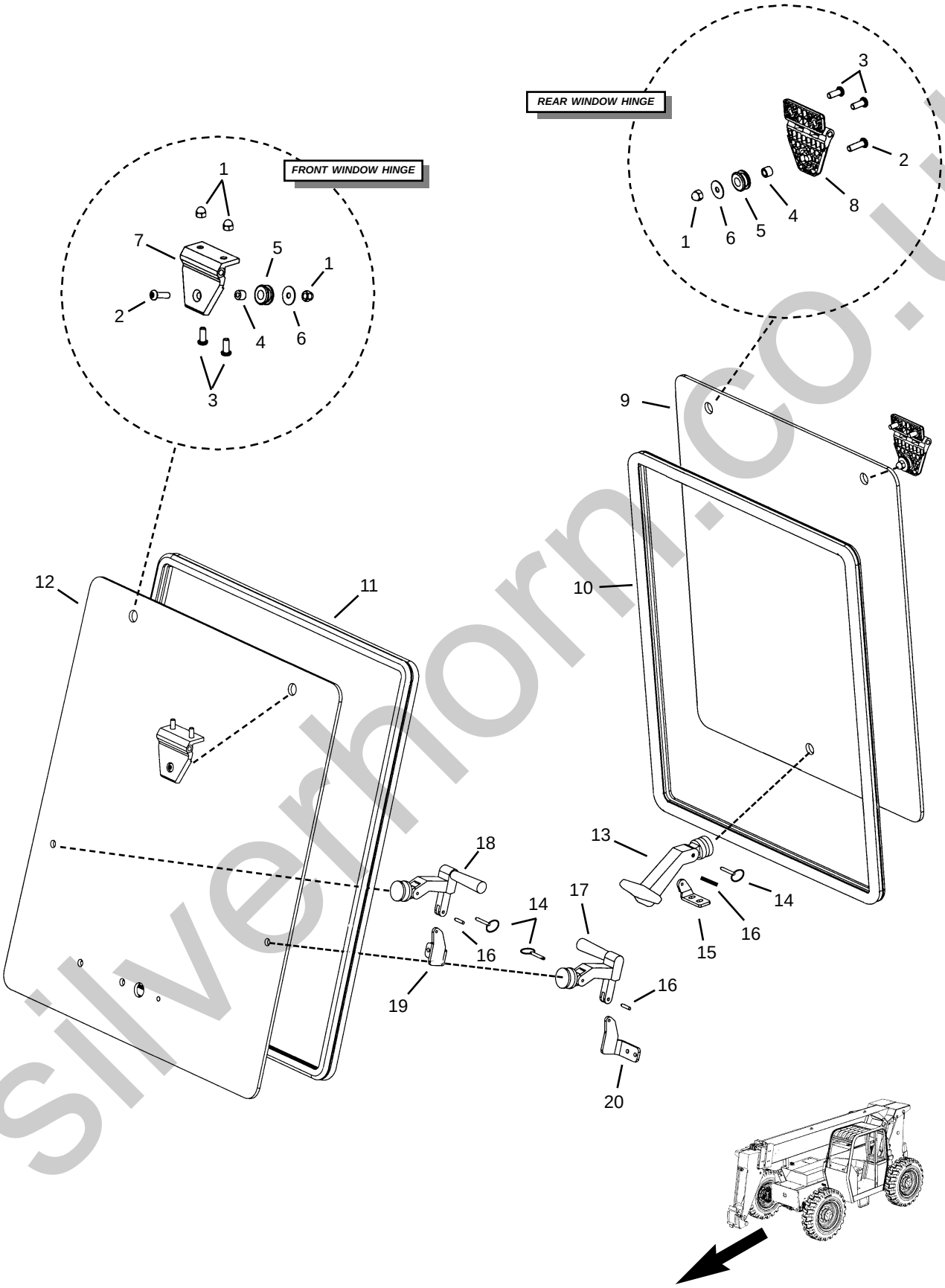

silverhorn.co.uk

Front and Rear Window - Enclosed Cab

Ref. No.	Part No.	Description	Qty. Req.
01	808490	5/16”-18 ACORN NUT	AR
02	808420	5/16”-18X1” BUTTN HD BOLT	4
03	808421	5/16”-18X3/4” BUTTN HD BOLT	8
04	808491	BUSHING, STEEL	4
05	808483	GROMMET, 1/2”IDX1/4”GROOVE	6
06	808422	5/16” FLAT WASHER (BLACK)	4
07	808495	HINGE, FRONT WINDOW	2
08	808485	HINGE, PLASTIC *(rear window)*	1
09	808242	GLASS, REAR	1
10	808249	BULB SEAL, REAR GLASS	1
11	808247	BULB SEAL, FRONT GLASS	1
12	808240	GLASS, FRONT	1
13	808095	HOLD-OPEN, T-STYLE	1
14	808486	PIN, QUICK DETACH	4
15	51200008	MOUNT, REAR WINDOW LATCH	1
16	808481	PIN, ROLL - 3/16”x1/2”	3
17	808488	HOLD OPEN, L-STYLE	1
18	808487	HOLD OPEN, L-STYLE	1
19	51200010	MOUNT, HOLD-OPEN *(right)*	1
20	51200009	MOUNT, HOLD-OPEN *(left)*	1

-- ITEMS NOT SHOWN --

(Hardware for window hold open brackets)

--	809180	1/4” FLAT WASHER	AR
--	809181	1/4” LOCK WASHER	AR
--	808600	1/4”-20X5/8” BUTTN HD BOLT	AR

silverhorn.co.uk

Wipers - Front and Top - Enclosed Cab

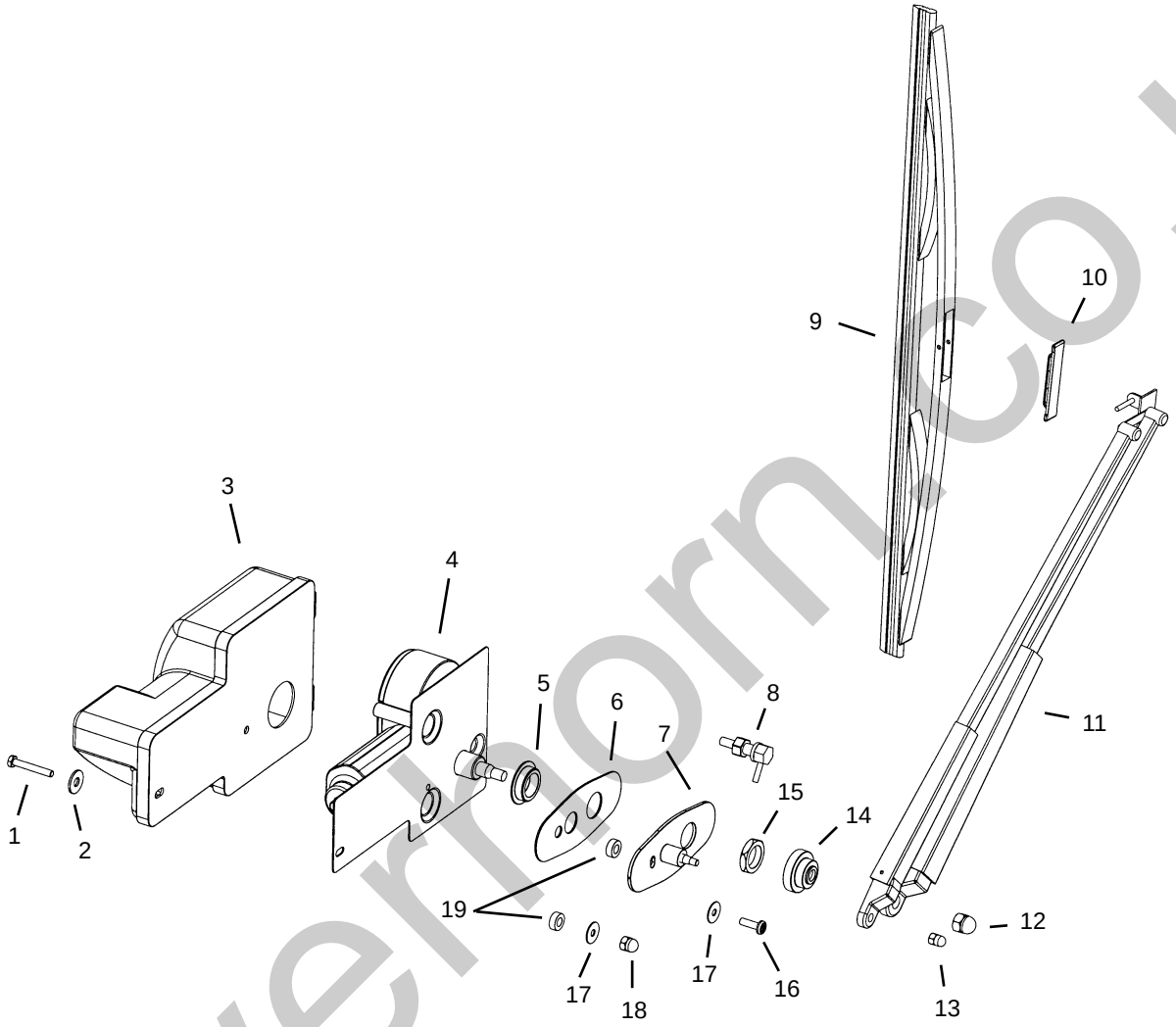

silverthorn.co.uk

Wipers - Front and Top - Enclosed Cab

Ref. No.	Part No.	Description	Qty. Req.
Note: unless otherwise indicated, all parts are used on both front and top glass.			
01	808573	BOLT / 10-24x1.25 HEX GR5	1
02	808479	WASHER/BLK NYLON	1
03	808562	COVER WIPER MOTOR	1
04	808561	WIPER MOTOR / TRICO	1
05[c]	808570	TOWER SEAL / TRICO WIPER	1
06	808565	GASKET / PANTO ADAPTER	1
07	808574	PANTO ADAPTER PLATE	1
08	808494	ADAPTER/WET ARM	1
09	808320	WIPER BLADE , 16”	1
10	808569	ADAPTER / PIN LOCK	1
11		WIPER ARM	1
	808566	*Note a*	
	808319	*Note b*	
12	808564	M8 / ACORN NUT	1
13	808568	M5 / ACORN NUT	1
14	808571	RAIN SHIELD	1
15	808563	M18 / NUT	1
16	808572	SCREW / M5 16mm	1
17	808093	WASHER, #10 WEATHERTITE	2
18	808480	NUT/ACORN #10-24 BLK	1
19[c]	808560	BUSHING / NYLON	AR
20	808089	BOTTLE, DUAL -PUMP WASHER	1
		-- ITEMS NOT SHOWN --	
		(Windshield Wiper Harness)	
--	809182	HARNESS, TOP WIPER	1
--	809183	HARNESS, FRONT WIPER	1
		(Windshield Washer System)	
--	808321	HARNESS, WASHER BOTTLE	1
--	808347	TUBING, WASHER (*15-1/2’*)	1

a *Used for front window*
b *Used for top window*
c *Not used with all machines.*

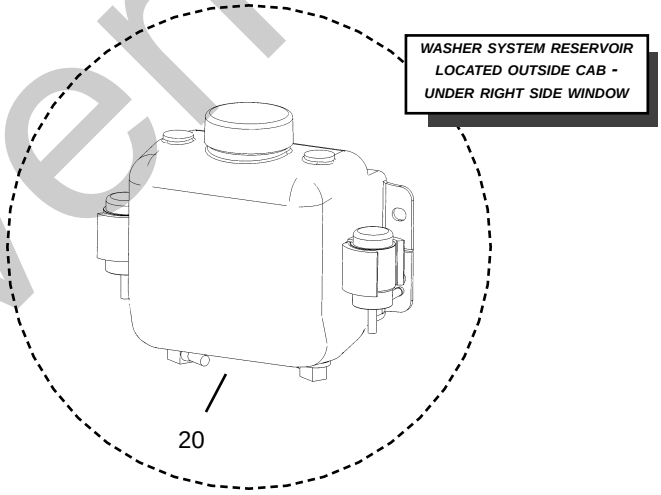

silverhorn.co.uk

Top and Left Window - Enclosed Cab

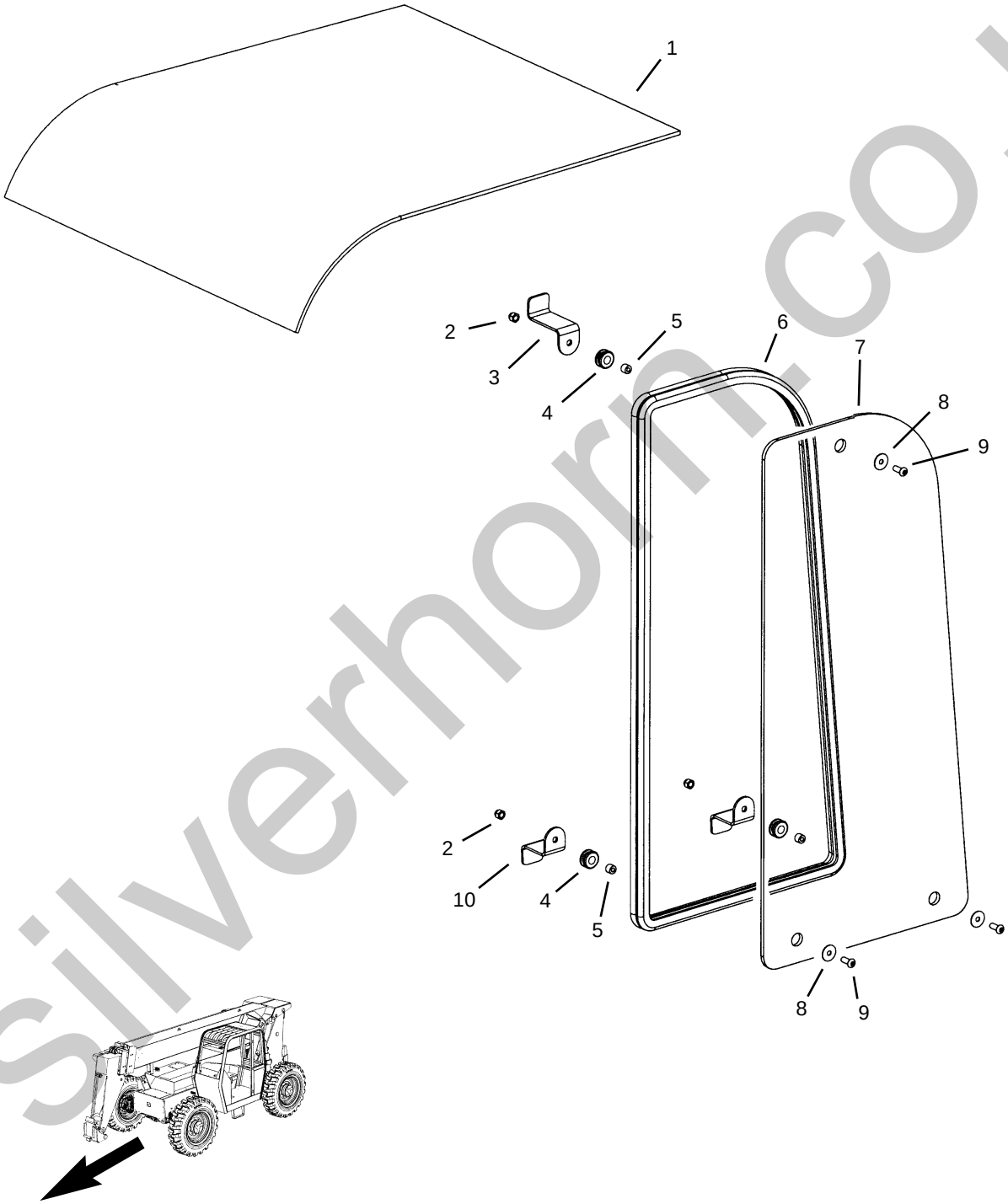

silverhorn.co.uk

Top and Left Window - Enclosed Cab

Ref. No.	Part No.	Description	Qty. Req.
01[a]	808244	GLASS, TOP	1
02	808490	5/16”-18 ACORN NUT	AR
03	808252	WINDOW MOUNT, UPPER	1
04	808483	GROMMET, 1/2”IDX1/4”GROOVE	3
05	808491	BUSHING, STEEL	4
06	808250	BULB SEAL, LEFT GLASS	1
07	808243	GLASS, LEFT REAR	1
08	808422	5/16” FLAT WASHER (BLACK)	4
09	808420	5/16”-18X1” BUTTN HD BOLT	4
10	808253	WINDOW MOUNT, LOWER	2
		-- ITEMS NOT SHOWN --	
--[b]	51200011	TOP GLASS FILLER	1

a *Use P/N 808934 adhesive kit to attach top glass to cab.*

b *Used to reduce gap between cab and top glass at front top of the cab; use adhesive 808934 to secure to cab and seal top glass.*

silverhorn.co.uk

Door - Enclosed Cab

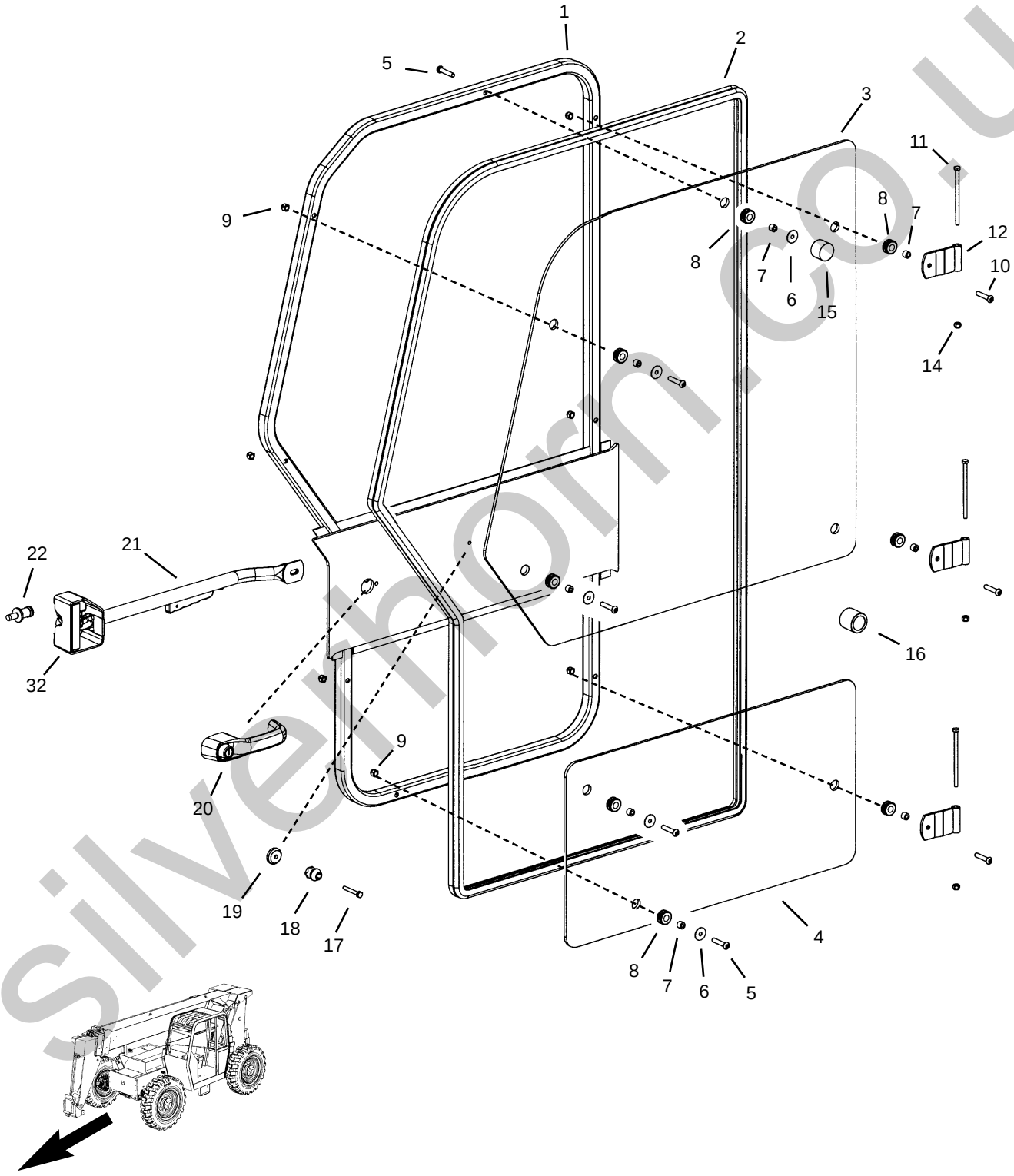

silverthorn.co.uk

Door - Enclosed Cab

Ref. No.	Part No.	Description	Qty. Req.
--	808348	CAB DOOR	1
		(includes items 1-10, 12 and 15)	
01	808303	WELDMENT, CAB DOOR FRAME	1
02	808246	BULB SEAL, DOOR FRAME	1
03	808238	GLASS, UPPER DOOR	1
04	808239	GLASS, LOWER DOOR	1
05	808419	5/16”-18X1-13/4” BUTTN HD BOLT	5
06	808422	5/16” FLAT WASHER (BLACK)	5
07	808491	BUSHING, STEEL	8
08	808483	GROMMET, 1/2”IDX1/4”GROOVE	8
09	808490	5/16”-18 ACORN NUT (BLACK)	8
10	809184	5/16”-18X2” BUTTN HD BOLT	3
11	51200012	3/8”-16X5” BOLT	3
12	808317	WELDMENT, DOOR HINGE	3
14	813656	3/8”-16 NYLON INSERT NUT	3
15	808323	BUMPER, DOOR	1
16	808489	HOLD OPEN/DOOR (SET)	1
		(includes item #18) [mounts to cab]	
17	808413	1/4”-20x1-1/2” BOLT	1
18	NSS	HOLD OPEN/DOOR STUD	1
		(included with item #16 as a set)	
19	808094	GLASS MOUNT	1
20	808327	HANDLE, EXT. DOOR LOCKING	1
	808097	KEY ONLY	1
21	808310	LATCH RELEASE, INTERIOR	1
	809185	1/4-20X1-1/4” FLAT HD SCREW	2
	808600	1/4-20X5/8” BUTTN HD BOLT	1
	809186	M6-1X12 8.8 BOLT	2
	808484	FLAT WASHER (BLACK)	1
	808661	1/4”-20 NYLON INSERT NUT	2
	808891	1/2” HOLE PLUG	2
22	808086	STRIKER	1
	809187	7/16” LOCK WASHER	1
	809188	7/16” FLAT WASHER	1
	51200013	7/16”-14 NUT	1
32	813433	COVER *(included with item #21)*	1

silverhorn.co.uk

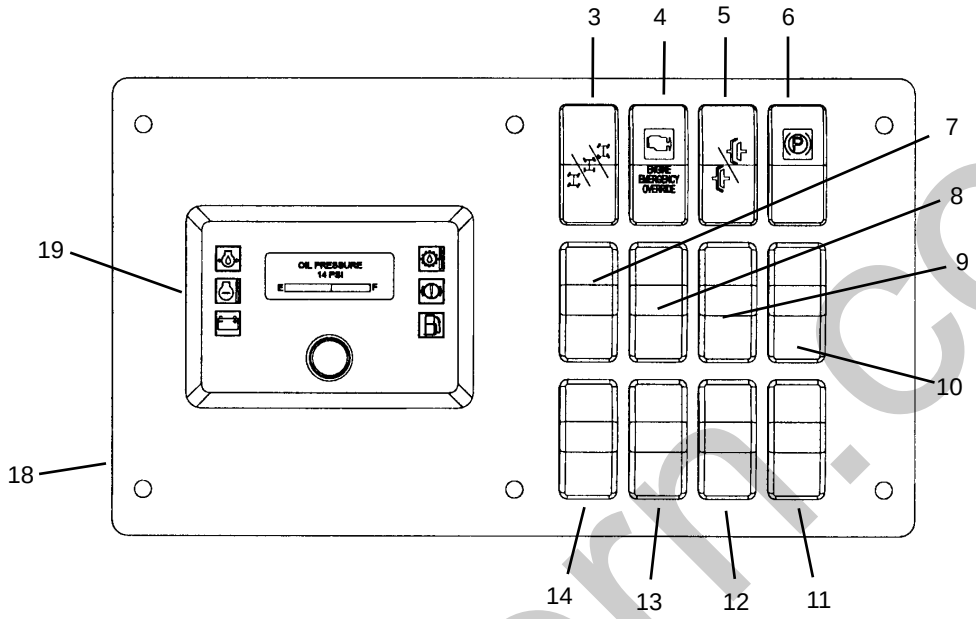

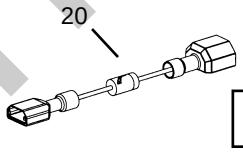

Diode Wire
51200015

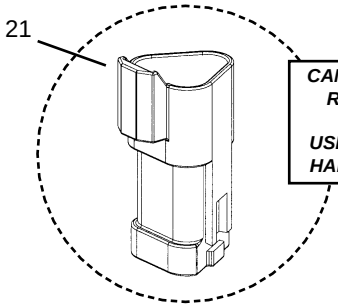

CAN / TERMINATE RECEPTACLE

USED WITH WIRE HARNESS 813466

silverhorn.co.uk

Ref. No.	Part No.	Description	Qty. Req.
03	808922	SWITCH, STEER MODE	1
04	808083	SWITCH, ENGINE FAULT	1
05	808928	SWITCH, CLUTCH CUT-OUT	1
06	808921	SWITCH, PARK BRAKE	1
07	808926	SWITCH, LIGHTS	1
08	808927	SWITCH, TURN SIGNALS	1
09	808924	SWITCH, HAZARD LIGHTS	1
10	808938	SWITCH, PWP	1
11	813379	SWITCH, STROBE LIGHT	1
12	808925	SWITCH, ETHER	1
13	808923	SWITCH, WIPER/WASHER	1
14	808923	SWITCH, WIPER/WASHER	1
18	51200014	PANEL, DASH *(Switches and gauges not included.)*	1
19	813446	DISPLAY, CAN & INSTRUMENTS	1
20	51200015	DIODE WIRE *(under dash; attaches to park brake switch - clutch cut-out side)*	1
21	813465	CAN / TERMINATE RECEPTACLE *(included with wire harness 813466)*	1

Note: *Use P/N 809694 Switch Hole Plug to cover switch hole when switches are not present.*

silverhorn.co.uk

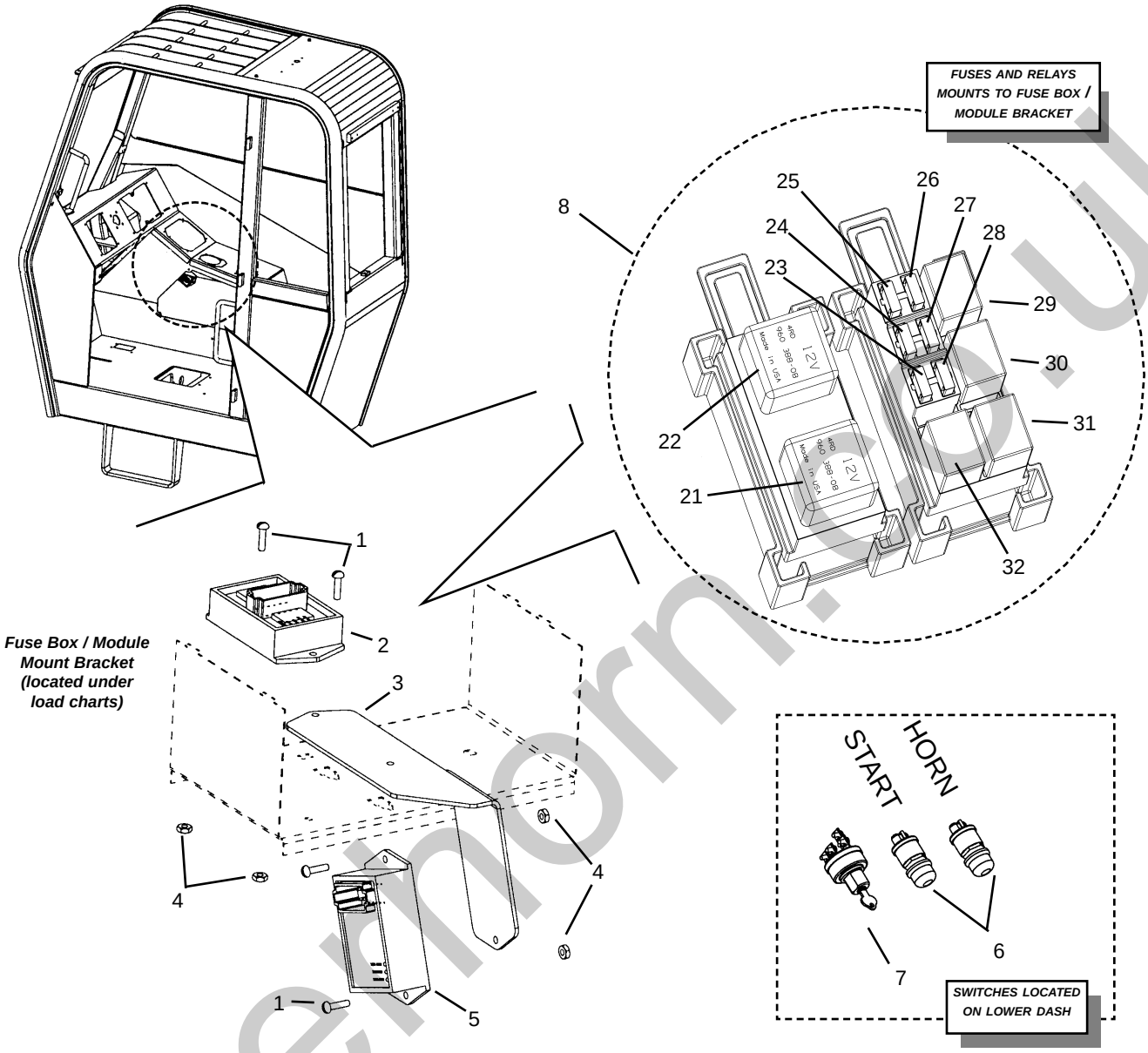

FUSE AND RELAY REFERENCE	
21	(Relay #2) - Change-over relay - IGNITION
22	(Relay #1) - Change-over relay - IGNITION
23	(Fuse #2) - 20 AMP fuse - (IGNITION) - transmission, park brake, PWP, steer select, backup alarm
24	(Fuse #4) - 25 AMP fuse - (IGNITION) - heater, gauges
25	(Fuse #6) - 25 AMP fuse - (IGNITION) - front wiper motor
26	(Fuse #5) - 25 AMP fuse - (IGNITION) - top wiper motor
27	(Fuse #3) - 15 AMP fuse - (IGNITION) - lights, ether
28	(Fuse #1) - 15 AMP fuse - (BATTERY) - ignition switch, horn, brake lights, clutch cut-out
29	(Relay) - 20 AMP micro relay - top wiper
30	(Relay) - 20 AMP micro relay - lights
31	(Relay) - 20 AMP micro relay - park brake
32	(Relay) - 20 AMP micro relay - front wiper

silverthorn.co.uk

Fuses, Wire Harnesses and Electrical

Ref. No.	Part No.	Description	Qty. Req.
01	808624	#8-32X5/8" SCREW	4
02	808099	MODULE, F-N-R SHIFTER	1
03	51200016	BRACKET, BRAKE MODULE	1
04	51200017	#8-32 NUT	4
05	51200018	MODULE, BRAKE WARNING	1
06	808438	SWITCH, PUSH BUTTON	2
07	808073	SWITCH, IGNITION *(with keys)*	1
	808074	KEYS ONLY (pair)	1
08[a]	51200021	FUSE BOX / CANOPY HARNESS	1
	808498	5/16"X3/4" BOLT	1
	808555	5/16" NUT	1
21	808892	CHANGE OVER RELAY	1
22	808892	CHANGE OVER RELAY	1
23	51200022	FUSE, MINI 20 AMP	1
24	809190	FUSE, MINI 25 AMP	1
25	809190	FUSE, MINI 25 AMP	1
26	809190	FUSE, MINI 25 AMP	1
27	808394	FUSE, MINI 15 AMP	1
28	808394	FUSE, MINI 15 AMP	1
29	808395	MICRO RELAY, 20 AMP	1
30	808395	MICRO RELAY, 20 AMP	1
31	808395	MICRO RELAY, 20 AMP	1
32	808395	MICRO RELAY, 20 AMP	1
34	808808	DIODE PACK, 4 DIODES *(part of frame wire harness)*	1
35	813465	CAN / TERMINATE RECEPTACLE. *(included with wire harness 813466)*	1

Ref. No.	Part No.	Description	Qty. Req.
		--ITEMS NOT SHOWN --	
		(Wire Harness)	
--	813466	ECU INTERFACE HARNESS	1
	813465	CAN / TERMINATE RECEPTACLE.	1
--	51200023	ELECT. THROTTLE HARNESS	1
--[a]	51200021	CANOPY HARNESS	1
	51200015	DIODE WIRE *(under dash; attaches to park brake switch - clutch cut-out side)*	1
--	51200026	FRAME HARNESS	1
	808808	DIODE PACK, 4 DIODES *(located in front of transmission)*	1
	808500	60 AMP MAXI FUSE *(located near engine starter)*	1
	51200015	DIODE WIRE *(attaches to alternator)*	1
		(Miscellaneous)	
--	808735	TURN SIGNAL FLASHER *(located inside joystick access cover)*	1
--	808437	HORN	1
--	808707	GROUND STRAP	1
		(Strobe light - Option)	
--	813374	STROBE / AMBER	1
--	51200027	HARNESS/ STROBE UPPER	1
--	51200028	HARNESS/ STROBE DASH	1
--	813379	SWITCH/ STROBE LIGHT *(located in position #11 on dash)*	1

a *Includes canopy harness and fuse box housing, does not include fuses or relays; the fuse box housing is not available separately.*

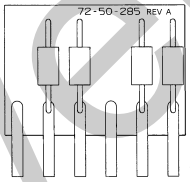

34

808808
DIODE PACK - FRAME HARNESS - LOCATED NEAR TRANSMISSION

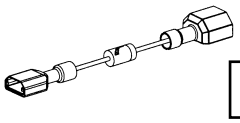

Diode Wire 51200015

35

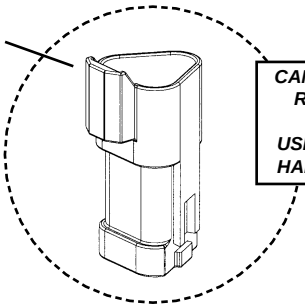

CAN / TERMINATE RECEPTACLE

USED WITH WIRE HARNESS 813466

silverhorn.co.uk

Front and Rear Lights

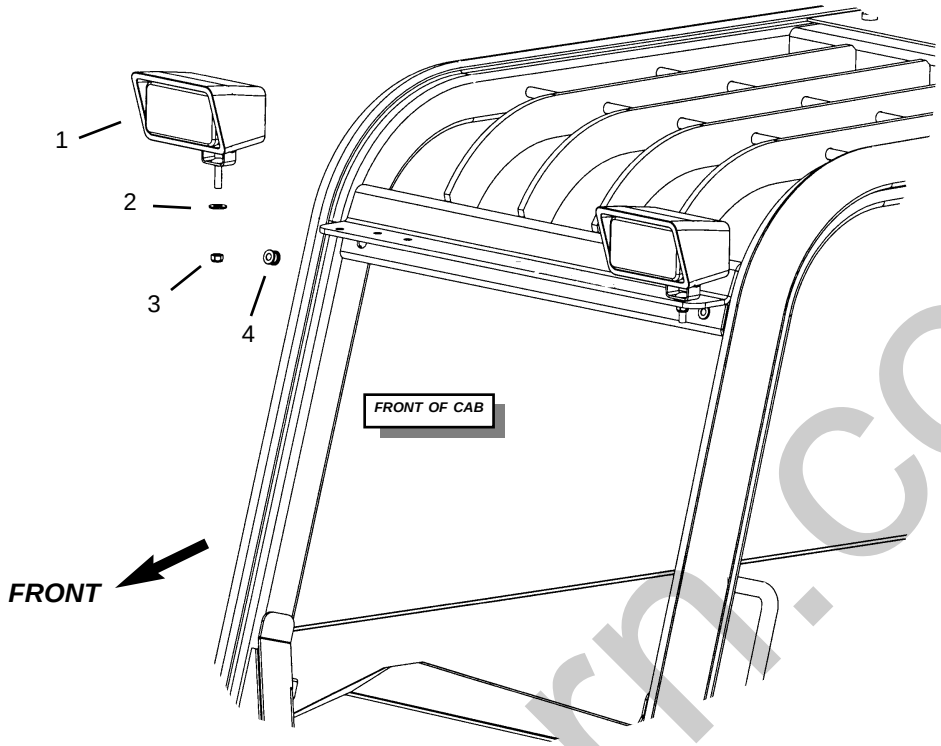

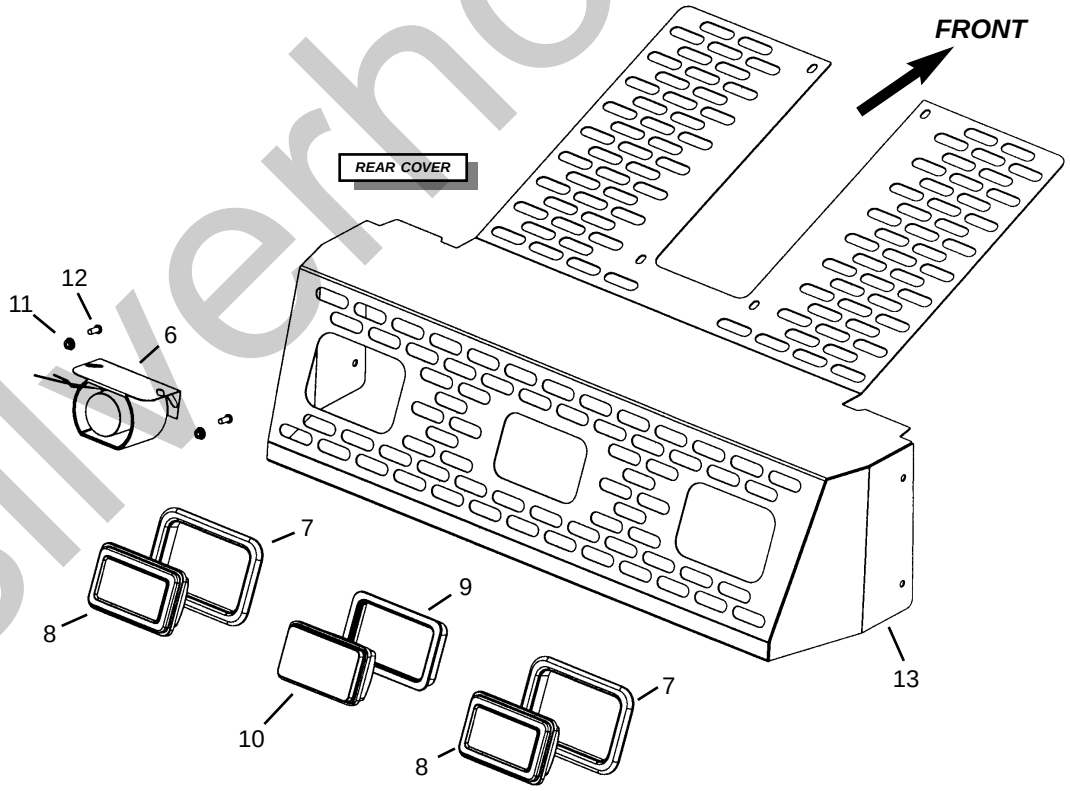

silverhorn.co.uk

Ref. No.	Part No.	Description	Qty. Req.
01	808889	HEAD LIGHT	2
02	813591	3/8” FLAT WASHER	2
03	808663	3/8”-16 NYLON INSERT NUT	2
04	808341	GROMMET, 5/8”	2
06	808897	BACKUP ALARM	1
	808600	1/4”-20X5/8” BOLT, BTNHEAD	2
	808545	1/4”-20 FLANGE NUT	2
07	808505	BEZEL, RUBBER *(included with item 8)*	2
08	808919	LIGHT, BRAKE/TURN *(includes item 7 bezel)*	2
09	808558	BEZEL, RUBBER *(included with item 10)*	1
10	808936	LIGHT, HALOGEN BACKUP *(includes item 9 bezel)*	1
	808078	JUMPER WIRE, BACKUP LIGHT	1
11	808600	1/4”X5/8” BTN HD BOLT	2
12	808545	1/4”-20 FLANGE NUT	2
13	51200029	REAR COVER	1

Ref. No.	Part No.	Description	Qty. Req.
		-- ITEMS NOT SHOWN --	
--a	808232	WIRE HARNESS, REAR LIGHTS	1
--b	808166	HARNESS, LIGHT PACKAGE *(dash to rear lights - includes the following diodes:)*	1
	808396	DIODE PACK *(see below)*	1
	808535	DIODE PACK *(see below)*	1
	808576	CLEAR COVER, DIODE PACK *(see below)*	2
	813373	IN-LINE DIODE *(see below)* *(located between diode pack and back-up alarm connection)*	2
--	808735	TURN SIGNAL FLASHER *(located under dash through joystick access cover)*	1
--	808901	HARNESS, HEAD LIGHT *(dash to head lights)*	2
--	808344	GROMMET, 13/16” *(under dash for head light harness)*	2

a *Standard wire harness, used when not equipped with turn signals.*

b *Used with optional light package for units equipped with turn signals. Wire harness 808232 is not used when unit is equipped with turn signals.*

NOTE: *Refer to the Outer Boom - Front Section for the work lights and wire harness associated with the boom.*

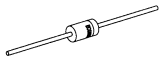

In-line Diode 813373

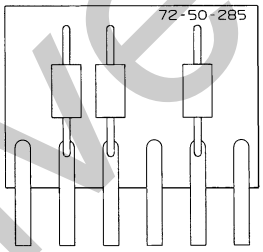

808396
DIODE PACK
LOCATED NEAR
REAR LIGHTS

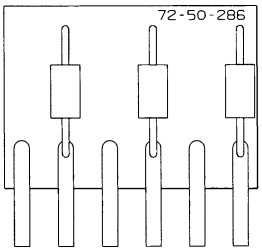

808535
DIODE PACK
LOCATED UNDER DASH
NEAR SWITCHES

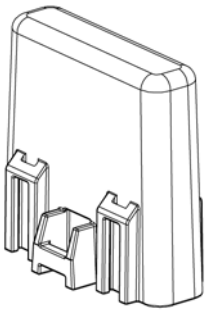

808576
DIODE PACK
CLEAR COVER

silverhorn.co.uk

Heater - (Option) - (No A/C)

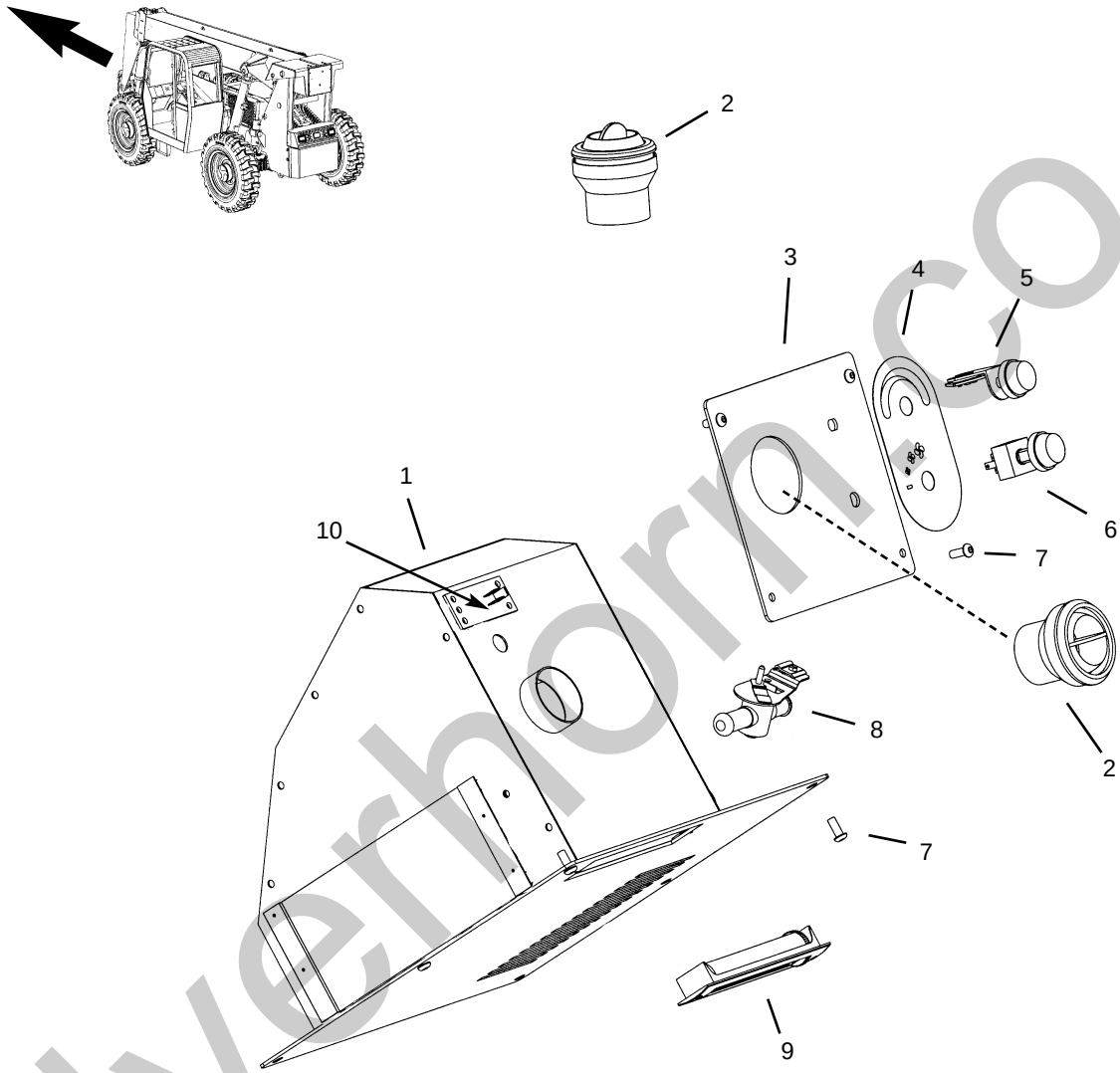

silverhorn.co.uk

Heater - (Option) - (No A/C)

Ref. No.	Part No.	Description	Qty. Req.
01	808318	HEATER ASSEMBLY	1
		(Includes items 5, 6, 8, 9 and 10)	
	808351	BLOWER MOTOR *(only)*	1
02	51200030	GRILL, DEFROSTER	2
03	808324	PANEL	1
04	808325	DECAL, HEAT CONTROL	1
05	808352	CONTROL, TEMPERATURE	1
	809165	KNOB *(only)*	1
06	808411	SWITCH, VARIABLE SPEED	1
07	808600	1/4”-20X5/8” BUTTN HD BOLT	10
08	808496	VALVE, WATER	1
09	808412	LOUVER	1
10	51200031	RESISTOR BLOCK	1
		-- ITEMS NOT SHOWN--	
--	NSS	5/8” HEATER HOSE *(10’)*	1
--	809193	HEATER HOSE CLAMP	AR

silverhorn.co.uk

A/C - Heater - (Option)

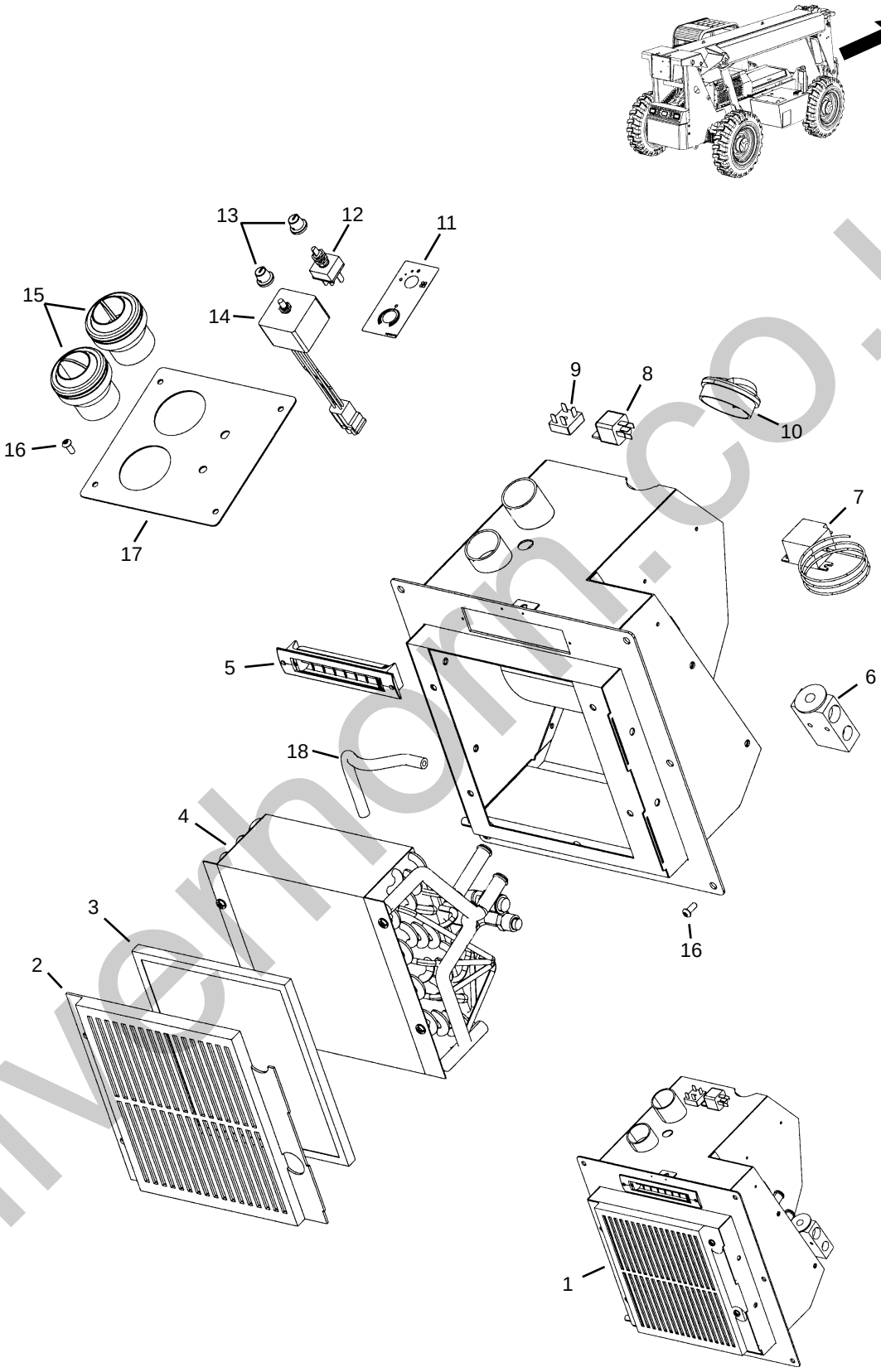

silvernorm.co.uk

A/C - Heater - (Option)

Ref. No.	Part No.	Description	Qty. Req.
01	51200032	HVAC ASSEMBLY	1
		(Includes items 2-9)	
	51200033	FAN ASSEMBLY *(only)*	1
02	51200034	FILTER COVER	1
03	51200000	FILTER, CAB AIR	1
04	51200035	EVAPORATOR/HEATER COIL	1
05	808412	LOUVER	1
06	51200045	EXPANSION VALVE	1
07	51200036	COLD CONTROL SWITCH	1
08	51200037	RELAY	1
09	51200038	RECTIFIER PACK	1
10	51200039	LOUVER	1
11	51200040	DECAL, A/C HEATER CONTROL	1
12	808411	SWITCH, VARIABLE SPEED	1
13	51200041	KNOB	2
14	51200042	MODULE, A/C CONTROL	1
15	51200030	GRILL, VENT	2
16	808600	1/4”-20X5/8” BUTTN HD BOLT	10
17	51200043	PANEL, HVAC CONTROL	1
18	51200044	HOSE, OVERFLOW	1

silverhorn.co.uk

A/C Circuit

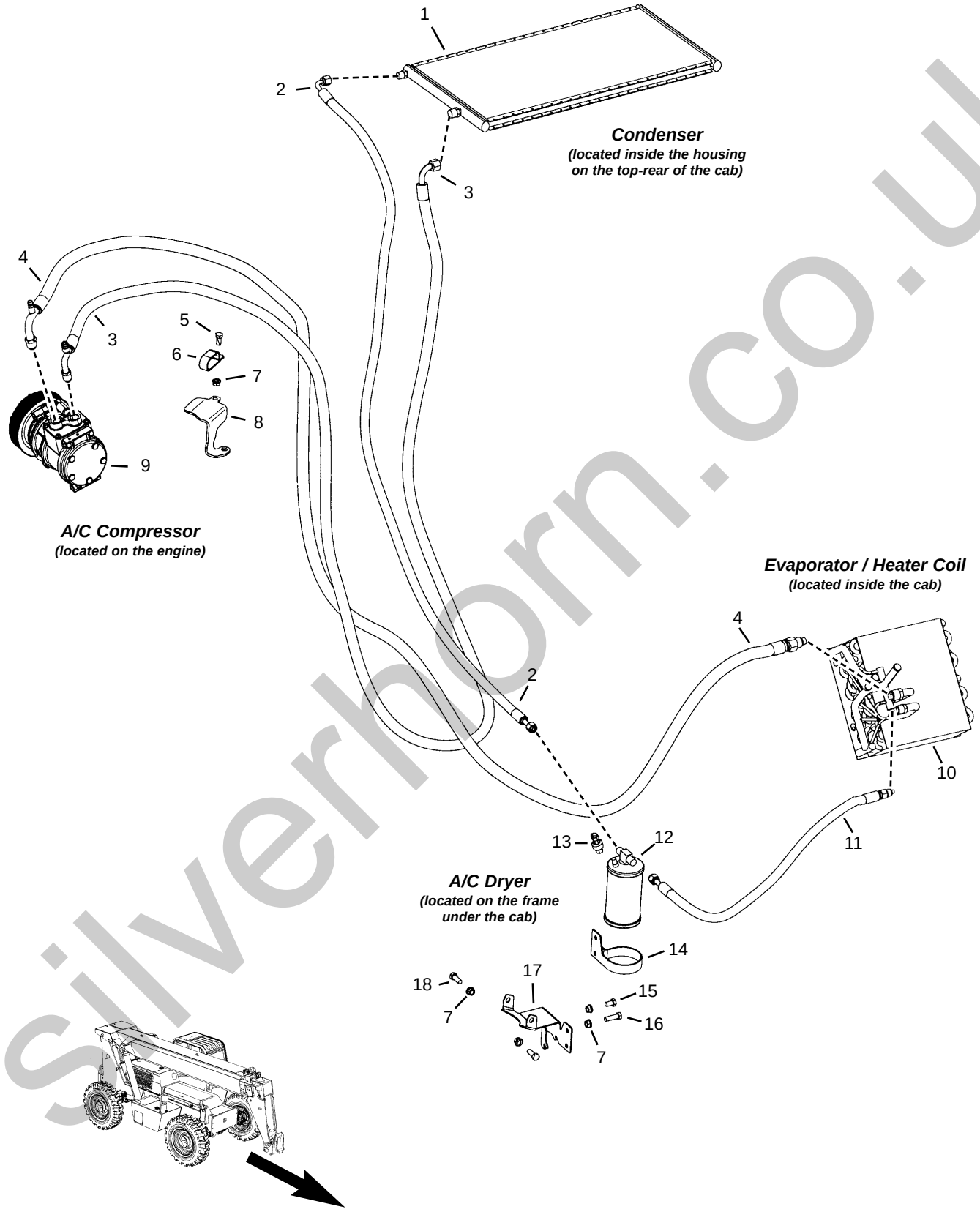

silverhorn.co.uk

Ref. No.	Part No.	Description	Qty. Req.
01	813516	CONDENSER	1
02	51200046	HOSE, #6 COND./DRYER	1
	51200047	O-RING	2
03	51200048	HOSE, #8 COND./COMP.	1
	51200049	O-RING	2
04	51200050	HOSE, #10 COMP./EVAP.	1
	51200051	O-RING	2
05	813677	CS 3/8 x 3/4 C5ZY	1
06	51200052	CLAMP, HOSE 1.00 x 0.41 DBL.	1
07	51200053	LN FL SERR 3/8 CZY	5
08	51200054	SUPPORT, A/C HOSES	1
09	813534	A/C COMPRESSOR	1
10	51200035	EVAPORATOR/HEATER COIL	1
11	51200055	HOSE, #6 DRYER/EVAP.	1
	51200047	O-RING	2
12	51200056	A/C DRYER	1
13	51200057	SWITCH, BINARY	1
14	51200058	CLAMP, DRYER	1
15	51200059	CS 3/8 x 5/8 C5ZY	1
16	813713	CS 3/8 x 1-1/4 C5ZY	1
17	51200060	MOUNT, DRYER / VALVE	1
18	813574	CS 3/8 x 1 C5ZY	2
		-- ITEMS NOT SHOWN --	
--	51200061	WIRE HARNESS, A/C	1

silverhorn.co.uk

Heater Circuit (A/C Equipped - Option)

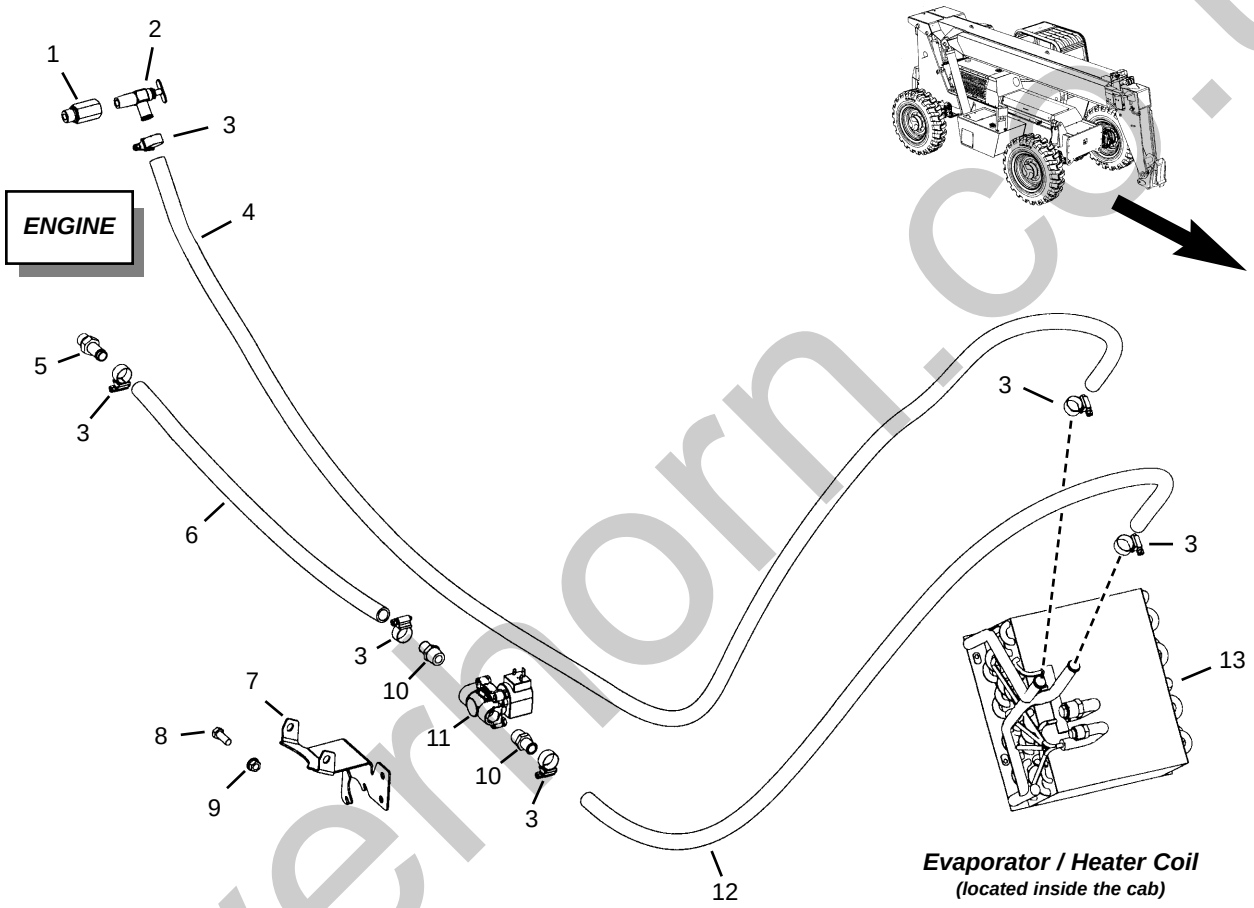

silverhorn.co.uk

Heater Circuit (A/C Equipped - Option)

Ref. No.	Part No.	Description	Qty. Req.
01	51200062	ST-LL FP06-ISO6149-18	1
02	808844	SHUT-OFF, MANUAL	1
03	51200063	CLAMP, HOSE #10	6
04	51200064	HOSE, HEATER 5/8” x 108”	1
05	808465	ST HB10-ISO6149-18	1
06	51200065	HOSE, HEATER 5/8” x 36”	1
07	51200060	MOUNT, DRYER / VALVE	1
08	813574	CS 3/8 x 1 C5ZY	2
09	51200053	LN FL SERR 3/8 CZY	5
10	51200066	ST 1/2MPT x 5/8” HOSE	2
11	51200067	HEATER-A/C SOLENOID	1
12	51200068	HOSE, HEATER 5/8” x 60”	1
13	51200035	EVAPORATOR/HEATER COIL	1

silverhorn.co.uk

A/C Condenser

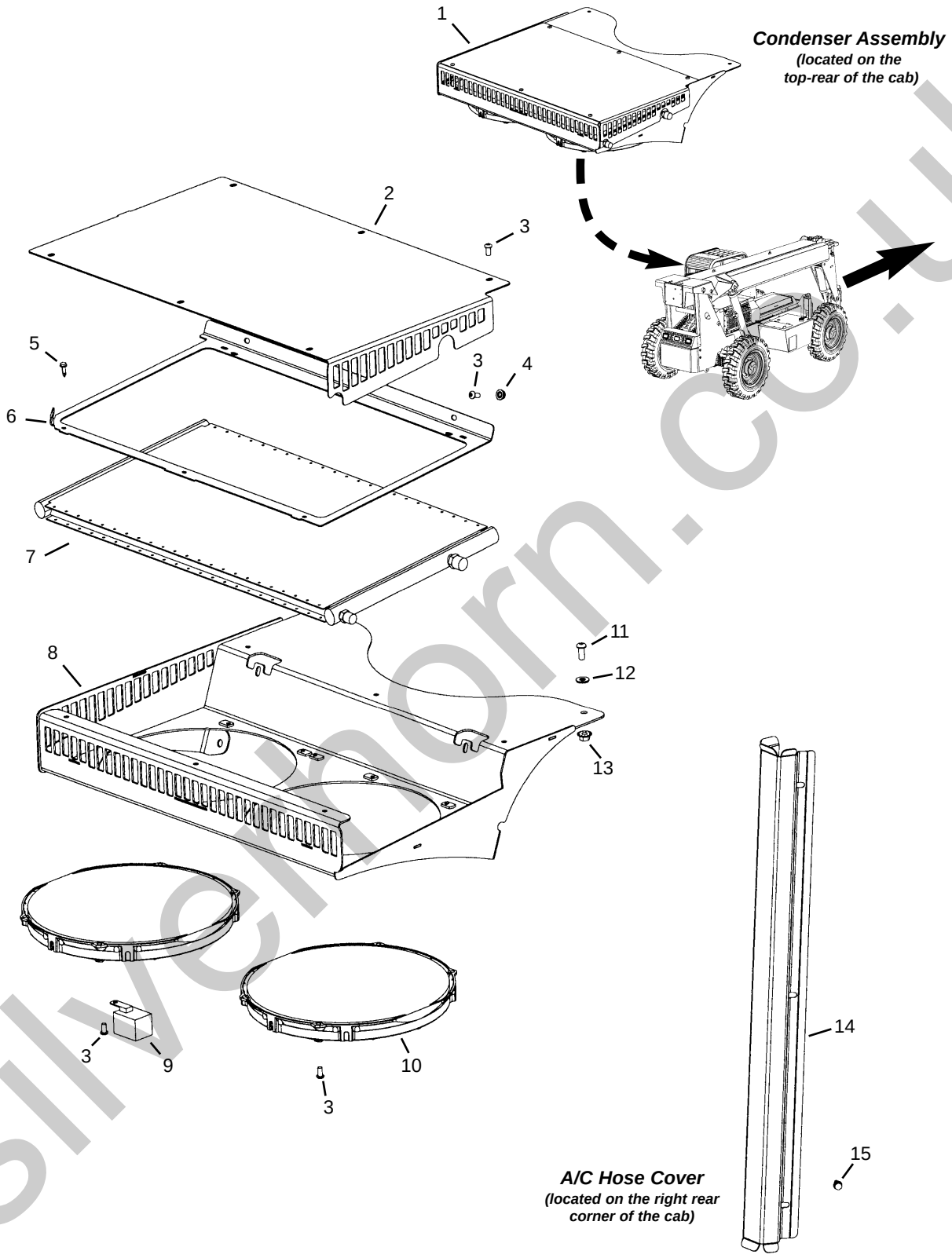

silvernorn.co.uk

A/C Condenser

Ref. No.	Part No.	Description	Qty. Req.
01	51200069	CONDENSER ASSEMBLY	1
		(includes items 1-10)	
02	51200070	COVER, CONDENSER HOUSING	1
03	51200071	BHSCS 1/4” x 1/2”	17
04	808545	FLANGE LN 1/4”-20	2
05	813517	SELF-TAP SCREW 3/16” x 5/8”	6
06	51200072	MOUNT, CONDENSER COIL	1
07	813516	CONDENSER COIL	1
08	51200073	CONDENSER HOUSING	1
09	51200074	RELAY	1
10	813514	CONDENSER FAN ASSEMBLY	2
11	808421	BHSCS 5/16” x 3/4”	4
12	51200075	FW 5/16” ZY SEALING	4
13	51200076	LN LG FL SERR 5/16 CZ	4
14	51200077	COVER, A/C HOSES	1
15	813367	SELF-TAP SCREW 1/4” x 1/2”	3

silverhorn.co.uk

Steering Column Components

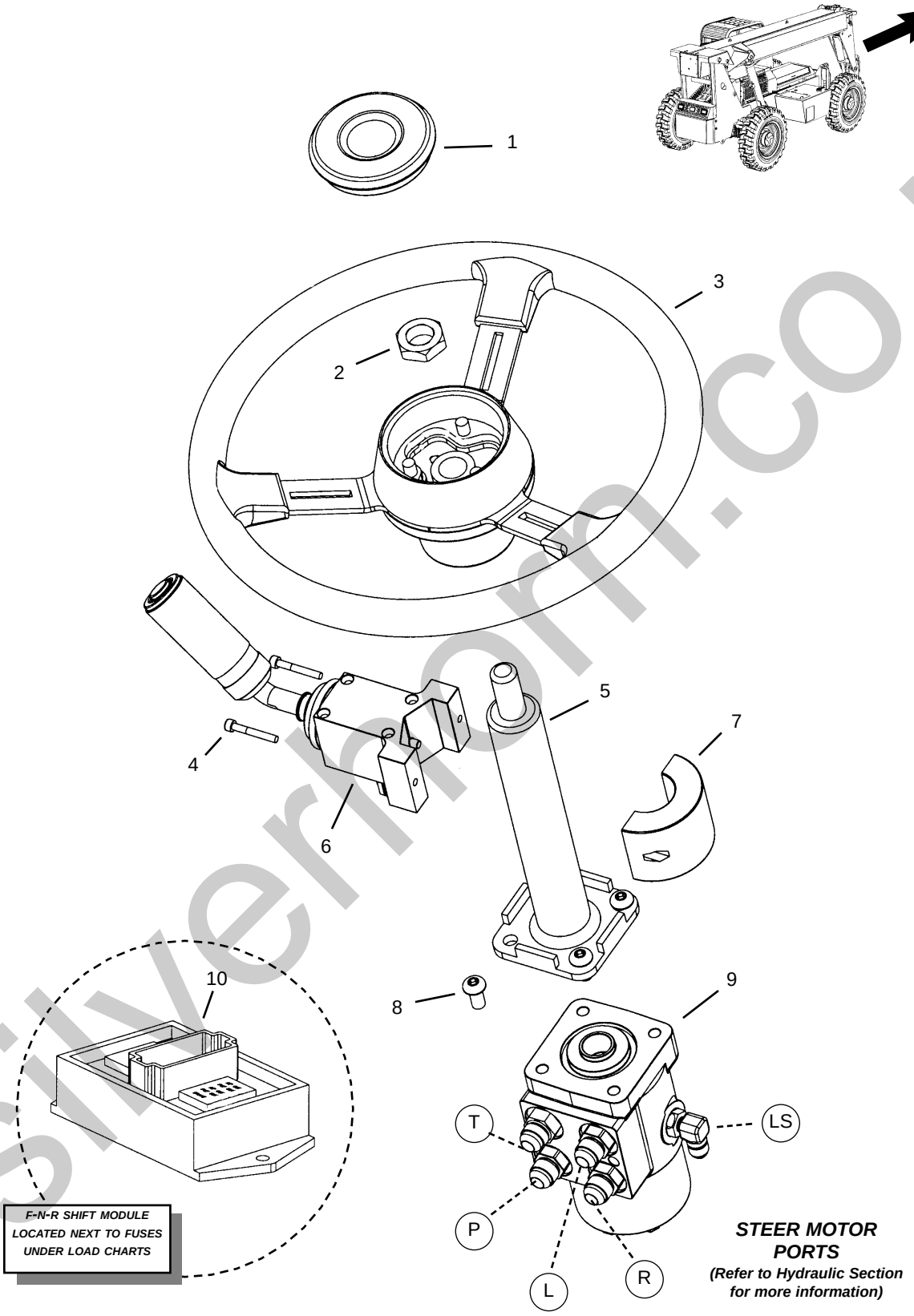

silverhorn.co.uk

Steering Column Components

Ref. No.	Part No.	Description	Qty. Req.
01	808435	CAP, STEERING WHEEL	1
02	808436	NUT, STEERING WHEEL	1
03	808432	STEERING WHEEL	1
04	808586	M5X.8X35mm HX SKTHD BOLT	2
05	808262	COLUMN, STEERING	1
06	51200078	F-N-R/SHIFTER *(includes #7)*	1
	809130	BOOT	1
07	813560	CLAMP, SHIFTER*(included w/ #6)*	1
08	813549	3/8”-16X1-1/4” BUTTN HD BOLT	4
09	808101	MOTOR, STEER	1
10	808099	MODULE, F-N-R SHIFTER	1
	808624	#8-32X5/8” SCREW	2
	51200017	#8-32 NUT	2

silverhorn.co.uk

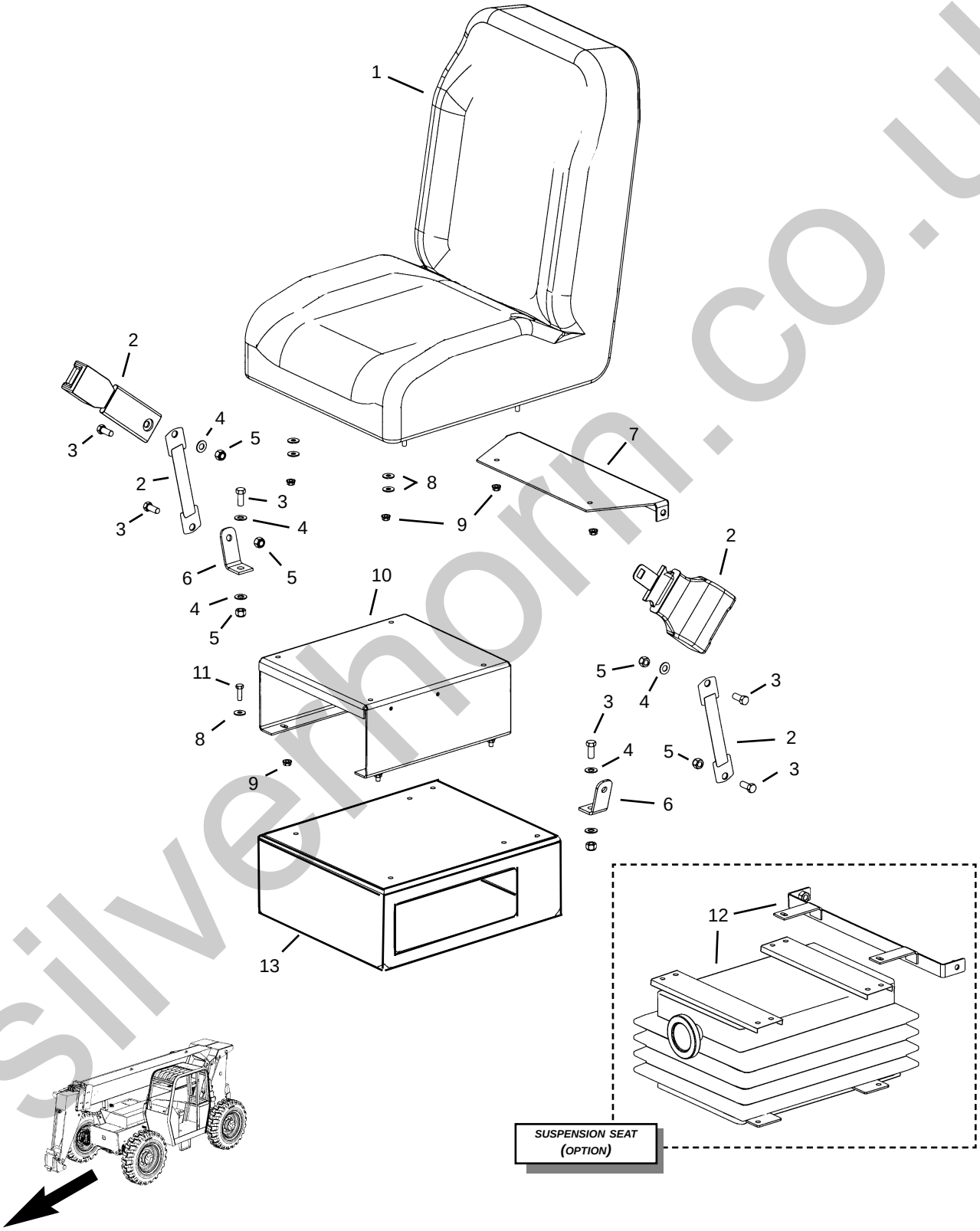

silvernorn.co.uk

Ref. No.	Part No.	Description	Qty. Req.
01	813608	SEAT	1
02	808914	SEAT BELT *(includes tethers)*	1
03	813609	7/16”-20X1” BOLT	AR
04	808598	7/16” FLAT WASHER	AR
05	808625	7/16”-20 NYLON INSERT NUT	AR
06	808899	BRACKET, TETHER	2
07[a]	808898	MOUNT, SEAT BELT	1
08	813610	5/16” FLAT WASHER	AR
09	808555	5/6”-18 NYLON INSERT NUT	AR
10[a]	809195	SEAT RISER	1
11	813598	5/16”-18X1” BOLT	AR
12[b]	808835	BELLOWS, SUSPENSION SEAT *(includes seat belt / tether bracket)*	1
13	808343	PEDESTAL / BOLT ON SEAT	1
	813574	3/8”X1” BOLT	2
	813697	3/8”X1-1/2” BOLT	2
	51200079	3/8” FLAT WASHER	8
	808663	3/8” NYLON INSERT NUT	4
14[b]	813615	BELLOWS, SEAT *(boot only)*	1
15[b]	813616	ADJUSTMENT KNOB	1
16[b]	813617	SHOCK, SUSP. SEAT	1

a *Used for standard seat only; not used with suspension seat option.*

b *Used for suspension seat option only.*

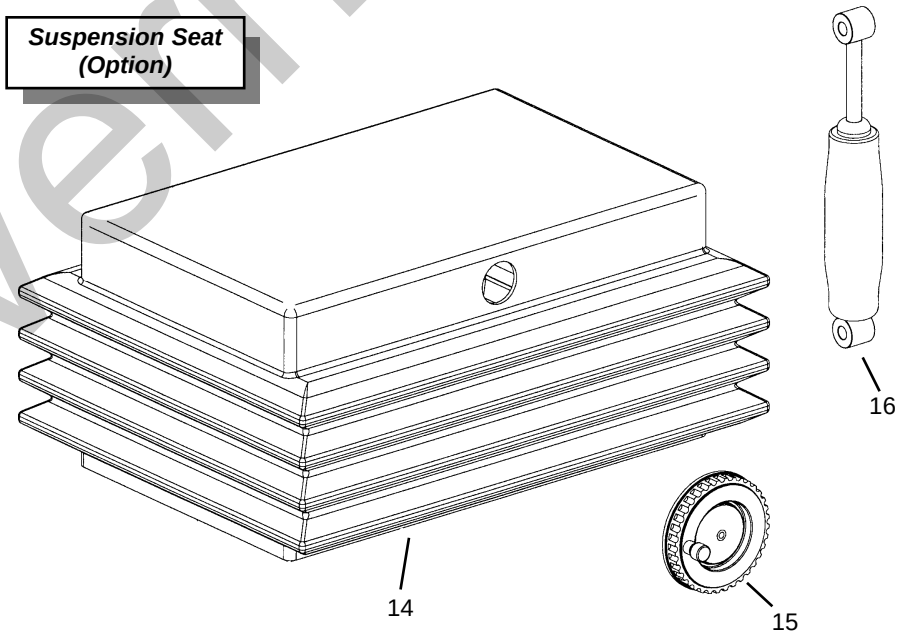

silverhorn.co.uk

Brake and Accelerator Pedals

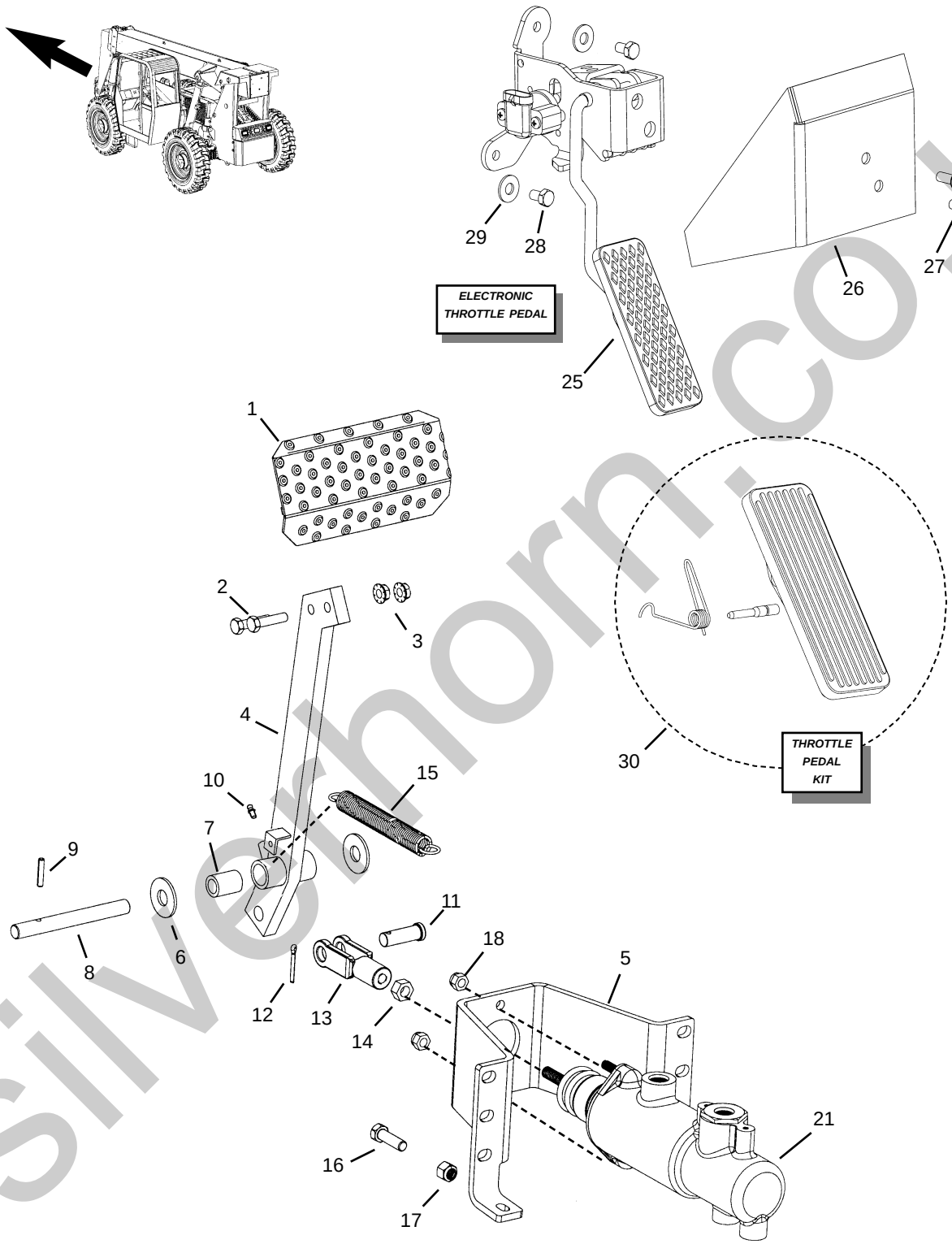

silverthorn.co.uk

Brake and Accelerator Pedals

Ref. No.	Part No.	Description	Qty. Req.
01	808711	PAD, BRAKE PEDAL	1
02	808604	5/16”-18X1-1/4” BOLT	2
03	808555	5/16”-18 FLANGE NUT	2
04	51200080	BRAKE LEVER ASSEMBLY *(includes item 7)*	1
05	51200081	BRACKET, BRAKE BOOSTER	1
06	808595	1/2” FLAT WASHER	1
07	51200082	BRONZE BUSHING *(included with item 4)*	1
08	808154	PIN, BRAKE LEVER PIVOT	1
09	808632	ROLL PIN, 0.19X1	1
10	808424	ZERK, GREASE 1/4”-28	1
11	808466	PIN, CLEVIS 1/2”X27/64”	1
12	808630	1/8”X1” COTTER PIN	1
13	51200084	YOKE, CLEVIS M10X1.5	1
14	51200084	M10-1.5 LOCK NUT	1
15	808674	SPRING, 13GA. 0.73X6”	1
16	813713	3/8”X1-1/4” BOLT	4
17	808663	3/8” NYLON INSERT NUT	4
18	51200085	M8-1.25 LOCK NUT	1
21	51200086	BRAKE CYLINDER, BOOSTER	1
25	813607	THROTTLE PEDAL, ELECTRONIC	1
26	51200087	COVER, ELEC. THROTTLE	1
27	808667	5/16”-18X3/4” BUTTN HD BOLT	2
	808671	5/16”-18 RETAIN/CLIP NUT	2
28	808602	5/16”-18X3/4” BOLT	2
29	813610	5/16” FLAT WASHER	2
30	51200088	KIT, THROTTLE PEDAL *(Includes pedal, pin and spring only; does not include electronic throttle.)*	1
		-- ITEMS NOT SHOWN-- ***(Throttle Wire Harness)***	
--	51200023	WIRE HARNESS, THROTTLE	1

silverhorn.co.uk

Brake Valve

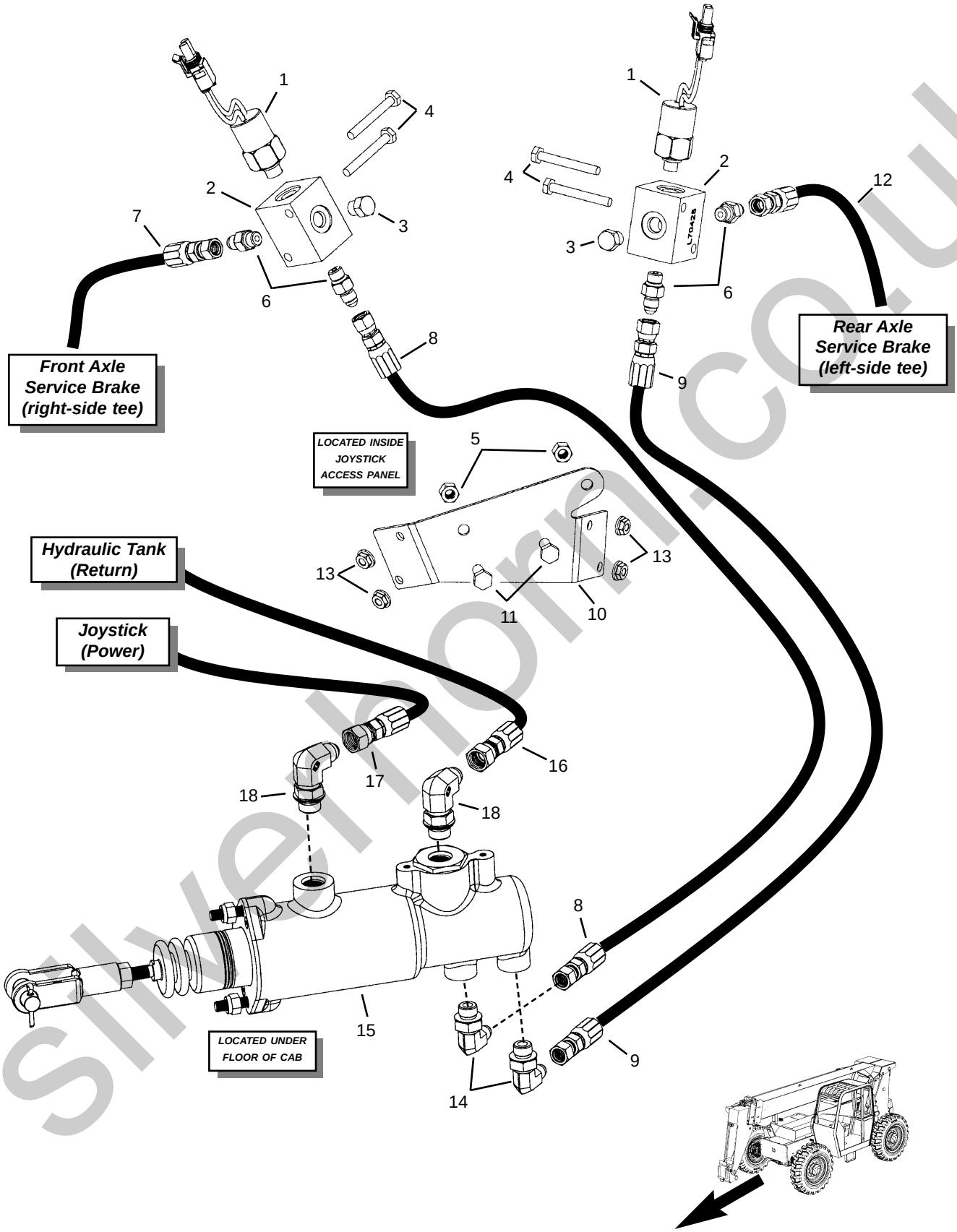

silverthorn.co.uk

Brake Valve

Ref. No.	Part No.	Description	Qty. Req.
01	51200089	PRESSURE SWITCH *(150 psi)*	2
02	808905	MANIFOLD, BRAKE LINE	1
03	814300	PLUG, -4ORM SAE	1
04	51200090	1/4”X2” BOLT	4
05	808662	5/16” NYLON INSERT NUT	2
06	814479	ADAP., -4ORM -4JICM	4
07	808281	HOSE, -4 A4/A6 66”	1
08	51200091	HOSE, -4 A4/A4 18”	1
09	51200091	HOSE, -4 A4/A4 18”	1
10	51200091	BRACKET, PRESS. SWITCH	1
11	808498	5/16’X3/4” BOLT	2
12	808279	HOSE, -4 A4/A6 90”	1
13	808545	1/4” FLANGE LOCK NUT	4
14	51200093	ADAP., MJO4 MMAORB14 90º	2
15	51200086	BRAKE CYLINDER, BOOSTER	1
16	813679	HOSE, -4 A6/A6 40”	1
17	808282	HOSE, -4 A6/DS6 35”	1
18	51200094	ADAP., MJ06 MMAORB16 90º	2

silverhorn.co.uk

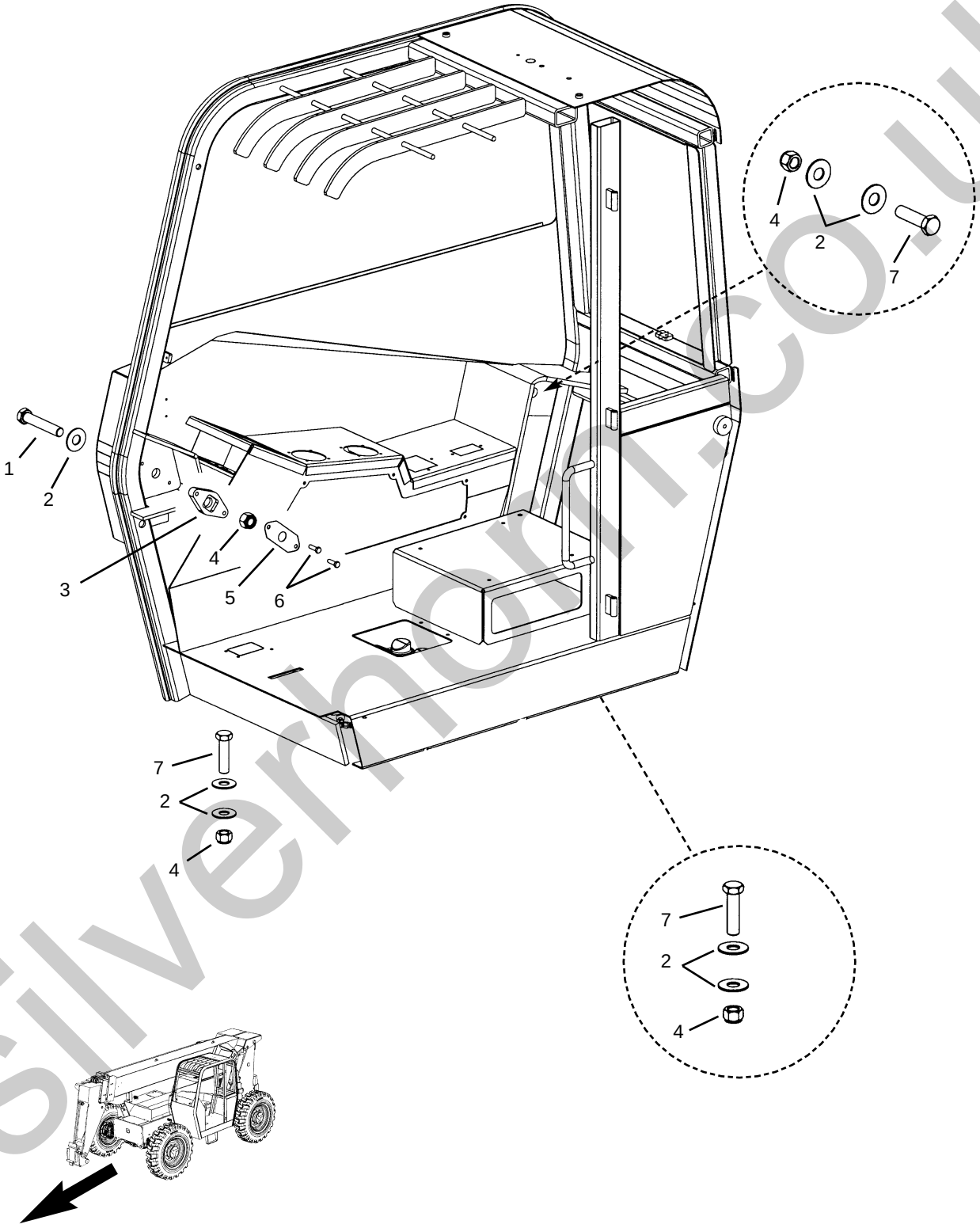

silverhorn.co.uk

Ref. No.	Part No.	Description	Qty. Req.
01	809196	1”-8X5-1/2” GR8 BOLT	1
02	51200095	1” SAE FLAT WASHER	7
03	808259	RETAINER, CANOPY NUT	1
04	809198	1”-8 CLASS C LOCK NUT	4
05	808092	WASHER, CANOPY NUT	1
06	813713	3/8”-16X1-1/4” BOLT	2
07	808309	1”-8X3-3/4” GR8 BOLT	3
		-- ITEMS NOT SHOWN--	
--	808733	HOLE PLUG, 2-1/2” DIA *(plugs hole in cab where side bolt attaches)*	1

silverhorn.co.uk

Hoods and Covers - Part 1 of 2

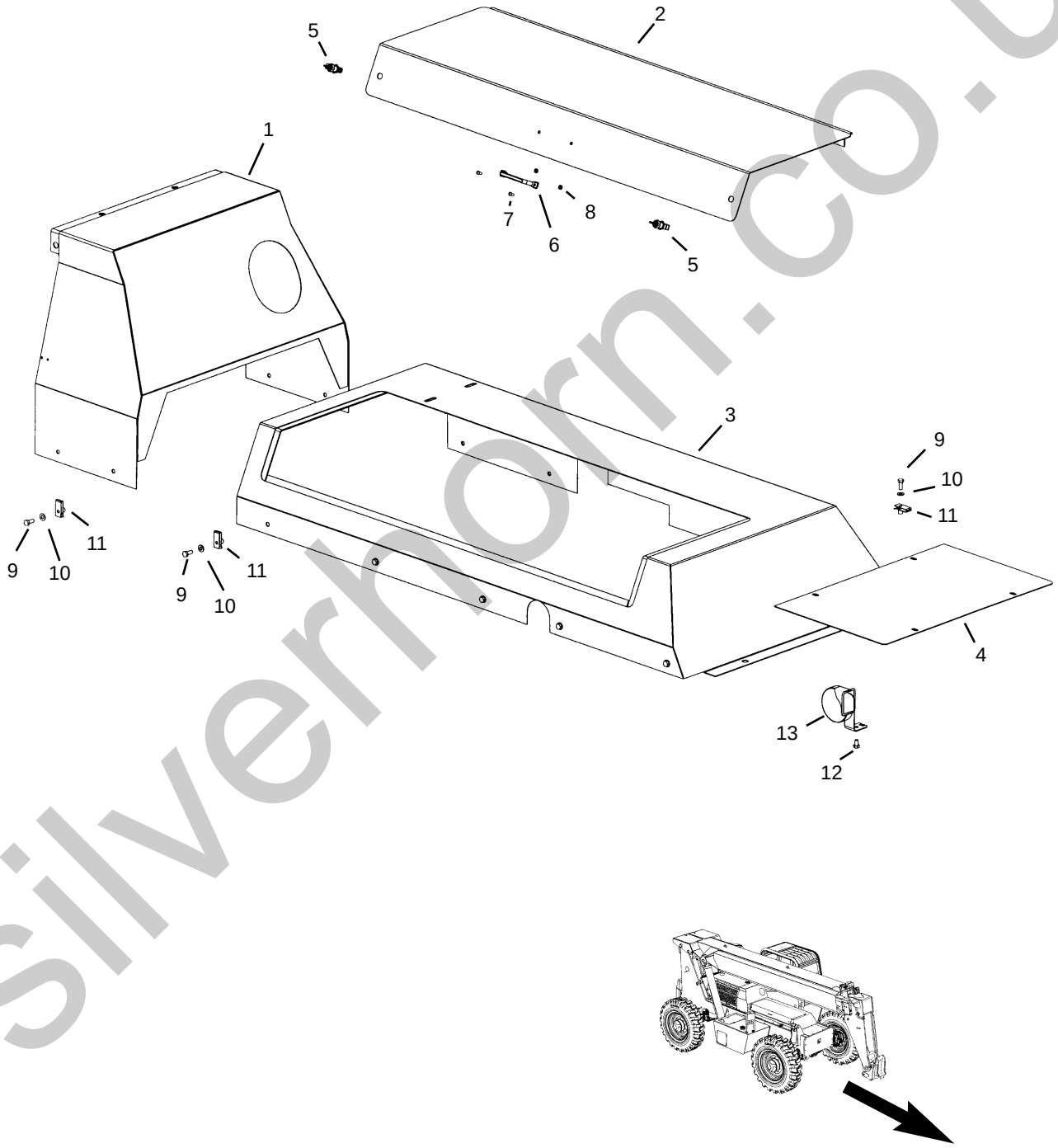

silverhorn.co.uk

Hoods and Covers - Part 1 of 2

Ref. No.	Part No.	Description	Qty. Req.
01	51200096	HOOD, FRONT ENGINE	1
02	51200097	COVER, ACCESS	1
03	51200098	HOOD, FRONT	1
04	51200099	COVER, FRONT FRAME	1
05	51200100	LATCH	2
06	808774	HANDLE	1
07	51200101	#10-32X1/2” SCREW	2
08	808544	#10-32 NUT	2
09	808498	5/16”-18X3/4” BOLT	AR
10	813729	5/16” FLAT WASHER	AR
11	808671	5/16” RETAINED NUT CLIP	AR
12	813531	5/16”X1/2” BOLT	1
13	808437	HORN, 12 VOLT	1

silverhorn.co.uk

Hoods and Covers - Part 2 of 2

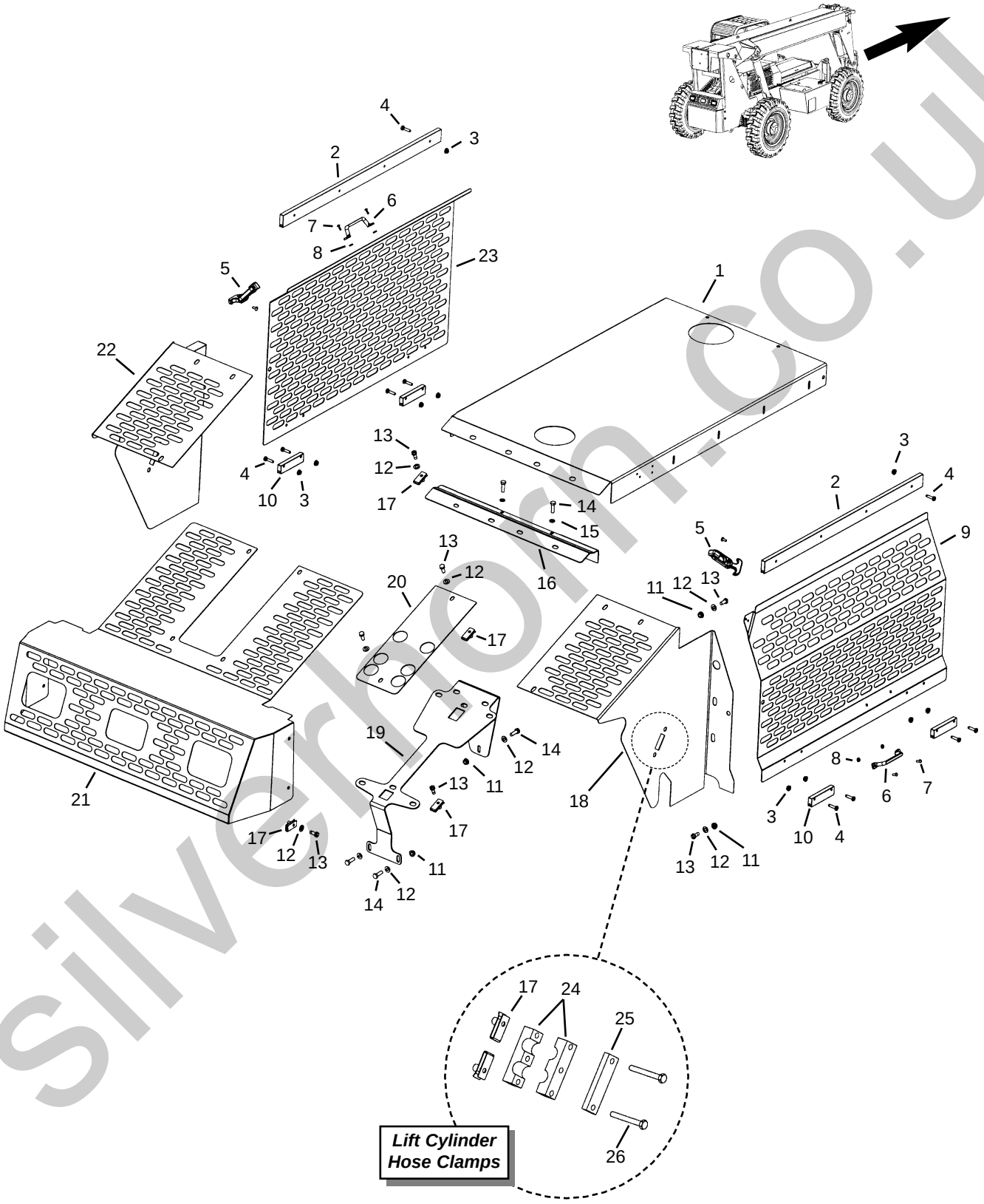

silverhorn.co.uk

Hoods and Covers - Part 2 of 2

Ref. No.	Part No.	Description	Qty. Req.
01	51200102	HOOD, TOP	1
02	808801	GUIDE, NYLATRON 28”	2
03	808545	1/4” FLANGE LOCK NUT	AR
04	808601	1/4”X1” BOLT	AR
05	51200103	LATCH, T-HANDLE	2
	809771	#10-24X1/2” RND HD SCREW	AR
06	808774	HANDLE	2
07	51200101	#10-32X1/2” SCREW	AR
08	808544	#10-32 NUT	AR
09	51200104	PANEL, ENGINE R.H.	1
10	808775	SLIDE, NYLATRON 4”	4
11	808555	5/16” FLANGE LOCK NUT	AR
12	813729	5/16” FLAT WASHER	AR
13	808498	5/16”X3/4” BOLT	AR
14	813598	5/16”X1” BOLT	AR
15	808497	5/16” LOCK WASHER	AR
16	51200105	MOUNT, TOP HOOD	1
17	808671	FASTENER, RETAIN NUT	AR
18	51200106	PANEL, SIDE RADIATOR R.H.	1
19	51200107	SUPPORT, REAR COVER	1
20	51200108	COVER, MAIN VALVE	1
21	51200029	HOOD, REAR	1
22	51200109	PANEL, SIDE RADIATOR L.H.	1
23	51200110	PANEL, ENGINE L.H.	1
24	808730	CUSHION, HOSE 7/8” TWIN	4
25	808729	PLATE, TWIN-WIDE TOP	2
26[b]	51200111	5/16”-18X2-1/2” BOLT	4

a *Refer to the Cab - Front and Rear Lights section for the tail lights and back-up alarm.*

b *Refer to Boom Hydraulics - Boom Up / Down Section for more information.*

silverhorn.co.uk

Fuel Tank and Battery

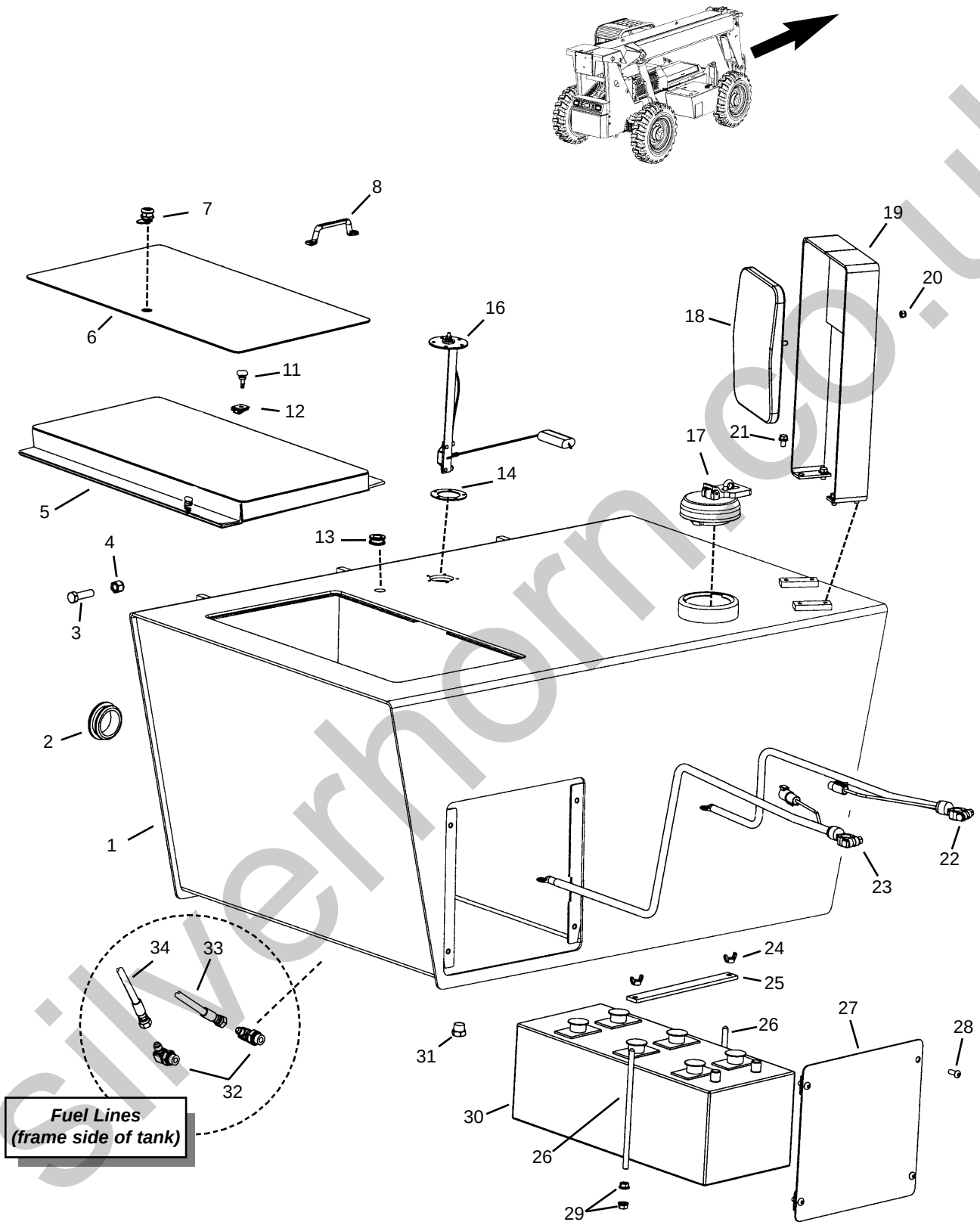

silverhorn.co.uk

Fuel Tank and Battery

Ref. No.	Part No.	Description	Qty. Req.
01	51200112	WELDMENT, FUEL TANK	1
02	808091	GROMMET, FUEL TANK	1
03	808612	1/2”-13X1-3/4” BOLT	6
04	808665	1/2”-13 NYLON INSERT NUT	6
05	809772	PLATE, TOOLBOX BOTTOM	1
06	51200113	TOOLBOX COVER, WELDMENT	1
07	808900	CAMLOCK	1
	809106	KEY ONLY *(stamped CH751)*	1
08	808774	HANDLE, HOOD	1
	51200101	#10-32 X 1/2” RND HD SCREW	2
	808544	#10-32 NUT	2
11	809565	SCREW, CAPTIVE	2
	809566	SCREW, RETAINER	2
12	809567	SCREW, RECEPTACLE	2
13	808718	GROMMET	1
14	808439	GASKET, SENDER	1
16	809503	SENDER/FUEL LEVEL *(includes #14 Gasket)*	1
17	51200114	CAP/FUEL ASSEMBLY *(vented)*	1
18	808731	MIRROR, 6.5X10 CONVEX	1
19	51200115	MIRROR BRACKET	1
20	808661	1/4” NYLON INSERT NUT	1
21	808072	5/16”x1/2 FLAT LOCK BOLT	4
22	808104	CABLE, NEG BATTERY	1
	809295	POWER PLUG, PLUG	1
	809296	#8 DEUTSCH SOCKET	1
23	51200117	CABLE, POS BATTERY	1
	809294	POWER PLUG, RECEPTACLE	1
	809297	#8 DEUTSCH PIN	1
24	814679	3/8”-16 WINGNUT	2
25	808686	BATTERY HOLDDOWN BAR	1
26	808896	ROD, BATTERY HOLDDOWN	2
27	808087	PLATE, BATTERY ACCESS	1
28	808667	5/16”-18X3/4” BHSCS	4
29	51200053	3/8”-16 FLANGE NUT	4
30	NSS	12VDC BC1 4DLT BATTERY	1
31	51200118	ADAP., PLUG -8 ORING SAE	1
32	814517	ADAP., -8ORM -6JICM 90º	2
33	809109	HOSE, 3/8” X 73” *(supply)*	1
34	813699	HOSE, 1/4” X 100” *(return)*	1

silverhorn.co.uk

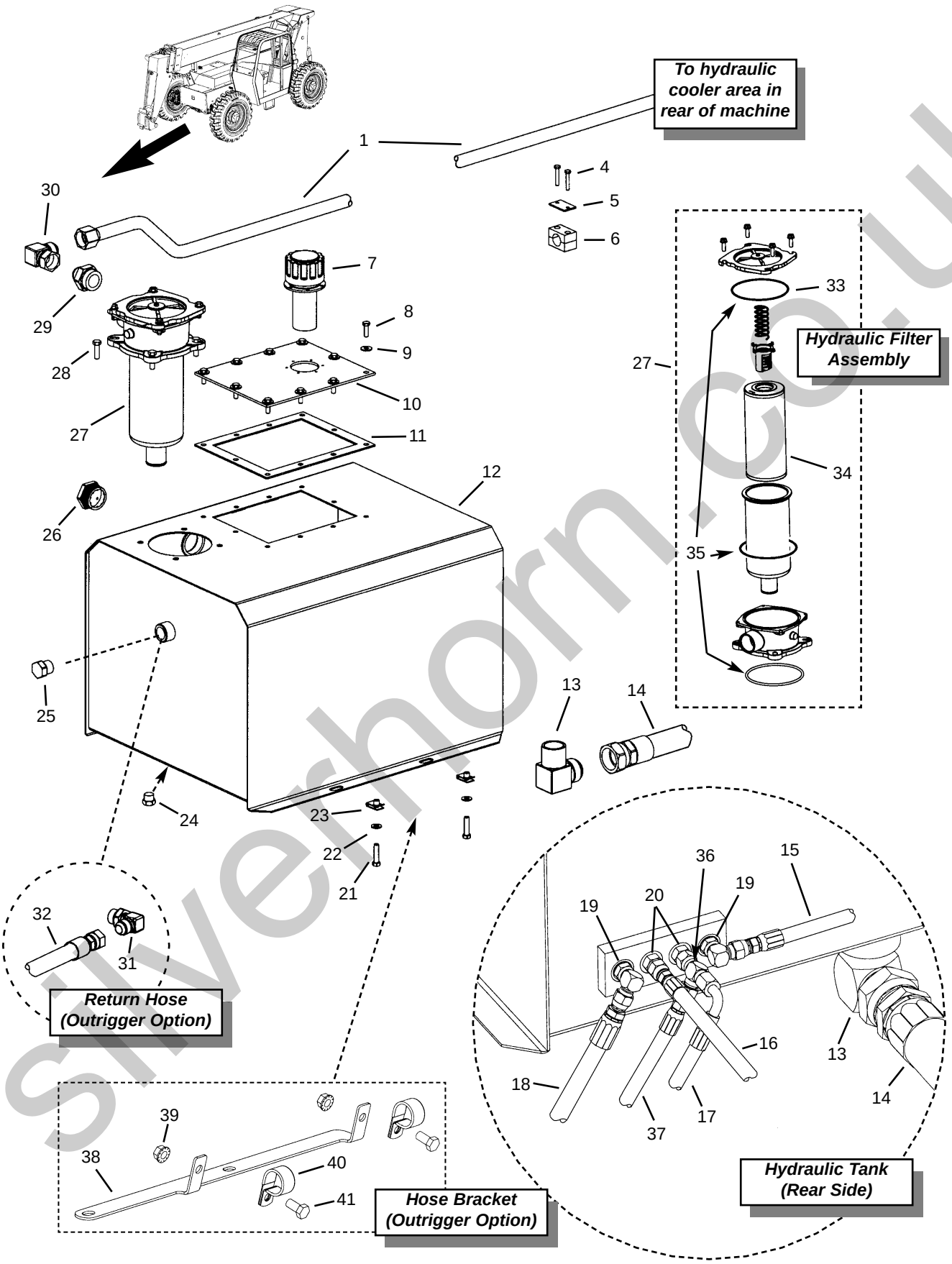

silverhorn.co.uk

Hydraulic Tank

Ref. No.	Part No.	Description	Qty. Req.
01	51200119	TUBE ASSEMBLY	1
04	809112	1/4”-20X1-1/2” BOLT	2
05	808153	PLATE, TOP CUSHION	1
06	808152	CLAMP, CUSHION TUBE	1
07	809170	FILL CAP ASSEMBLY	1
08	813598	5/16”-18X1” BOLT	10
09	813610	5/16” FLAT WASHER	10
10	808788	ACCESS COVER	1
11	808789	GASKET	1
12[c]	808110	HYDRAULIC TANK	1
13	808440	ADAP., -24JICM 24NPTM 90º	1
14	808713	HOSE, -24 A24/A24 35”	1
15	808326	HOSE, -6 A6/DS6 18”	1
16	814501	HOSE, 4 A6/DS6 20”	1
17	808282	HOSE, -4 A6/D6 35”	1
18	808716	HOSE, -6 A6/DS8 52”	1
19	813597	ADAP., -6ORM -6JICM 90º	2
20	813596	ADAP., -6ORM -6JICM STR.	2
21	813677	3/8”-16X3/4” BOLT	2
22	813591	3/8” FLAT WASHER	2
23	808793	3/8”-16 RETAINED NUT	2
24	51200118	PLUG, -8 ORING SAE	1
25[a]	51200120	PLUG, -12 ORING SAE	1
26	808410	SIGHT GLASS	1
27	808100	FILTER ASSEMBLY. *(Includes items 33-35)*	1
28	813713	3/8”-16X1-1/4” BOLT	4
29	51200121	ADAP., -20ORM -16JICM STR	1
30	814429	ADAP., -16JICM -16JICFS 90º	1
31[b]	813664	ADAP., -12ORM -12JICM 90º	1
32[b]	51200489	HOSE, -12 A12/DS12 23”	1
33	808339	O-RING, FILTER	1
34	808005	HYDRAULIC FILTER ELEMENT	1
35	808340	SEAL KIT *(three o-rings)* *(includes item 33)*	1
36	814461	ADAP., -6 SWIVEL TEE	1
37	813679	HOSE, -4 A6/A6 40”	1
38[bd]	51200122	HOSE SUPPORT BRACKET	1
39[b]	51200053	LN FL SERR 3/8" CZY	2
40[b]	51200490	CLAMP, HOSE 1.00 x 0.41	2
41[b]	813677	CS 3/8" x 3/4" C5ZY	2

-- ITEMS NOT SHOWN --
(Located Inside the Hydraulic Tank)

--	809202	ADAP., 1-1/2” NPT 90º ELBOW	1
--	808690	ADAP., 1-1/2” PIPE NIPPLE	1
--	808006	STRAINER, HYD. OIL	1

a *Units not equipped with outriggers.*
b *Units equipped with outriggers.*
c *Includes all items listed under “Items Not Shown.”*
d *Used to support the hose fromt he main control "IN" port.*

HOSE LOCATOR

01	HYDRAULIC TUBE *(from hyd. tank)*	HYD. COOLER “UPPER”
14	HYDRAULIC TANK *(bottom)*	HYDRAULIC PUMP “IN”
15	HYDRAULIC TANK RETURN *(return manifold)*	FLOW DIVIDER “T”
16	HYDRAULIC TANK RETURN *(return manifold)*	PRIORITY VALVE “T”
17	HYDRAULIC TANK RETURN *(return manifold)*	JOYSTICK *(lift/extend controller)* “T”
18	HYDRAULIC TANK RETURN *(return manifold)*	STEER MOTOR “T”
32	HYDRAULIC TANK RETURN *(front)*	OUTRIGGER VALVE “T”
37	HYDRAULIC TANK RETURN *(return manifold)*	BRAKE BOOSTER CYLINDER

silverhorn.co.uk

Outriggers - Option

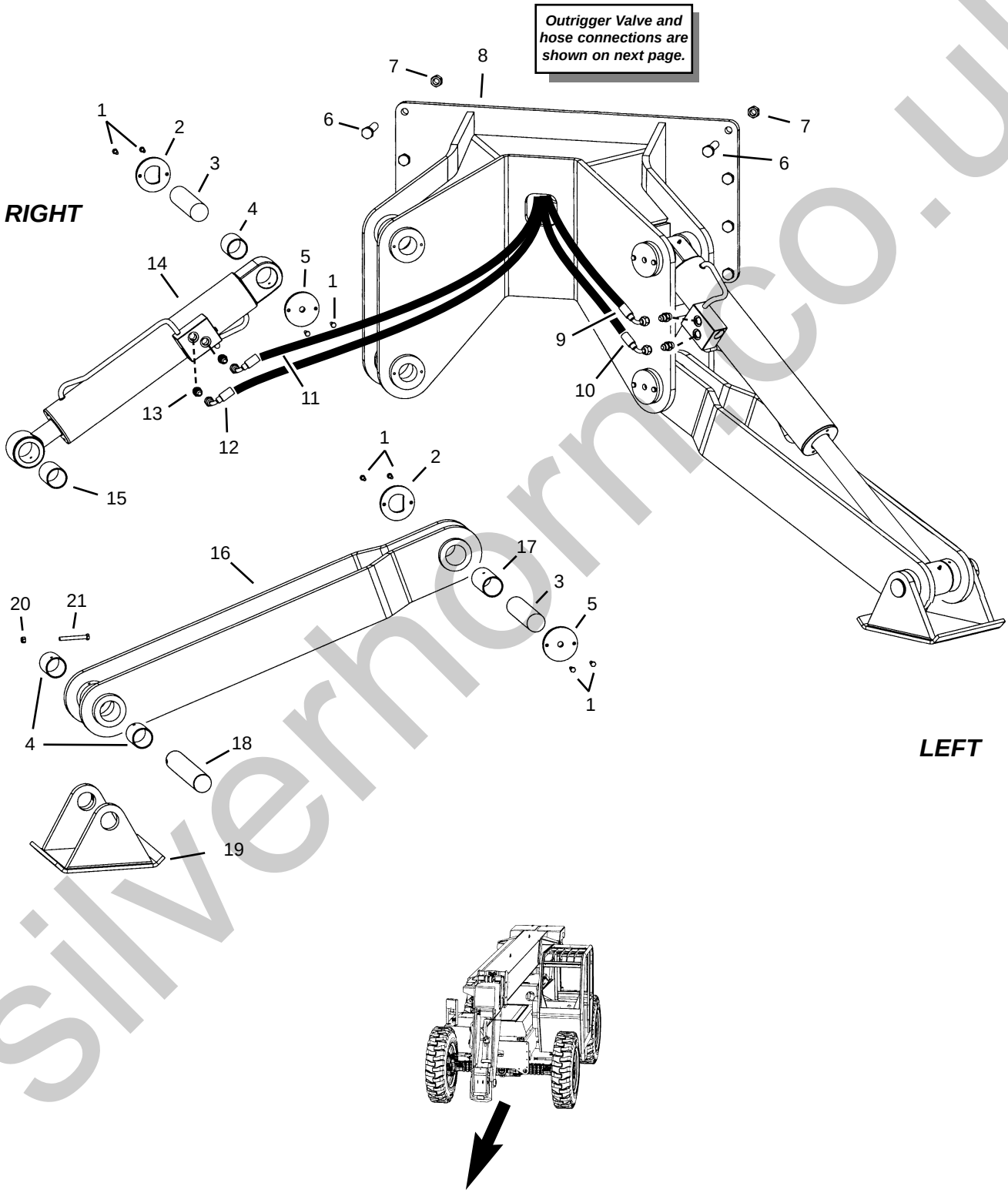

silverhorn.co.uk

Ref. No.	Part No.	Description	Qty. Req.
01	808498	5/16”-18x3/4” BOLT	16
02	808874	CAP, PIN LOCK	4
03	808912	PIN, PIVOT	4
04	808858	BUSHING	6
05	808873	CAP, PIVOT PIN	4
06	808620	3/4”-10X3” BOLT GR8	8
07	808583	3/4”-10 STOVER LOCK NUT “C”	8
08	808164	WLDMNT, OUTRIGGER MNT	1
09	808851	HOSE, -6 A8/DS8 54” *(extend)*	1
10	808851	HOSE, -6 A8/DS8 54” *(retract)*	1
11	808851	HOSE, -6 A8/DS8 54” *(extend)*	1
12	808851	HOSE, -6 A8/DS8 54” *(retract)*	1
13	813708	ADAP., -8ORM -8JICM STR	4
14	*Note a*	CYLINDER, OUTRIGGER	2
15	808911	BUSHING	2
16	808909	WLDMNT, OUTRIGGER LEG	2
17	808908	BUSHING	2
18	808784	PIN, PIVOT	2
19	808783	WLDMNT, OUTRIGGER PAD	2
20	808663	3/8”-16 CNTR LOCK NUT	2
21	813711	3/8”-16X3” BOLT	2
22	813462	SWITCH, LEFT OUTRIGGER	1
23	813464	SWITCH, RIGHT OUTRIGGER	1
24	51200124	MOUNT, OUTRIGGER SWITCH	1
25	808600	1/4”X5/8” BUTTON HEAD BOLT	3
26	808545	1/4” FLANGE LOCK NUT	3
		-- ITEMS NOT SHOWN --	
--	808424	ZERK, GREASE 1/4”-28 STR	AR
		(Wire Harness)	
--	51200125	WIRE HARNESS, OUTRIGGERS	1

a *Refer to Hydraulic Section for cylinder part number.*

NOTE: Refer to the next page for information regarding the outrigger valve and related hoses. For more information regarding the outrigger cylinders, please refer to the Hydraulic section.

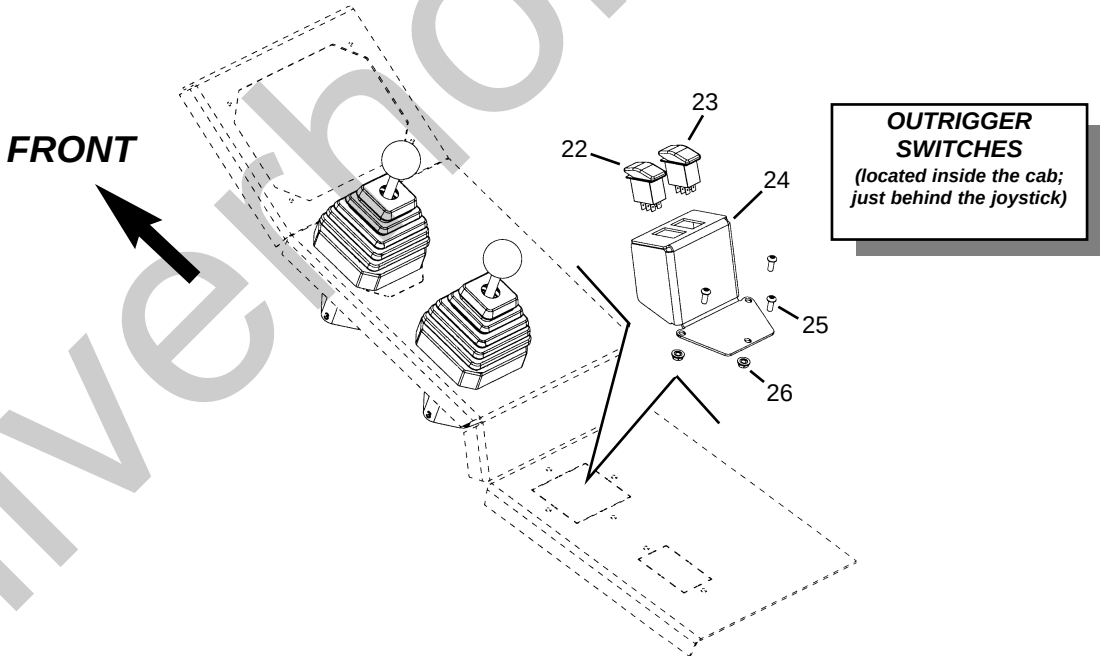

silverthorn.co.uk

Outrigger Valve - Option

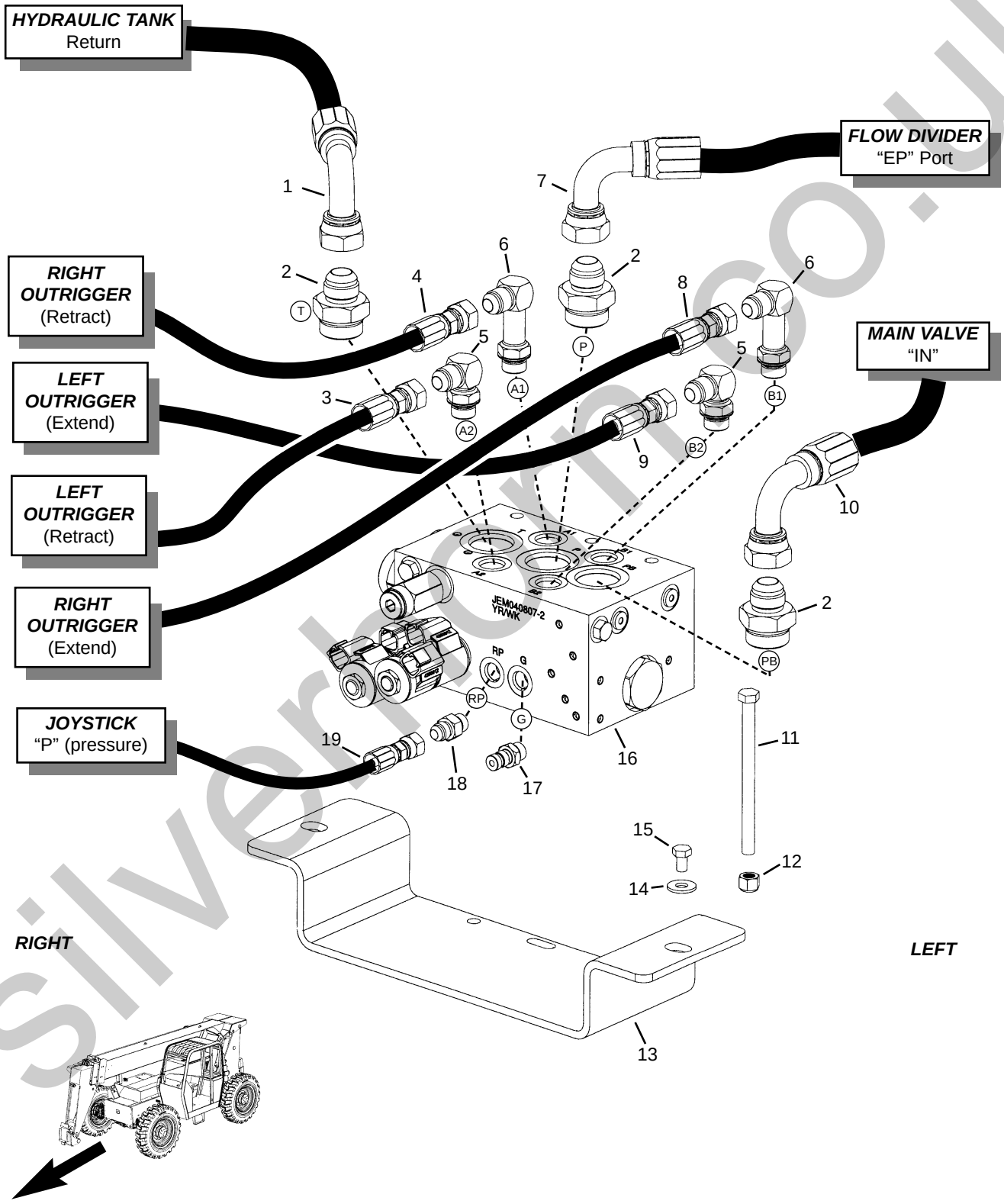

silverhorn.co.uk

Outrigger Valve - Option

Ref. No.	Part No.	Description	Qty. Req.
01[a]	51200489	HOSE, -12 A12/DS12 30”	1
02	813844	ADAP., -16ORM -12JICM STR	3
03	808851	HOSE, -6 A8/DS8 54”	1
04	808851	HOSE, -6 A8/DS8 54”	1
05	814308	ADAP., -8ORM -8JICM 90º	2
06	814513	ADAP., -8ORM -8JICM LONG 90º	2
07	808268	HOSE, -12 A12/DS12 74”	1
08	808851	HOSE, -6 A8/DS8 54”	1
09	808851	HOSE, -6 A8/DS8 54”	1
10[b]	51200123	HOSE, -12 H12/DS12 40”	1
11	51200012	3/8”-16X5” BOLT	3
12	808663	3/8”-16 LOCK NUT	3
13	51200126	MOUNT, OUTRIGGER VALVE	1
14	813610	5/16” FLAT WASHER	2
15	813531	5/16”-18X1/2” BOLT	2
16	51200127	VALVE, OUTRIGGER	1
17	809174	TEST PORT	1
18	813596	ADAP., -6ORM -6JICM STR	1
19	808852	HOSE, -4 A6/A6 96”	1
		-- (ITEMS NOT SHOWN) --	
--	51200125	WIRE HARNESS, OUTRIGGERS	1

a *Refer to Hydraulic Tank for location of hose; item 32.*

b *Hose is supported near the hydraulic tank with bracket P/N 51200122.*

NOTE: *Refer to the previous page for more information regarding hose routing to the outrigger cylinders.*

silverhorn.co.uk

1

Located under tank/engine cover attached to inner frame

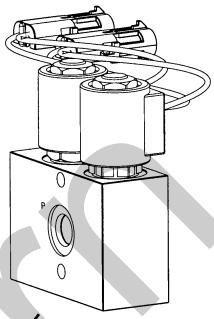

2

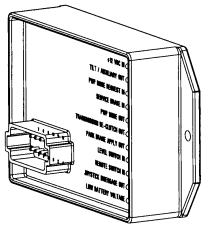

3

Located under dash in Joystick Access Cover

4

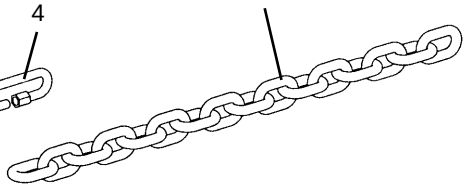

5

Chain and Shackle
(Used to secure Personnel Work Platform)

silverhorn.co.uk

Ref. No.	Part No.	Description	Qty. Req.
01	808935	LEVEL SENSOR	1
02	808127	MANIFOLD, PWP/WPS	1
03	809770	PWP/WPS CONTROL MODULE	1
04[a]	808946	5/16” CHAIN SHACKLE	1
05[a]	808945	5/16” CHAIN GR40 16 LINKS	1

Ref. No.	Part No.	Description	Qty. Req.
		-- ITEMS NOT SHOWN --	
--	808938	PWP/WPS SWITCH *(located on dash)*	1
--	809763	PWP/WPS WIRE HARNESS *(under dash and to level sensor)*	1

a *Chain shackle and chain are used to secure the Personnel Work Platform.*

silverhorn.co.uk

E-Stop Remote — Transmitter and Receiver

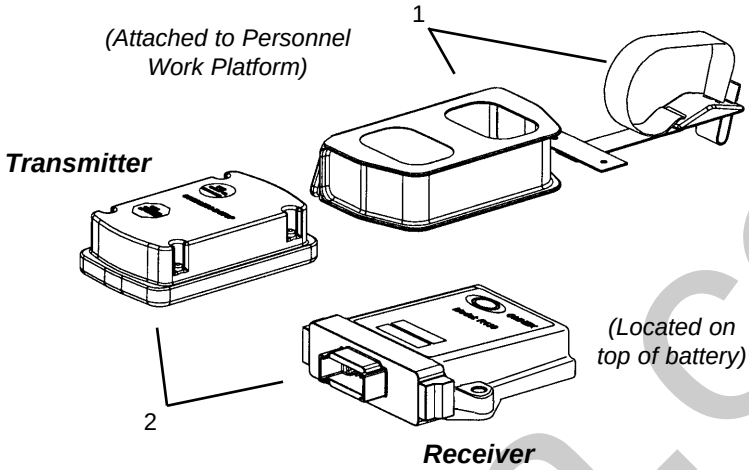

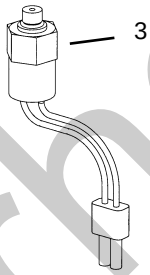

Pressure Switch
Refer to brake manifold in hydraulic section.

Ref. No.	Part No.	Description	Qty. Req.
01	813620	WIRELESS SWITCH POUCH	1
02[a]	813621	E-STOP REMOTE SYSTEM *(Transmitter and Receiver)*	1
03	813619	PRESSURE SWITCH	1

Ref. No.	Part No.	Description	Qty. Req.
		-- ITEMS NOT SHOWN --	
--	813622	HARNESS, E-STOP REMOTE *(e-stop receiver)*	1

a *The transmitter and receiver are frequency-matched; therefore, it is required to purchase both as a set.*

silverhorn.co.uk

Radio Remote — Transmitter and Receiver

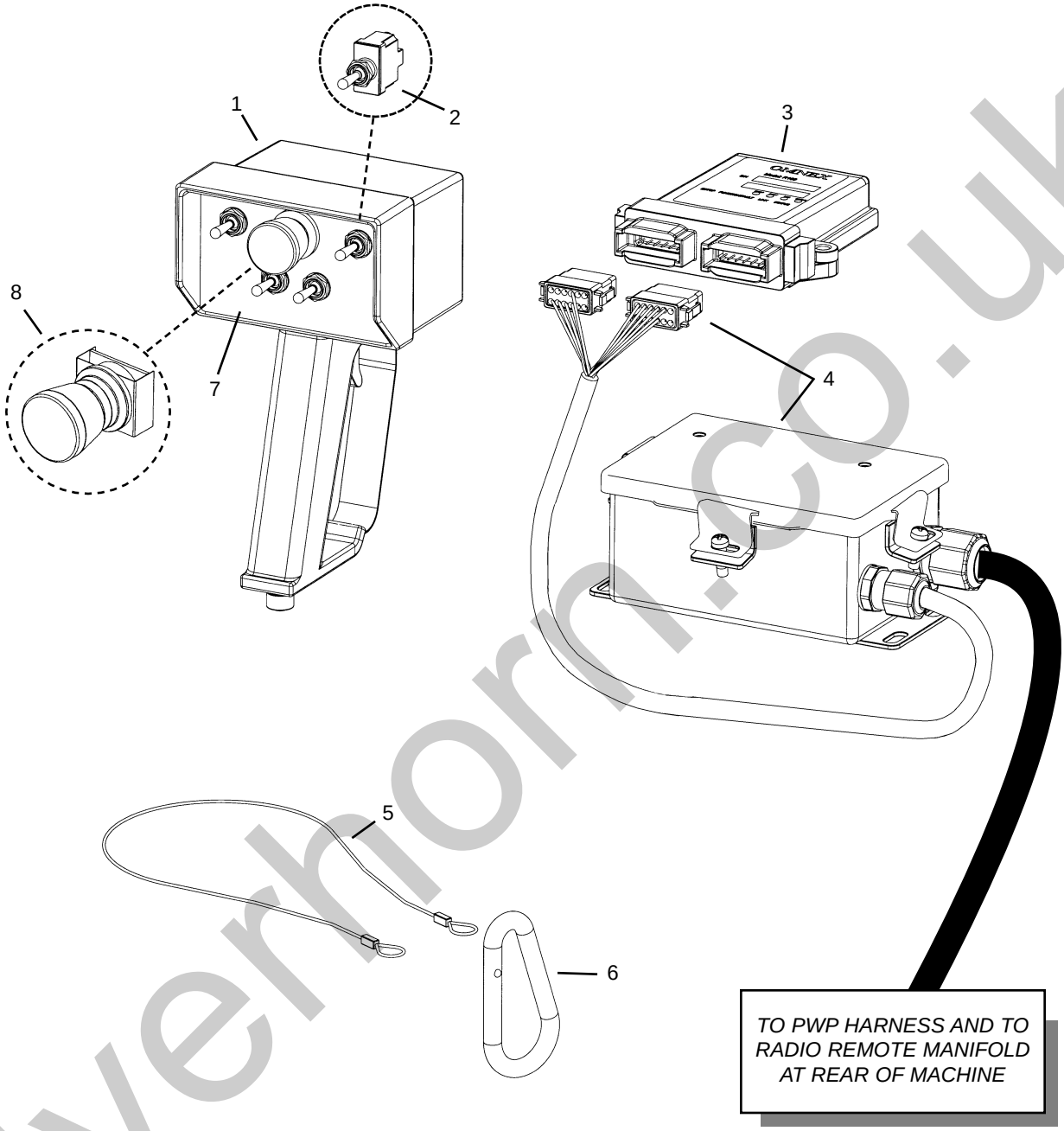

Ref. No.	Part No.	Description	Qty. Req.
--	809730	RADIO REMOTE, COMPLETE	1
		(Includes all items shown)	
01[a]	809726	REMOTE TRANSMITTER	1
02	809727	SWITCH, TOGGLE 3 POS. MIL	4
03	51200128	REMOTE RECEIVER	1
04	51200129	ENCLOSURE / CIRCUIT BOARD	1
		(includes wire harness)	
05	809728	LANYARD *(wire cable)*	1
06	809729	SNAP RING, LANYARD	1
07	813625	LABEL	1
08	813623	SWITCH, E-STOP *(push button)*	1
		-- ITEMS NOT SHOWN --	
--	809731	HARNESS, RADIO REMOTE	1

a *Requires programming; refer to "Radio Remote Operator's Manual" included with the Radio Remote Control at the time of purchase.*

silverhorn.co.uk

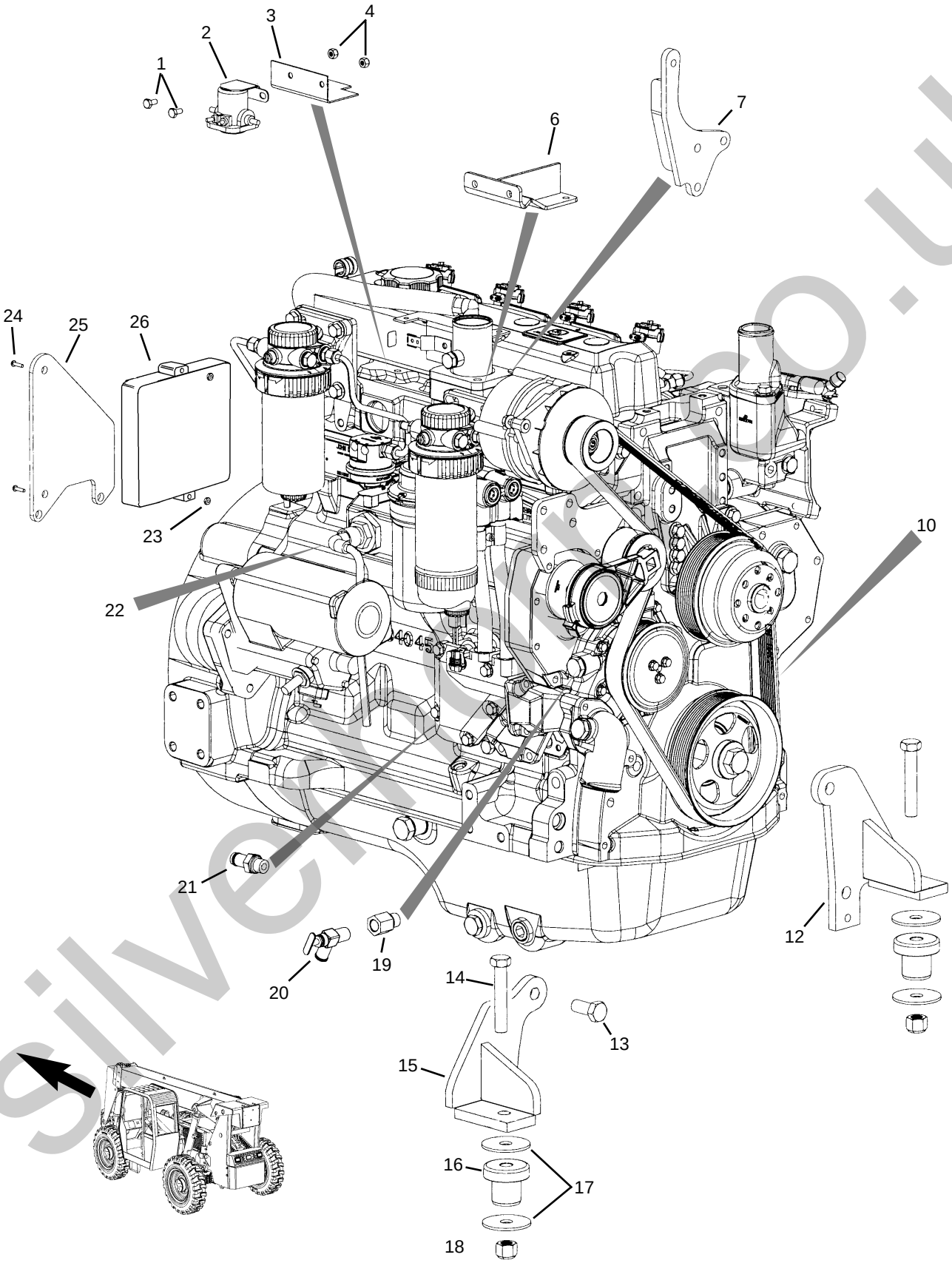

silvermachinery.co.uk

Ref. No.	Part No.	Description	Qty. Req.
01	809742	1/4”X1/2” BOLT	2
02	808434	RELAY, ENGINE STARTER	1
03	808102	MOUNT, RELAY	1
04	808661	1/4” NUT	2
06	51200130	FUEL FILTER MOUNT	1
07	808846	BRACKET, ALTERNATOR	1
10[a]	809830	FAN BELT *(standard)*	1
12	808112	ENGINE MOUNT *(right)*	1
13	808613	M16-2X35M BOLT GR8.8	4
14	808615	5/8”-11X3-1/2” BOLT	2
15	808113	ENGINE MOUNT *(left)*	1
16	808744	MOUNT, VIBRATION ISOLATOR	2
17	808749	WASHER, ISOLATOR MOUNT	4
18	808664	5/8”-11 NYLON INSERT NUT	2
19	51200062	ADAP., M18 -6NPTF STR *(long)*	1
20	813497	SHUTOFF, MANUAL/WATER	1
21	808465	ADAP., M18 10 BEAD STR	1
22	808798	ENGINE BLOCK HEATER *(opt.)*	1
23	51200017	#8-32 NUT	2
24	51200131	#8-32X5/8” SCREW	2
25	51200132	ECU MOUNT	1
26	NSS	ECU *(contact John Deere Dealer)*	1

Ref. No.	Part No.	Description	Qty. Req.
		-- ITEMS NOT SHOWN --	
		(Electrical)	
--	813466	HARNESS *(ECU Interface)*	1
--	51200023	HARNESS *(Throttle)*	1
		(Ether - Optional)	
--	808322	HARNESS, ETHER KIT *(includes 21” BLU/WHT jumper wire)*	1
--	808913	ETHER KIT *(optional)* *(includes: thermostat, atomizer, valve bracket, fitting, clamp and tubing. Does not include ether canister; obtain locally.)*	1
--	808925	SWITCH, ROCKER *(ether)* *(located in dash panel)*	1
		(Fuel Line)	
--	51200024	HOSE END, -5 JICF PUSHON	1
--	809109	HOSE, 3/8” X 73” *(supply)*	1
--	813699	HOSE, 1/4” X 100” *(return)*	1
--	51200026	ADAP., -6MFS -6FFSS 90^0	1

a *Used when machine is not equipped with the A/C option; refer to next page for the fan belt when the machine is equipped with the A/C option.*

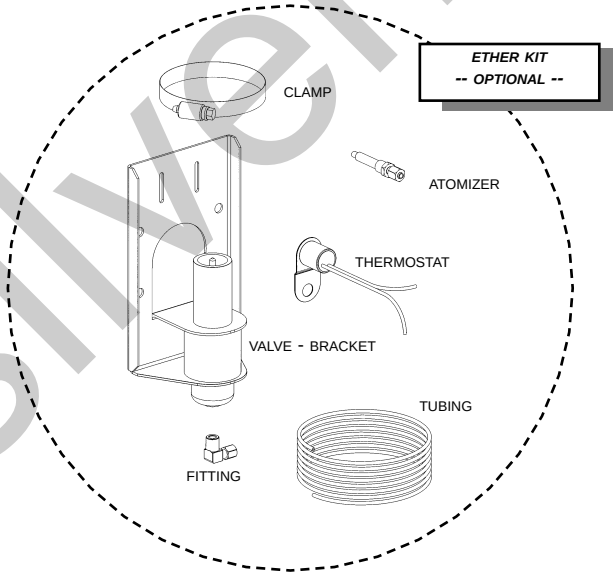

silverhorn.co.uk

A/C Compressor and Fan Belt - (Option)

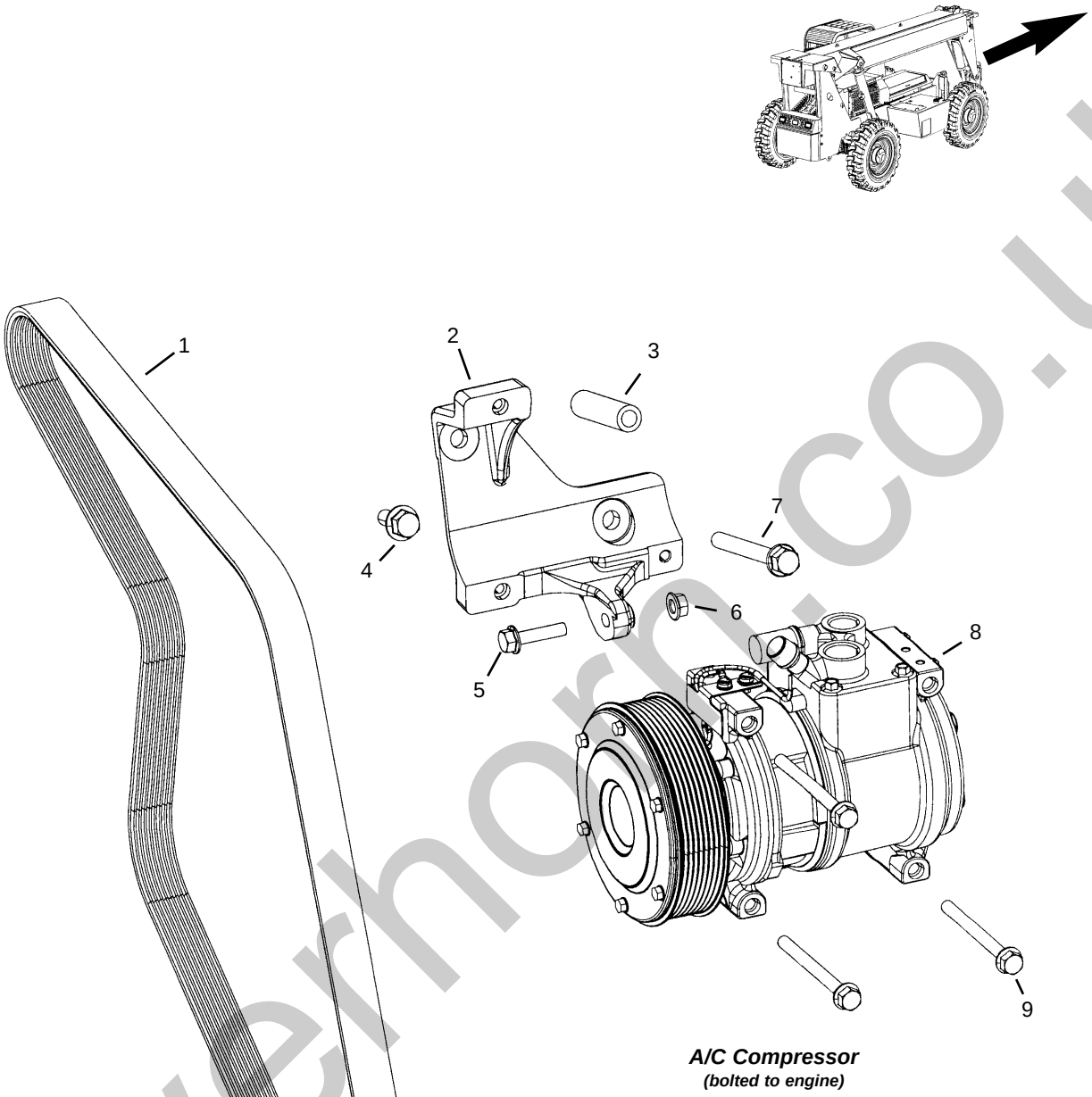

silverhorn.co.uk

A/C Compressor and Fan Belt - (Option)

Ref. No.	Part No.	Description	Qty. Req.
01[a]	51200133	FAN BELT *(A/C equipped)*	1
02	813536	BRACKET	1
	813537	BUSHING, ALIGNMENT *(not shown)*	1
03	813538	BUSHING	1
04	813535	CS M10-1.25 x 25 10.9	1
05	813540	CS M8-1.25 x 30 10.9	1
06	813541	NUT M8-1.25	1
07	813539	CS M10-1.25 x 90	1
08	813534	COMPRESSOR, A/C	1
09	813542	CS M8-1.25 x 90 10.9	3

a *Used when machine is equipped with A/C option; refer to previous page for the "standard" fan belt part number.*

silverhorn.co.uk

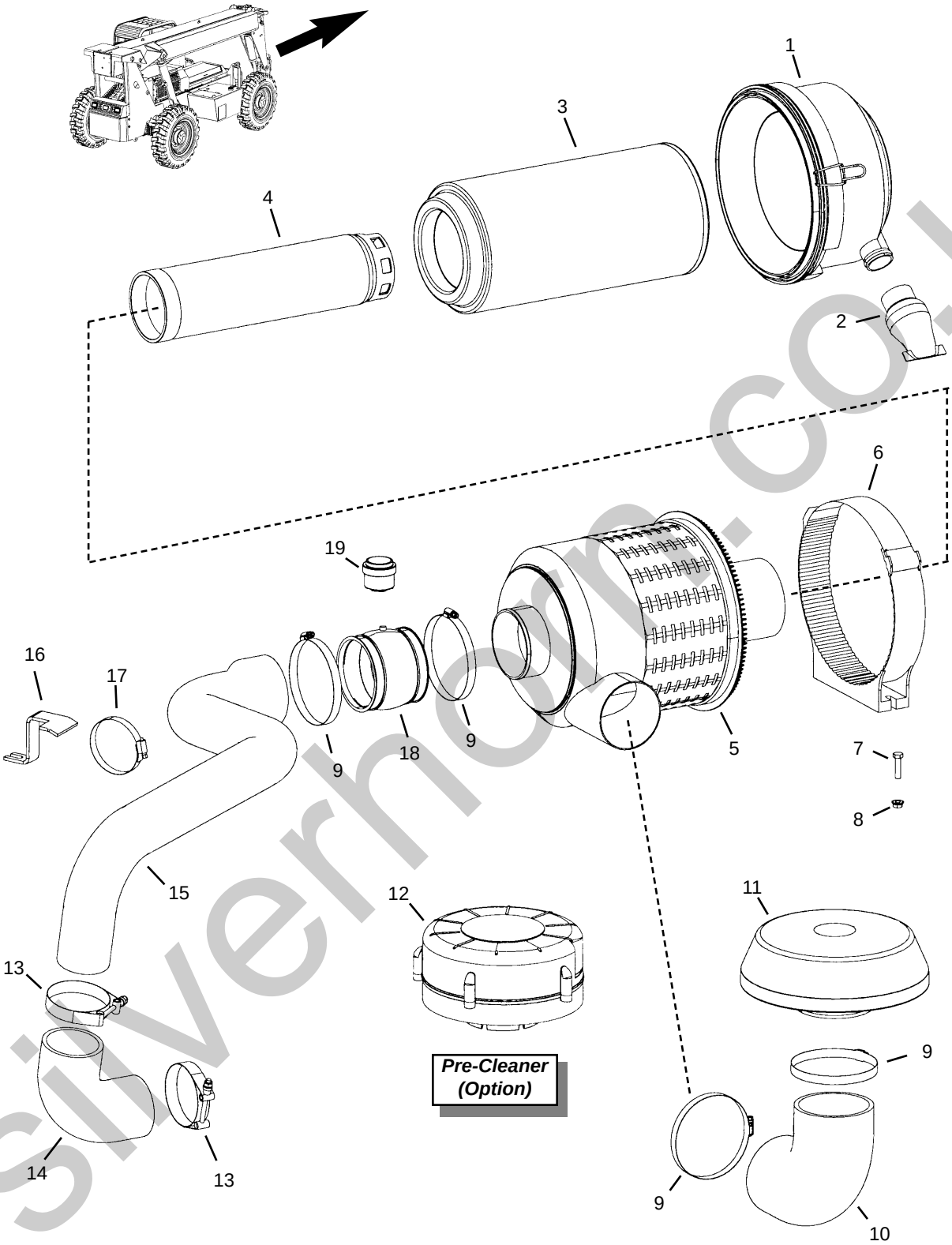

silverhome.co.uk

Ref. No.	Part No.	Description	Qty. Req.
--	51200134	AIR CLEANER ASSEMBLY. *(includes 1-5)*	1
01	NSS	END CAP	1
02	809381	EJECTOR/DUST	1
03	809825	ELEMENT, PRIMARY	1
04	809826	ELEMENT, SECONDARY	1
05	NSS	HOUSING, AIR CLEANER	1
06	813777	CLAMP, AIR CLEANER MOUNT	1
07	814344	5/6”X1-1/4” BOLT	2
08	808555	5/16” NUT	2
09	808659	ADJUST. CLAMP, #72	AR
10	808782	90º RUBBER ELBOW, 4” DIA.	1
11	809831	INLET HOOD/CAP	1
12	809308	PRE-CLEANER *(option)*	1
13	813776	CLAMP, T-BOLT 3-1/2”	2
14	808427	90º RUBBER ELBOW, 3” DIA.	1
15	51200135	AIR INTAKE TUBE	1
16	51200136	BRACKET, AIR INTAKE	1
17	808655	CLAMP, #52 SAE	AR
18	51200137	COUPLER, 4” w/TAP	1
19	809382	INDICATOR, RESTRICTION 30 in.	1

silverhorn.co.uk

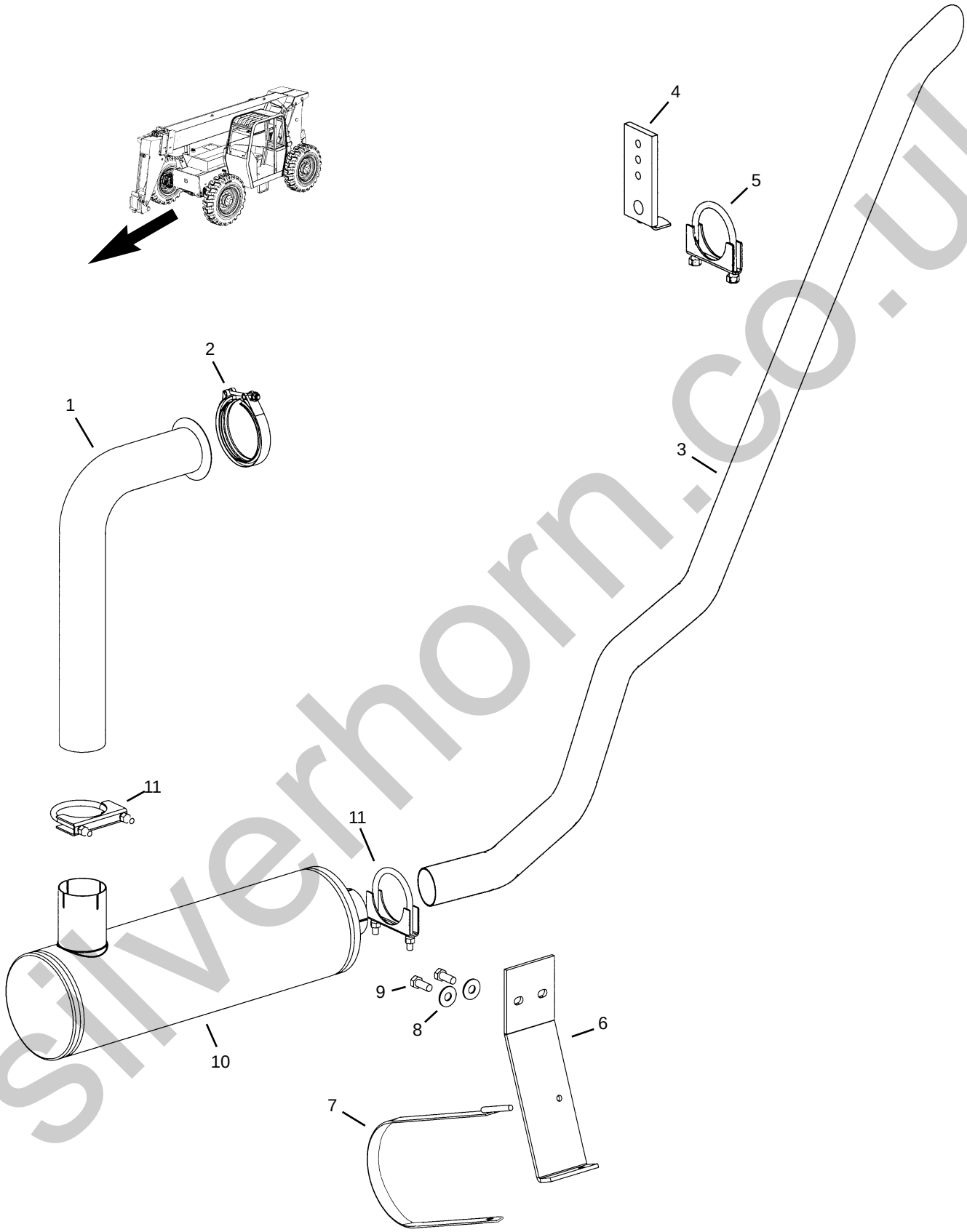

silverhorn.co.uk

Ref. No.	Part No.	Description	Qty. Req.
01	51200138	PIPE, OUTLET EXHAUST	1
02	809131	TURBO CLAMP	1
03	51200139	TAIL PIPE	1
04	808777	HANGER	1
	813713	3/8”-16X1-1/4” BOLT	1
	813591	3/8” FLAT WASHER	1
	808663	3/8”-16 NYLON INSERT NUT	1
05	808678	MUFFLER CLAMP 3”	1
06	808765	BRACKET	1
07	51200142	STRAP	1
	813574	3/8”-16X1” BOLT	1
	813591	3/8” FLAT WASHER	1
	808663	3/8”-16 NYLON INSERT NUT	1
08	808595	1/2” FLAT WASHER	2
09	809208	M12-1.75X30 C8 BOLT	2
10		MUFFLER / CATALYTIC PURIFIER	
	51200141	MUFFLER *(standard)*	1
	51200140	CATALYTIC PURIFIER *(option)*	1
11	808678	CLAMP 3”	2

silverhorn.co.uk

Radiator and Coolers - Part 1 of 2

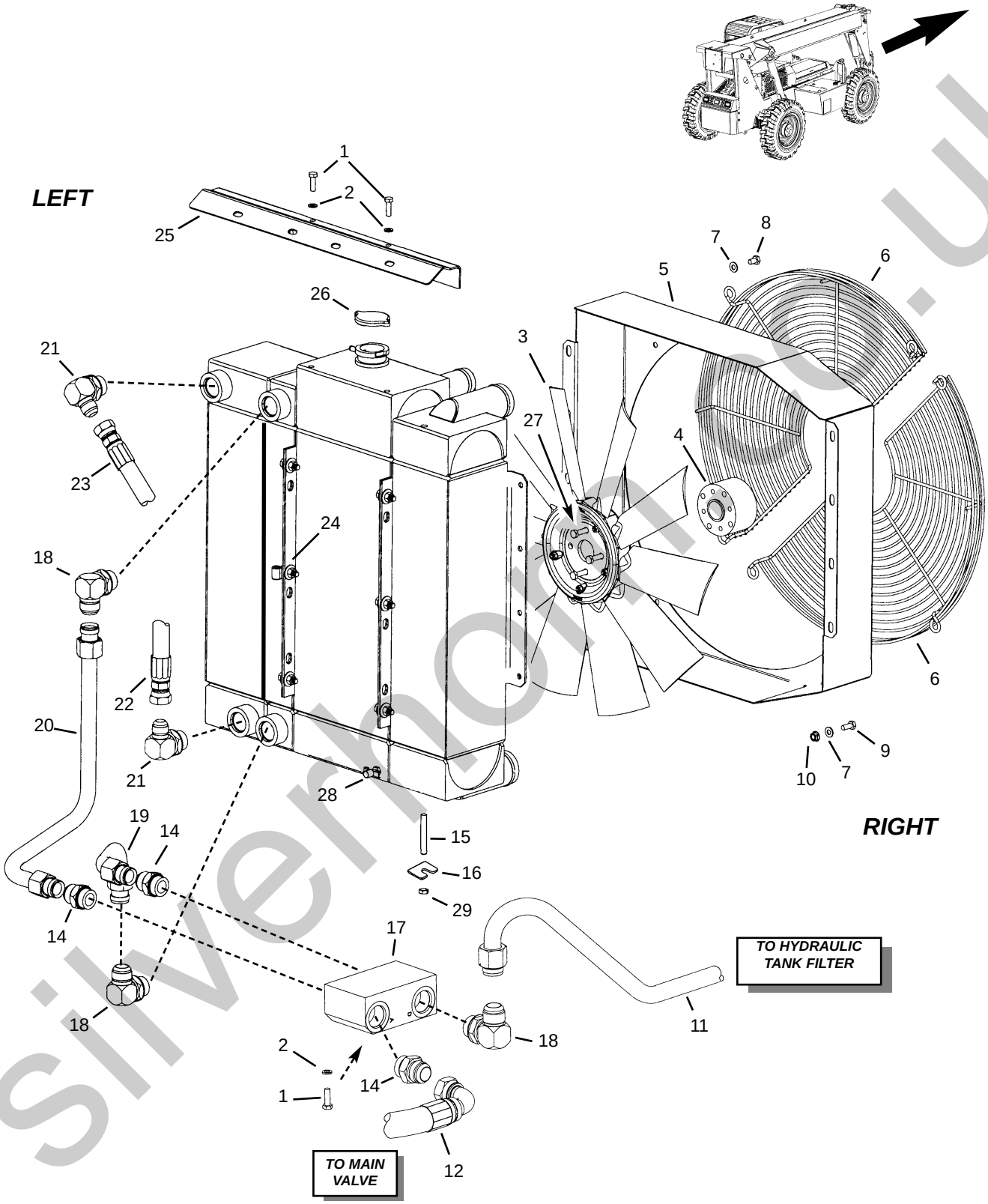

silvermoon.co.uk

Radiator and Coolers - Part 1 of 2

Ref. No.	Part No.	Description	Qty. Req.
01	813598	5/16”-18X1” BOLT	AR
02	808497	5/16” LOCK WASHER	AR
03	813739	FAN, SUCTION 22”	1
04	813738	SPACER, FAN 2”	1
05	51200143	FAN SHROUD	1
06	813728	FAN GUARD	2
07	813729	5/16” FLAT WASHER	AR
08	813531	5/16”X1/2” BOLT	AR
09	808498	5/16”X3/4” BOLT	AR
10	808555	5/16”-18 WHIZ NUT	AR
11	51200119	TUBE ASSEMBLY	1
12	51200144	HOSE, -16 A16/DS16 29”	1
14	814495	ADAP., -16ORM -16JICM ST.	4
15	51200145	3/8”-16X2” STUD	4
16	51200146	3/8” SHIM, SLOTTED	4
17	813850	COLD START BYPASS	1
18	813743	ADAP., -16ORM -16JICM 90º.	3
19	51200147	TUBE, LOWER (HOC)	1
20	51200148	TUBE, UPPER (HOC)	1
21	813746	ADAP., -16ORM -12JICM 90º.	2
22	808289	HOSE, -12 A12/DS12 102”	1
23	809540	HOSE, -12 A12/DS12 114”	1
24	813741	CLAMP, VINYL 3/8”	1
25	51200105	MOUNT, TOP HOOD	1
26	809832	RADIATOR CAP	1
27	813737	M10-1.5X70, BOLT	4
28	808433	RADIATOR DRAIN VALVE	1
29	51200053	3/8” FLANGE LOCK NUT	4

HOSE LOCATOR

12	COLD-START BY-PASS VALVE	MAIN HYDRAULIC VALVE *(rear port)*
22	TRANSMISSION COOLER *(lower port)*	TRANSMISSION *(left side - just under hyd. pump)*
23	TRANSMISSION COOLER *(upper port)*	TRANSMISSION *(top right side - near filter)*

silverhorn.co.uk

Radiator and Coolers - Part 2 of 2

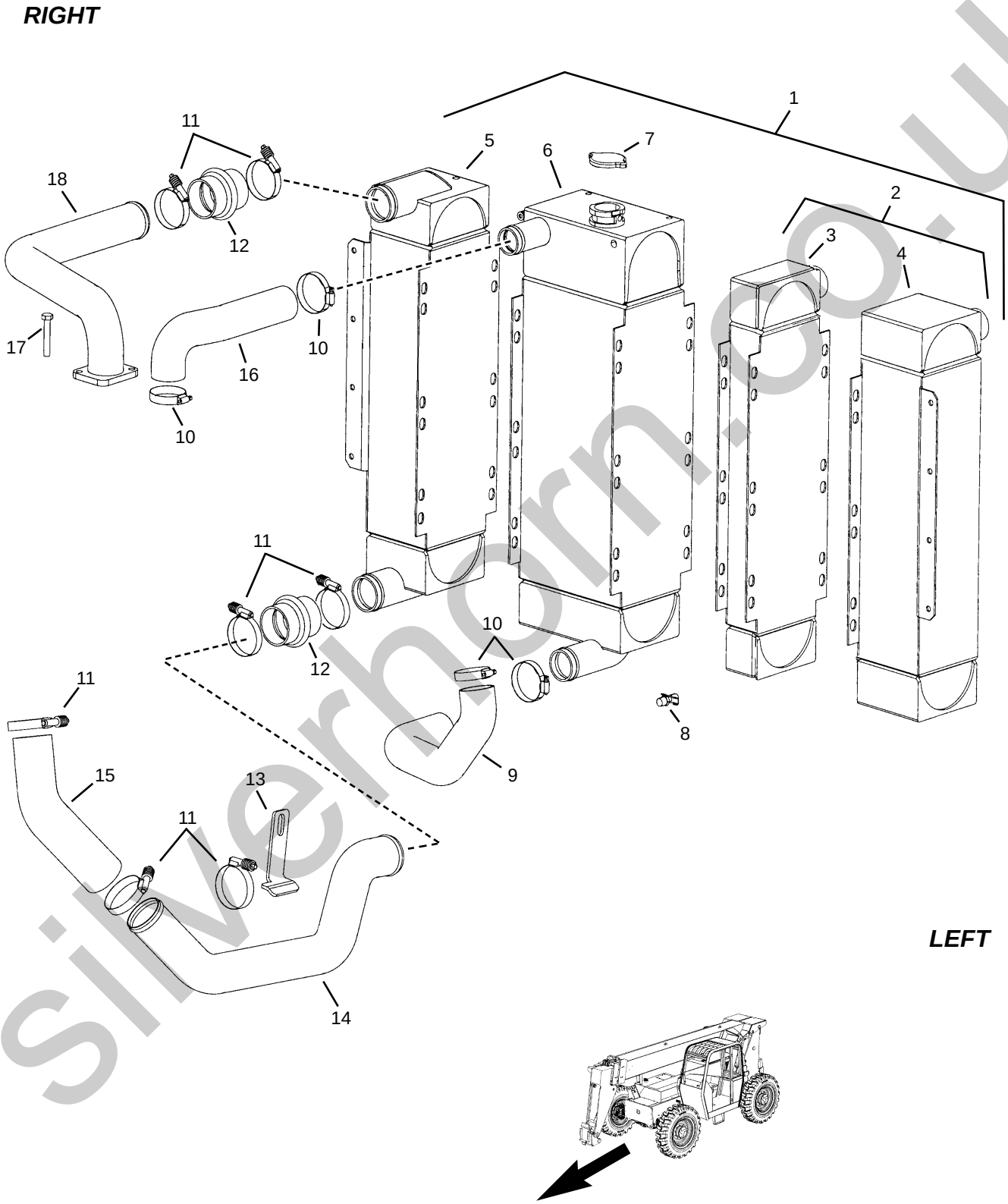

silverhorn.co.uk

Radiator and Coolers - Part 2 of 2

Ref. No.	Part No.	Description	Qty. Req.
01	51200149	RADIATOR/COOLER ASSEMBLY *(includes items 2-8)*	1
02	51200150	TRANS./HYD. COOLER ASSY. *(includes items 3 and 4)*	1
03	51200151	COOLER, HYDRAULIC *(section)*	1
04	51200152	COOLER, TRANSMISSION *(sect.)*	1
05	51200153	CHARGE AIR COOLER *(section)*	1
06[a]	51200154	RADIATOR *(section)*	1
07	809832	RADIATOR CAP, 16 lbs.	1
08	808433	RADIATOR DRAIN VALVE	1
09	809834	HOSE, LOWER RADIATOR	1
10	808947	HOSE CLAMP, #32 SAE	4
11	813761	CLAMP, HOSE #36 / TENSION	7
12	813765	HOSE, SILICONE 2-1/4”	2
13	51200155	BRACKET, PIPE SUPPORT	1
14	51200156	CAC LOWER TUBE	1
15	51200157	HOSE, 2” ID X 2-1/4” ID 45º	1
16	809835	HOSE, UPPER RADIATOR	1
17	51200158	SHCS M10-1.50x55 C10.9	2
18	51200159	UPPER CHARGE AIR TUBE	1
	813766	GASKET *(not shown)*	1

a *Radiator section, when purchased separately, does not include the radiator cap.*

silverhorn.co.uk

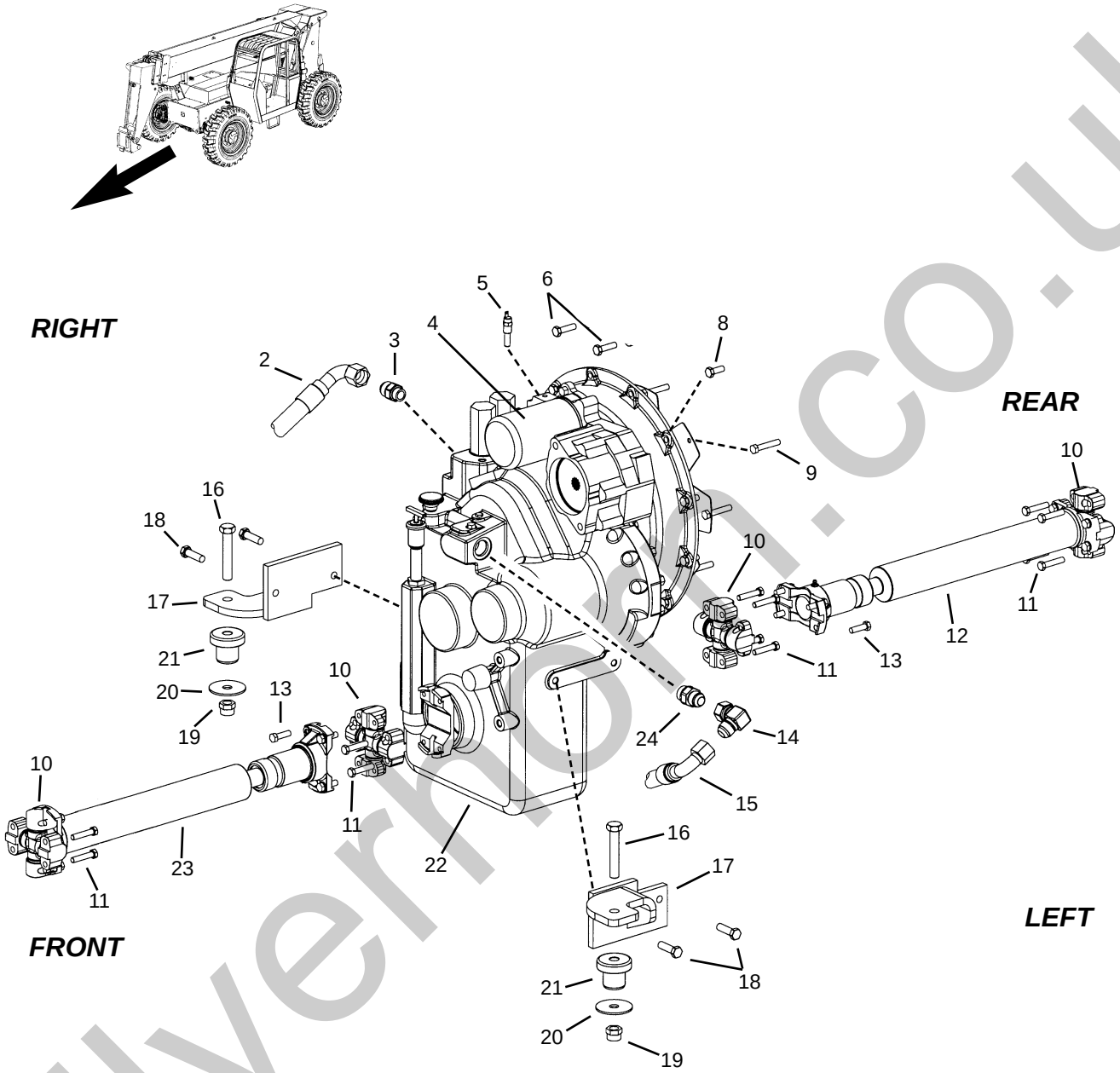

silverhorn.co.uk

Ref. No.	Part No.	Description	Qty. Req.
02	809540	HOSE, -12 DS12/A12 114”	1
03	51200160	ADAP., -10ORM -12JICM STR	1
04	808004	FILTER, TRANSMISSION OIL	1
05	808828	SENDER, TEMP 250º	1
06[d]	51200161	M10X1.5X60mm	2
08	51200162	M10X1.5X50mm	10
09[c]	808641	3/8”-24X2” GRADE 8 BOLT	8
10	809107	UNIVERSAL JOINT *(inclds. bolts)*	4
11[a]	808623	3/8”-24X1-3/4” GR8 BOLT	16
12	51200163	DRIVESHAFT, REAR *(includes u-joints)*	1
13[b]	808416	3/8”-24X1-1/4” GR 8 BOLT	8
	813849	3/8” LOCK WASHER	8
14	813704	ADAP., -12JICM -12JICFS 90º	1
15	808289	HOSE, -12 DM12/A12 102”	1
16	808615	5/8”-11X3-1/2” BOLT	2
17	51200164	TRANSMISSION MOUNT	2
18	809212	M12X1.75X40mm BOLT	4
19	808664	5/8”-11 NYLON INSERT NUT	2
20	808749	WASHER, ISOLATOR MOUNT	2
21	808744	MOUNT, VIBRATION ISOLATOR	2
22	51200165	TRANSMISSION, T13000	1
23	808114	DRIVESHAFT, FRONT *(includes u-joints)*	1
24	814326	ADAP., -12ORM -12JICM STR	1

a Used to fasten universal joint to transmission and to axle yokes.
b Used to fasten universal joint to driveshaft.
c Used to fasten flex plate to flywheel.
d Used to fasten wire harness bracket to transmission.

silverhorn.co.uk

HOSE LOCATOR

02	TRANSMISSION *(top right side - near filter)*	TRANSMISSION COOLER *(upper port)*
15	TRANSMISSION *(left side - just under hyd. pump)*	TRANSMISSION COOLER *(lower port)*

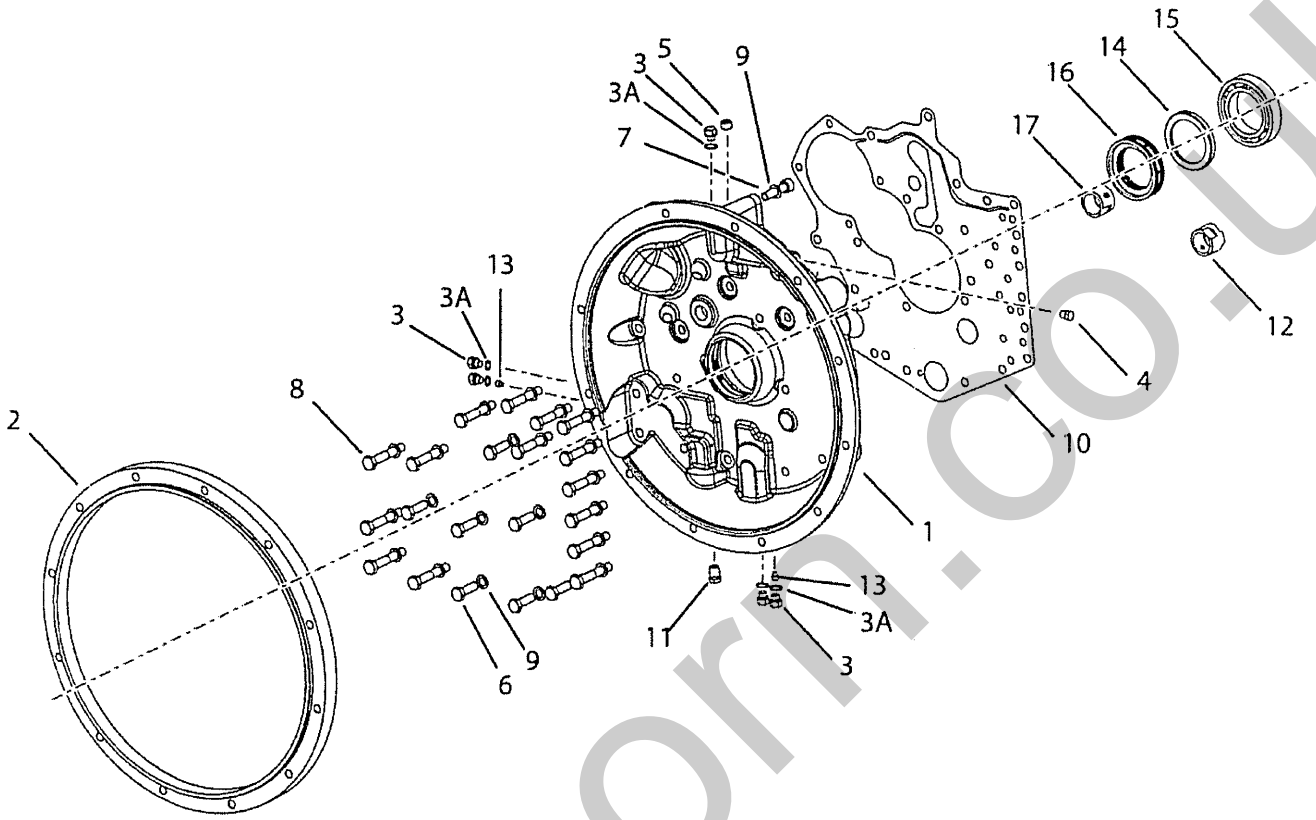

Ref. No.	Part No.	Description	Qty. Req.
01		CONVERTER HOUSING	1
	51200166	*Trans. model # 1217FT13465-11*	
	50220019	*Trans. model # 1217FT13465-13*	
02		SPACER	1
	51200168	*Trans. model # 1217FT13465-11*	
	Not Used	*Trans. model # 1217FT13465-13*	
03	51200170	PLUG	5
	809118	O-RING	5
04	809213	PLUG, REGULATOR PRESS SIDE	1
05	809115	PLUG, CHECK VALVE	1
06	809119	SCREW	6
07	809215	SCREW	1
08	809214	SCREW	16
09	809096	LOCK WASHER	23
10	809078	GASKET	1
11	809216	PLUG	1
12	51200169	SLEEVE, OIL	1
13	809016	SCREW	2
14	808971	SEAL	1
15	808974	BALL BEARING	1
16	808972	RING	1
17	809022	SLEEVE, OIL	1

silverhorn.co.uk

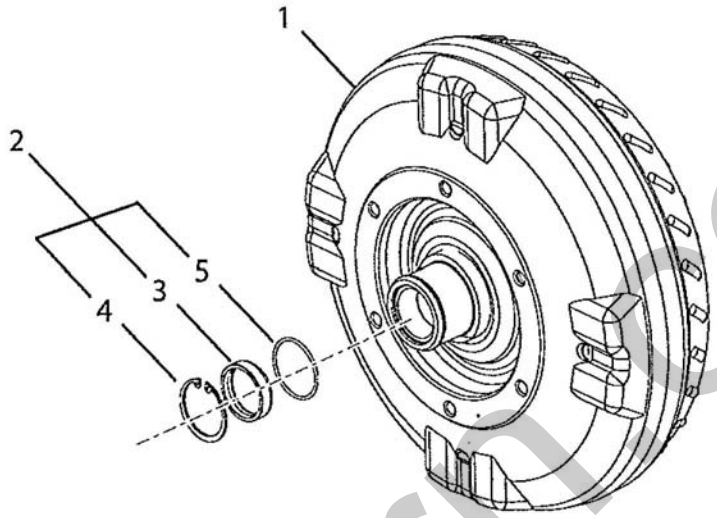

Ref. No.	Part No.	Description	Qty. Req.	Ref. No.	Part No.	Description	Qty. Req.
01	51200171	TORQUE CONVERTER	1	03	51200173	PLUG	1
02	50220012	KIT, TORQUE CONVERTER PLUG *(includes items 3, 4 and 5)*	1	04	51200174	SNAP RING	1
				05	51200175	O-RING	1

silverhorn.co.uk

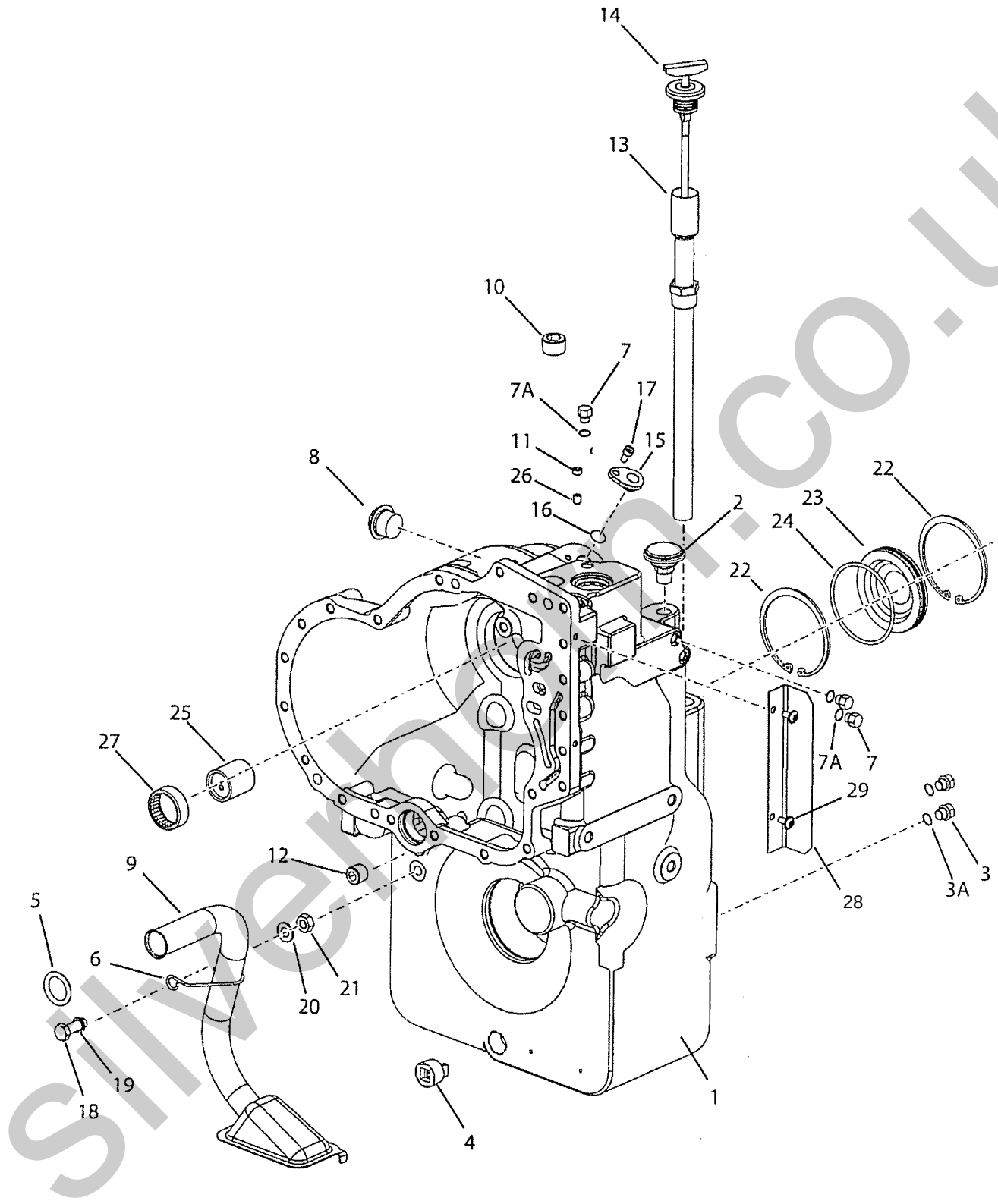

silverhall.co.uk

Ref. No.	Part No.	Description	Qty. Req.
01		CASE-TRANSMISSION	1
	51200176	*Trans. model # 1217FT13465-11*	
	50220010	*Trans. model # 1217FT13465-13*	
02	808953	AIR BREATHER / VENT	1
03	809217	PLUG	2
	809095	O-RING	2
04	809114	PLUG / MAGNETIC	1
05	808968	RING / OIL SUPPLY TUBE	1
06	808966	CLIP / OIL SUPPLY TUBE	1
07	51200170	PLUG	3
	809118	O-RING	3
09	808967	ASSY. / TUBE AND SCREEN	1
10	809219	PLUG	1
11		PLUG	1
	814008	*Trans. model # 1217FT13465-11*	
	809213	*Trans. model # 1217FT13465-13*	
12	51200178	PLUG	1
13	809071	TUBE / DIPSTICK	1
14	809072	ASSY. DIPSTICK	1
15	51200179	PLUG / SPEED SENSOR	1
16	51200180	O-RING / SPEED SENSOR	1
17	809122	SCREW	1
18	809119	BOLT	1
19	809123	WASHER / SEAL	1
20	51200181	WASHER	1
21	809221	NUT	1
22	51200182	SNAP RING	2
23	51200185	PLUG	1
24	809021	O-RING	1
25	809013	SLEEVE	1
26	809229	SET SCREW	1
27		BEARING	1
	809011	*Trans. model # 1217FT13465-11*	
	50220011	*Trans. model # 1217FT13465-13*	
28	51200183	PLATE	1
29	51200184	BOLT, SOCKET HEAD M6	2

silverhorn.co.uk

Spacer Plate

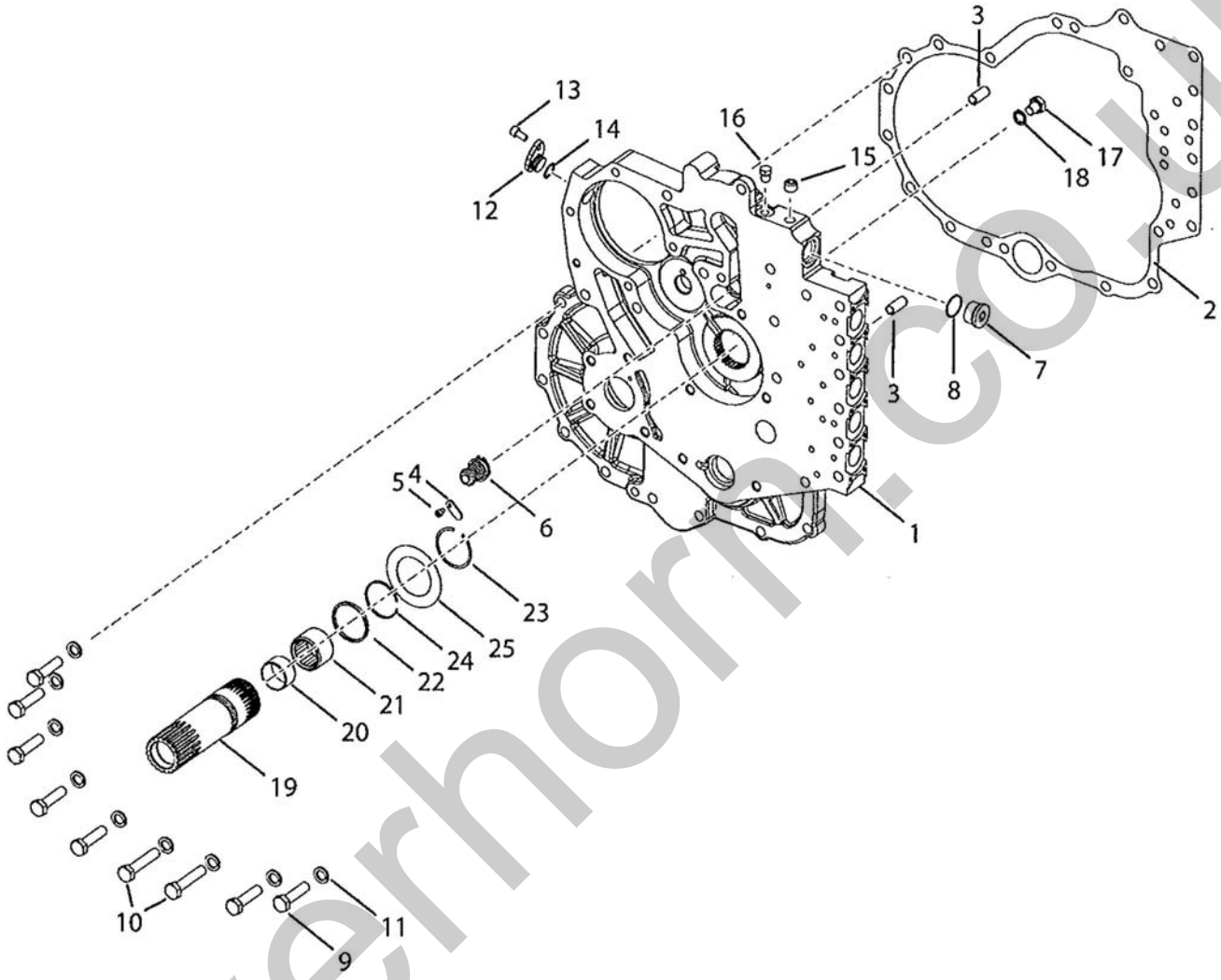

silverhorn.co.uk

Spacer Plate

Ref. No.	Part No.	Description	Qty. Req.
01	51200187	PLATE, SPACER	1
02	809074	GASKET	1
03	809075	PIN, ROLL	2
04	51200188	PLATE, LOCK	1
05	51200189	BOLT	1
06	51200190	SAFETY VALVE ASSEMBLY	1
07	51200191	PLUG *(includes item 8)*	1
08	51200192	O-RING	1
09	809218	BOLT	7
10	809099	BOLT	2
11	809096	LOCK WASHER	9
12	51200179	PLUG, SPEED SENSOR	1
13	809122	BOLT	1
14	51200180	O-RING, SPEED SENSOR	1
15	809213	PIPE PLUG	1
16	809115	PLUG	1
17	51200193	BOLT	1
18	809123	WASHER	1
19	51200171	ASSY., STATOR SUPPORT *(includes items 3 and 4)*	1
20	808980	BUSHING	1
21	808973	BEARING, NEEDLE	1
22	808977	RING, PISTON	1
23	808976	SNAP RING	1
24	808978	EXPANDER SPRING	1
25	808981	WASHER, THRUST	1

silverhorn.co.uk

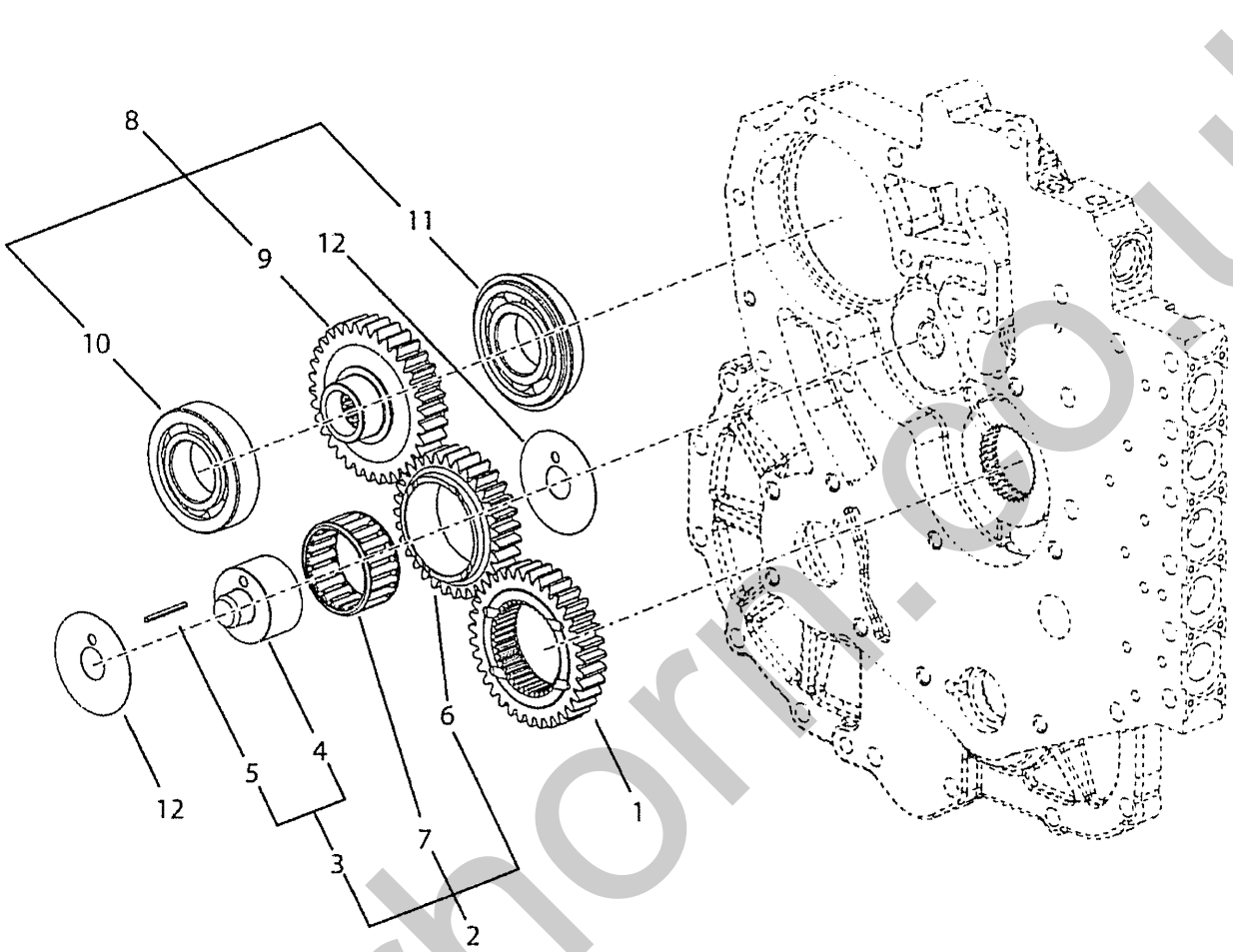

Ref. No.	Part No.	Description	Qty. Req.
01	51200198	GEAR, IMPELLER	1
02	51200194	ASSY., PUMP DRIVE IDLER *(includes items 3, 6 and 7)*	1
03	51200195	ASSY., PUMP DRIVE SHAFT *(includes items 4 and 5)*	1
04	51200196	SHAFT, PUMP DRIVE IDLER	1
05	51200197	PIN, ROLL	1
06	51200199	GEAR, PUMP DRIVE (31T)	1
07	809080	BEARING , NEEDLE	1
08	51200200	ASSY., PUMP DRIVE GEAR *(includes items 9, 10 and 11)*	1
09	51200201	GEAR, PUMP DRIVE	1
10	51200202	BEARING, BALL	1
11	51200203	BEARING, BALL	1
12	809079	WASHER, THRUST	2

silverhorn.co.uk

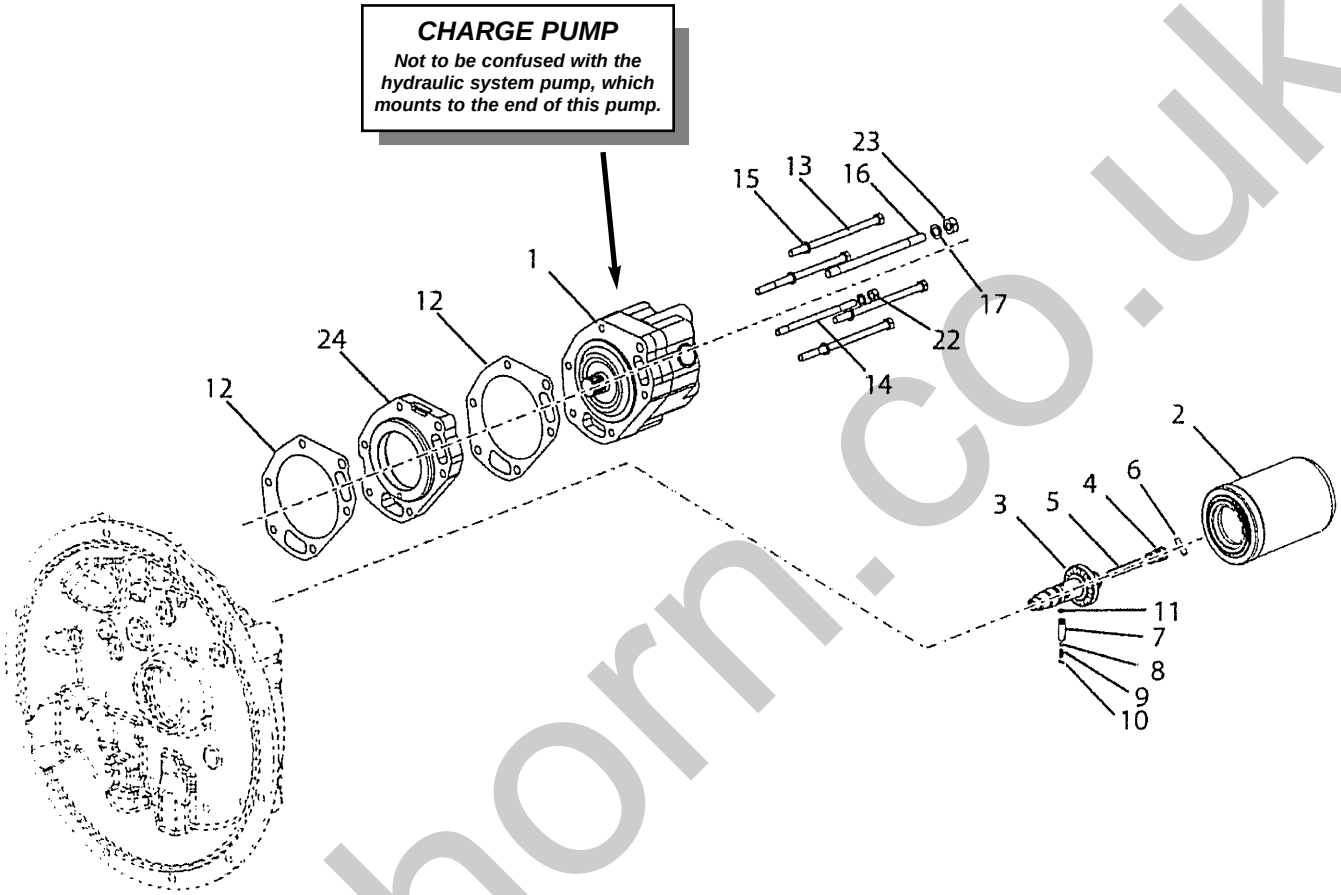

Ref. No.	Part No.	Description	Qty. Req.
01[a]	808990	CHARGE PUMP	1
02	808004	HYD. SPIN FILTER	1
03	51200204	REGULATOR VALVE *(includes items 4-6)*	1
04	51200205	PISTON, REGULATOR VALVE	1
05	809087	SPRING	1
06	808991	NEEDLE, ROLLER	1
07	809087	ASSY., BALL CHECK VALVE *(includes items 8-11)*	1
08	808985	BALL	1
09	808986	SPRING	1
10	808984	PIN, ROLL	1
11	809084	O-RING	1
12	808989	GASKET, CHARGE PUMP	1
13	51200206	BOLT	4
14	51200207	STUD	1
15	809225	LOCK WASHER	5
16	51200208	STUD	1
17	809096	LOCK WASHER	1
22	51200209	NUT	1
23	809221	NUT	1
24	51200210	ADAPTER, PUMP TO PLATE	1

a **NOTE:** *This is the charge pump for the transmission, not the hydraulic pump for the hydraulic system; refer to the Hydraulic section for information regarding the hydraulic pump.*

silverhorn.co.uk

Reverse Idler

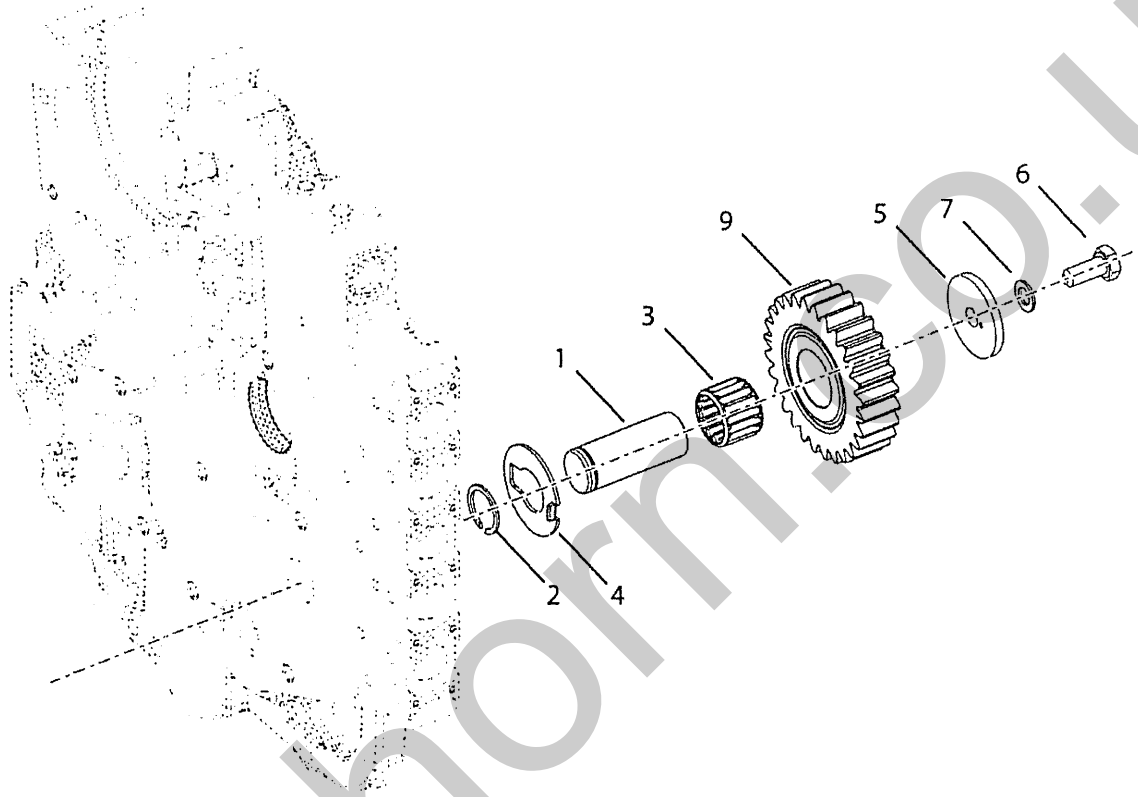

Ref. No.	Part No.	Description	Qty. Req.
01	808994	SHAFT IDLER & PILOT	1
02	808993	RING/SNAP	1
03	808996	BEARING/REV IDLER GEAR	1
04	808995	WASHER/THRUST	1
05	808997	END PLATE	1
06	809227	CAPSCREW	1
07	809228	WASHER	1
09	51200211	GEAR, REVERSE IDLER (28T)	1

silverhorn.co.uk

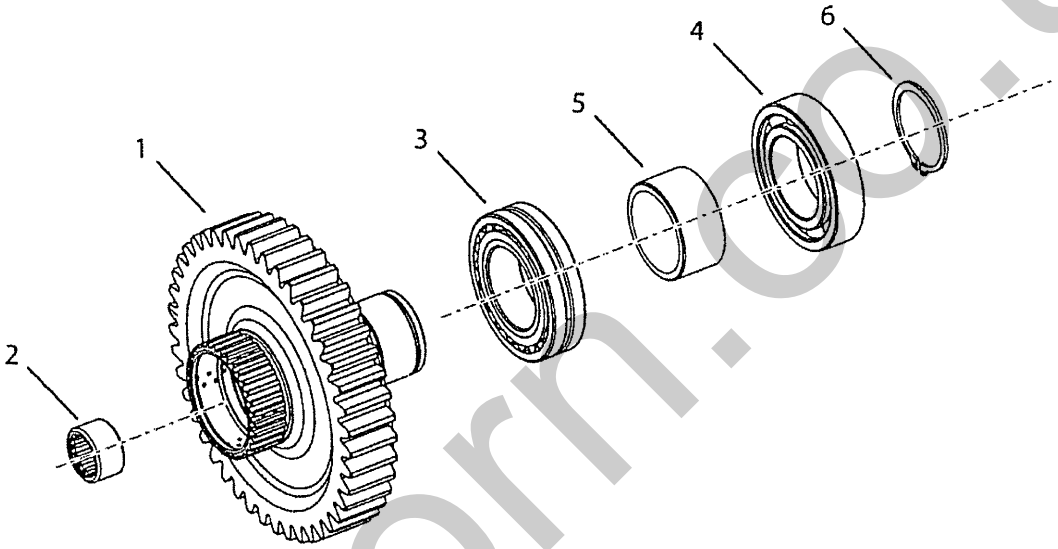

Ref. No.	Part No.	Description	Qty. Req.	Ref. No.	Part No.	Description	Qty. Req.
01	51200212	GEAR, 3RD CLUTCH (43T)	1	04	51200214	BEARING	1
02	51200216	BEARING, NEEDLE	1	05	51200215	SPACER, BEARING	1
03	51200213	SPHERICAL BEARING	1	06	809020	SNAP RING	1

silverhorn.co.uk

Forward and Reverse Shaft

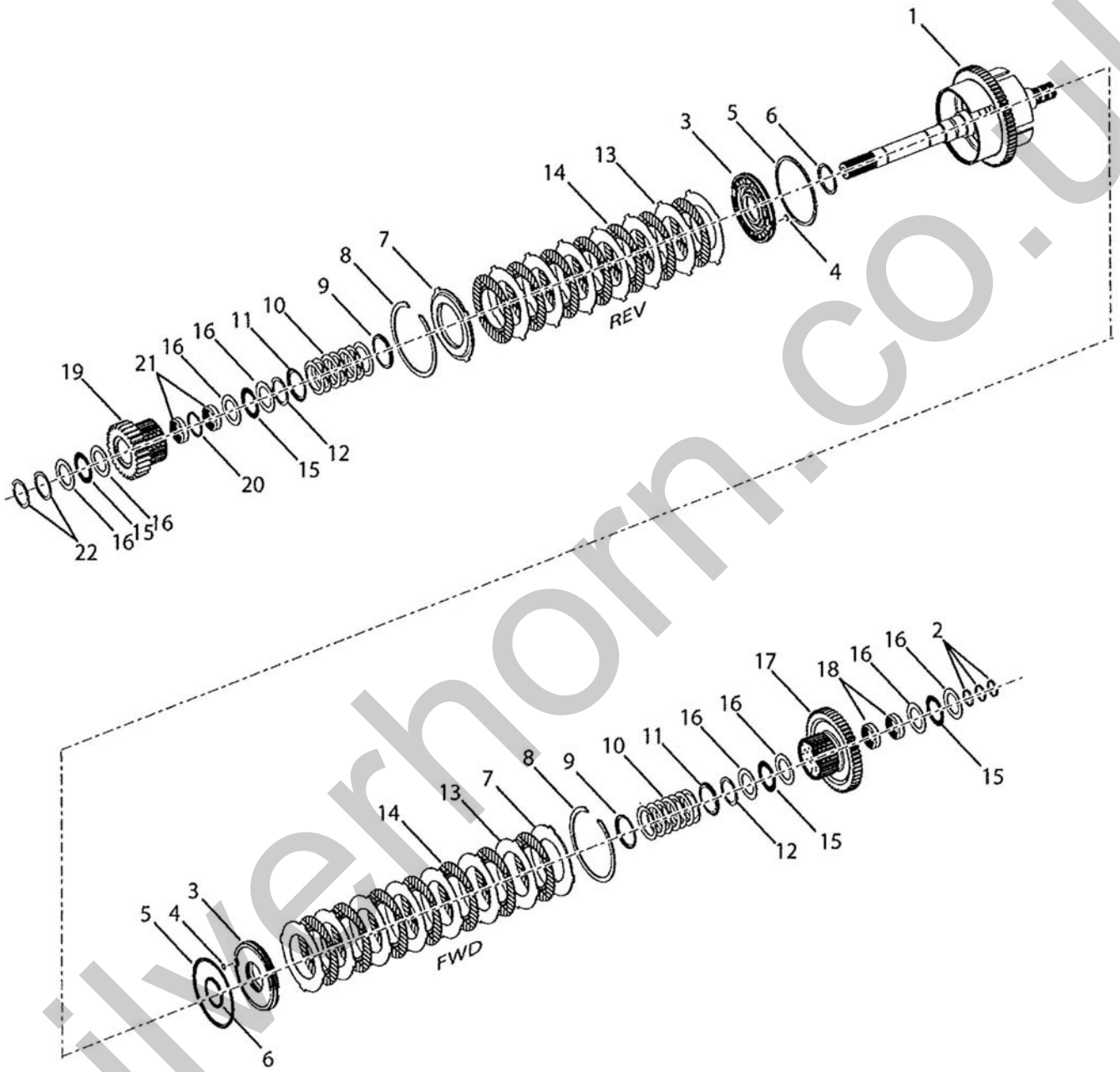

silverhorn.co.uk

Ref. No.	Part No.	Description	Qty. Req.
01		ASY/TURB SHFT DRUM & PLUG	1
	51200217	*Trans. model # 1217FT13465-11*	
	50220013	*Trans. model # 1217FT13465-13*	
02	809012	RING/PISTON	3
03	809116	ASSY., CLUTCH PISTON	2
		(includes items 4 -6)	
04	NSS	SCREEN	1
05	809008	SEAL	1
06	809009	SEAL	1
07	51200219	PLATE, END	2
08	809001	INTERNAL SNAP RING	2
09	809007	PLATE, CLUTCH PISTON WEAR	2
10	51200227	ASSY., DISC SPRING (7 springs)	2
11	809006	RETAINER, SNAP RING	2
12	809005	SNAP RING, RETAINER	2
13	51200220	DISC, OUTER	14
		(Seven discs in forward clutch and seven discs in reverse clutch)	
14		DISC, INNER	14
		(Seven discs in forward clutch and seven discs in reverse clutch)	
	809003	*Trans. model # 1217FT13465-11*	
	50220014	*Trans. model # 1217FT13465-13*	
15	809000	BEARING, THRUST	4
16	808999	WASHER, THRUST	8
17		CLUTCH FWD GEAR & BEARING	1
		(includes item 18)	
	51200223	*Trans. model # 1217FT13465-11*	
	50220015	*Trans. model # 1217FT13465-13*	
18	809014	BEARING, NEEDLE	2
19	51200224	REVERSE GEAR ASSY.	1
		(includes items 20 and 21)	
20	51200225	SPACER	1
21	809014	BEARING, NEEDLE	2
22	51200226	SNAP RING	2

silverhorn.co.uk

High and Third Gear Shaft

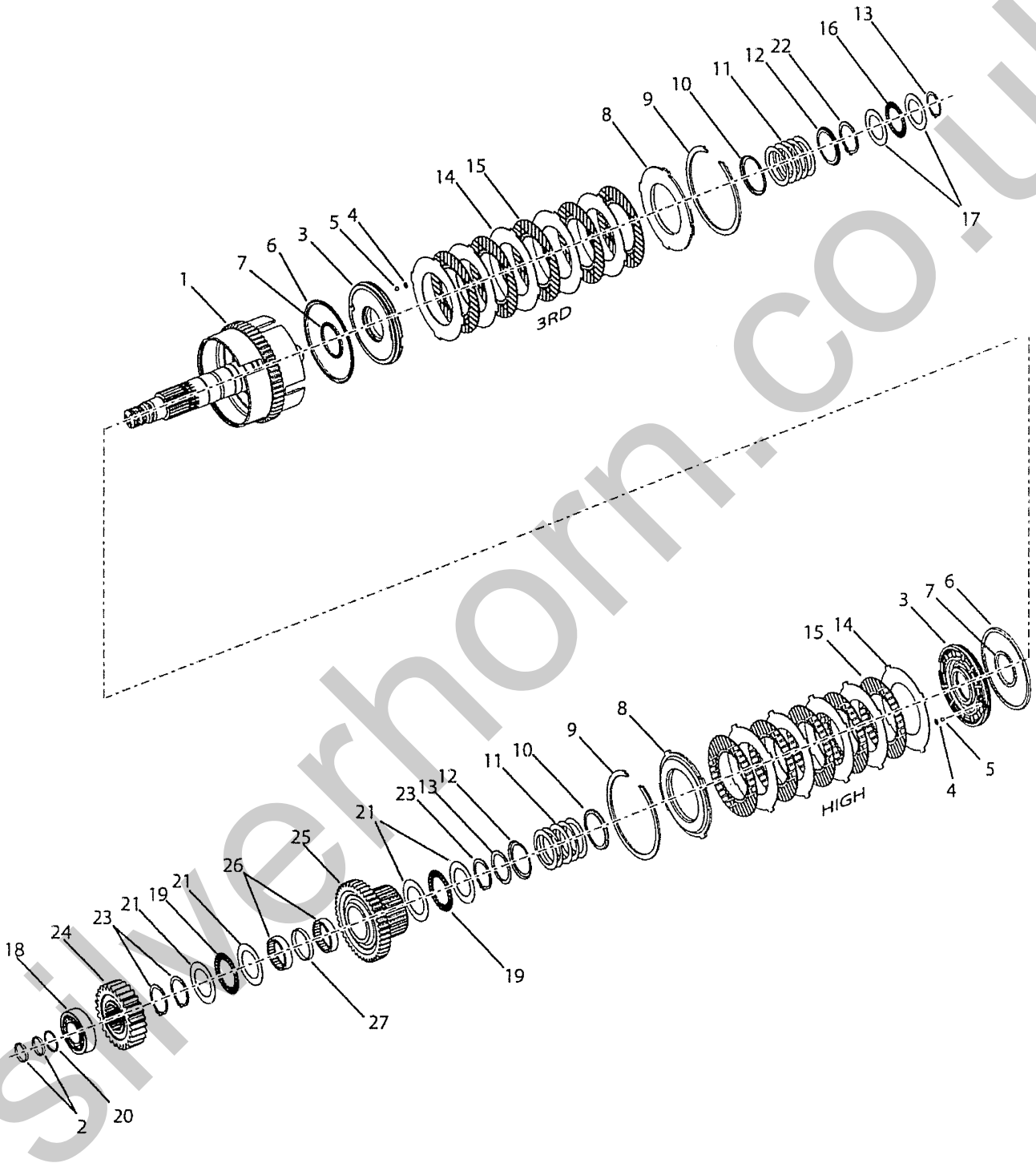

silverhorn.co.uk

Ref. No.	Part No.	Description	Qty. Req.
01	51200228	HIGH-THIRD SHAFT	1
02	809012	RING, PISTON	2
03	809117	ASSY., CLUTCH PISTON *(includes items 4-7)*	2
04	NSS	SEAT, BALL	1
05	NSS	BALL	1
06	809008	SEAL	1
07	809009	SEAL	1
08	51200219	PLATE, END	2
09	809001	INTERNAL SNAP RING	2
10	809007	PLATE, CLUTCH PISTON	2
11	809092	ASSY., DISC SPRING *(includes 5 disc-springs)*	2
12	809006	RETAINER, SNAP RING	2
13	809005	SNAP RING, RETAINER	2
14	51200220	DISC, OUTER *(Five outer discs in high and five outer discs in third)*	10
15		DISC, INNER *(Five inner discs in high and five inner discs in third)*	10
	809003	*Trans. model # 1217FT13465-11*	
	50220014	*Trans. model # 1217FT13465-13*	
16	809000	BEARING, THRUST	1
17	808999	WASHER, THRUST	2
18	51200238	BEARING, ROLLER	1
19	808513	BEARING, THRUST	2
20	51200239	RING, PISTON	1
21	808514	WASHER, CLUTCH GEAR	4
22	51200240	SNAP RING	1
23	809132	SNAP RING, EXTERNAL	3
24	51200241	GEAR, FIRST DRIVE (27T)	1
25	51200242	ASSY., HIGH GEAR *(includes items 26 and 27)*	1
26	51200232	BEARING, NEEDLE	2
27	51200243	SPACER	1

silverhorn.co.uk

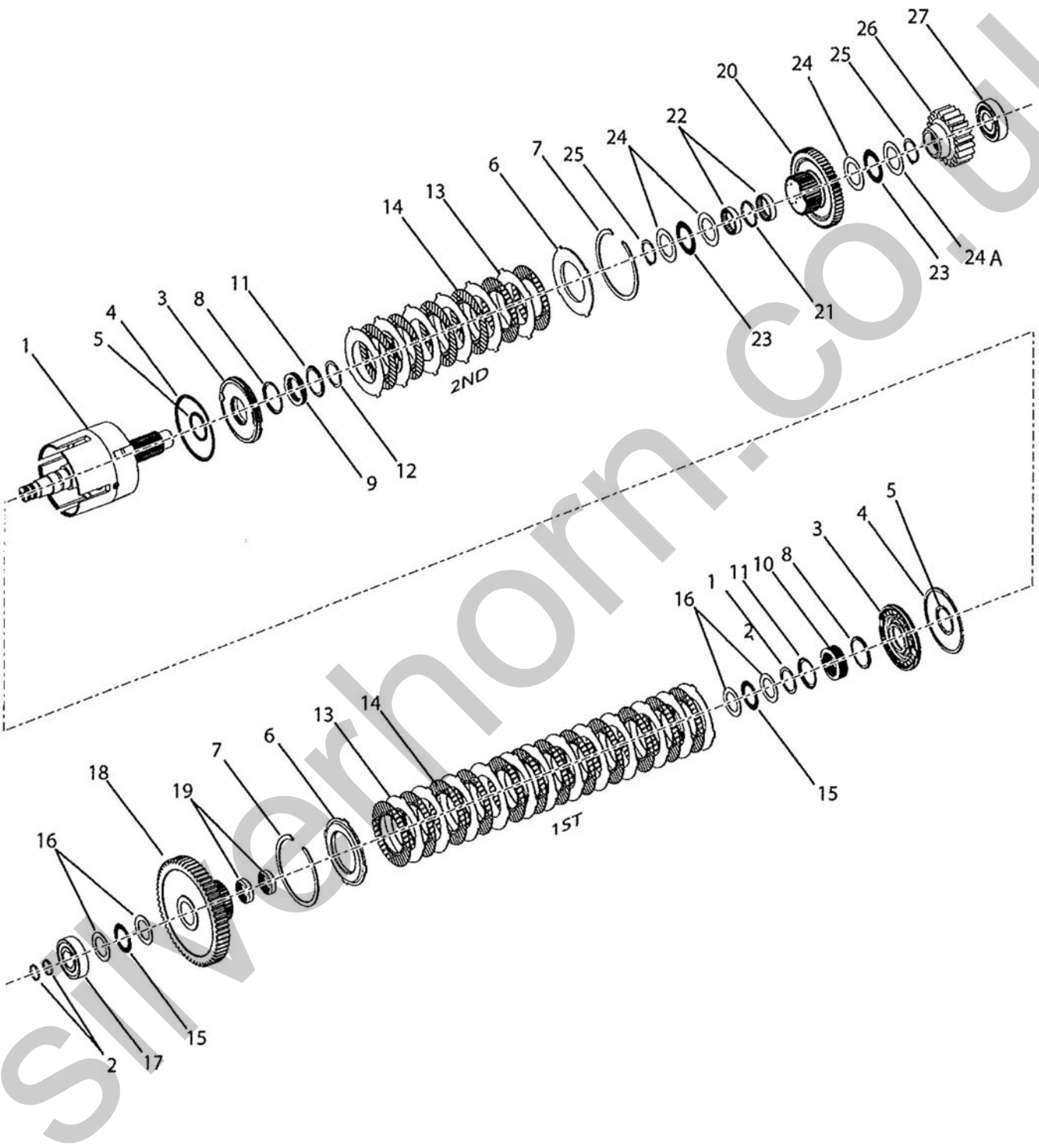

silverhorn.co.uk

Ref. No.	Part No.	Description	Qty. Req.
01		ASY-1ST 2ND SHAFT	1
	51200236	*Trans. model # 1217FT13465-11*	
	50220016	*Trans. model # 1217FT13465-13*	
02	809012	RING, PISTON	2
03	809098	ASSY., CLUTCH PISTON	2
04	809008	SEAL, CLUTCH PISTON OUTER	1
05	809009	SEAL, CLUTCH PISTON INNER	1
06	51200219	PLATE, END	2
07	809001	INTERNAL SNAP RING	2
08	809007	PLATE, CLUTCH PISTON	2
09	809092	ASSY., DISC SPRING	1
10	51200229	ASSY., DISC SPRING	1
11	809006	RETAINER, SNAP RING	1
12	809005	SNAP RING, RETAINER	1
13	51200220	DISC, OUTER	18
14		DISC, INNER	18
	809003	*Trans. model # 1217FT13465-11*	
	50220014	*Trans. model # 1217FT13465-13*	
15	809000	BEARING, THRUST	2
16	808999	WASHER, THRUST	2
17	808503	ASSY., BEARING AND SEAL	1
18	51200230	ASSY., 1ST CLUTCH GEAR	1
		(includes item 18)	
19	809014	BEARING , NEEDLE	1
20	51200231	ASSY., 2ND CLUTCH GEAR	1
		(includes items 21 and 22)	
21	51200244	SPACER	1
22	51200232	BEARING, NEEDLE	2
23	808513	BEARING, THRUST	2
24	808514	WASHER, CLUTCH GEAR	
		Trans. model # 1217FT13465-11	4
		Trans. model # 1217FT13465-13	3
24A	50220017	WASHER, CLUTCH GEAR	
		Trans. model # 1217FT13465-13	1
25	809132	SNAP RING EXTERNAL	2
26		GEAR, 3RD DRIVEN (21T)	1
	51200234	*Trans. model # 1217FT13465-11*	
	50220018	*Trans. model # 1217FT13465-13*	
27	809024	BEARING, ROLLER	1

silverhorn.co.uk

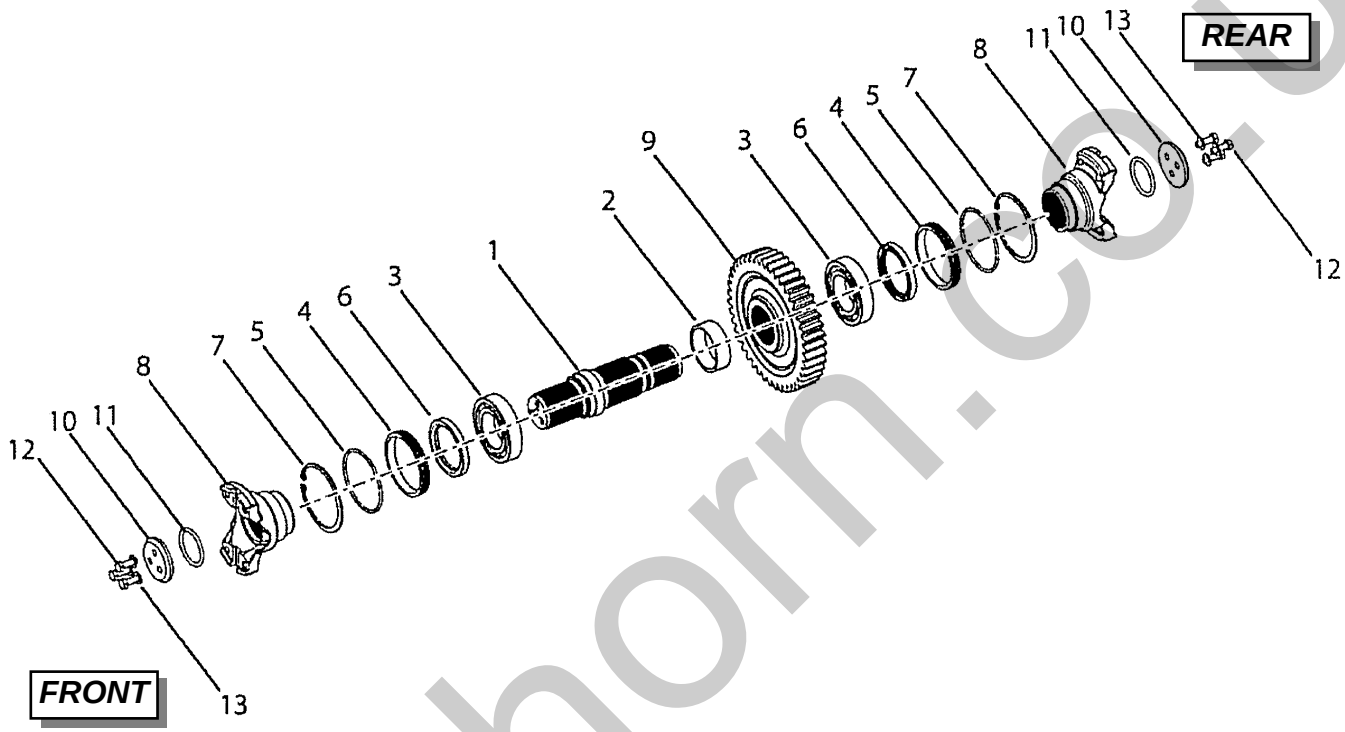

Ref. No.	Part No.	Description	Qty. Req.
01	51200245	SHAFT, OUTPUT	1
02	51200246	SPACER, GEAR TO SHAFT	1
03	51200214	BEARING	2
04	809029	SLEEVE, OIL SEAL	2
05	809021	O-RING	2
06	808954	SEAL, OIL	2
07	51200182	SNAP RING	2
08	51200247	FLANGE, OUTPUT SHAFT	2
09	51200248	GEAR, OUTPUT SHAFT (43T)	1
10	51200249	PLATE, OUTPUT FLANGE	2
11	51200250	O-RING OUTPUT SHAFT	2
12	51200251	BOLT	6
13	51200252	WASHER	6

silverhorn.co.uk

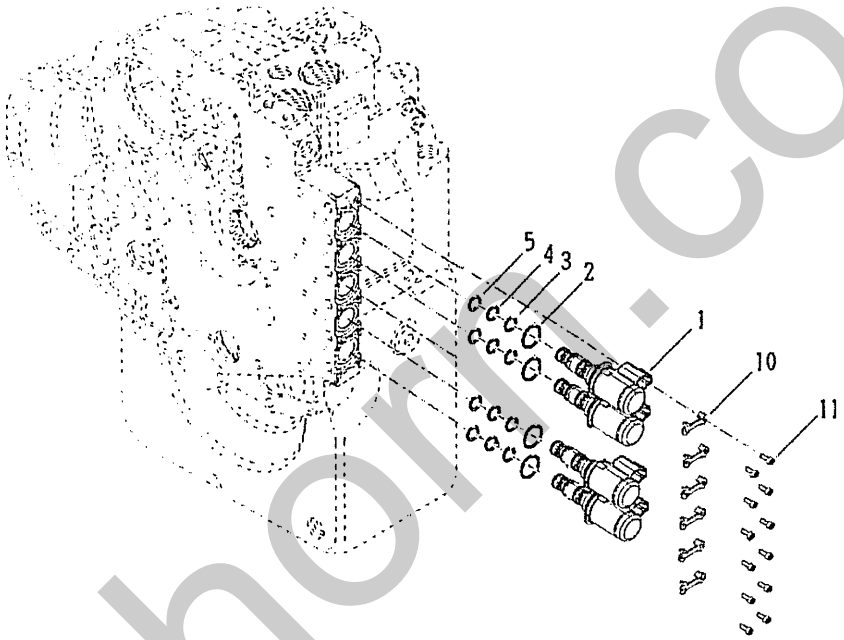

Ref. No.	Part No.	Description	Qty. Req.
01	808329	SOLENOID, W / DEUTSCH CON. *(includes items 2-5)*	5
02	808330	O-RING, 21.5 X 1.5MM *(included with item 1)*	AR
03	808331	O-RING, 15.1 X 1.60MM *(included with item 1)*	AR
04	808332	O-RING, 14.1 X 1.60MM *(included with item 1)*	AR
05	808333	O-RING, 12.1 X 1.60MM *(included with item 1)*	AR
10	808336	CLAMP, SOLENOID	6
11	808335	BOLT, WITH WASHER	12

silverhorn.co.uk

Drive Plate

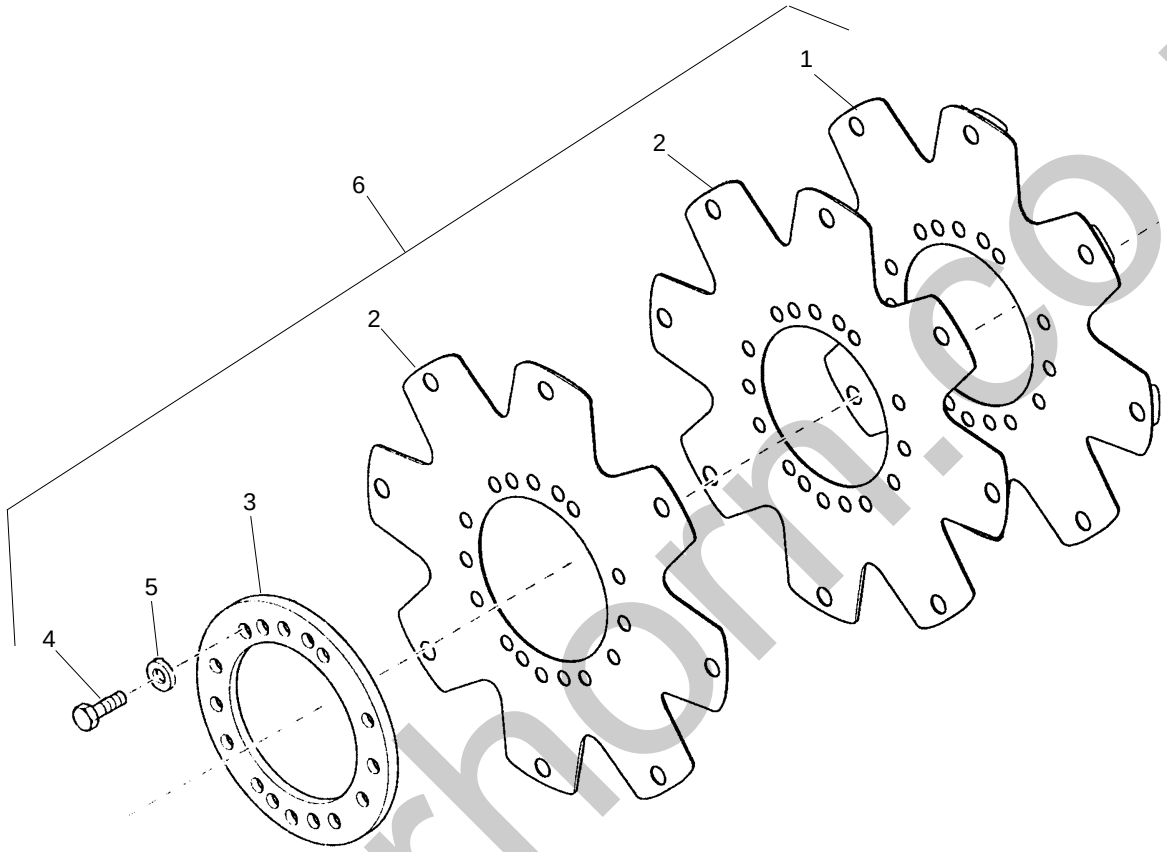

Ref. No.	Part No.	Description	Qty. Req.
01	NSS	ASSY/DRIVE PLATE	1
		(included in item 6)	
02	NSS	DRIVE PLATE	2
		(included in item 6)	
03	809044	RING/DRIVE PLATE BACKING	1
04	809133	SCREW/DRIVE PLATE MNTG	6
05	809097	LOCKWASHER/DRIVEPLATE	6
06	809045	KIT/DRIVE PLATE ASSY	1
		(includes items 1 thru 5)	

silverhorn.co.uk

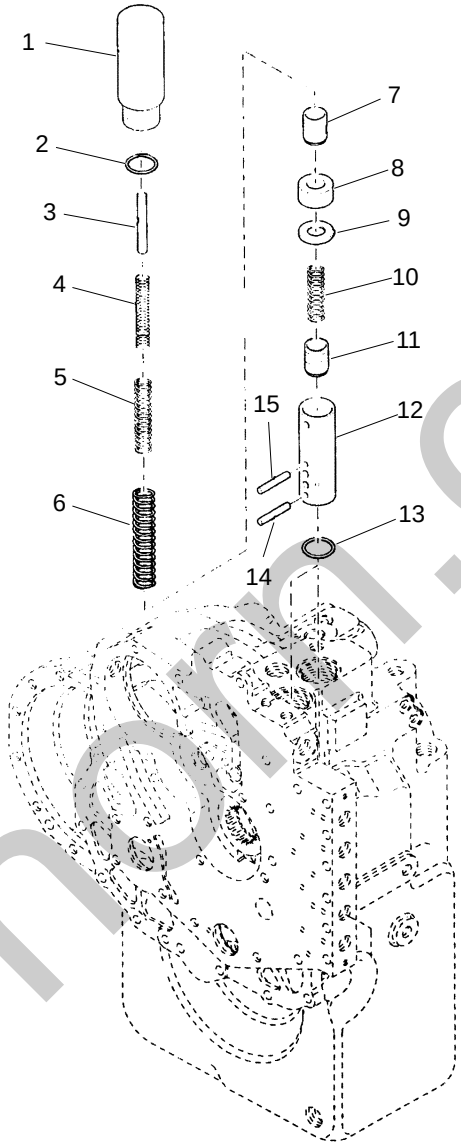

Ref. No.	Part No.	Description	Qty. Req.	Ref. No.	Part No.	Description	Qty. Req.
01	809032	HOUSING MODULATOR VALVE	2	09	809039	SPACER	2
02	809033	O-RING	2	10	809038	SPRING	2
03	809034	PIN STOP	2	11	809091	SPOOL	2
04	809035	SPRING INNER	2	12	809037	SLEEVE-MODULATION VALVE	2
05	809036	SPRING MIDDLE	2	13	51200253	O-RING, SLEEVE	2
06	809042	SPRING OUTER	2	14	809090	PIN-LOWER	2
07	809041	SPOOL ACCUMULATOR	2	15	809089	PIN-UPPER	2
08	809040	RETAINER	2				

silverhorn.co.uk

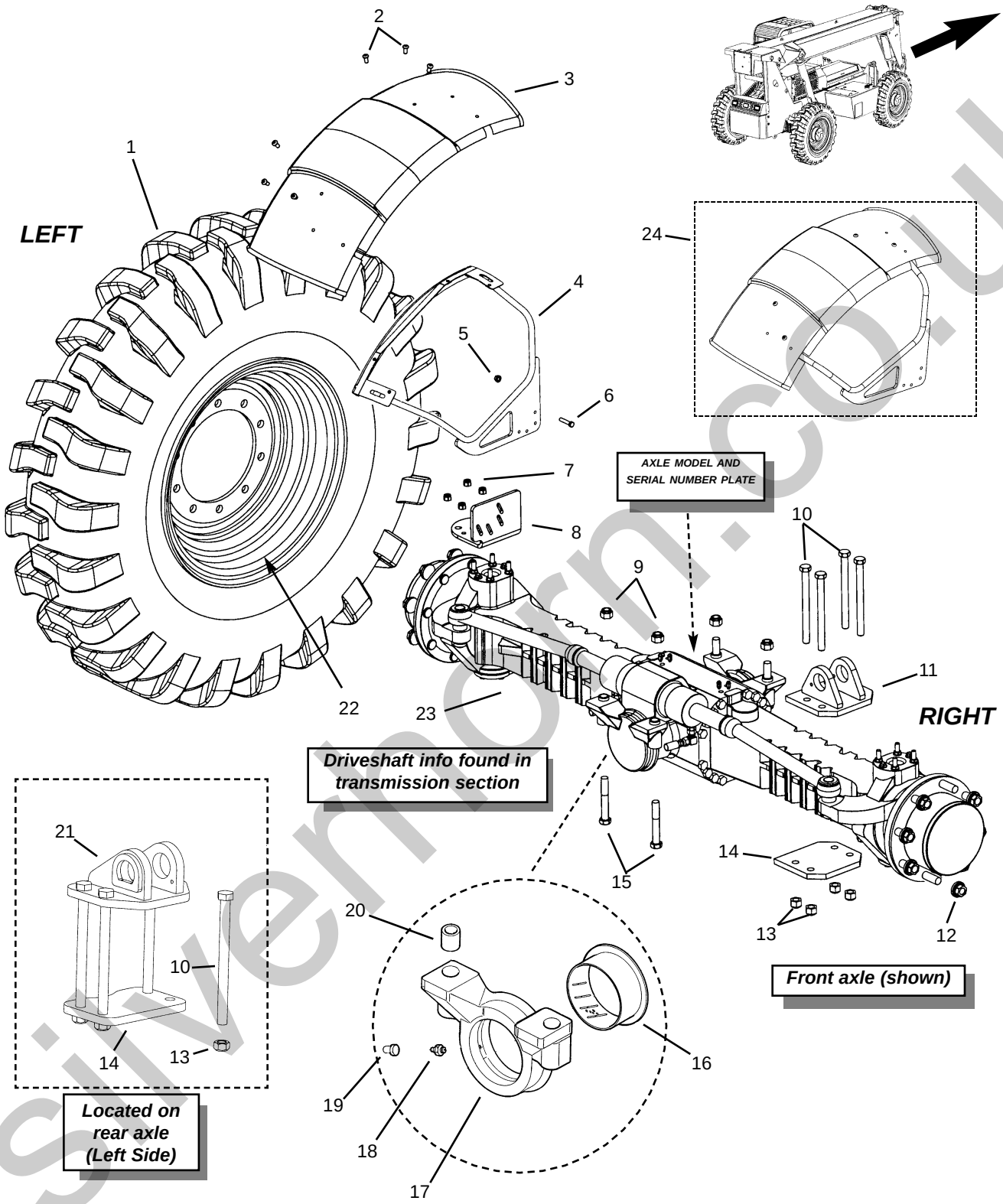

silvernorn.co.uk

Ref. No.	Part No.	Description	Qty. Req.
01	814021	TIRE/14.00X24TG 12PLY	4
	809234	WHEEL/24 X 9.00 GR	4
02[a]	808607	3/8”-16 BUTTON HD BOLT	6
03[a]	809164	FENDER	1
04[a]	814026	FENDER MOUNT (LF/RR)	1
	814025	FENDER MOUNT (RF/LR)	1
05[a]	51200053	3/8”-16 FLANGE LOCK NUT	4
06[a]	808643	3/8”-16X1-3/4” BOLT	4
07[a]	808180	NUT	4
08[a]	808165	MOUNT (LF/RR)	1
09	809198	NUT, 1”-8 LOCK CLASS C	8
10	51200254	3/4”-10X10” GR8 BOLT	8
11	51200261	FRAME LEVEL MNT *(front axle)*	1
12	808876	M22-1.5 WHEEL NUT	AR
13	808583	3/4”-10 GR8 LOCK NUT	8
14	51200255	PLATE, MOUNT	2
15	809196	BOLT, 1”-8 X 5-1/2” GR8	8
16	808553	THRUST BUSHING	2
17	808554	SUPPORT	2
18	809046	GREASE FITTING	2
19	808543	PLUG	2
20	808552	REDUCTION BUSHING	4
21	51200256	STABILIZER MOUNT *(rear axle)*	1
22	809234	WHEEL RIM 24X9.00	4
23[b]		AXLE ASSEMBLY, 223	
	51200257	FRONT *(with internal park brake)*	1
	51200258	REAR	1
24[c]	51200259	FENDER ASSY. (LF-RR) *(shown)*	AR
	51200260	FENDER ASSY. (RF-LR)	AR
		-- ITEMS NOT SHOWN --	
--	809528	VALVE STEM	AR

a *Standard on front axle—left side. If equipping the machine with additional fender assemblies (51200259 or 51200260), it will be necessary to also order fender axle mount P/N 102570 (LR/RF) as needed.*

b *Does not include other items shown in illustration.*

c *Optional fender assembly includes one items 2-4; fender mount -- item #4 is based on the location of the fender. The machine is factory equipped with the left front (LF) fender.*

silverhorn.co.uk

Front Axle - Brake and Steering Circuit

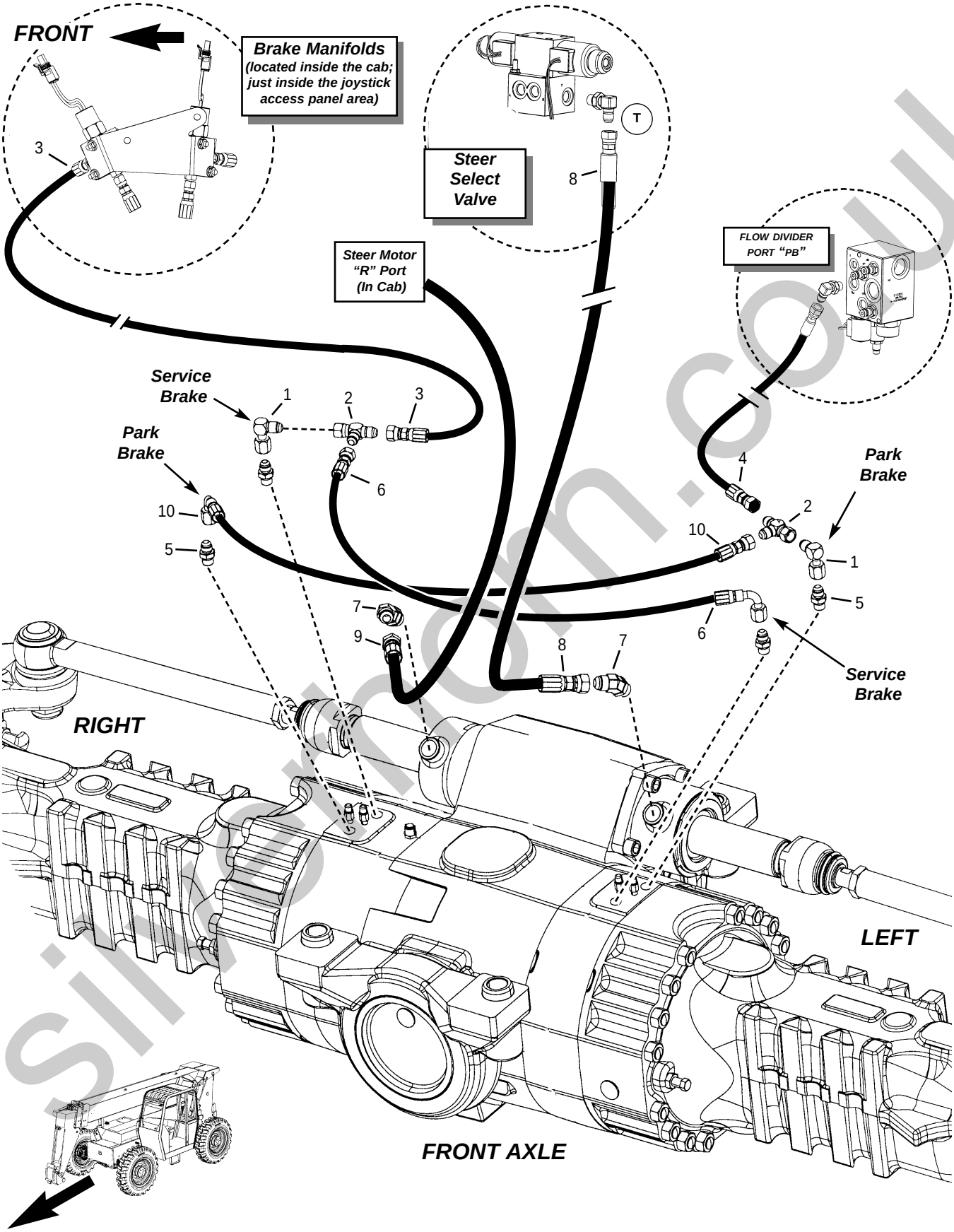

simeman.co.uk

Front Axle - Brake and Steering Circuit

Ref. No.	Part No.	Description	Qty. Req.
01	814506	ADAP., -6JICFS -6JICM 90º	2
02	814461	ADAP., -6 SWIVEL RUN TEE	2
03[a]	808281	HOSE, -4 A4/A6 66”	1
04	808278	HOSE, -6 A6/A6 57”	1
05	808804	ADAP., M14X1.5 -6-JICM	4
06	808882	HOSE, -4 A6/DS6 17”	1
07	813551	ADAP., -8ORM -8JICM 45º	2
08	51200262	HOSE, -6 A6/A8 56”	1
09	51200263	HOSE, -6 A8/DS8 98”	1
10	808882	HOSE, -4 A6/DS6 17”	1

a Hose attaches to the front brake manifold, located in the cab, just inside of the joystick access panel.

silverhorn.co.uk

Rear Axle - Brake and Steering Circuit

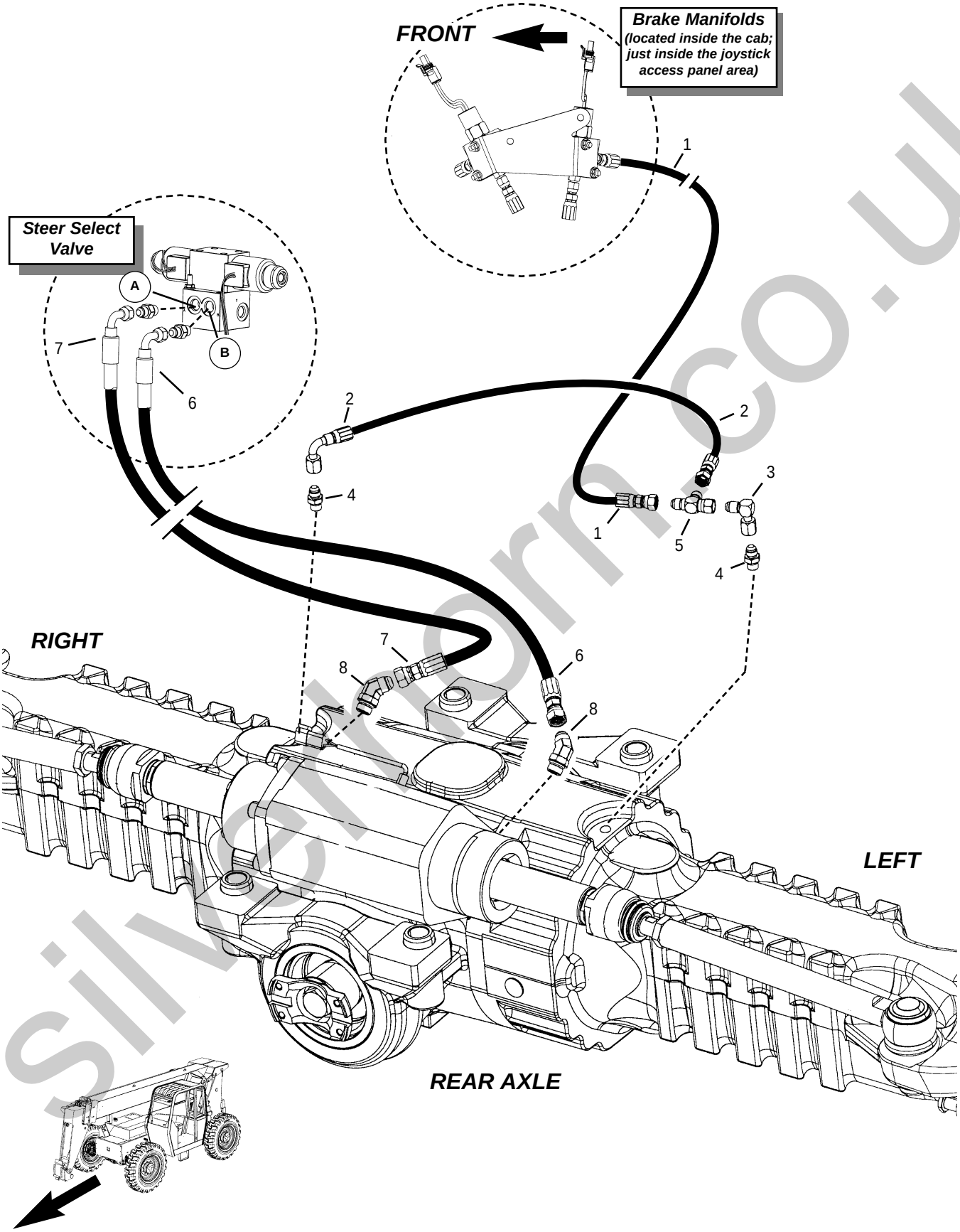

silverthorn.co.uk

Rear Axle - Brake and Steering Circuit

Ref. No.	Part No.	Description	Qty. Req.
01[a]	808279	HOSE, -4 A4/A6 90”	1
02	814501	HOSE, -4 A6/DS6 20”	1
03	814506	ADAP., -6JICFS -6JICM 90º	1
04	808804	ADAP., M14X1.5 -6-JICM	2
05	814461	ADAP., -6 SWIVEL RUN TEE	1
06	808885	HOSE, -6 A6/A8 100”	1
07	808885	HOSE, -6 A6/A8 100”	1
08	813551	ADAP., -8ORM -8JICM 45º	2

a *Hose attaches to the rear brake manifold, located in the cab, just inside of the joystick access panel.*

silverhorn.co.uk

Front and Rear Axle - Steer Cylinder, Central Housing and Trunion

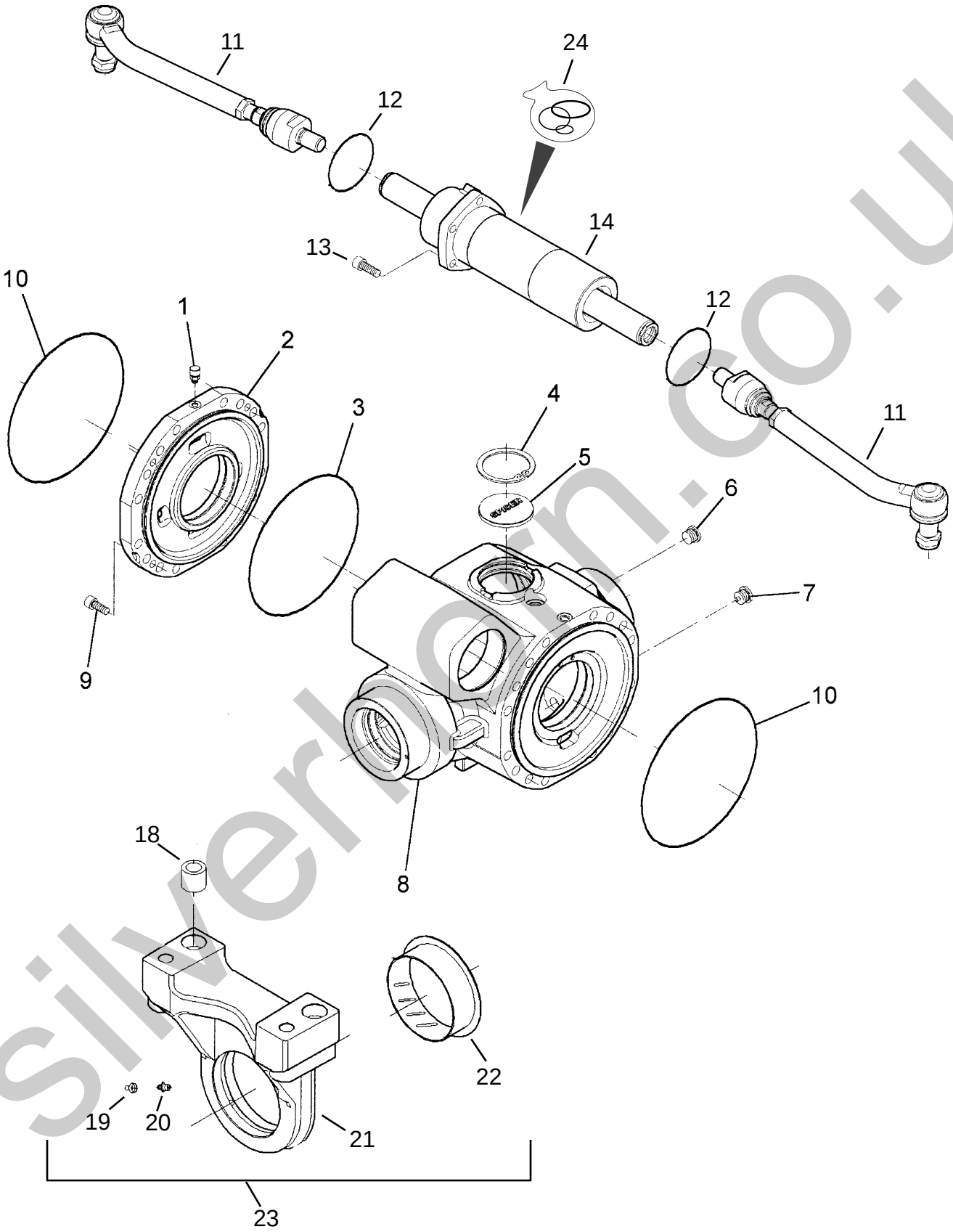

silverhorn.co.uk

Front and Rear Axle - Steer Cylinder, Central Housing and Trunion

Ref. No.	Part No.	Description	Qty. Req.
		NOTE: *Quantities shown are for one axle.*	
01		VENT	1
	51200264	(*Front Axle)*	
	50220030	(*Rear Axle)—Note A*	
	808516	(*Rear Axle)—Note B*	
02	51200265	INTERMEDIATE COVER	1
03	51200266	O-RING	1
04	809050	SNAP RING	1
05		PLUG	1
	51200267	(*Front Axle)*	
	51200268	(*Rear Axle)*	
06	51200269	PLUG	1
07	51200270	MAGNETIC PLUG	1
08		HOUSING	1
	51200271	(*Front Axle)*	
	51200272	(*Rear Axle)*	
09	51200273	BOLT	4
10	51200274	O-RING	2
11	51200275	TIE ROD	2
12	51200276	O-RING	2
13	51200277	BOLT	5
14	51200278	STEER CYLINDER	1
18	51200279	BUSHING	4
19	808543	PLUG	2
20	809046	GREASE FITTING	2
21	51200280	SUPPORT, AXLE	2
22	51200281	THRUST BUSHING	2
23	51200282	SUPPORT ASSEMBLY	2
		(includes items 18-22)	
24	51200283	SEAL KIT, STEER CYLINDER	1

NOTE: *Quantities shown are for one axle.*

a *Rear Axle SN N-ITA-749220 and up*
b *Rear Axle SN N-ITA-749219 and before*

silverhorn.co.uk

Front Axle - Differential

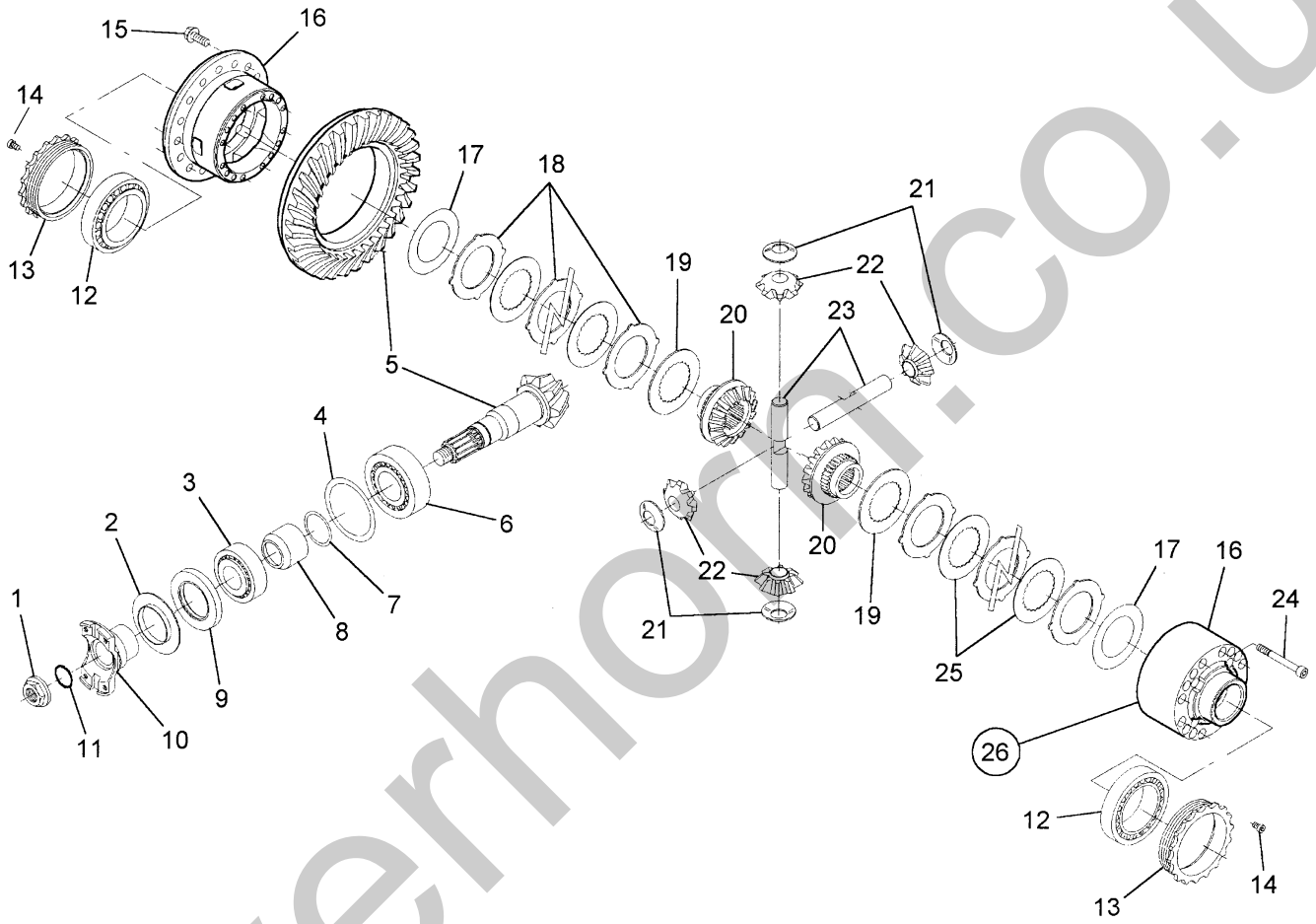

silverhorn.co.uk

Ref. No.	Part No.	Description	Qty. Req.
01	51200284	NUT	1
02	51200285	COVER PLATE	1
03	51200286	TAPER ROLLER BEARING	1
04		SHIM	AR
	51200287	SHIM	
	51200288	SHIM	
	51200289	SHIM	
	51200290	SHIM	
05	51200291	BEVEL GEAR SET	1
06	51200292	TAPER ROLLER BEARING	1
07[a]		SPACER	1
	50220031	SPACER, 60 x 50 x 11.8 MM	
	50220032	SPACER, 60 x 50 x 11.9 MM	
	50220033	SPACER, 60 x 50 x 12.0 MM	
	50220034	SPACER, 60 x 50 x 12.1 MM	
	50220035	SPACER, 60 x 50 x 12.2 MM	
	50220036	SPACER, 60 x 50 x 12.3 MM	
	50220037	SPACER, 60 x 50 x 12.4 MM	
	50220038	SPACER, 60 x 50 x 12.5 MM	
	50220039	SPACER, 60 x 50 x 12.6 MM	
	50220040	SPACER, 60 x 50 x 12.7 MM	
	50220041	SPACER, 60 x 50 x 5.0 MM	
	50220042	SPACER, 60 x 50 x 5.025 MM	
	50220043	SPACER, 60 x 50 x 5.05 MM	
	50220044	SPACER, 60 x 50 x 5.075 MM	
07[b]		SHIM	1
	51200293	SHIM	
	51200294	SHIM	
	51200295	SHIM	
	51200296	SHIM	
08[a]	50220045	SPACER	1
08[b]	51200297	SPACER	1
09	51200298	SEAL	1
10	51200299	FLANGE	1
11	51200300	O-RING	1
12	51200301	TAPER ROLLER BEARING	2
13	51200302	RING NUT	2
14	808524	BOLT	2
15	808525	BOLT	16
16[a]	50220049	DIFFERENTIAL CARRIER	1
16[b]	51200303	DIFFERENTIAL CARRIER	1
17[a]	50220046	CLUTCH DISC	2
17[b]		SHIM	2
	51200304	SHIM	
	51200305	SHIM	
	51200306	SHIM	
18	51200307	DISC	10
19	51200308	DISC	2
20	51200309	DIFFERENTIAL SIDE GEAR	2
21[a]	50220054	FRICTION WASHER	4
21[b]	51200310	FRICTION WASHER	4
22	51200311	DIFFERENTIAL PINION	4
23[a]	50220055	DIFFERENTIAL SHAFT	2
23[b]	51200312	PIN	2
24[b]	51200313	BOLT	16
25	51200314	DISC	8
26[a]	50220051	DIFFERENTIAL *(includes items 16-25)*	1
26[b]	51200315	DIFFERENTIAL *(includes items 16-25)*	1

a *Axle SN N-ITA-749223 and up*
b *Axle SN N-ITA-749222 and before*

silverhorn.co.uk

Front Axle - Hub Reduction

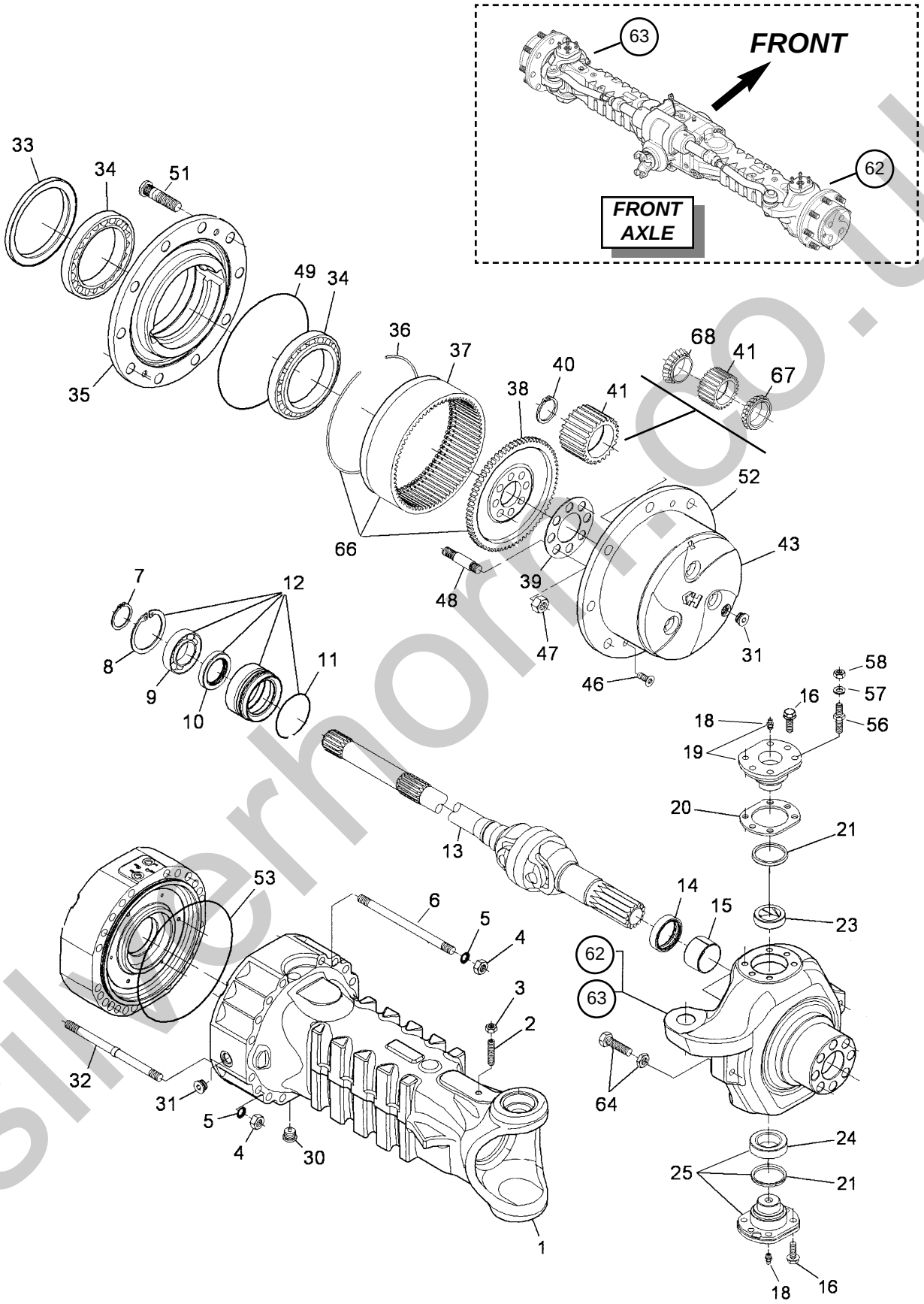

silverhorn.co.uk

Front Axle - Hub Reduction

Ref. No.	Part No.	Description	Qty. Req.
01	51200318	AXLE CASE	2
02	808175	BOLT	2
03	808538	NUT	2
04	808205	NUT	32
05	808539	WASHER	32
06	51200319	STUD	8
07	809049	SNAP RING	2
08	809050	SNAP RING	2
09	809048	BALL BEARING	2
10	808541	SEAL	2
11	808542	O-RING	2
12	808540	REDUCTION BUSHING	2
13	51200320	DOUBLE UNIVERSAL JOINT	2
14	808188	SEAL	2
15	808181	THRUST BUSHING	1
16	808525	BOLT	8
18	809046	GREASE FITTING	4
19	808183	PIVOT PIN	2
20[a]	50220046	CLUTCH DISC	2
20[b]		SHIM	2
	808201	SHIM	
	808202	SHIM	
	808203	SHIM	
21	51200321	DUST EXCLUDER	2
23	808182	BUSHING	2
24	808186	BEARING	2
25	808184	PIVOT PIN	2
30	51200270	MAGNETIC PLUG	2
31	51200269	PLUG	3
32	51200322	STUD	24
33	51200338	SEAL	2
34	51200323	TAPER ROLLER BEARING	4
35	51200324	WHEEL HUB	2
36	808199	SNAP RING	2
37	51200325	RING GEAR	2
38	51200326	RING GEAR SUPPORT	2
39	51200327	LOCKING PLATE	2
40	51200328	SNAP RING	8
41	51200329	PLANET GEAR	8
43	51200330	PLANET GEAR CARRIER	2
46	51200339	COUNTER-SUNK BOLT	4
47	51200343	NUT	16
48	51200344	STUD	16
49	808194	O-RING	2
51	808192	WHEEL STUD	20
52	51200331	PLANET GEAR CARRIER *(includes items 36-38 & 40-43)*	2
53	51200274	O-RING	2
56[a]	50220056	STUD	8
56[b]	808313	STUD	8
57	808177	WASHER	8
58	808180	NUT	8
59	51200332	BOLT	4
62[c]	51200333	STEERING CASE *(includes item 15)*	1
63[c]	51200334	STEERING CASE *(includes item 15)*	1
64	51200340	STEERING BOLT & NUT	4
66	51200335	RING GEAR SUPPORT *(includes items 36-38)*	2
67	51200336	TAPER ROLLER BEARING	8
68	51200337	ROLLER BEARING	8

a *Axle SN N-ITA-749223 and up*
b *Axle SN N-ITA-749222 and before*

c *When ordering, refer to inset illustration "Front Axle" on facing page when ordering to determine correct steering case (e.g., left-side or right-side).*

silvermorn.co.uk

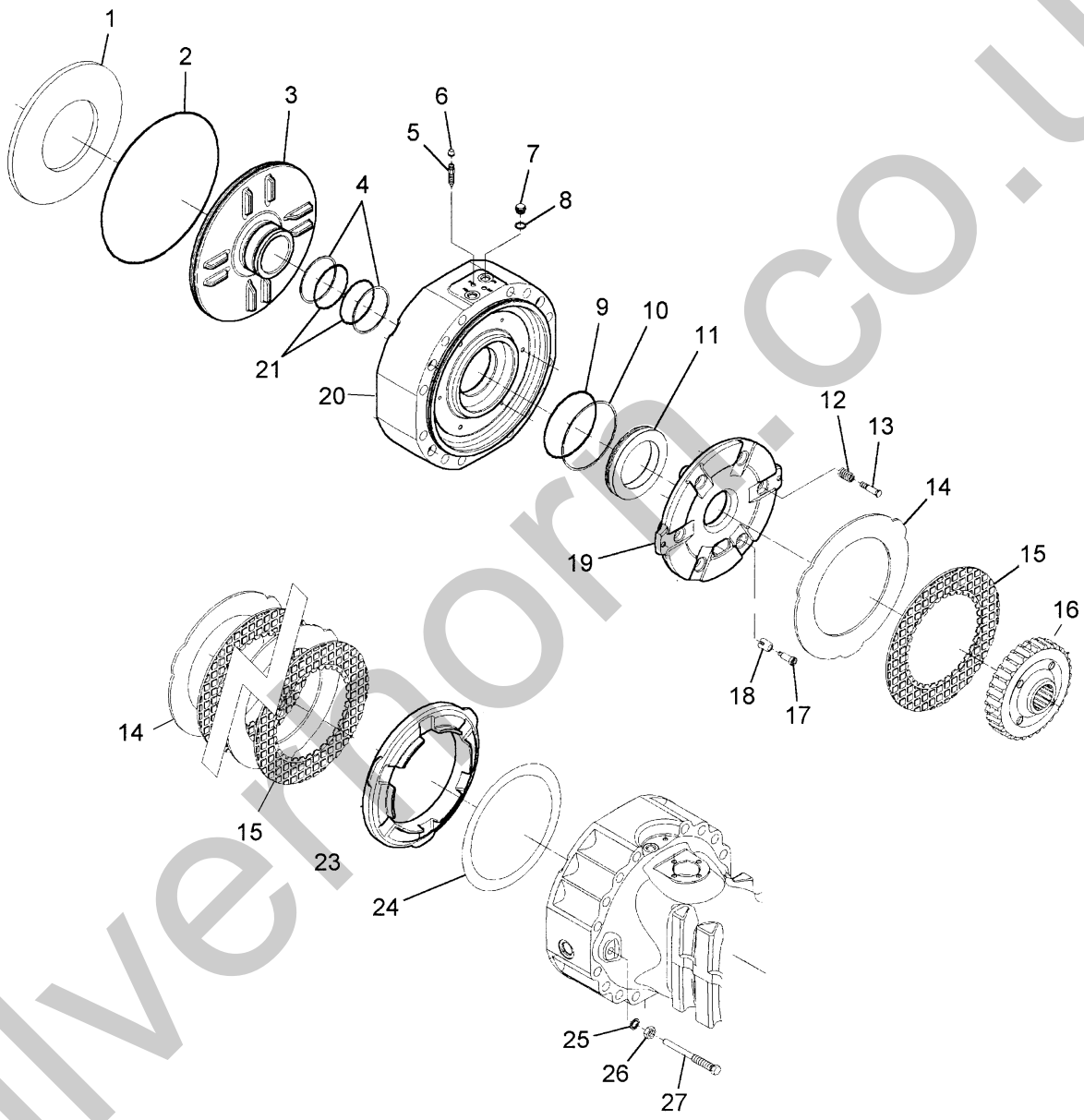

silvermoor.co.uk

Front Axle - Brakes

Ref. No.	Part No.	Description	Qty. Req.
01	51200345	SPRING	2
02	51200274	O-RING	2
03	51200346	PISTON	2
04	808212	BACK-UP RING	2
05	51200348	BLEED SCREW	2
06	808543	PLUG	2
07	50220068	PLUG ASSEMBLY *(includes #8)*	2
08	NSS	SEAL WASHER *(included w/ #7)*	
09	51200350	O-RING	2
10	51200351	BACK-UP RING	2
11	51200352	PISTON	2
12	808217	SPRING	6
13	808218	ADJUSTING BOLT	6
14	51200353	INTERMEDIATE BRAKE DISC	6
15	51200354	BRAKE DISC	6
16	51200355	REDUCTION BUSHING	2
17	808221	ADJUSTING BOLT	6
18	809453	SPRING	6
19	51200356	INTERMEDIATE BRAKE DISC	2
20	51200357	INTERMEDIATE COVER	2
21	808211	O-RING	4
23	51200358	SPACER	2
24		SHIM	2
	51200359	SHIM	
	51200360	SHIM	
	51200361	SHIM	
25	808224	LOCK WASHER	4
26	808223	NUT	4
27	809365	BOLT	4

silverhorn.co.uk

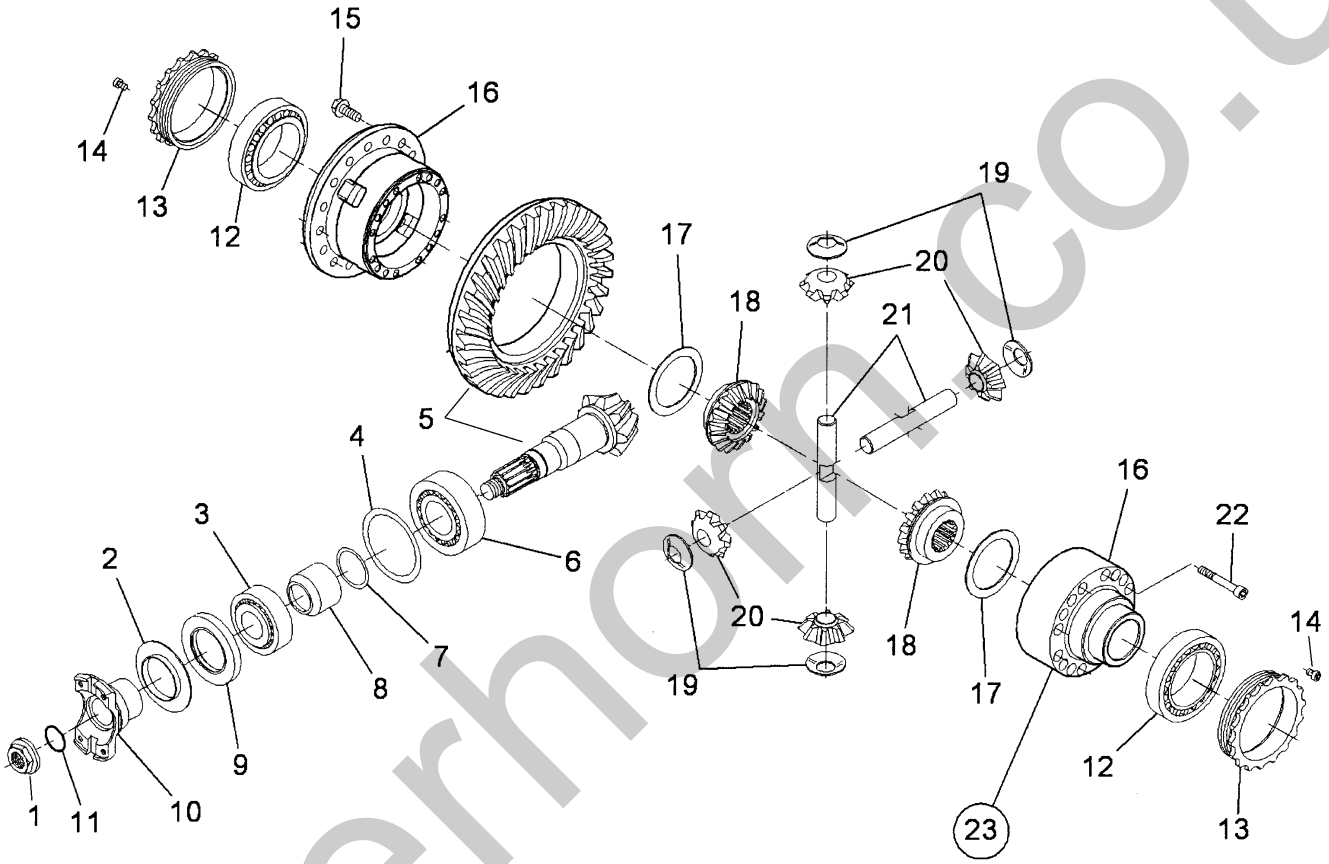

silverhorn.co.uk

Ref. No.	Part No.	Description	Qty. Req.
01	51200284	NUT	1
02	51200285	COVER PLATE	1
03	51200286	TAPER ROLLER BEARING	1
04		SHIM	AR
	51200287	SHIM	
	51200288	SHIM	
	51200289	SHIM	
	51200290	SHIM	
05	51200316	BEVEL GEAR SET	1
06	51200292	TAPER ROLLER BEARING	1
07[a]		SPACER	1
	50220031	SPACER, 60 x 50 x 11.8 MM	
	50220032	SPACER, 60 x 50 x 11.9 MM	
	50220033	SPACER, 60 x 50 x 12.0 MM	
	50220034	SPACER, 60 x 50 x 12.1 MM	
	50220035	SPACER, 60 x 50 x 12.2 MM	
	50220036	SPACER, 60 x 50 x 12.3 MM	
	50220037	SPACER, 60 x 50 x 12.4 MM	
	50220038	SPACER, 60 x 50 x 12.5 MM	
	50220039	SPACER, 60 x 50 x 12.6 MM	
	50220040	SPACER, 60 x 50 x 12.7 MM	
	50220041	SPACER, 60 x 50 x 5.0 MM	
	50220042	SPACER, 60 x 50 x 5.025 MM	
	50220043	SPACER, 60 x 50 x 5.05 MM	
	50220044	SPACER, 60 x 50 x 5.075 MM	
07[b]		SHIM	1
	51200293	SHIM	
	51200294	SHIM	
	51200295	SHIM	
	51200316	SHIM	
08[a]	50220045	SPACER	1
08[b]	51200297	SPACER	1
09	51200298	SEAL	1
10	51200299	FLANGE	1
11	51200300	O-RING	1
12	51200301	TAPER ROLLER BEARING	2
13	51200302	RING NUT	2
14	808524	BOLT	2
15	808525	BOLT	16
16[a]	50220048	DIFFERENTIAL CARRIER	1
16[b]	51200362	DIFFERENTIAL CARRIER	1
17[a]	50220052	FRICTION WASHER	2
17[b]	51200363	FRICTION WASHER	2
18[a]	50220053	DIFFERENTIAL SIDE GEAR	2
18[b]	51200364	DIFFERENTIAL SIDE GEAR	2
19[a]	50220054	FRICTION WASHER	4
19[b]	51200310	FRICTION WASHER	4
20	51200311	DIFFERENTIAL PINON	4
21[a]	50220055	PIN	2
21[b]	51200312	PIN	2
22[a]	50220029	BOLT	15
22[b]	51200365	BOLT	15
23[a]	50220050	DIFFERENTIAL *(includes items 16-22)*	1
23[b]	51200366	DIFFERENTIAL *(includes items 16-22)*	1

a *Axle SN N-ITA-749220 and up*
b *Axle SN N-ITA-749219 and before*

silverhorn.co.uk

Rear Axle - Hub Reduction

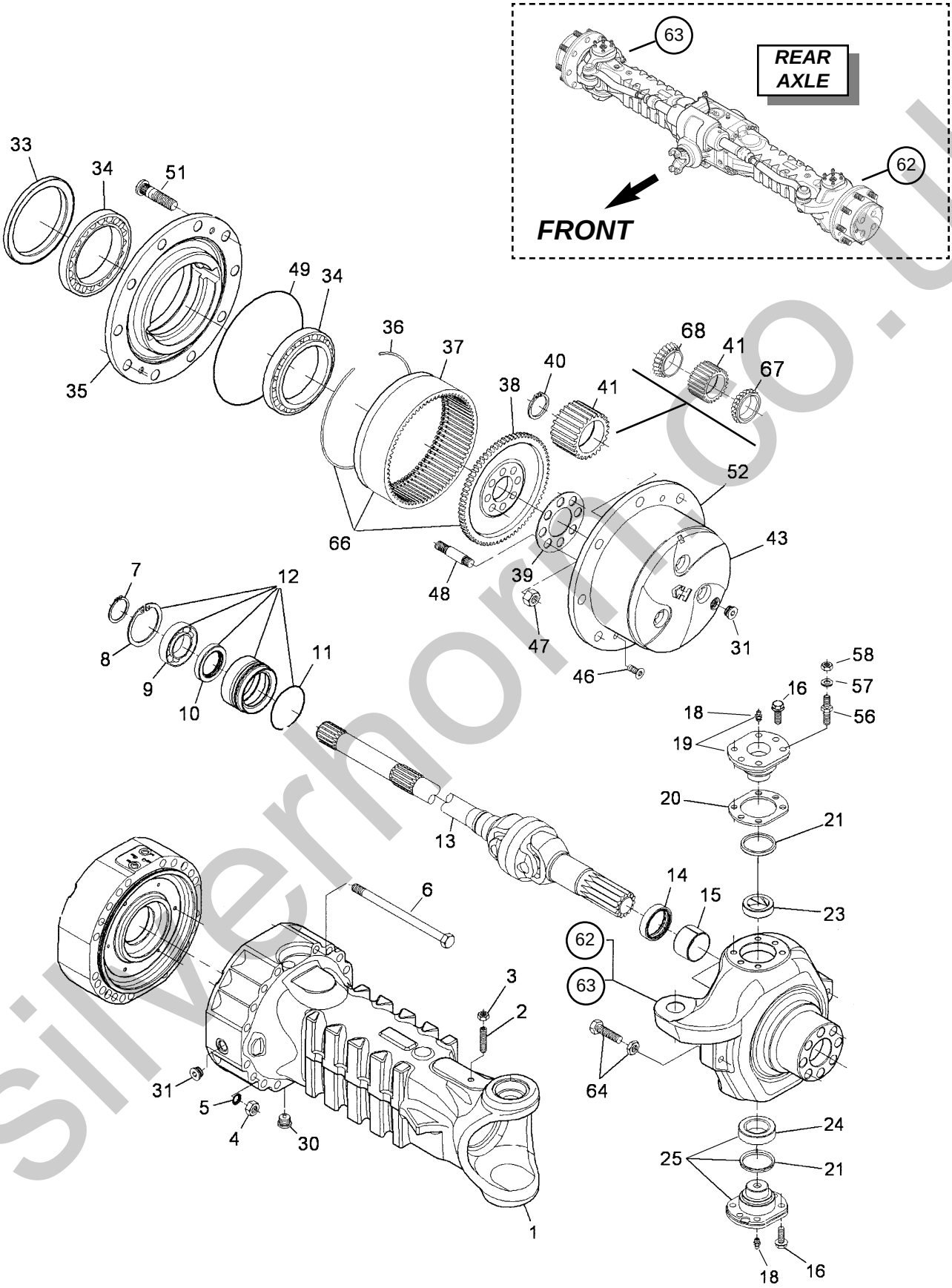

silverhorn.co.uk

Rear Axle - Hub Reduction

Ref. No.	Part No.	Description	Qty. Req.
01	51200367	AXLE CASE	2
02	808175	BOLT	2
03	808538	NUT	2
06	51200368	BOLT	32
07	809049	SNAP RING	2
08	809050	SNAP RING	2
09	809048	BALL BEARING	2
10	808541	SEAL	2
11	808542	O-RING	2
12	808540	REDUCTION BUSHING	2
13	51200341	DOUBLE UNIVERSAL JOINT	2
14	808188	SEAL	2
15	808181	THRUST BUSHING	1
16	808525	BOLT	8
18	809046	GREASE FITTING	4
19	808183	PIVOT PIN	2
20		SHIM	2
	808201	SHIM	
	808202	SHIM	
	808203	SHIM	
21	51200321	DUST EXCLUDER	2
23	808182	BUSHING	2
24	808186	BEARING	2
25	808184	PIVOT PIN	2
30	51200270	MAGNETIC PLUG	2
31	51200269	PLUG	3
33	51200338	SEAL	2
34	51200323	TAPER ROLLER BEARING	4
35	51200324	WHEEL HUB	2
36	808199	SNAP RING	2
37	51200325	RING GEAR	2
38	51200326	RING GEAR SUPPORT	2
39	51200327	LOCKING PLATE	2
40	51200328	SNAP RING	8
41	51200329	PLANET GEAR	8
43	51200342	PLANET GEAR CARRIER	2
46	51200339	COUNTER-SUNK BOLT	4
47	51200369	NUT	16
48	51200344	STUD	16
49	808194	O-RING	2
51	808192	WHEEL STUD	20
52	51200370	PLANET GEAR CARRIER *(includes items 36-38 & 40-43)*	2
56[a]	50220056	STUD	8
56[b]	808313	STUD	8
57	808177	WASHER	8
58	808180	NUT	8
59	51200332	BOLT	4
62[c]	51200333	STEERING CASE *(includes item 15)*	1
63[c]	51200334	STEERING CASE *(includes item 15)*	1
64	51200340	STEERING BOLT & NUT	4
66	51200335	RING GEAR SUPPORT *(includes items 36-38)*	2
67	51200336	TAPER ROLLER BEARING	8
68	51200337	ROLLER BEARING	8

a *Axle SN N-ITA-749220 and up*
b *Axle SN N-ITA-749219 and before*

c *When ordering, refer to inset illustration "Front Axle" on facing page when ordering to determine correct steering case (e.g., left-side or right-side).*

silverhorn.co.uk

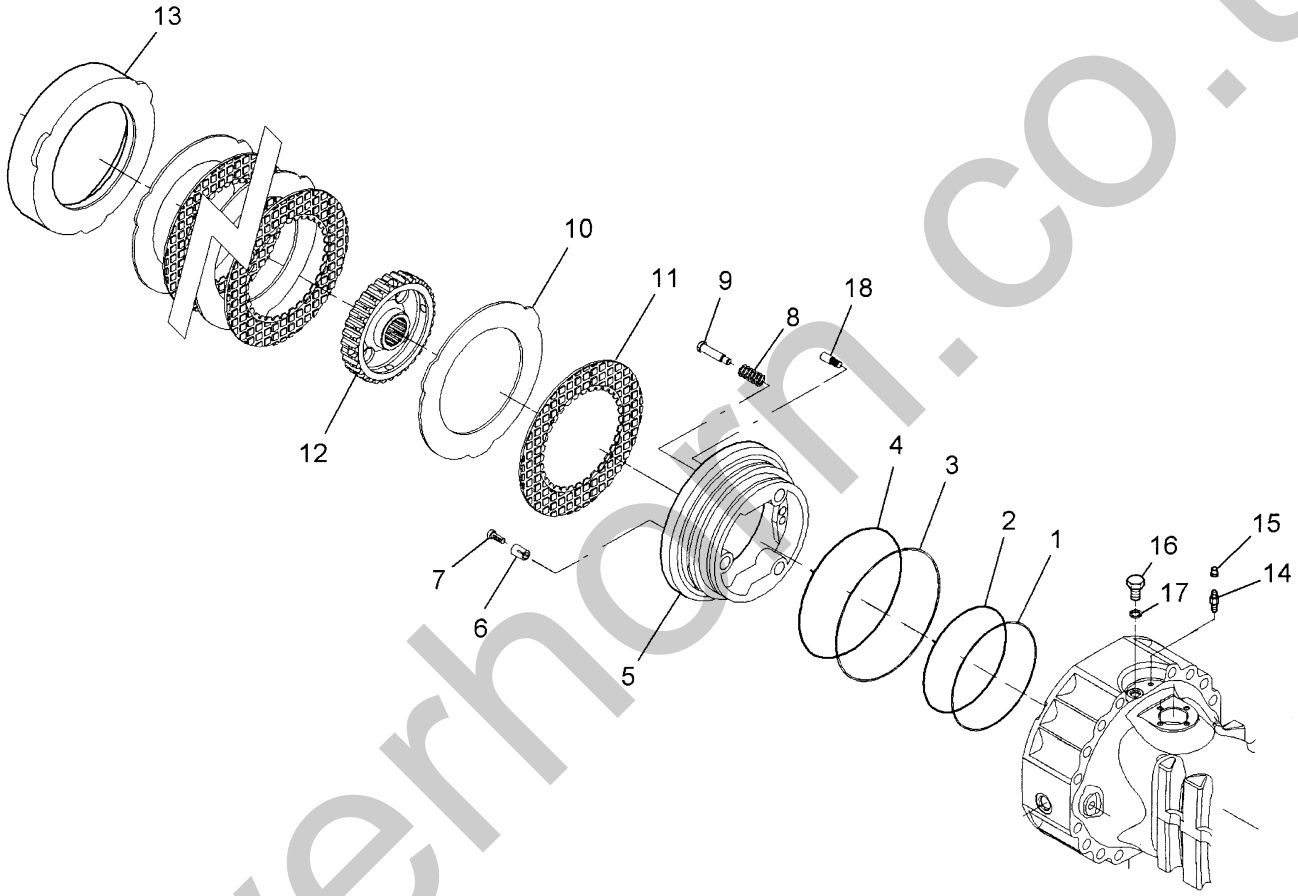

silverhorn.co.uk

Rear Axle - Brakes

Ref. No.	Part No.	Description	Qty. Req.
01	51200371	BACK-UP RING	2
02	51200372	O-RING	2
03	51200373	BACK-UP RING	2
04	51200374	O-RING	2
05	51200375	PISTON	2
06	808222	SPRING	6
07	809239	ADJUSTING BOLT	6
08	808217	SPRING	6
09	808218	ADJUSTING BOLT	6
10	51200353	INTERMEDIATE BRAKE DISC	6
11	51200354	BRAKE DISC	6
12	51200355	REDUCTION BUSHING	2
13	51200376	SPACER	2
14	51200348	BLEED SCREW	2
15	808543	PLUG	2
16	50220068	PLUG ASSEMBLY *(includes #17)*	2
17	NSS	SEAL WASHER *(included w/ #16)*	
18	51200377	PILOT BOLT	2

silverhorn.co.uk

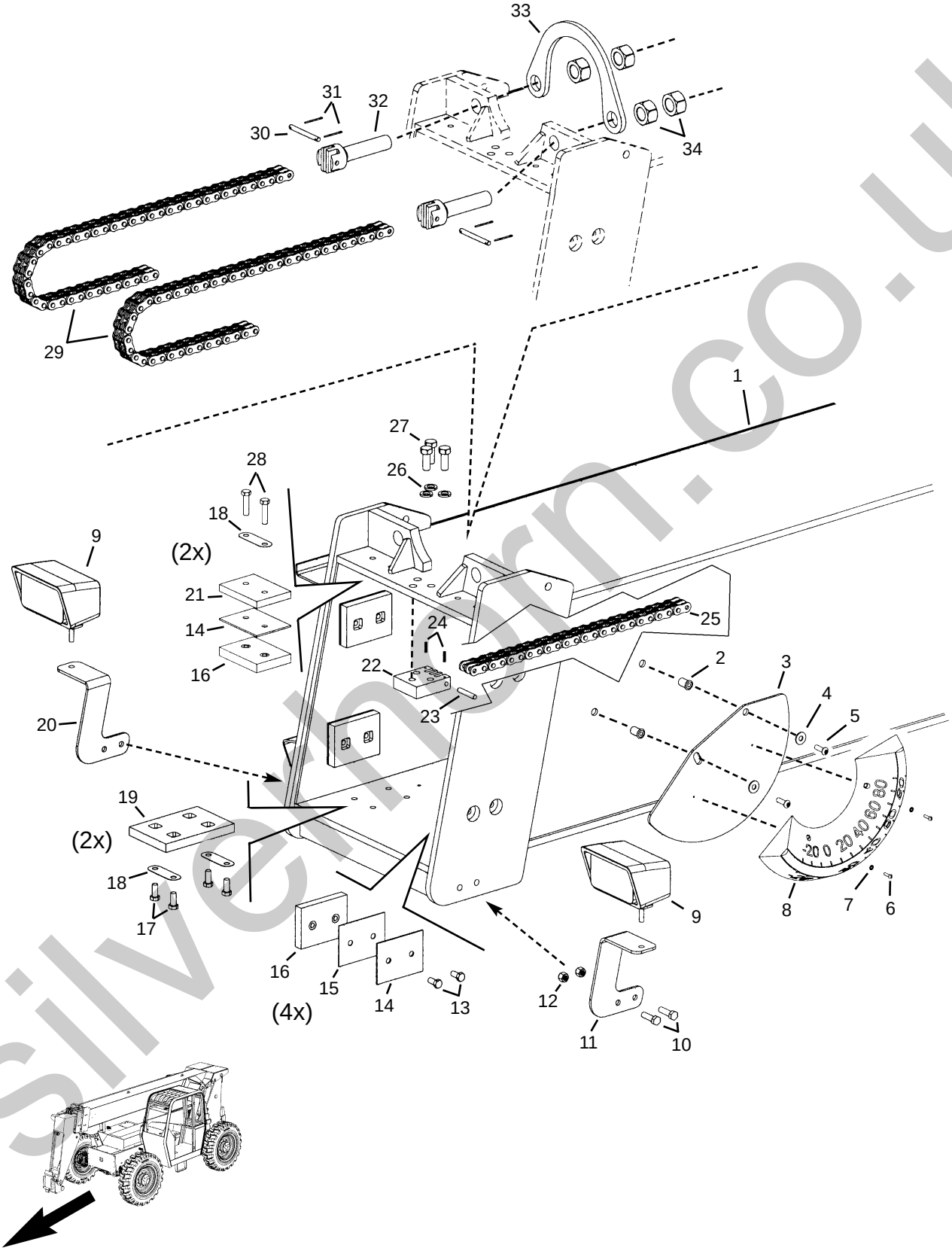

silvermorn.co.uk

Ref. No.	Part No.	Description	Qty. Req.
01	51200378	OUTER BOOM WELDMENT	1
02	808902	5/16”-18 NUT INSERT	2
03	808800	BOOM ANGLE IND. PLATE	1
04	813729	5/16” FLAT WASHER	2
05	808669	5/16”-18X1” BUTTON HD BOLT	2
06	51200379	#8X3/8” RND HD MACH SCREW	2
07	808587	#10 LOCK WASHER	2
08	808799	INCLINOMETER - ANGLE IND.	1
09	808890	WORK LIGHT	2
10	813713	3/8”-16X1-1/4” BOLT	4
11	808916	BOOM LIGHT BRACKET *(left)*	1
12	808663	3/8”-16 NYLON INSERT NUT	4
13	813677	3/8”-16X3/4” BOLT	16
14	808702	1/8”X3”X4” SHIM	6
15	808701	1/16”X3”X4” SHIM	4
16	808693	SLIDE PAD, 3”X4”	6
17	814211	3/8”X7/8” BOLT	8
18	808696	FLAT-BOLT LOCK	6
19	814210	SLIDE PAD, 4”X6”	2
20	808915	BOOM LIGHT BRACKET *(right)*	1
21	808747	SPACER, 1/2”X3”X4”	2
22	814214	CLEVIS, FIXED	1
23	814216	PIN, FIXED CLEVIS CHAIN	1
24	814215	#10-24X3/4” SET SCREW	2
25[ab]	814220	CHAIN, LEAF *(retract)*	1
26	813805	1/2” LOCK WASHER	3
27	808619	1/2-20X1-1/4” GRD 8 BOLT	3
28	813697	3/8”X1-1/2” BOLT	4
29[ab]	814219	CHAIN, LEAF *(extend)*	2
30	814217	PIN, ADJUSTABLE CLEVIS	2
31	814217	3/32X1-1/4” COTTER PIN	2
32	814218	CLEVIS, ADJUSTABLE	2
33	814272	RETAINER, EXTEND CYL.	1
34	808584	NUT, ADJUSTABLE CLEVIS	AR

a *This parts manual shows the same chain(s) on multiple pages. Before ordering chains, refer to the illustration below to avoid ordering the incorrect chain(s) or the incorrect quantities.*

b *Refer to the section 2nd Intermediate Boom - Rear for more information.*

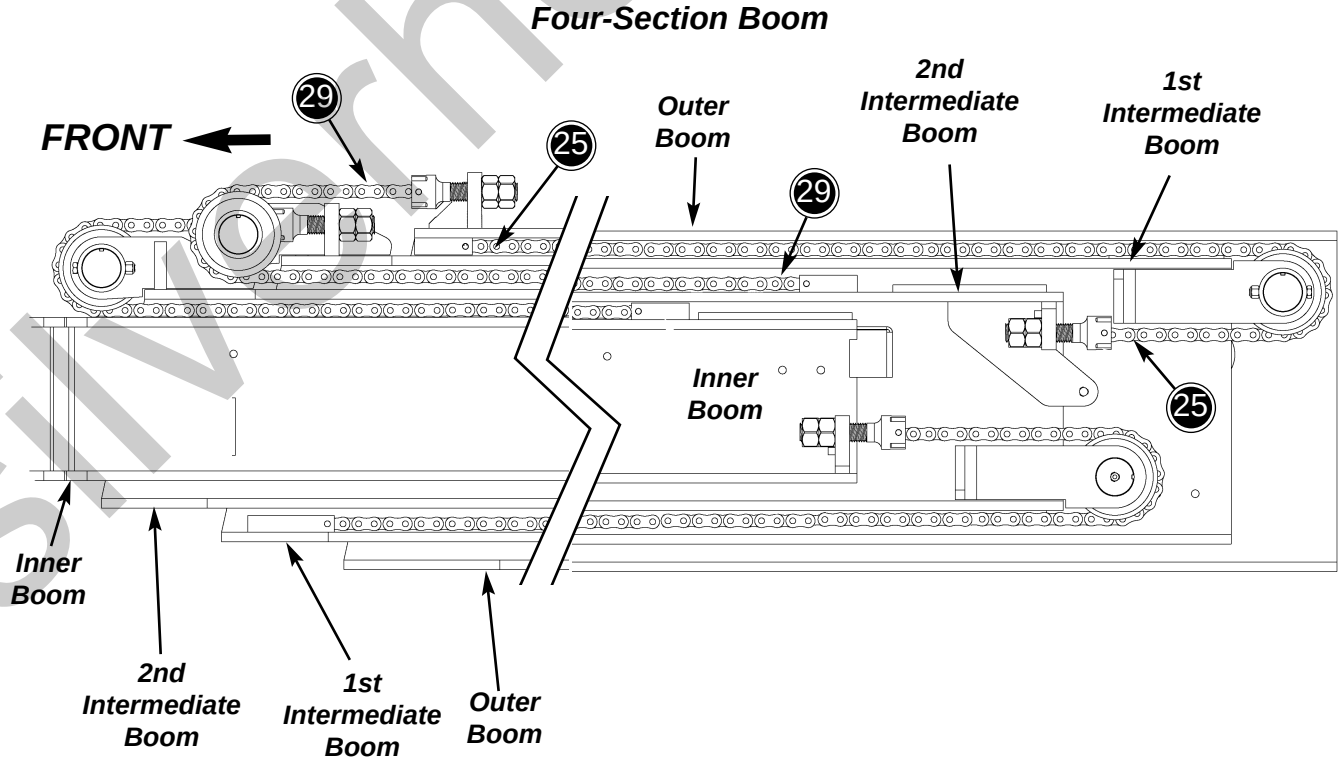

silverhorn.co.uk

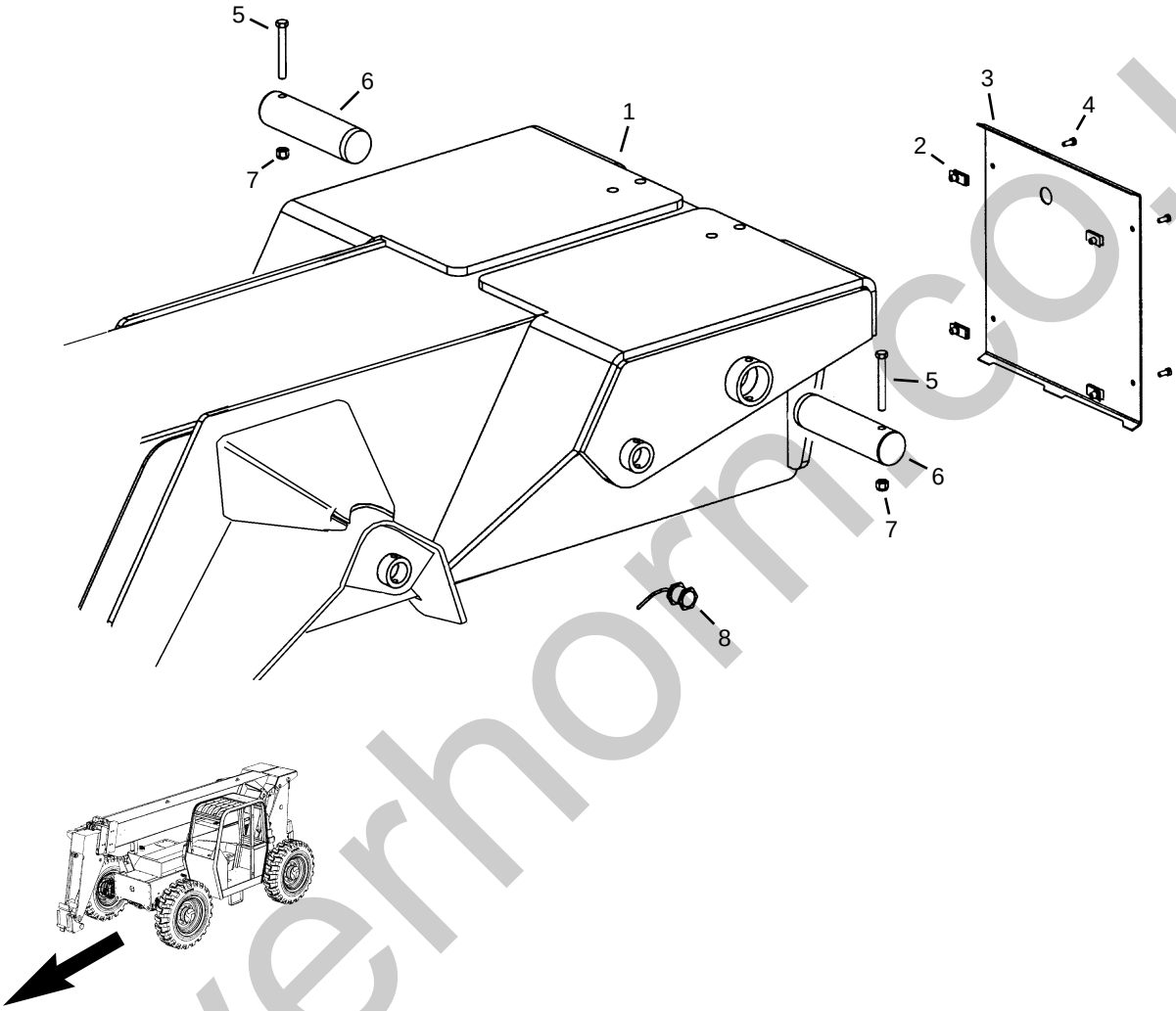

Ref. No.	Part No.	Description	Qty. Req.
01	51200378	OUTER BOOM	1
02	808671	5/16” RETAINER CLIP	4
03	51200380	COVER, REAR BOOM	1
04	808498	5/16”-18x3/4” BOLT	4
05	51200382	1/2”-13X4” BOLT	2
06	51200381	PIN, BOOM	2
07	808665	1/2”-13 NYLON INSERT NUT	2
08	808929	SWITCH, PROXIMITY	1

silverhorn.co.uk

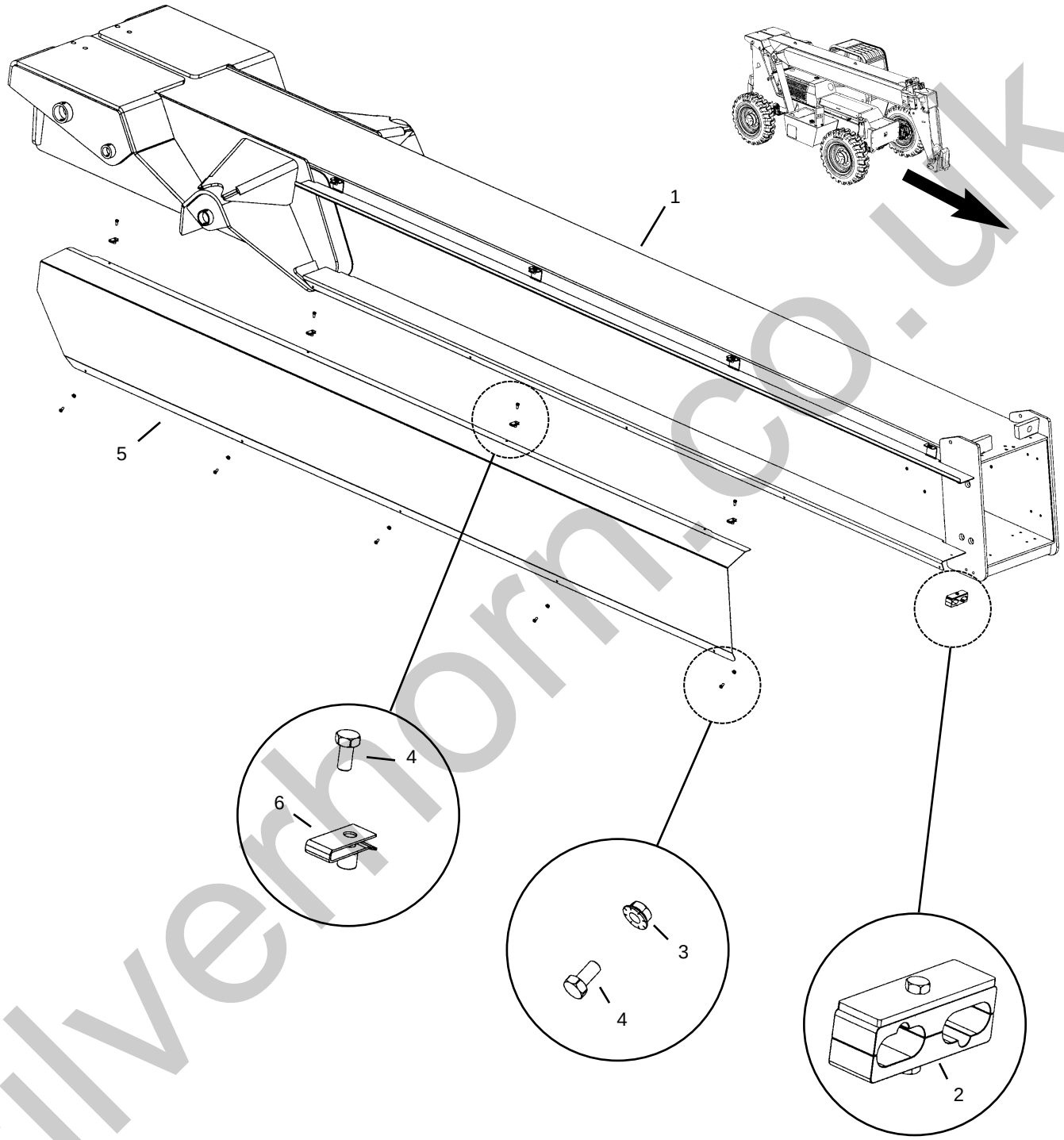

Ref. No.	Part No.	Description	Qty. Req.	Ref. No.	Part No.	Description	Qty. Req.
01	51200378	OUTER BOOM WELDMENT	1	04	814206	5/16”-18X5/8” BOLT	8
02	808949	CLAMP ASSEMBLY	1	05	51200383	COVER, BOOM SIDE	1
03	808555	5/16”-18 WHIZ LOCK NUT	4	06	808671	5/16” FASTENER, RETAINED	4

silverhorn.co.uk

1st Intermediate - Front

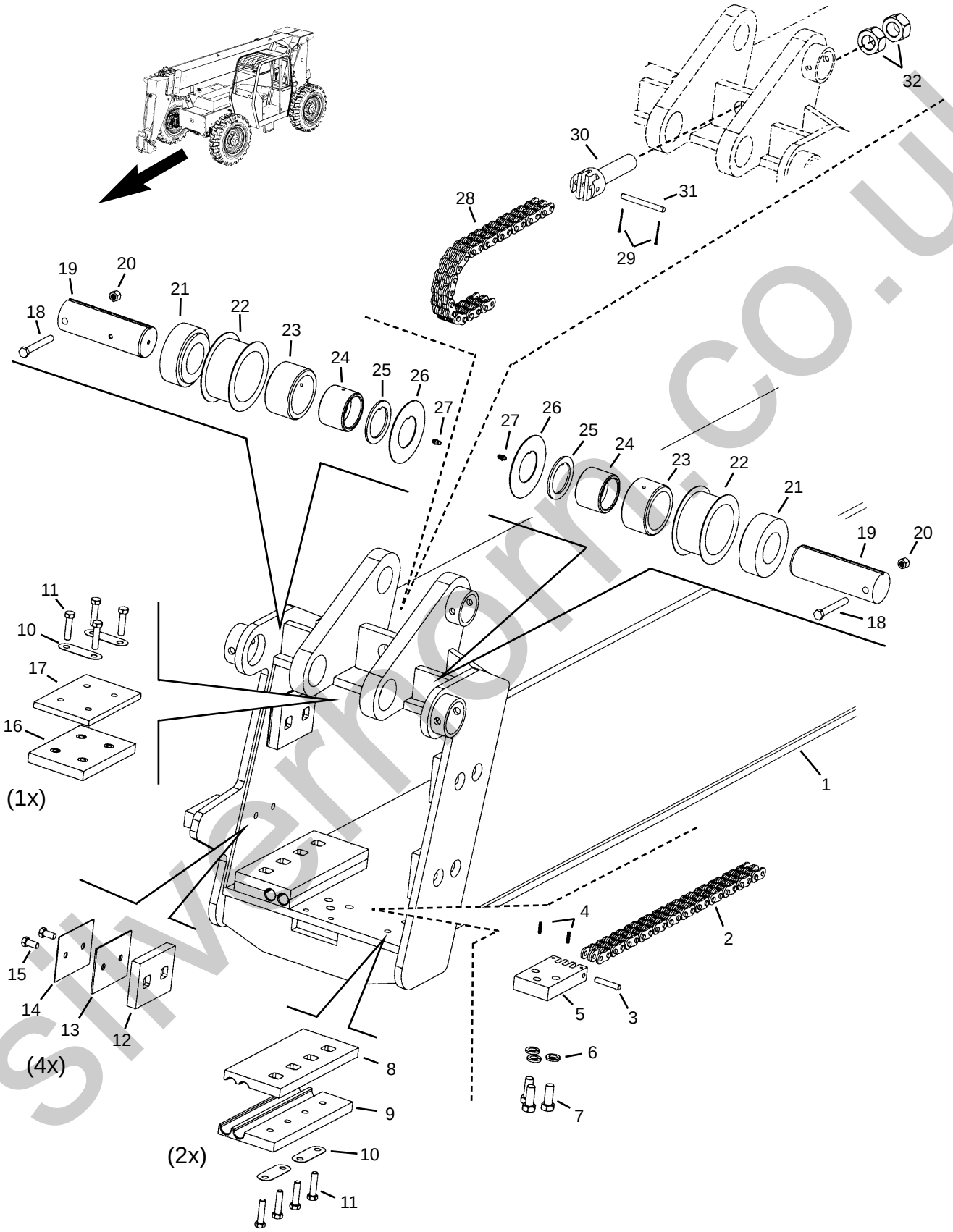

silverhome.co.uk

1st Intermediate - Front

Ref. No.	Part No.	Description	Qty. Req.
01	814273	1ST-INTERMEDIATE BOOM	1
02[ab]	814220	LEAF CHAIN *(retract)*	1
03	814216	FIXED CHAIN PIN	1
04	814215	#10-24X3/4” SET SCREW	2
05	814226	FIXED CLEVIS	1
06	813805	1/2” LOCK WASHER	3
07	808619	1/2”-20X1-1/4” BOLT GR8	3
08	51200384	SLIDE PAD W/CLAMP	2
09	51200385	SPACER PAD W/CLAMP	2
10	808696	BOLT FLAT LOCK	6
11	813697	3/8”-16X1”-1/2 BOLT	12
12	808693	SLIDE PAD 3”X4”	4
13	808702	SHIM 0.105”X3”X4”	4
14	808701	SHIM 0.06”X3”X4”	4
15	813677	3/8”X3/4” BOLT	8
16	808692	TOP SLIDE PAD 4X6	1
17	808746	SPACER 3/8”X4”X6”	1
18	813711	3/8”-16X3” BOLT	2
19	814227	SHEAVE PIN	2
20	808663	3/8” NYLON INSERT NUT	2
21	814228	SHEAVE SPACER	2
22	809882	CHAIN SHEAVE	2
23	808477	ROLLER BEARING	2
24	808478	INNER RING	2
25	814223	SPACER	2
26	814229	THRUST WASHER	2
27	51200386	GREASE ZERK, STR. 1/4”-28	2
28[ab]	814231	LEAF CHAIN *(extend)*	1
29	814217	3/32”X1-1/4” COTTER PIN	2
30	814218	ADJUSTABLE CLEVIS	1
31	814217	CHAIN PIN	1
32	808584	HEX NUT 1”-8	2

a *This parts manual shows the same chain(s) on multiple pages. Before ordering chains, refer to the illustration below to avoid ordering the incorrect chain(s) or incorrect quantities.*

b *Refer to the section Inner Boom - Rear for more information.*

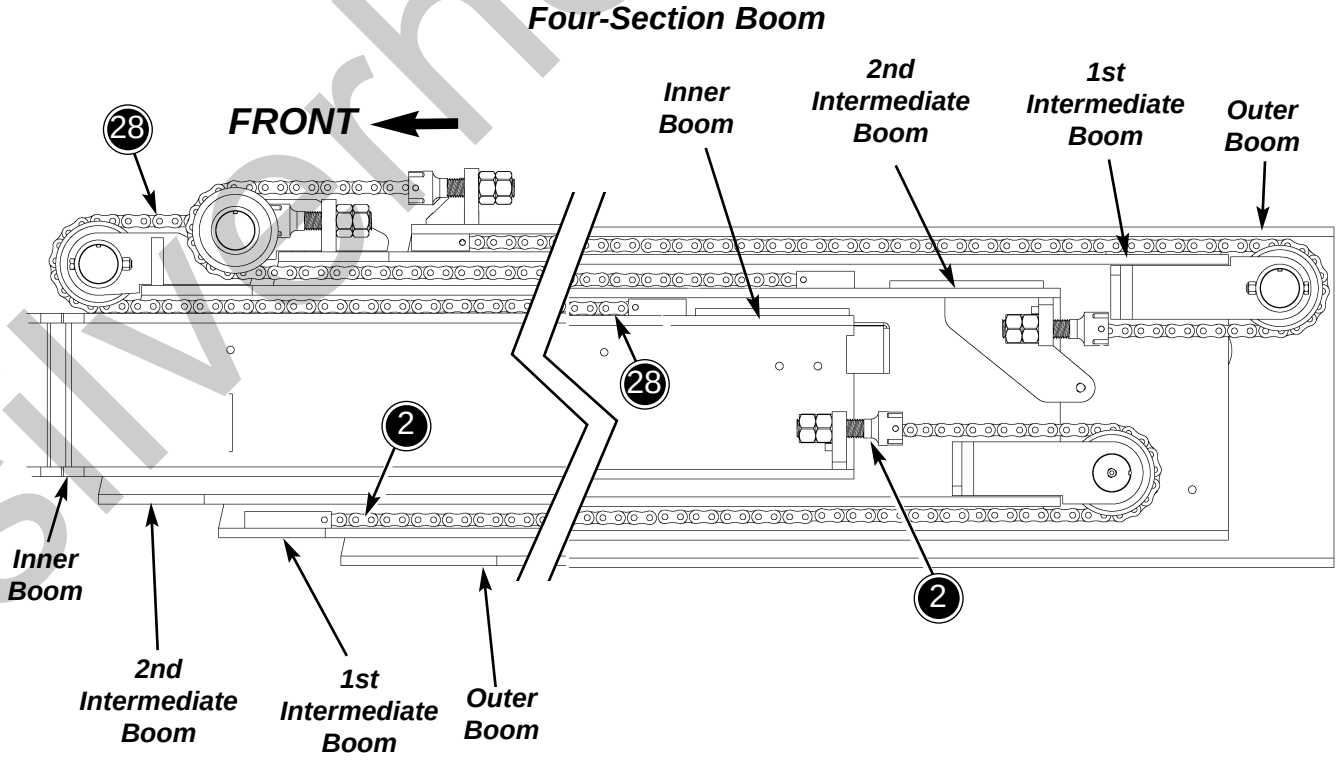

silverhorn.co.uk

1st Intermediate - Rear

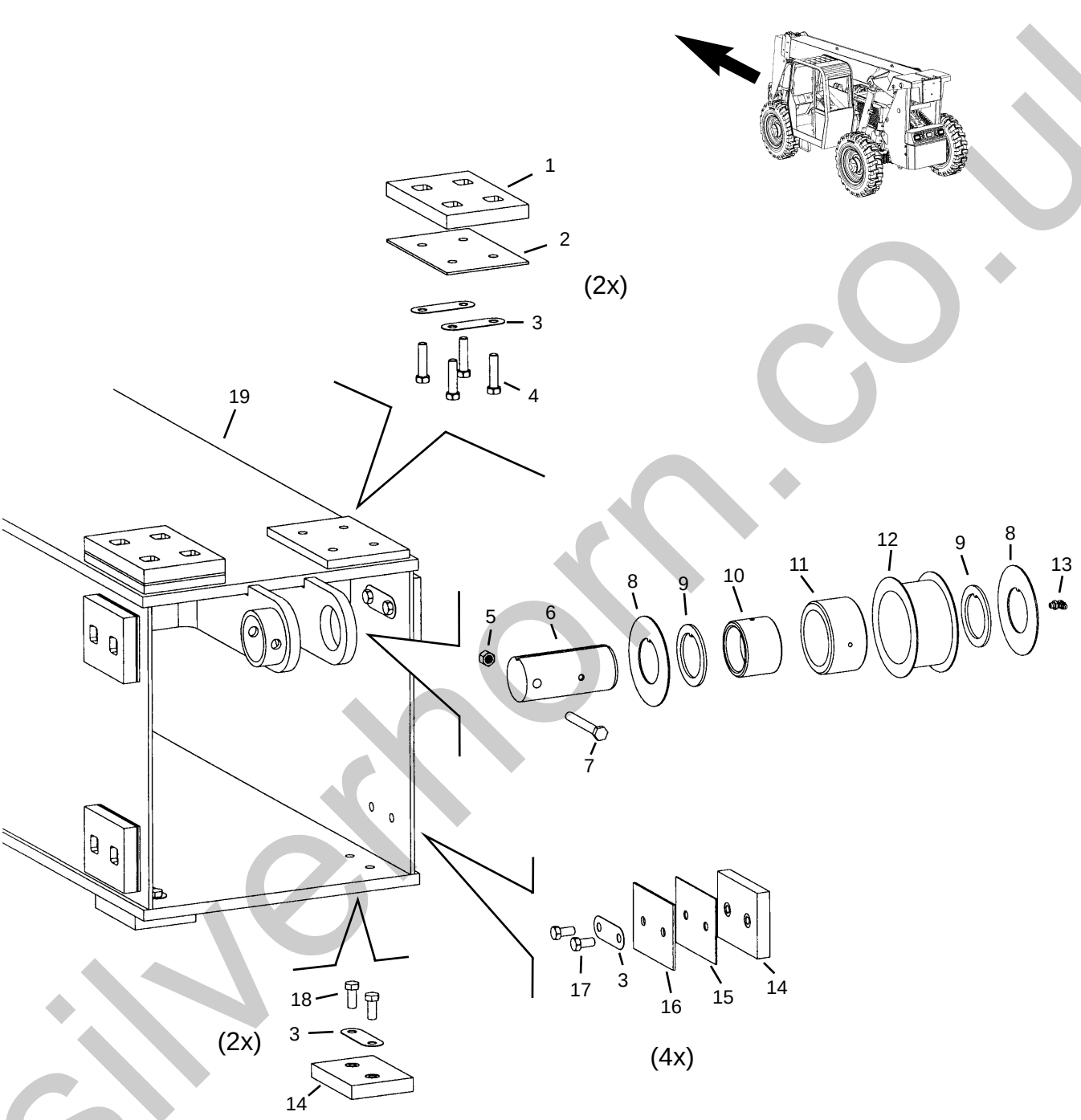

silverhorn.co.uk

1st Intermediate - Rear

Ref. No.	Part No.	Description	Qty. Req.
01	814210	TOP SLIDE PAD 4”X6”	1
02	809504	SHIM 1/8”X4”X6”	1
03	808696	BOLT FLAT LOCK	10
04	813697	3/8”-16X1”-1/2 BOLT	8
05	808663	3/8” NYLON INSERT NUT	2
06	808932	SHEAVE PIN, REAR	1
07	813711	3/8”-16X3” BOLT	2
08	814229	THRUST WASHER	2
09	814223	SPACER	2
10	808478	INNER RING	1
11	808477	ROLLER BEARING	1
12	809882	CHAIN SHEAVE	1
13	51200387	GREASE ZERK 90º	1
14	808693	SLIDE PAD 3”X4”	6
15	808701	SHIM 0.06”X3”X4”	4
16	808702	SHIM 0.105”X3”X4”	4
17	813677	3/8”X3/4” BOLT	8
18	814211	3/8”X7/8” BOLT	4
19	814273	1ST-INTERMEDIATE BOOM	1

silverhorn.co.uk

2nd Intermediate - Front

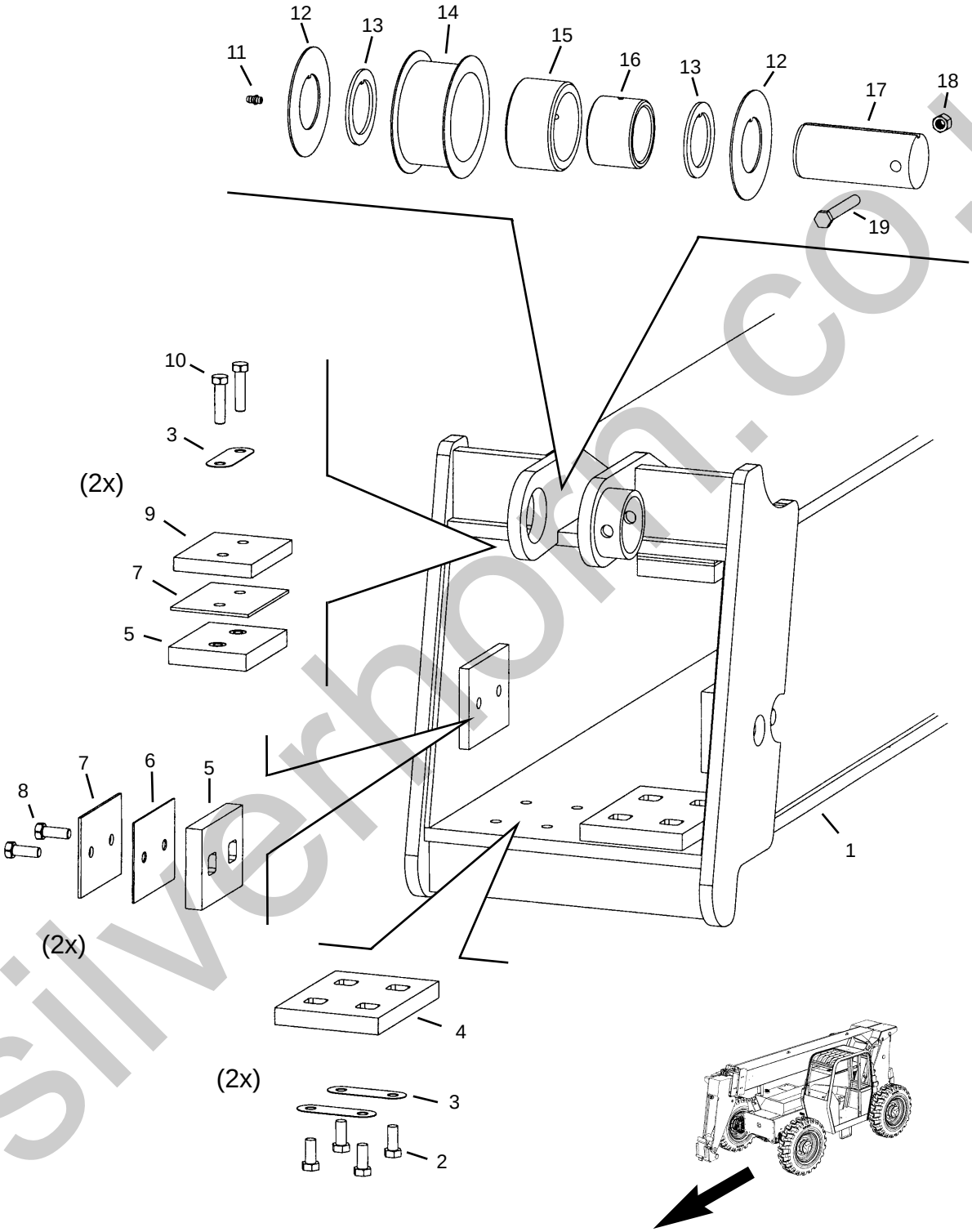

silverhorn.co.uk

2nd Intermediate - Front

Ref. No.	Part No.	Description	Qty. Req.
01	814232	2ND-INTERMEDIATE BOOM	1
02	814211	3/8”X7/8” BOLT	4
03	808696	BOLT FLAT LOCK	6
04	814210	SLIDE PAD 4”X6”	2
05	808693	SLIDE PAD 3”X4”	6
06	808701	SHIM 0.06”X3”X4”	4
07	808702	SHIM 0.105”X3”X4”	6
08	813574	3/8”X1” BOLT	4
09	808747	SPACER 1/2”X3”X4	2
10	813697	3/8”-16X1”-1/2 BOLT	4
11	51200386	GREASE ZERK	1
12	814229	THRUST WASHER	2
13	814223	SPACER	2
14	809882	CHAIN SHEAVE	1
15	808477	ROLLER BEARING	1
16	808478	INNER RING	1
17	808932	SHEAVE PIN, REAR	1
18	808663	3/8” NYLON INSERT NUT	1
19	813711	3/8”-16X3” BOLT	1

silverhorn.co.uk

2nd Intermediate - Rear

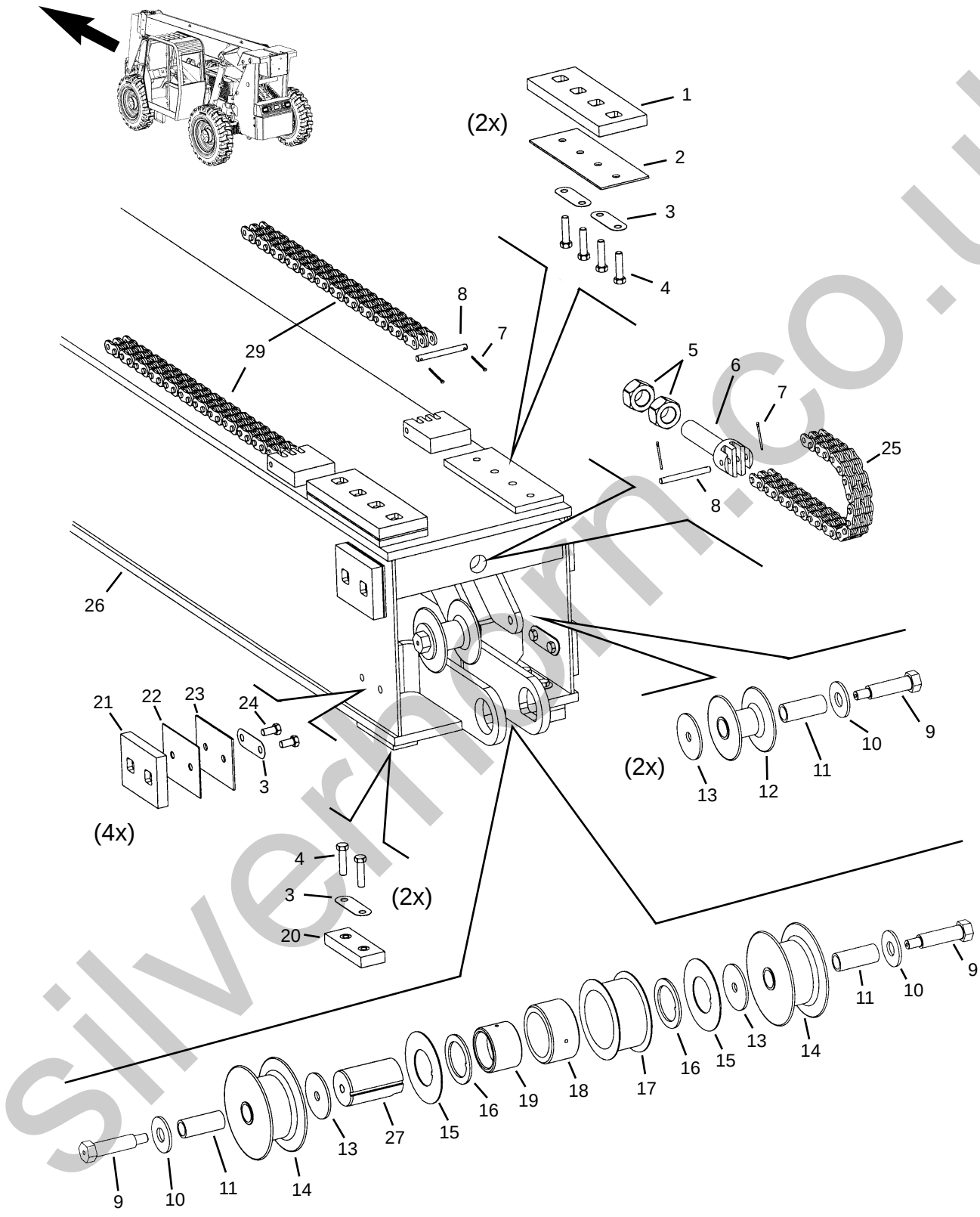

silverhorn.co.uk

Ref. No.	Part No.	Description	Qty. Req.
01	814235	SLIDE PAD 3”X8”	2
02	808819	SHIM 0.125”X3”X8”	2
03	808696	BOLT FLAT LOCK	10
04	813697	3/8”X1-1/2” BOLT	12
05	808584	NUT, ADJUSTABLE CLEVIS	AR
06	814218	CLEVIS, ADJUSTABLE	2
07	814217	3/32”X1-1/4” COTTER PIN	4
08	814217	PIN, ADJUSTABLE CLEVIS	4
09	814372	BOLT, HOSE RETAINER	4
10	814373	3/4” WASHER	4
11	814374	SPACER	4
12	814375	HOSE GUIDE *(upper)*	2
13	814376	WASHER, SHEAVE PIN	4
14	814377	HOSE GUIDE *(lower)*	2
15	814229	THRUST WASHER	2
16	814223	SPACER	2
17	809882	CHAIN SHEAVE	1
18	808477	ROLLER BEARING	1
19	808478	INNER RING	1
20	814233	SLIDE PAD 1-1/2”x4”	2
21	808693	SLIDE PAD 3”X4”	4
22	808701	SHIM 0.06”X3”X4”	4
23	808702	SHIM 0.105”X3”X4”	4
24	813677	3/8”X1” BOLT	8
25[ab]	814220	CHAIN, LEAF *(retract)*	1
26	814232	2ND-INTERMEDIATE BOOM	1
27	814234	PIN, SHEAVE	1
29[ab]	814219	CHAIN, LEAF *(extend)*	2

a *This parts manual shows the same chain(s) on multiple pages. Before ordering chains, refer to the illustration below to avoid ordering the incorrect chain(s) or the incorrect quantities.*

b *Refer to the section Outer Boom - Front for more information.*

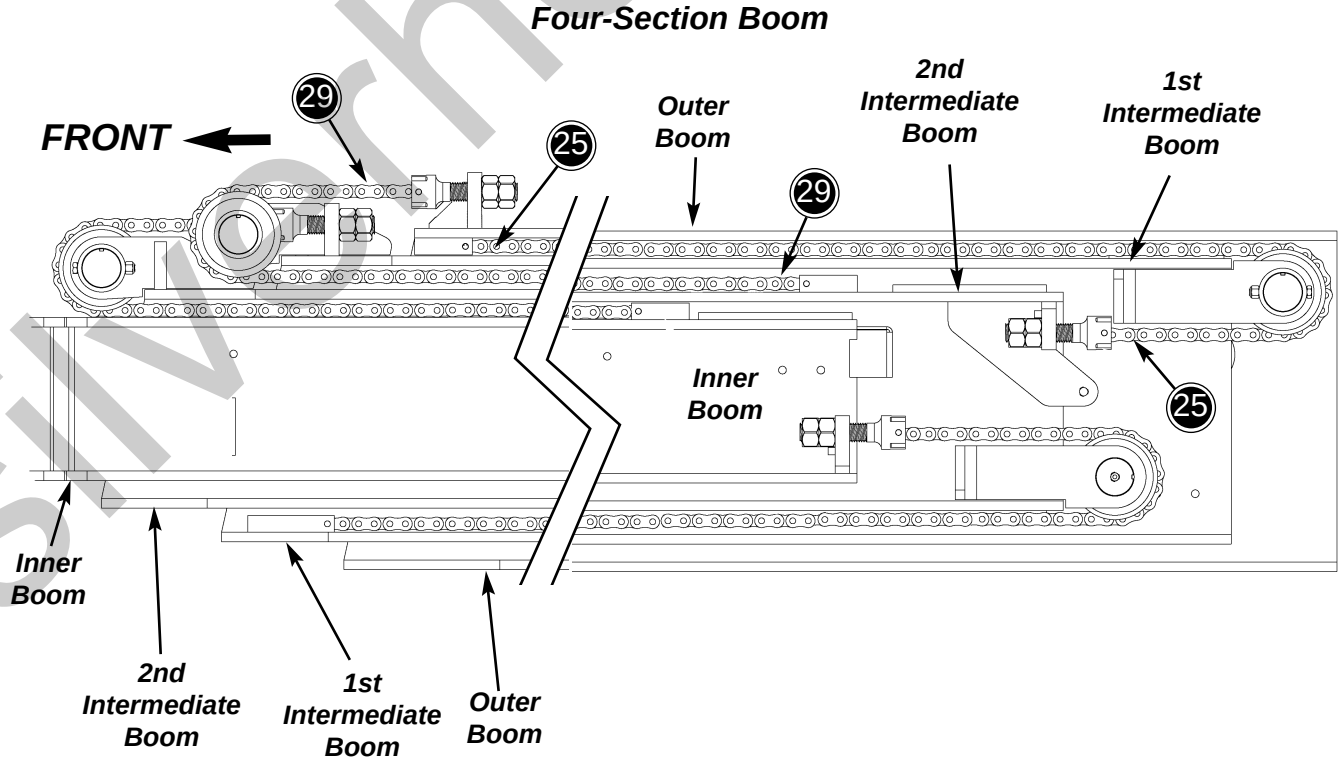

silverhorn.co.uk

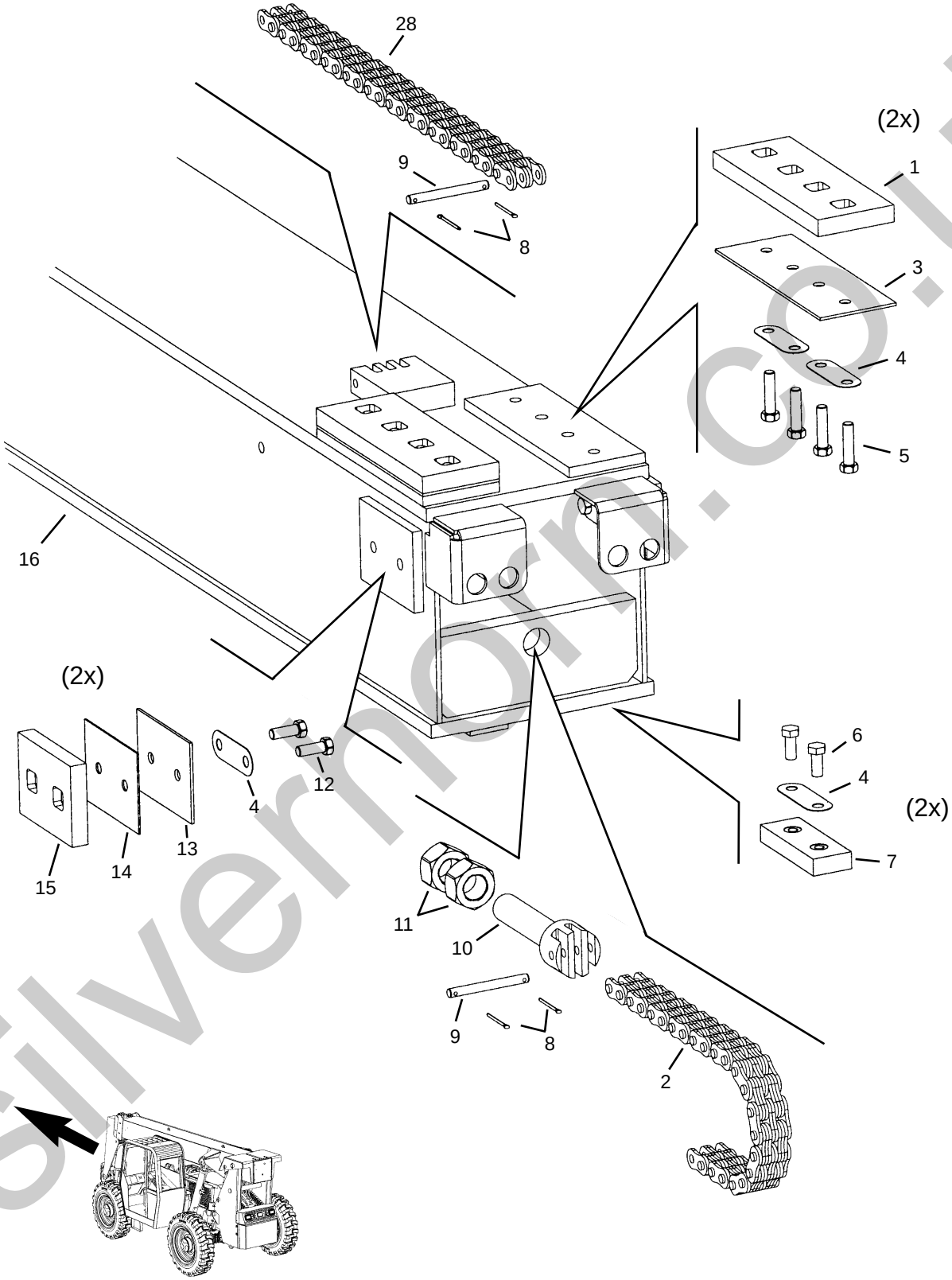

silvermorn.co.uk

Ref. No.	Part No.	Description	Qty. Req.
01	814235	SLIDE PAD 3”X8”	2
02[ab]	814220	LEAF CHAIN *(retract)*	1
03	808819	SHIM 0.125”X3”X8”	2
04	808696	BOLT FLAT LOCK	8
05	813697	3/8”-16X1”-1/2 BOLT	8
06	814211	3/8”-16X7/8” BOLT	4
07	814233	SLIDE PAD 1-1/2”X4”	2
08	814217	3/32”X1-1/4” COTTER PIN	2
09	814217	CHAIN PIN	1
10	814218	ADJUSTABLE CLEVIS	1
11	808584	HEX NUT 1”-8	2
12	813574	3/8”-16X1” BOLT	4
13	808701	SHIM 0.06”X3”X4”	4
14	808702	SHIM 0.105”X3”X4”	4
15	808693	SLIDE PAD 3”X4”	4
16	814236	INNER BOOM.	1
28[ab]	814231	LEAF CHAIN *(extend)*	1

a *This parts manual shows the same chain(s) on multiple pages. Before ordering chains, refer to the illustration below to avoid ordering the incorrect chain(s) or incorrect quantities.*

b *Refer to the section 1st Inner Boom - Rear for more information.*

Four-Section Boom

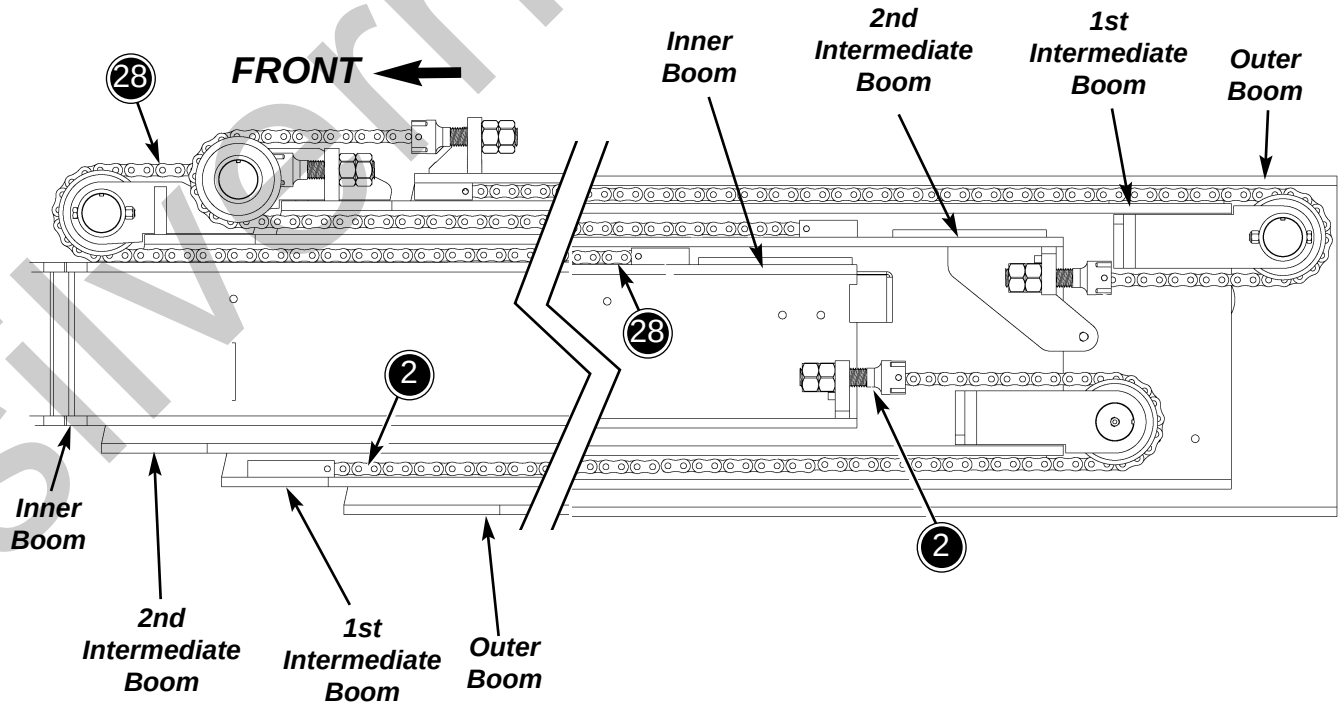

silverhorn.co.uk

Dynattach® Bracket Assembly

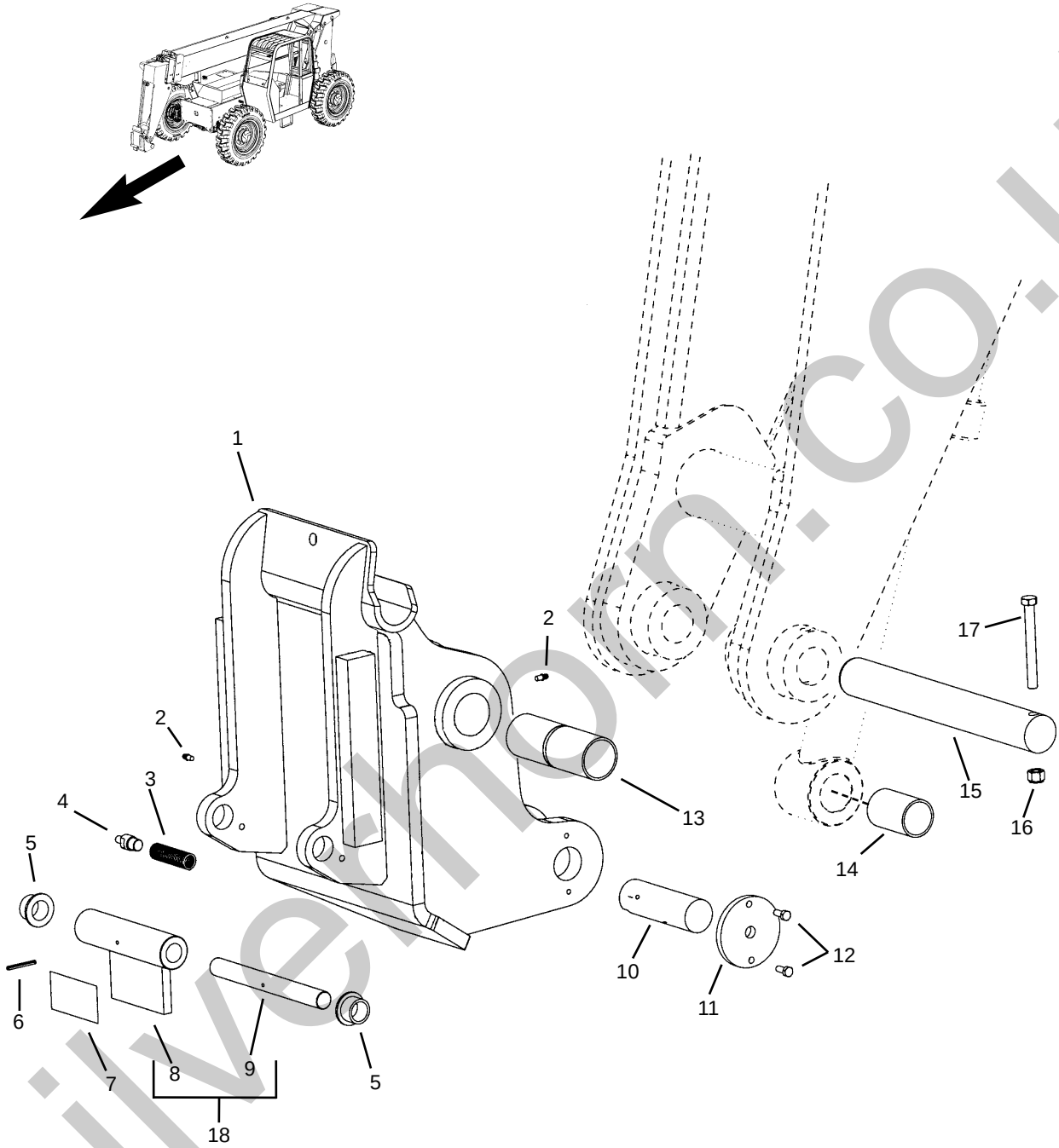

silverhorn.co.uk

Dynattach® Bracket Assembly

Ref. No.	Part No.	Description	Qty. Req.
01	808082	DYNATTACH® WELDMENT *(includes item 5 and 13)*	1
02	808424	1/4" -28 STR GREASE ZERK	2
03	808786	LOCK SPRING	1
04	808787	SPRING MOUNT	1
05	808811	BUSHING	2
06	808633	3/16"X1-3/4" ROLL PIN	1
07	808038	DECAL, DYNATTACH UNLOCKED	1
08[a]	NSS	LOCK WELDMENT	1
09[a]	NSS	PIN	1
10	808875	PIN, TILT CYLINDER	1
11	808873	PIN CAP	1
12	808498	5/16"X3/4" BOLT	2
13	808085	BUSHING	1
14	809150	BUSHING, TILT CYL. *(rod end)*	1
15	808130	PIN, DYNATTACH PIVOT	1
16	808665	1/2"-13 NYLON INSERT NUT	1
17	808649	1/2"-13X4-1/2" BOLT GR8	1
18	808810	LOCK AND PIN ASSEMBLY *(includes items 8 and 9)*	1

a Not sold separately; order item #18 P/N 808810 Lock and Pin Assembly.

silverhorn.co.uk

Boom Extend / Retract Circuit

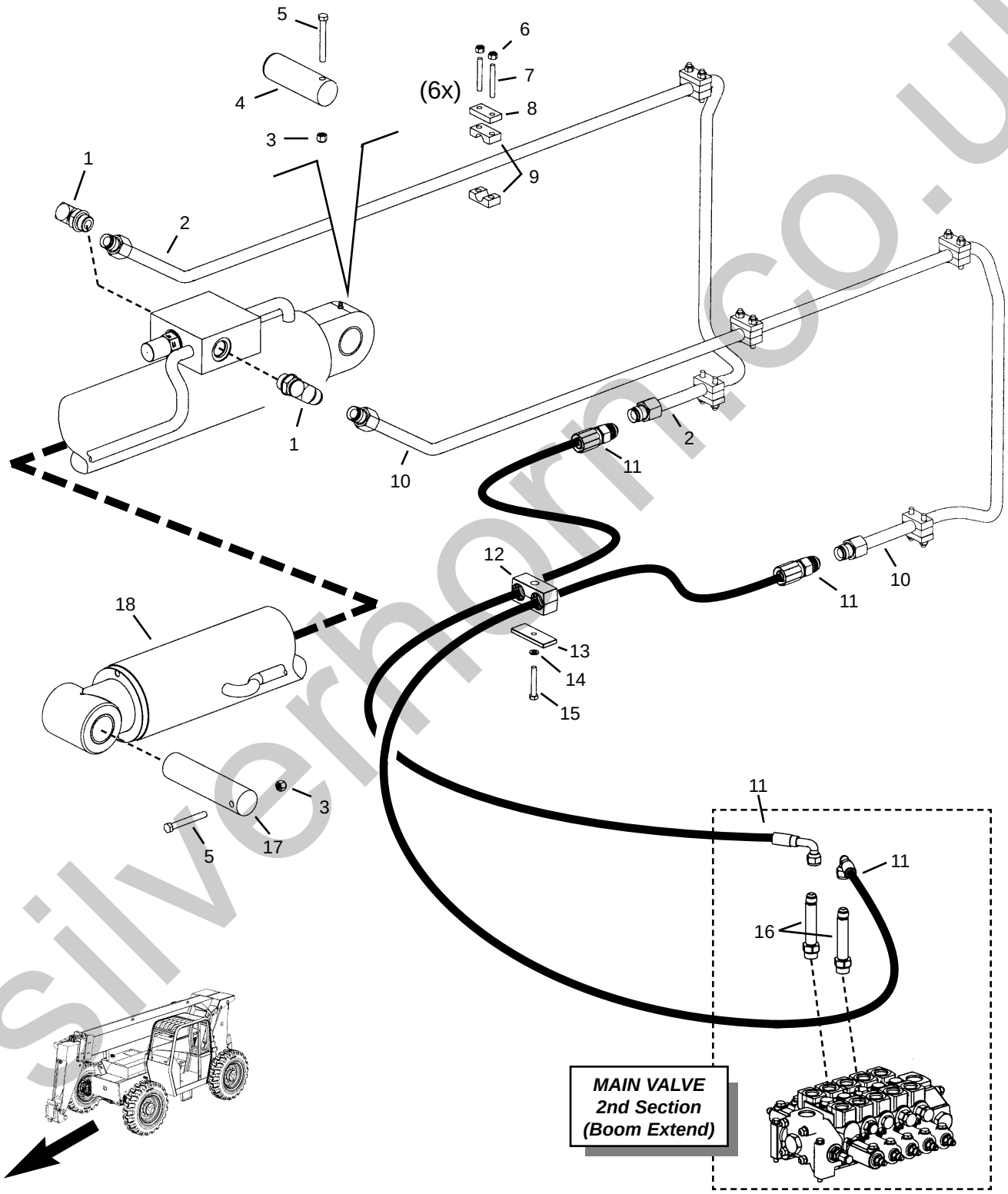

silverhorn.co.uk

Boom Extend / Retract Circuit

Ref. No.	Part No.	Description	Qty. Req.
01	813664	ADAP., -12ORM -12JICM 90º	2
02	51200388	EXTEND CYLINDER TUBE *(right)*	1
03	808663	3/8” NYLON INSERT NUT	2
04	814408	PIN, EXTEND CYL . *(base end)*	1
05	813711	3/8”X3” BOLT	2
06	808662	5/16” NYLON INSERT NUT	12
07	809493	5/16”X2-1/4” STUD	12
08	814322	PLATE	6
09	814414	TUBE CUSHION	6
10	51200389	EXTEND CYLINDER TUBE *(left)*	1
11	51200390	HOSE, -12 H12/DS12 50”	2
12	808149	CLAMP BODY TWIN CUSHION	1
13	808150	PLATE, TOP CLAMP	1
14	808497	5/16” FLAT WASHER	1
15	808642	5/16”-18X2 GR5 BOLT	1
16	813841	ADAP., -12ORM -12JICM LNG	2
17	814406	PIN, EXTEND CYL. *(rod end)*	1
18	814409	EXTEND CYLINDER *(RS10-55)*	1

silverhorn.co.uk

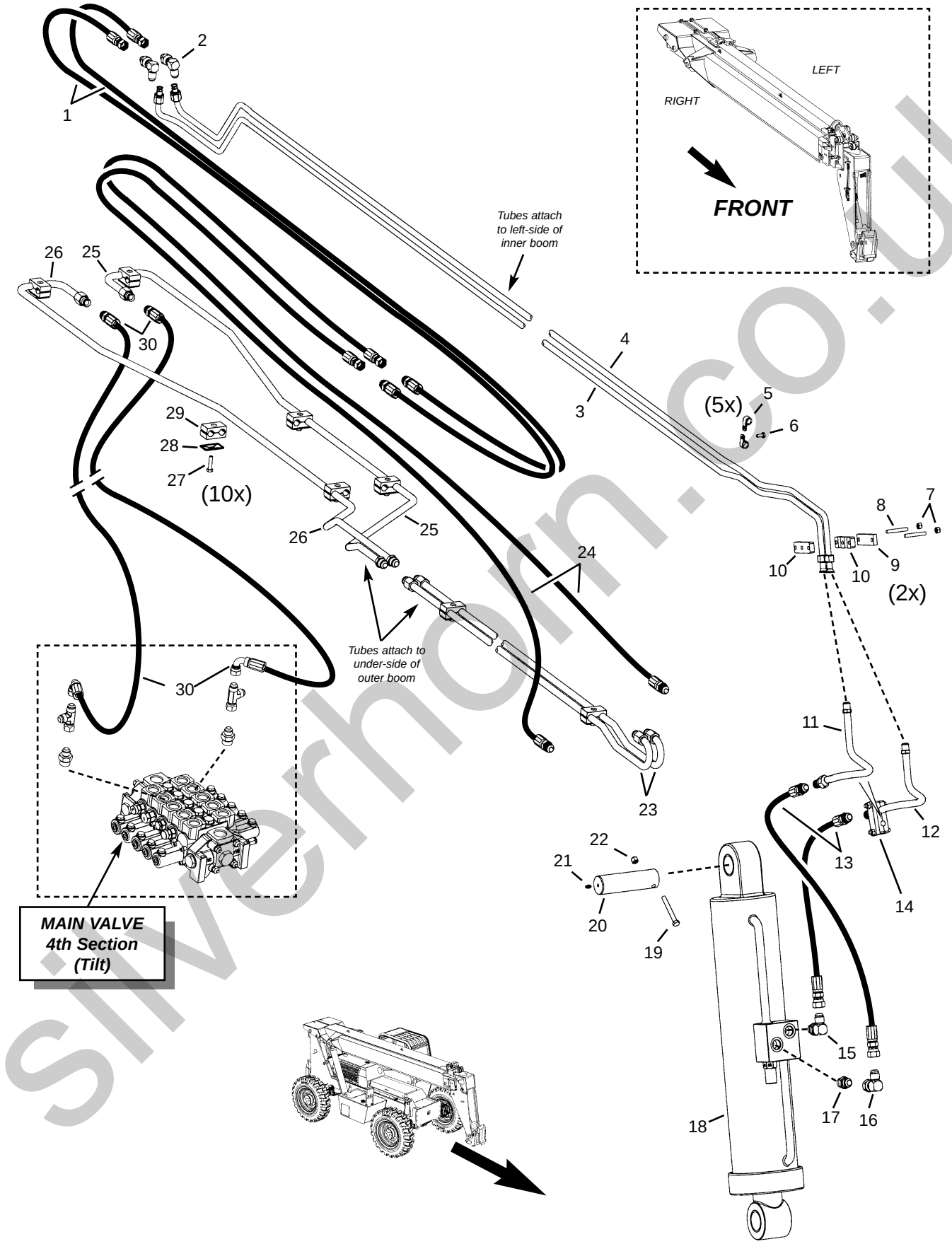

silverhorn.co.uk

Ref. No.	Part No.	Description	Qty. Req.
01	51200391	HOSE, -8 A10/H10 254” *(twin line)*	1
02	814371	ADAP., -8ORB -8JICM 90º BLKHD	2
03	814369	TUBE, TILT CYLINDER	1
04	814370	TUBE, TILT CYLINDER	1
05	814345	CLAMP, VINYL	10
06	813386	1/4”X5/8” BOLT	5
07	808662	5/16” NYLON INSERT NUT	4
08	809493	5/16”X2-1/4” STUD	4
09	808727	PLATE, CUSHION	2
10	814346	CLAMP, DBL. TUBE	4
11	814348	TUBE, TILT CYLINDER	1
12	814349	TUBE, TILT CYLINDER	1
13	814347	HOSE, -8 A10/H8 20”	2
14	NSS	TUBE CLAMP ASSEMBLY *(includes items 7-10)*	1
15	814329	ADAP., -10ORM -10JICM 90º	1
16	814340	ADAP., -10JICFS -10JICM 90º	1
17	814291	ADAP., -10ORM -10JICM	1
18	808859	CYLINDER, TILT	1
19	813711	3/8”X3” BOLT	1
20	808871	PIN, TILT CYLINDER *(base end)*	1
21	51200386	1/4” GREASE ZERK	1
22	808663	3/8” NYLON INSERT NUT	1
23	51200395	TUBE, BOOM TILT/AUX.	2
24	814389	HOSE, -8 A10/H10 268”	2
	814364	HOSE SLEEVE *(not shown)*	1
25	51200392	TUBE, TILT CYLINDER	1
26	51200393	TUBE, TILT CYLINDER	1
27	814344	5/16”X1-1/4” BOLT	10
28	808881	PLATE, CUSHION	10
29	808880	CLAMP, DBL. TUBE 5/8”	10
30	51200394	HOSE, -10 H10/DS10 52”	2

silverhorn.co.uk

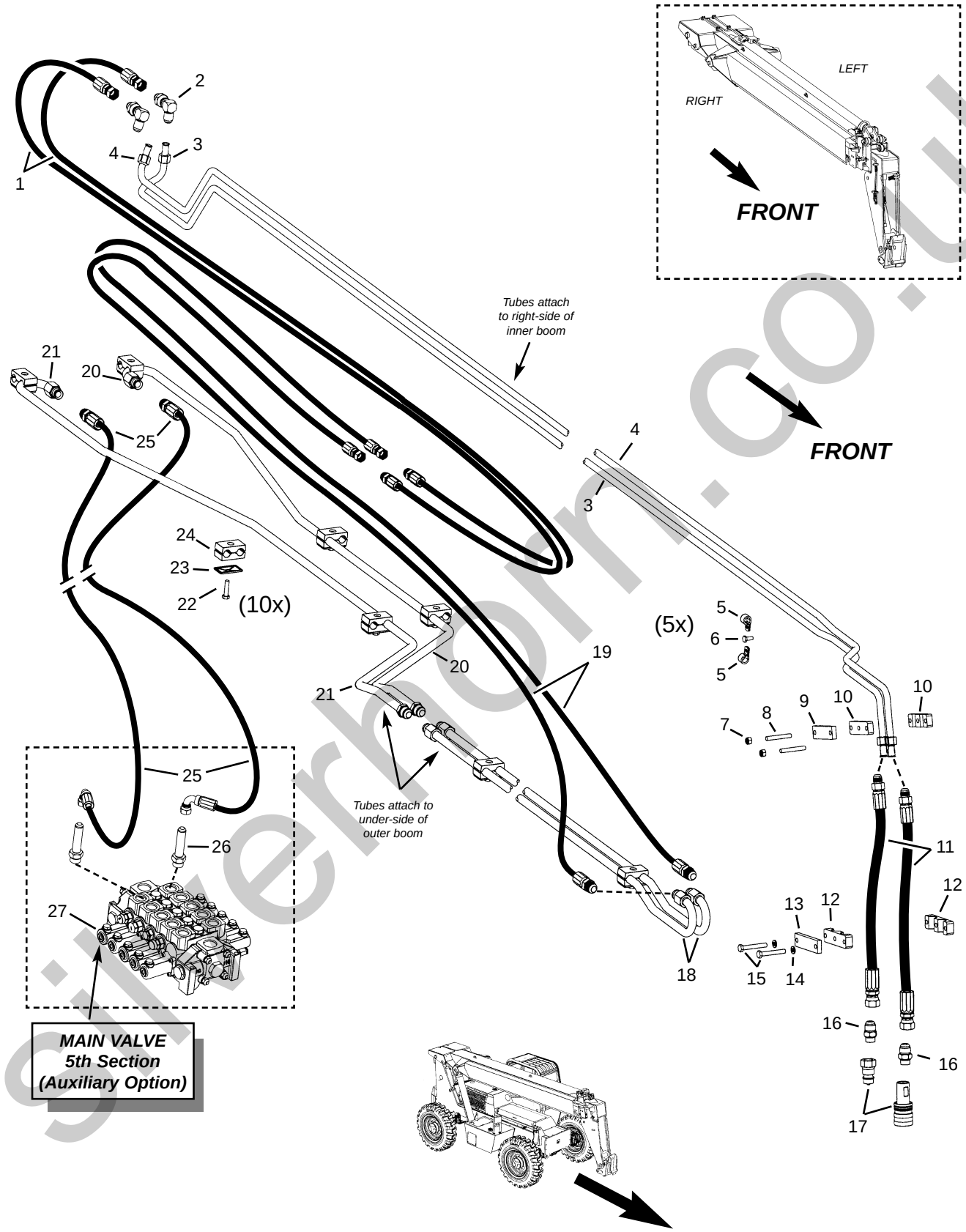

silverhorn.co.uk

Ref. No.	Part No.	Description	Qty. Req.
01	51200396	HOSE, -8 A10/H10 248” *(twin line)*	1
02	814371	ADAP., -8ORB -8JICM 90º BLKHD	2
03	814421	TUBE, AUXILIARY	1
04	814420	TUBE, AUXILIARY	1
05	814345	CLAMP, VINYL	10
06	813386	1/4”X5/8” BOLT	5
07	808662	5/16” NYLON INSERT NUT	2
08	809493	5/16”X2-1/4” STUD	2
09	808727	PLATE, CUSHION	1
10	814346	CLAMP, DBL. TUBE	2
11	814347	HOSE, -8 A10/H8 20”	2
12	808730	CLAMP, DBL. TUBE	2
13	808729	PLATE, DBL. TUBE	1
14	808497	5/16” LOCK WASHER	2
15	814382	5/16”X2-1/4” BOLT	2
16	814323	ADAP., -8ORM -10JICM	2
17	808796	QUICK COUPLER SET	1
18	51200395	TUBE, BOOM TILT/AUX.	2
19	814389	HOSE, -8 A10/H10 268”	2
	814364	HOSE SLEEVE *(not shown)*	1
20	51200397	TUBE, AUXILIARY	1
21	51200398	TUBE, AUXILIARY	1
22	814344	5/16”X1-1/4” BOLT	10
23	808881	PLATE, CUSHION	10
24	808880	CLAMP, DBL. TUBE 5/8”	10
25	51200394	HOSE, -10 H10/DS10 52”	2
26	51200399	ADAP., -12ORM -10JICM LONG	2
27	814496	KIT, AUX HYD SECTION *(Does not include tie bolt kits 808266; order separately, requires four kits.)*	1
	808266	KIT, FIVE SECTION TIE BOLT *(Each kit contains one bolt, two washers and two nuts.)*	4
		-- ITEMS NOT SHOWN --	
--	808064	DECAL, AUXILIARY CONTROL	1

silverhorn.co.uk

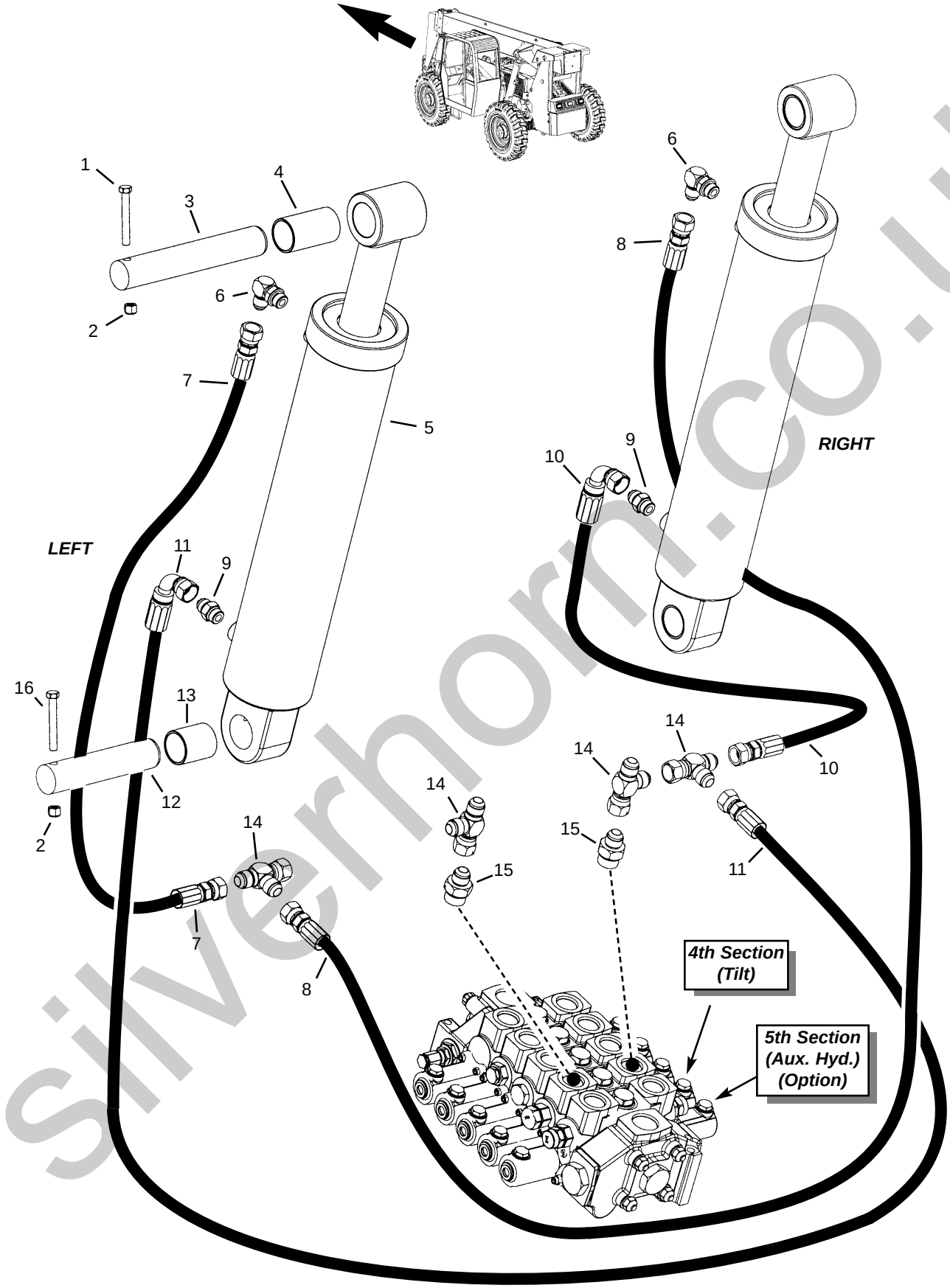

silverhorn.co.uk

Ref. No.	Part No.	Description	Qty. Req.
01	51200400	3/8”X2-3/4” BOLT	2
02	808663	3/8” NYLON LOCK NUT	4
03	808143	PIN, SLAVE CYL. ROD END	2
04	808709	BUSHING *(included with item #5)*	2
05	808860	CYLINDER *(inclds. items 4 & 13)*	2
06	814308	ADAP., -8ORM -8JICM 90º	2
07	51200401	HOSE, -10 A8/A10 48”	1
08	51200402	HOSE, -10 A8/A10 68”	1
09	813708	ADAP., -8ORM -8JICM ST	2
10	51200403	HOSE, -10 A8/A10 32”	1
11	51200404	HOSE, -10 A8/A10 50”	1
12	51200405	PIN, SLAVE CYL. BASE END	2
13	809514	BUSHING *(included with item #5)*	2
14	51200406	ADAP., -10 SWVL RUN TEE	4
15	814262	ADAP., -12ORM -10JICM	2
16	51200407	3/8”X3-1/2” BOLT	2

silverhorn.co.uk

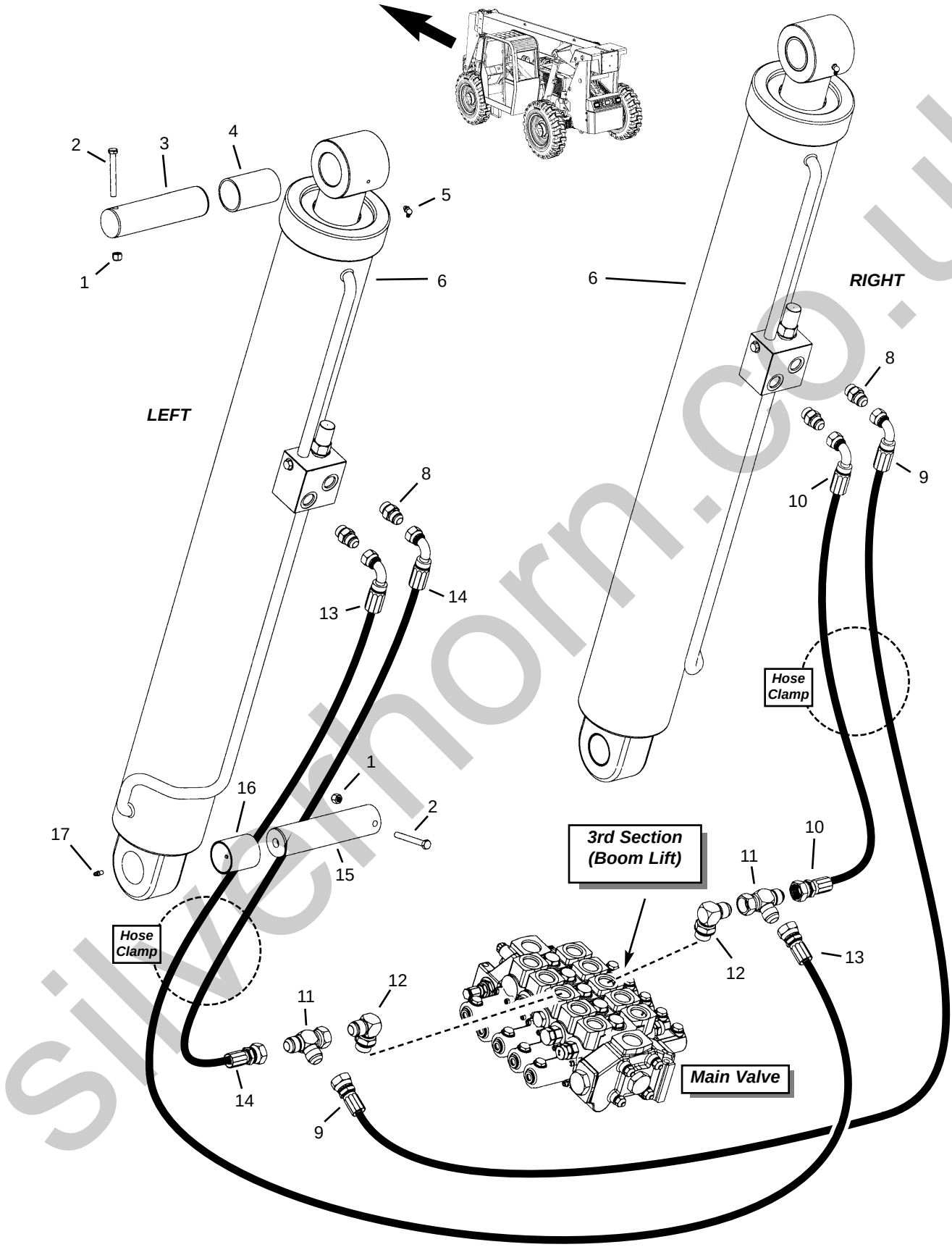

silvernorn.co.uk

Ref. No.	Part No.	Description	Qty. Req.
01	808663	3/8” NYLON LOCK NUT	4
02	813711	3/8”X3” BOLT	4
03	814297	PIN, LIFT CYLINDER ROD END	2
04	814296	BUSHING *(inclds. with #6 and #7)*	2
05	808423	GREASE ZERK	2
06[a]	814290	CYLINDER, LIFT	2
08	814291	ADAP., -10ORM -10JICM ST.	4
09	51200408	HOSE, -10 A12/DS10 72”	1
10	51200409	HOSE, -10 A12/DS10 52”	1
11	51200410	ADAP., -12 JIC	2
12	813664	ADAP., -12 ORM -12JICM 90º	2
13	51200408	HOSE, -10 A12/DS10 72”	1
14	51200409	HOSE, -10 A12/DS10 52”	1
15	814303	PIN, LIFT CYL. BASE END	2
16	808858	BUSHING *(included with 6 and 7)*	2
17	808671	FASTENER, RETAIN NUT	4
18[b]	808730	CUSHION, HOSE 7/8” TWIN	4
19[b]	808729	PLATE, TWIN-WIDE TOP	2
20	51200111	5/16”-18X2-1/2” BOLT	4

a Bushings are included with the lift cylinder.

b Refer to “Hoods and Covers” pages in the “Chassis” section for the location of the lift cylinder hose clamps.

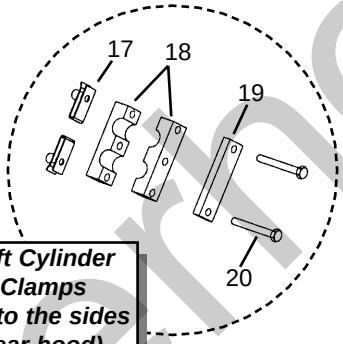

Boom Lift Cylinder Hose Clamps (attaches to the sides of the rear hood)

silvernorn.co.uk

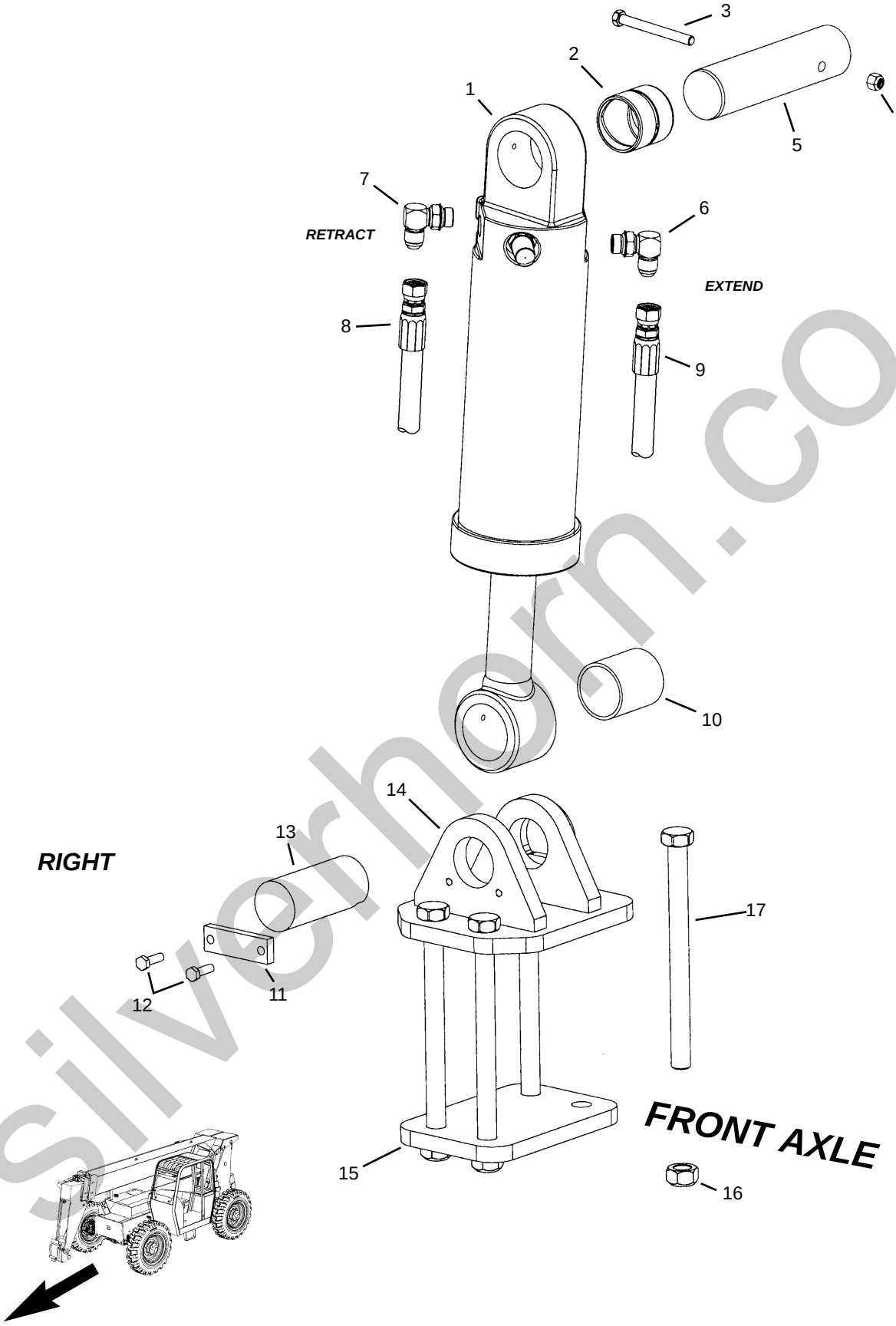

silverhorn.co.uk

Ref. No.	Part No.	Description	Qty. Req.
01	808304	LEVEL CYLINDER	1
02	808756	BRONZE BEARING	1
03	808611	3/8”-16X3-1/2” BOLT	1
04	808663	3/8”-16 NYLON INSERT NUT	1
05	808712	PIN, CYLINDER *(base end)*	1
06	808803	ADAP., W/ORIFICE -8ORM -8JICM	1
07	814308	ADAP., -8ORM -8JICM 90º	1
08	808297	HOSE, -8 A8/A8 168”	1
09	808302	HOSE, -8 A8/A8 190”	1
10	808708	BRONZE BEARING	1
11	808727	PLATE	1
12	813598	5/16” X 1-1/4” BOLT	2
13	814522	PIVOT PIN *(rod end)*	1
14	51200261	FRAME LEVEL MNT *(front axle)*	1
15	51200255	PLATE, MOUNT	1
16	808583	3/4”-10 STOVER NUT	4
17	51200254	3/4”-10X10” GR8 BOLT	4

HOSE LOCATOR

08 FRAME LEVEL CYLINDER “OUTSIDE” *(retract)*

09 FRAME LEVEL CYLINDER “INSIDE” *(extend)*

STABILIZING CYL MANIFOLD “TOP PORT” *(located on left inside rear of frame)*

MAIN VALVE *(1st section - right side)*

silverhorn.co.uk

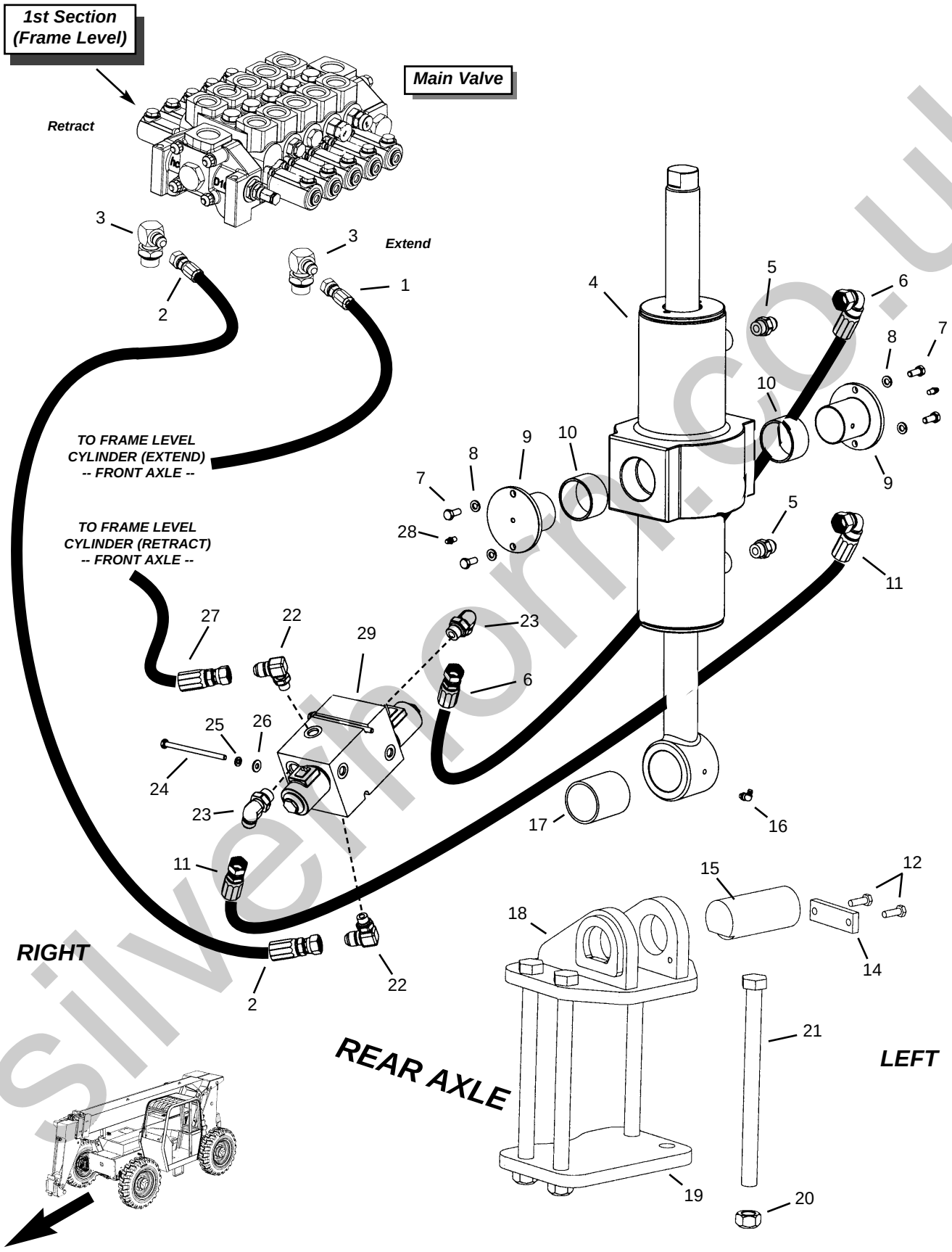

silverhorn.co.uk

Frame Stabilizing

Ref. No.	Part No.	Description	Qty. Req.
01	808302	HOSE, -8 A8/A8 190”	1
02	809200	HOSE, -6 A8/A8 28”	1
03	51200411	ADAP., -12ORM -8JICM 90º	2
04	808117	FRAME STABILIZING CYLINDER	1
05	813708	ADAP., -8ORM -8JICM STR	2
06	808295	HOSE, -8 A8/DS8 46”	1
07	808498	5/16”-18X3/4” BOLT	4
08	808497	5/16” LOCK WASHER	4
09	808879	TRUNNION PIVOT PIN	2
10	808878	BUSHING	2
11	808295	HOSE, -8 A8/DS8 46”	1
12	813598	5/16” X 1-1/4” BOLT	2
14	808727	LOCK, PIVOT PIN	1
15	814522	LEVEL CYL. PIN *(rod end)*	1
16	808423	1/4”-28 GREASE ZERK 90º	1
17	808858	BUSHING *(rod end)*	1
18	51200256	STABILIZING MOUNT *(rear axle)*	1
19	51200255	PLATE, MOUNT	1
20	808583	3/4”-10 NUT GR8	4
21	51200254	3/4”-10X10” GR8 BOLT	4
22	51200412	ADAP., -6ORM -8JICM 90º	2
23	814308	ADAP., -8ORM -8JICM 90º	2
24	809201	1/4”-20X4” BOLT GR5	1
25	808589	1/4” LOCK WASHER	1
26	808588	1/4” FLAT WASHER	1
27	808297	HOSE, -8 A8/A8 168”	1
28	808424	1/4”-28 GREASE ZERK STR	1
29	808305	MANIFOLD, STABILIZING CYL.	1

Hose Locator

Ref No.	From Port	To Port
01	MAIN VALVE, 1ST SECTION *(extend)*	FRAME LEVEL CYLINDER “INSIDE” *(extend)*
02	MAIN VALVE, 1ST SECTION *(retract)*	STABILIZING CYL. MANIFOLD “BOTTOM” *(retract)*
06	STABILIZING CYL. MANIFOLD “REAR”	STABILIZING CYLINDER “TOP PORT”
11	STABILIZING CYL. MANIFOLD “FRONT”	STABILIZING CYLINDER “BOTTOM PORT”
27	STABILIZING CYL. MANIFOLD “TOP”	FRAME LEVEL CYLINDER “OUTSIDE” *(retract)*

silverhorn.co.uk

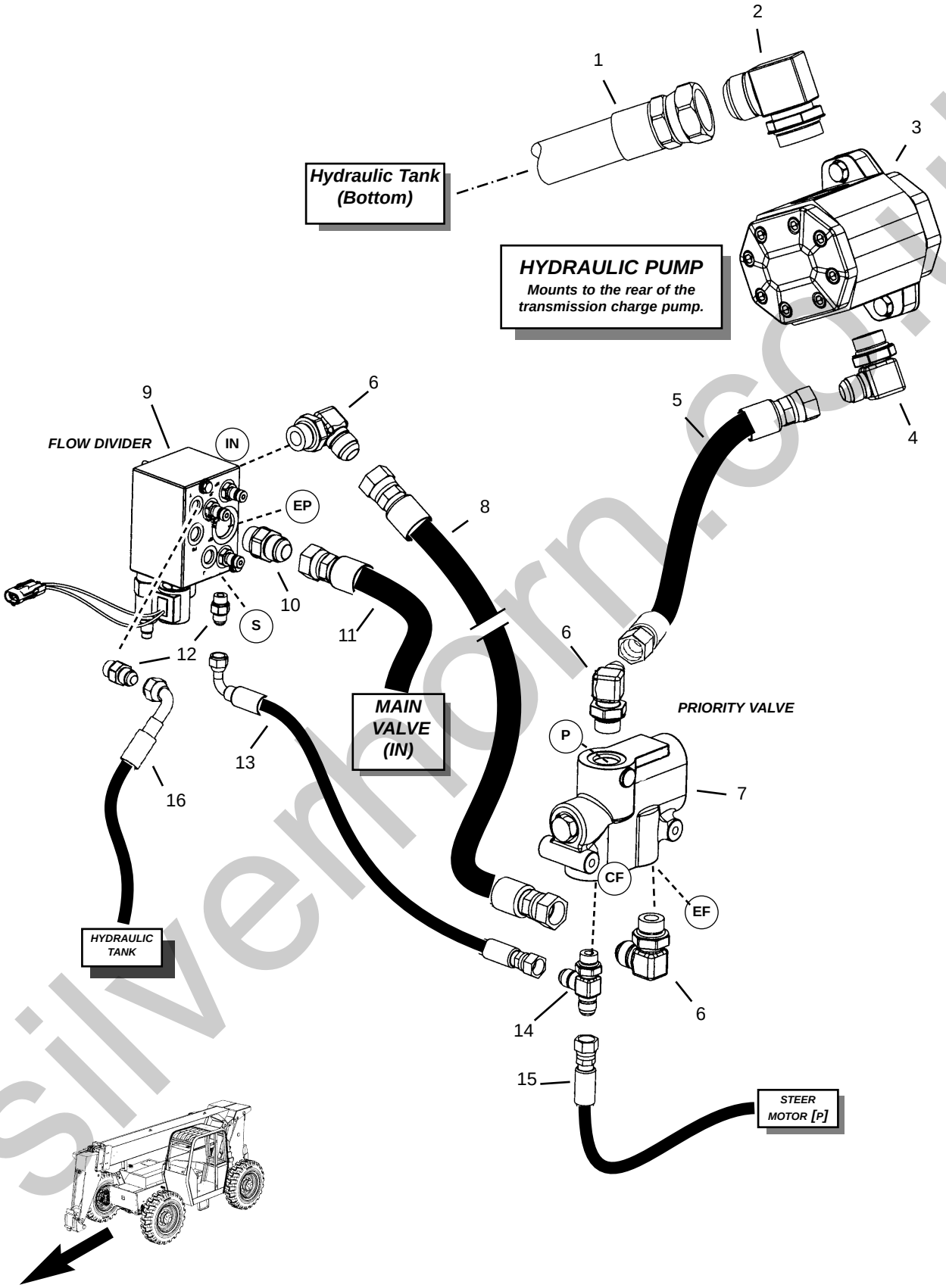

silverhorn.co.uk

Ref. No.	Part No.	Description	Qty. Req.
01	808713	HOSE, -24 A24/A24 35”	1
02	809265	ADAP., -24ORM -24JICM 90º	1
03	808146	HYDRAULIC PUMP	1
	808469	GASKET *(not shown)*	1
	808629	1/2”-13x1-1/2” BOLT *(not shown)*	2
04	813746	ADAP., -16ORM -12JICM 90º	1
05	51200413	HOSE, -12 A12/A12 11-1/2”	1
06	813664	ADAP., -12ORM -12JICM	3
07	51200414	PRIORITY VALVE	1
08	808751	HOSE, -12 A12/A12 21”	1
09	808126	FLOW DIVIDER VALVE	1
10[a]	814326	ADAP., -12ORM -12JICM	1
11[a]	809540	HOSE, -12 A12/DS12 114”	1
12	813596	ADAP., -6ORM -6JICM	2
13	808275	HOSE, -6 A8/DS6 19”	1
14	814447	ADAP., -8ORM -8JICM TEE	1
15	808274	HOSE, -6 A8/DS8 50”	1
16	808326	HOSE, -6 A6/DS6 18”	1

a *Note: If the unit is equipped with the outrigger option, there will be two additional hoses. Hose P/N 808268; -12 A12/DS12 74” will attach to fitting item #10 and will go to the outrigger valve. Hose P/N 51200123; -12 H12/A12 41” will return from the outrigger valve and will connect to the existing hose, item 11. Please refer to the outrigger pages located in the Chassis section for more information.*

HOSE LOCATOR

01	HYDRAULIC PUMP “IN”	HYDRAULIC TANK “BOTTOM - OUT”
05	HYDRAULIC PUMP “OUT”	PRIORITY VALVE “P” *(top of valve)*
08	PRIORITY VALVE “EF” *(bottom of valve)*	FLOW DIVIDER “IN” *(side)*
11[a]	FLOW DIVIDER “EP” *(front of valve) (STANDARD)*	MAIN VALVE “IN”
11[a]	OUTRIGGER VALVE/HOSE *(OUTRIGGER OPTION)*	MAIN VALVE “IN”
13	PRIORITY VALVE “CF” *(bottom of valve - tee)*	FLOW DIVIDER “S” *(bottom of valve)*
15	PRIORITY VALVE “CF” *(bottom of valve - tee)*	STEER MOTOR “P”
16	FLOW DIVIDER “T” *(front of valve)*	HYDRAULIC TANK RETURN *(return manifold)*

silverhorn.co.uk

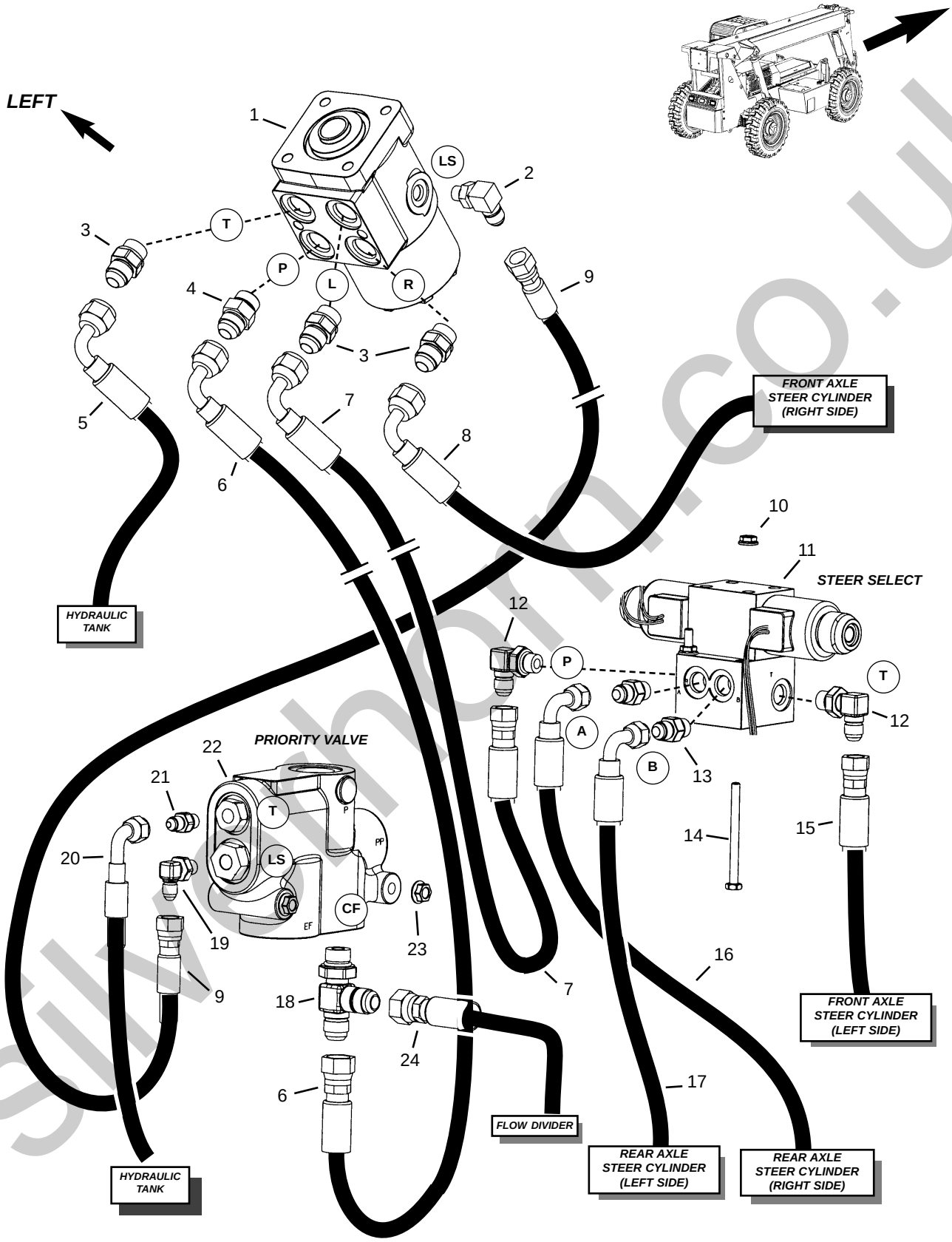

silvanhorn.co.uk

Ref. No.	Part No.	Description	Qty. Req.
01	808101	STEER MOTOR	1
02	813550	ADAP., -4ORM -4JICM 90º	1
03	813708	ADAP., -8ORM -8JICM STR	3
04	808763	VALVE, CHECK	1
05	808716	HOSE, -6 A6/DS8 52”	1
06	808274	HOSE, -6 A8/DS8 50”	1
07	808285	HOSE, -6 A6/DS8 58”	1
08	51200263	HOSE, -6 A8/DS8 98”	1
09	808276	HOSE, -4 A4/A4 52”	1
10	808545	1/4”-20 WHIZ LOCK NUT	2
11	808877	VALVE, STEER SELECT	1
12	813597	ADAP., -6ORM -6JICM 90º	2
13	813596	ADAP., -6ORM -6JICM STR	2
14	808627	1/4”-20X3” BOLT	2
15	51200262	HOSE, -6 A6/A8 56”	1
16	808885	HOSE, -6 A6/A8 100”	1
17	808885	HOSE, -6 A6/A8 100”	1
18	814447	ADAP., -8ORM -8JICM TEE	1
19	813550	ADAP., -4ORM -4JICM 90º	1
20	814501	HOSE, -4 A6/DS6 20”	1
21	814450	ADAP., -6ORM -4JICM STR	1
22	51200414	PRIORITY VALVE	1
23	808555	5/16”-18 WHIZ LOCK NUT	2
24	808275	HOSE, -6 A8/DS6 19”	1

silverhorn.co.uk

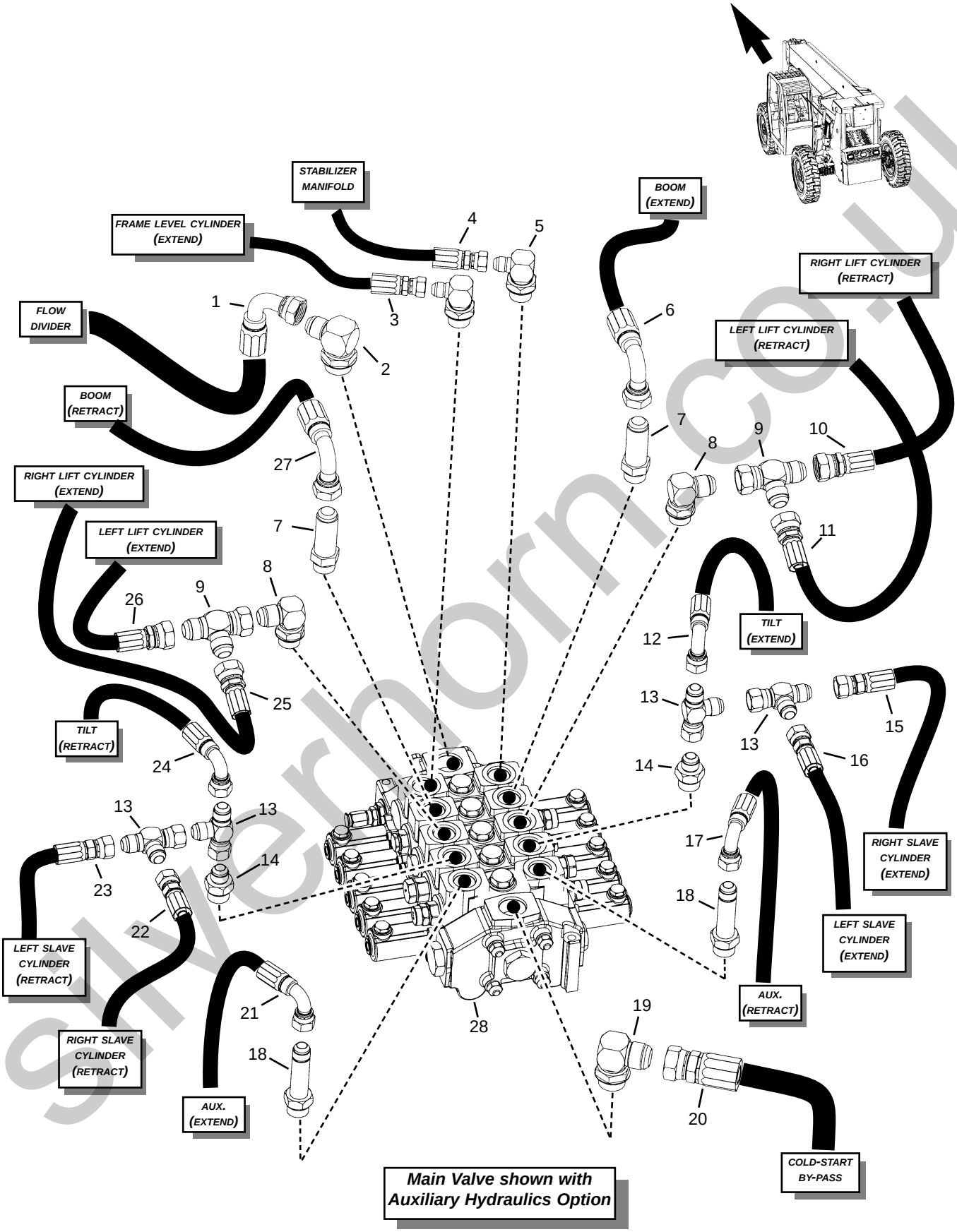

Main Valve shown with Auxiliary Hydraulics Option

silverhorn.co.uk

Ref. No.	Part No.	Description	Qty. Req.
01	809540	HOSE, -12 A12//DS12 114”	1
02	813746	ADAP., -16ORM -12JICM 90º	1
03	808302	HOSE, -8 A8/A8 190”	1
04	809200	HOSE, -8 A8/A8 26”	1
05	51200411	ADAP., -12ORM -8JICM 90º	2
06	51200390	HOSE, -12 H12/DS12 50”	1
07	813841	ADAP., -12ORM -12JICM LNG	2
08	813664	ADAP., -12ORM -12JICM	2
09	51200410	ADAP., -12 SWVL RUN TEE	2
10	51200409	HOSE, -10 A12/DS10 52”	1
11	51200408	HOSE, -10 A12/DS10 72”	1
12	51200394	HOSE, -10 H10/DS10 52”	1
13	51200406	ADAP., -10 SWVL RUN TEE	4
14	814262	ADAP., -12ORM -10JICM	2
15	51200403	HOSE, -10 A8/A10 32”	1
16	51200404	HOSE, -10 A8/A10 50”	1
17	51200394	HOSE, -10 H10/DS10 52”	1
18	51200399	ADAP., -12ORM -10JICM LNG	2
19	813743	ADAP., -16ORM -16JICM	1
20	51200144	HOSE, -16 A16/DS16 29”	1
21	51200394	HOSE, -10 H10/DS10 52”	1
22	51200402	HOSE, -10 A8/A10 68”	1
23	51200401	HOSE, -10 A8/A10 48”	1
24	51200394	HOSE, -10 H10/DS10 52”	1
25	51200408	HOSE, -10 A12/DS10 72”	1
26	51200409	HOSE, -10 A12/DS10 52”	1
27	51200390	HOSE, -12 H12/DS12 50”	1
28		MAIN VALVE	1
	808139	*Without Aux. Hydraulics (4-sections)*	
	51200415	*With Aux. Hydraulics (5-sections)*	

NOTE: Refer to next page for information regarding the joystick control hoses.

silverhorn.co.uk

Main Valve - Dual Controllers

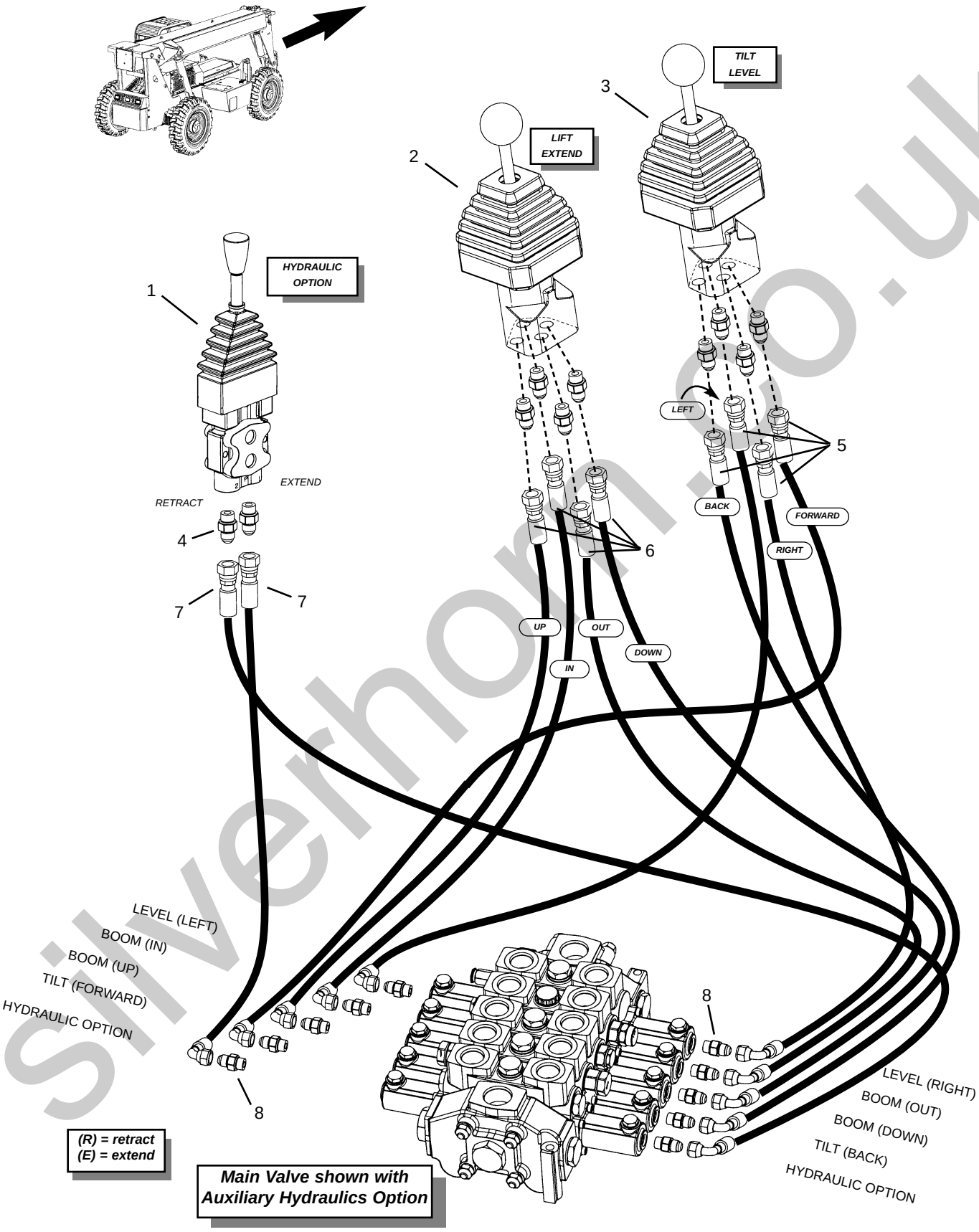

Main Valve shown with Auxiliary Hydraulics Option

silverhorn.co.uk

Ref. No.	Part No.	Description	Qty. Req.
01	808139	CONTROLLER, AUX. HYD	1
02	808139	CONTROLLER, LIFT/EXTEND	1
03	808263	CONTROLLER, TILT/LEVEL	1
04	813596	ADAP., -6ORM -6JICM STR	AR
05	808284	HOSE, -4 A6/DS6 120”	4
06	808283	HOSE, -4 A6/DS6 108”	4
07	808270	HOSE, -4 A6/DS6 102”	2
08	808409	ADAP., 1/4BSP -6JICM STR	AR

a *The illustration on the facing page shows the (optional) auxiliary hydraulic work section with the main valve.*

silverhorn.co.uk

Main Valve - Radio Remote Control Option

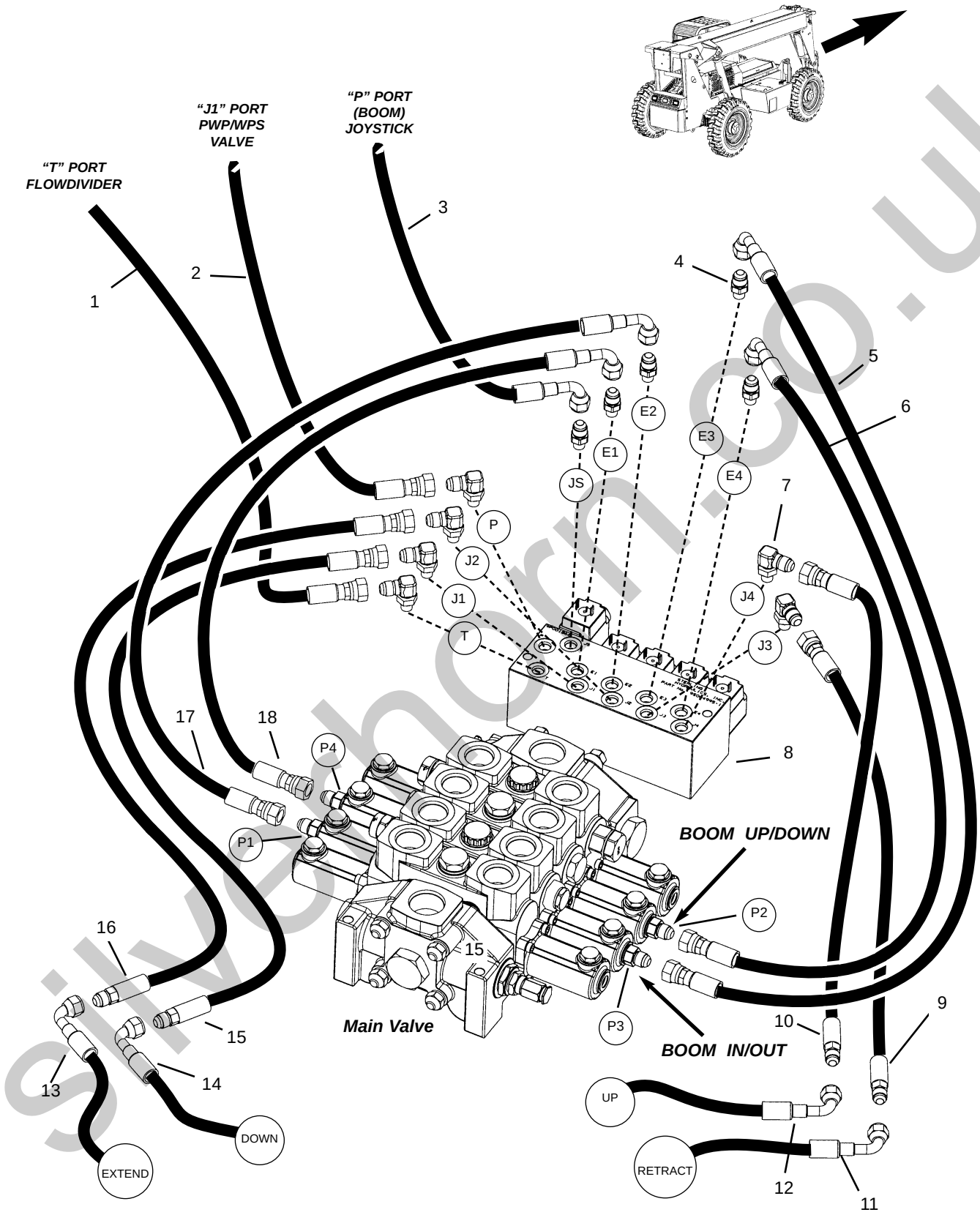

silverthorn.co.uk

Main Valve - Radio Remote Option

Ref. No.	Part No.	Description	Qty. Req.
01	809766	HOSE, -6 A6/A6 130”	1
02	809773	HOSE, -6 A6/A6 110”	1
03	809764	HOSE, -4 H6/A6 109”	1
04	814450	ADAP., -4ORM -6JICM STR	5
05	808850	HOSE, -4 A6/DS6 26”	1
06	808850	HOSE, -4 A6/DS6 26”	1
07	814431	ADAP., -4ORM -6JICM 90º	6
08	809732	MANIFOLD, RADIO REMOTE	1
09	809765	HOSE, -6 A6/H6 20”	1
10	809765	HOSE, -6 A6/H6 20”	1
11	808283	HOSE, -4 A6/DS6 108”	4
12	808283	HOSE, -4 A6/DS6 108”	4
13	808283	HOSE, -4 A6/DS6 108”	4
14	808283	HOSE, -4 A6/DS6 108”	4
15	809765	HOSE, -6 A6/H6 20”	1
16	809765	HOSE, -6 A6/H6 20”	1
17	808850	HOSE, -4 A6/DS6 26”	1
18	808850	HOSE, -4 A6/DS6 26”	1

silverhorn.co.uk

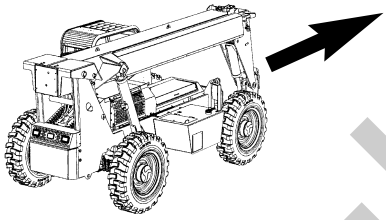

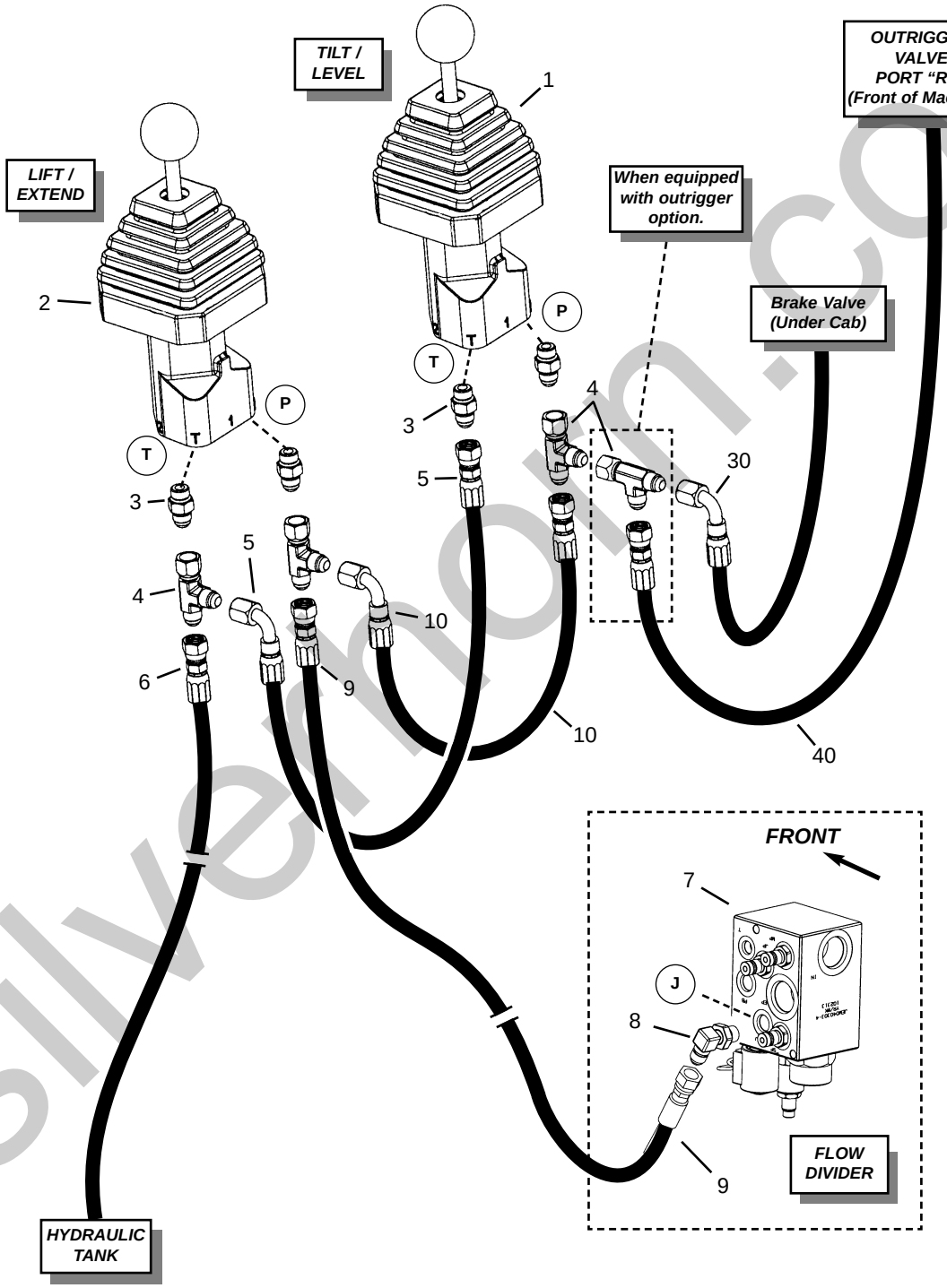

silverhorn.co.uk

Ref. No.	Part No.	Description	Qty. Req.
01	808263	CONTROLLER, TILT/LEVEL	1
02	808139	CONTROLLER, LIFT/EXTEND	1
03	813596	ADAP., -6ORM -6JICM STR	4
04	814461	ADAP., -6 SWIVEL RUN TEE	AR
05	808882	HOSE, -4 A6/DS6 17”	1
06	808282	HOSE, -4 A6/DS6 35”	1
07	808126	MANIFOLD, JOYSTICK RELIEF	1
08	813597	ADAP., -6ORM -6JICM 90º	1
09	808265	HOSE, -4 A6/A6 54”	1
10	808882	HOSE, -4 A6/DS6 17”	1
30	808282	HOSE, -4 A6/DS6 35”	1
40[a]	808852	HOSE, -4 A6/A6 96”	1

a When equipped with outrigger option.

silverhorn.co.uk

Dual Controllers - Auxiliary Hydraulics

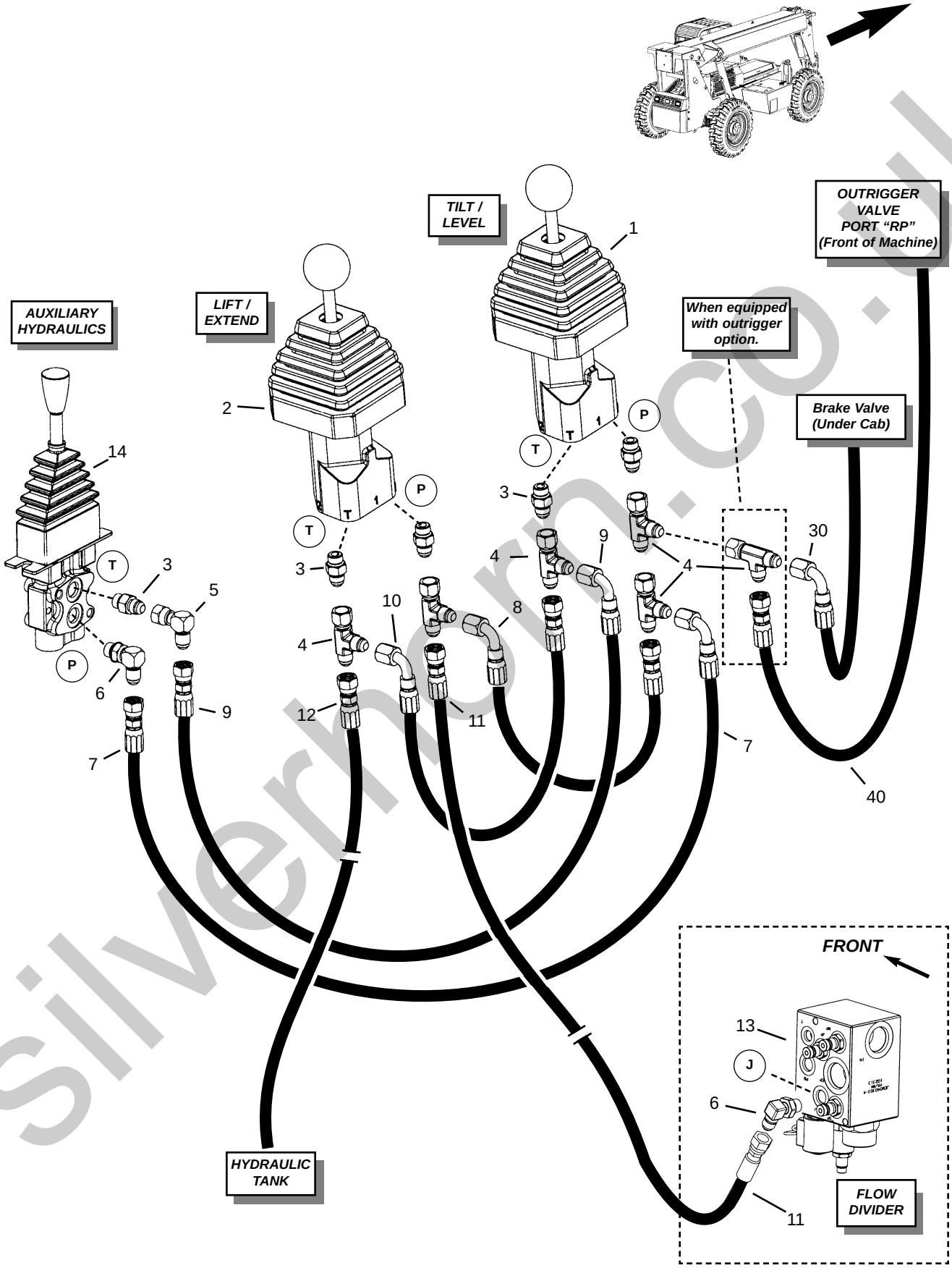

silverhorn.co.uk

Ref. No.	Part No.	Description	Qty. Req.
01	808263	CONTROLLER, TILT/LEVEL	1
02	808139	CONTROLLER, LIFT/EXTEND	1
03	813596	ADAP., -6ORM -6JICM STR	AR
04	814461	ADAP., -6 SWIVEL RUN TEE	AR
05	814506	ADAP., -6JICM -6JICFS 90º	AR
06	813597	ADAP., -6ORM -6JICM 90º	AR
07	808850	HOSE, -4 A6/DS6 26”	1
08	808882	HOSE, -4 A6/DS6 17”	1
09	808850	HOSE, -4 A6/DS6 26”	1
10	808882	HOSE, -4 A6/DS6 17”	1
11	808265	HOSE, -4 A6/A6 54”	1
12	808282	HOSE, -4 A6/DS6 35”	1
13	808126	MANIFOLD, JOYSTICK RELIEF	1
14	808139	CONTROLLER, AUX. HYD	1
30	808282	HOSE, -4 A6/DS6 35”	1
40[a]	808852	HOSE, -4 A6/A6 96”	1

a When equipped with outrigger option.

silverhorn.co.uk

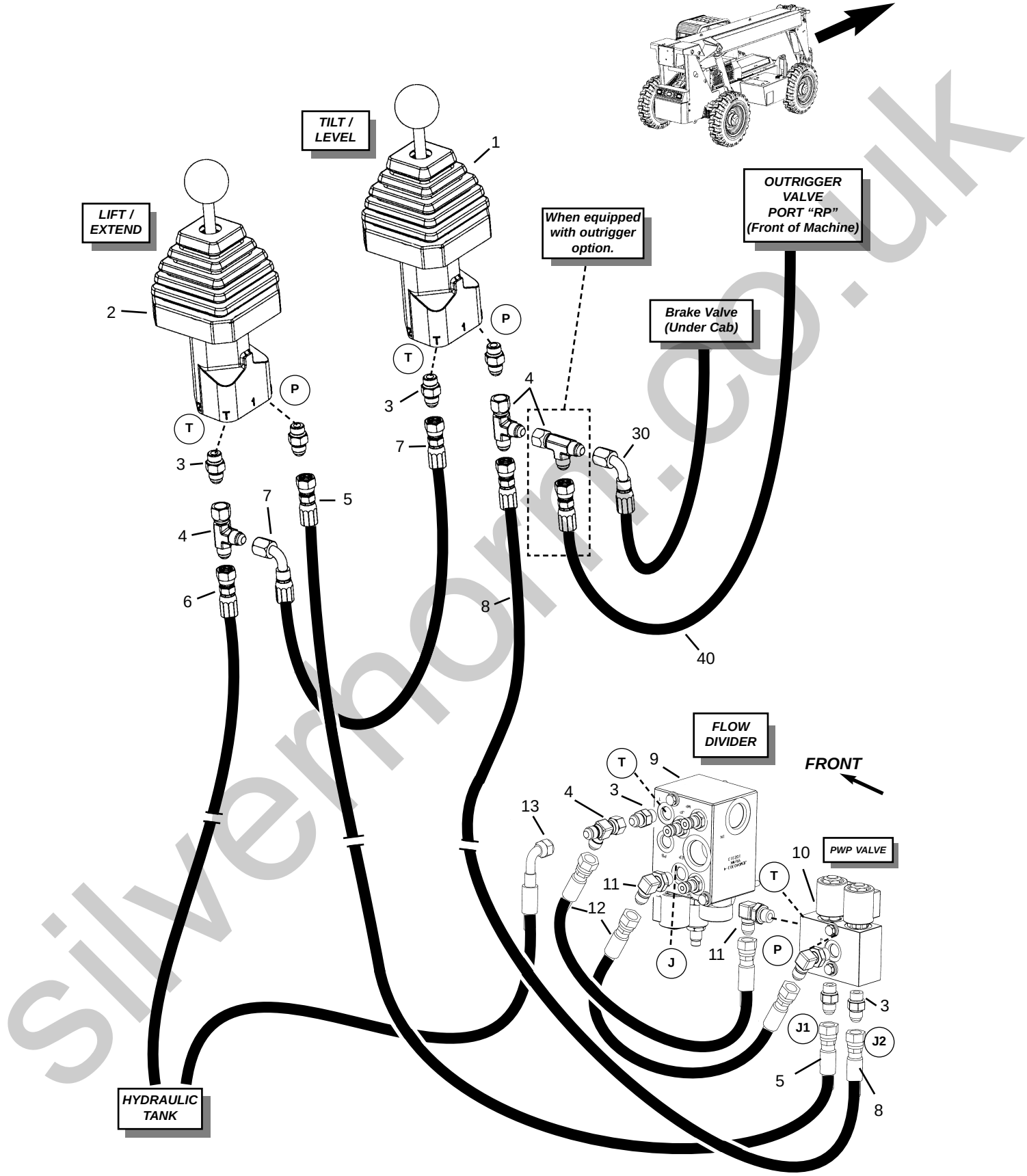

silvermore.co.uk

Ref. No.	Part No.	Description	Qty. Req.
01	808263	CONTROLLER, TILT/LEVEL	1
02	808139	CONTROLLER, LIFT/EXTEND	1
03	813596	ADAP., -6ORM -6JICM STR	AR
04	814461	ADAP., -6 SWIVEL RUN TEE	AR
05	808265	HOSE, -4 A6/A6 54”	1
06	808282	HOSE, -4 A6/DS6 35”	1
07	808882	HOSE, -4 A6/DS6 17”	1
08	808265	HOSE, -4 A6/A6 54”	1
09	808126	MANIFOLD, JOYSTICK RELIEF	1
10	808127	MANIFOLD, PWP JOYSTICK	1
11	813597	ADAP., -6ORM -6JICM 90º	2
12	808715	HOSE, -4 A6/A6 15”	2
13	808326	HOSE, -6AS/DS6 18”	1
30	808282	HOSE, -4 A6/DS6 35”	1
40[a]	808852	HOSE, -4 A6/A6 96”	1

a When equipped with outrigger option.

silverhorn.co.uk

Dual Controllers - PWP/Auxiliary Hydraulics

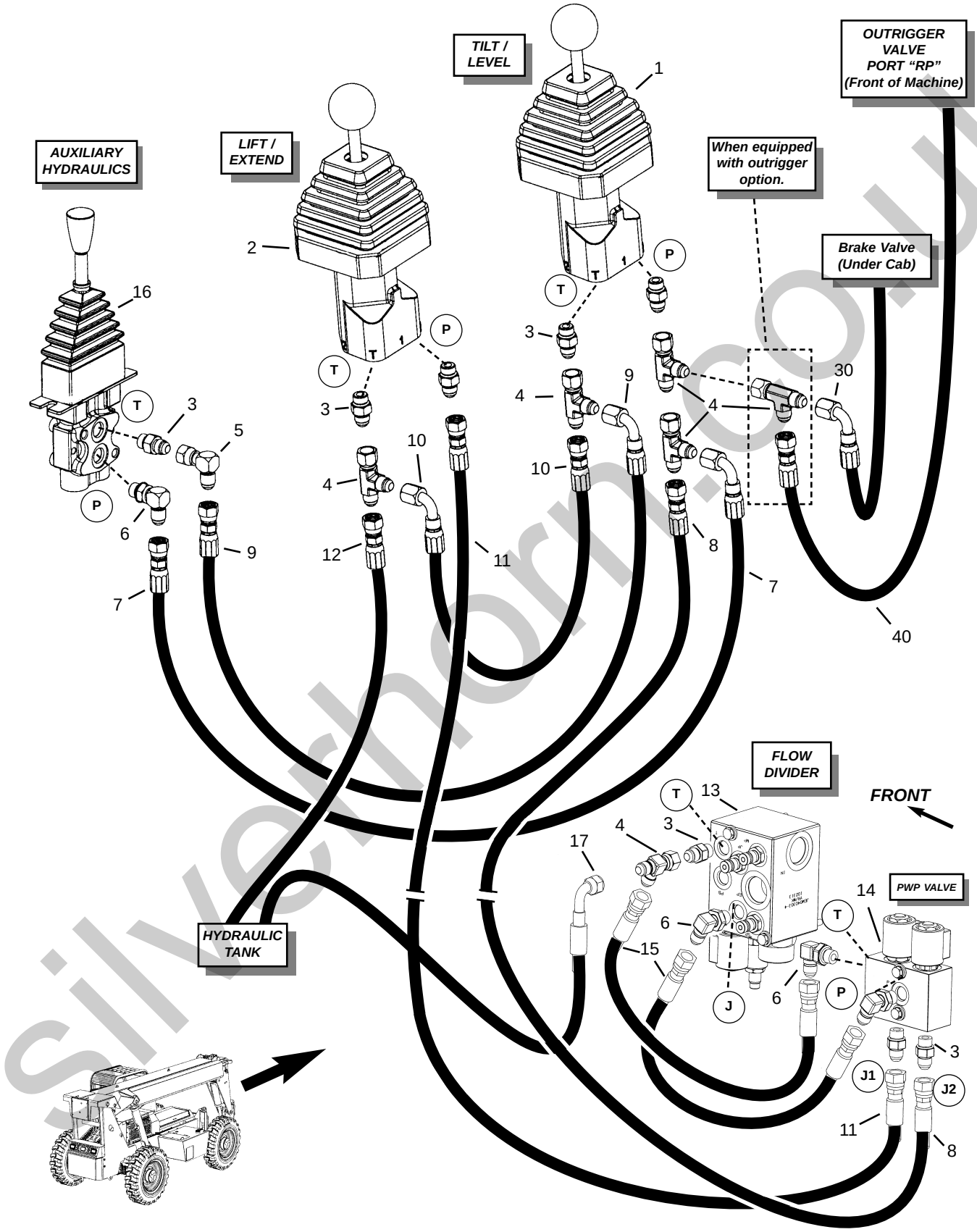

silverthorn.co.uk

Dual Controllers - PWP/Auxiliary Hydraulics

Ref. No.	Part No.	Description	Qty. Req.
01	808263	CONTROLLER, TILT/LEVEL	1
02	808139	CONTROLLER, LIFT/EXTEND	1
03	813596	ADAP., -6ORM -6JICM STR	AR
04	814461	ADAP., -6 SWIVEL RUN TEE	AR
05	814506	ADAP., -6JICM -6JICFS 90º	AR
06	813597	ADAP., -6ORM -6JICM 90º	AR
07	808850	HOSE, -4 A6/DS6 26”	1
08	808265	HOSE, -4 A6/A6 54”	1
09	808850	HOSE, -4 A6/DS6 26”	1
10	808882	HOSE, -4 A6/DS6 17”	1
11	808265	HOSE, -4 A6/A6 54”	1
12	808282	HOSE, -4 A6/DS6 35”	1
13	808126	MANIFOLD, JOYSTICK RELIEF	1
14	808127	MANIFOLD, PWP JOYSTICK	1
15	808715	HOSE, -4 A6/A6 15”	1
16	808139	CONTROLLER, AUX. HYD	1
17	808326	HOSE, -6 A6/DS6 18”	1
30	808282	HOSE, -4 A6/DS6 35”	1
40[a]	808852	HOSE, -4 A6/A6 96”	1

a When equipped with outrigger option.

silverhorn.co.uk

Dual Controllers - Radio Remote

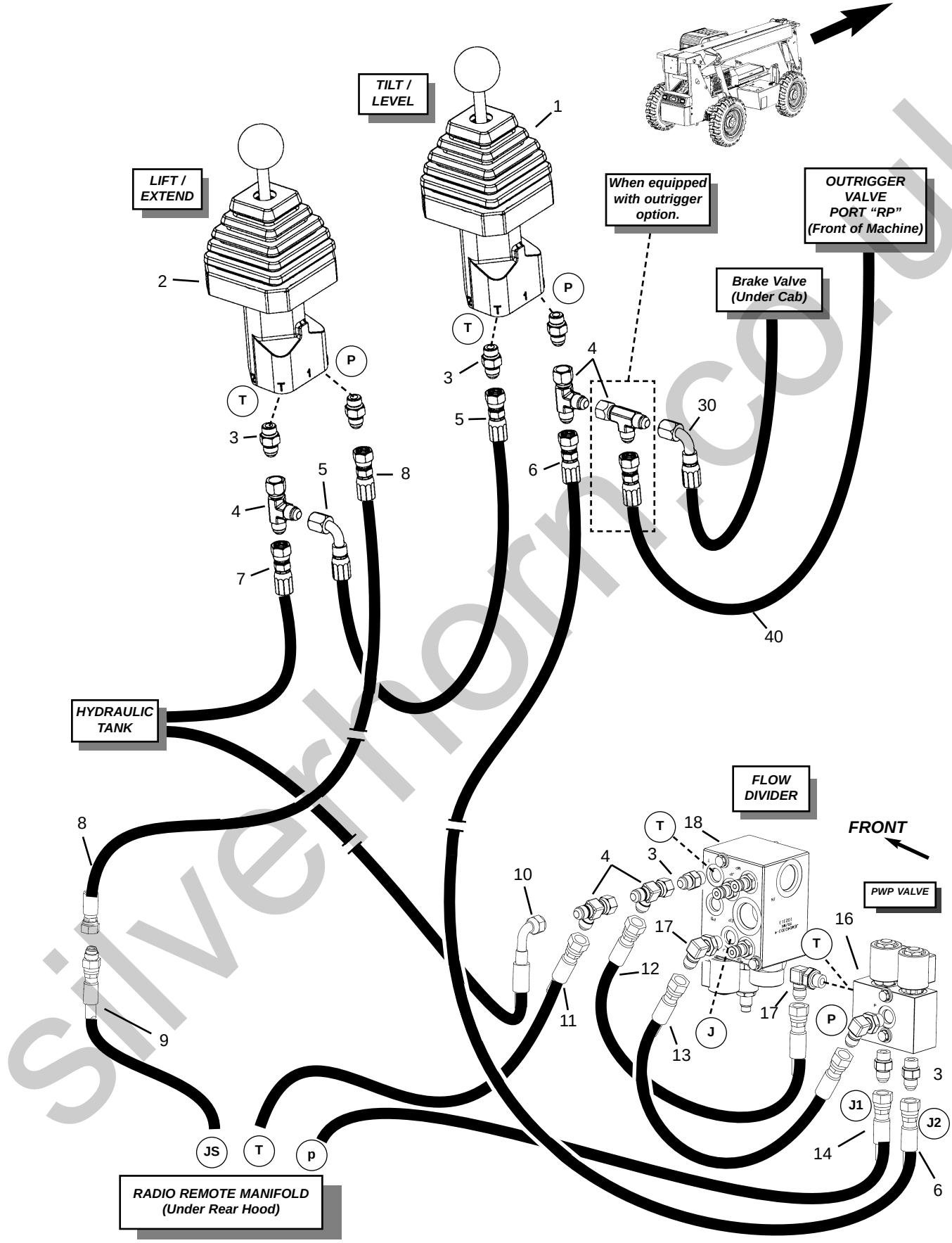

silverhorn.co.uk

Ref. No.	Part No.	Description	Qty. Req.
01	808263	CONTROLLER, TILT/LEVEL	1
02	808139	CONTROLLER, LIFT/EXTEND	1
03	813596	ADAP., -6ORM -6JICM STR	AR
04	814461	ADAP., -6 SWIVEL RUN TEE	AR
05	808882	HOSE, -4 A6/DS6 17”	1
06	808265	HOSE, -4 A6/A6 54”	1
07	808282	HOSE, -4 A6/D6 35”	1
08	808265	HOSE, -4 A6/A6 54”	1
09	809764	HOSE, -4 H6/A6 109”	1
10	808326	HOSE, -6 A6/DS6 18”	1
11	809766	HOSE, -6 A6/A6 130”	1
12	808715	HOSE, -4 A6/A6 15”	1
13	808715	HOSE, -4 A6/A6 15”	1
14	809773	HOSE, -6 A6/A6 110”	1
16	808127	MANIFOLD, PWP JOYSTICK	1
17	813597	ADAP., -6ORM -6JICM 90º	AR
18	808126	MANIFOLD, JOYSTICK RELIEF	1
30	808282	HOSE, -4 A6/DS6 35”	1
40[a]	808852	HOSE, -4 A6/A6 96”	1

a When equipped with outrigger option.

HOSE LOCATOR

09	CONNECTS TO LIFT/EXTEND “P” HOSE	RADIO REMOTE MANIFOLD “JS” PORT
11	TEE ON FLOW DIVER “T” PORT	RADIO REMOTE MANIFOLD “T” PORT
14	PWP/WPS VALVE “JI” PORT	RADIO REMOTE MANIFOLD “P” PORT

silverhorn.co.uk

Dual Controllers - Radio Remote - w/Auxiliary Hydraulics

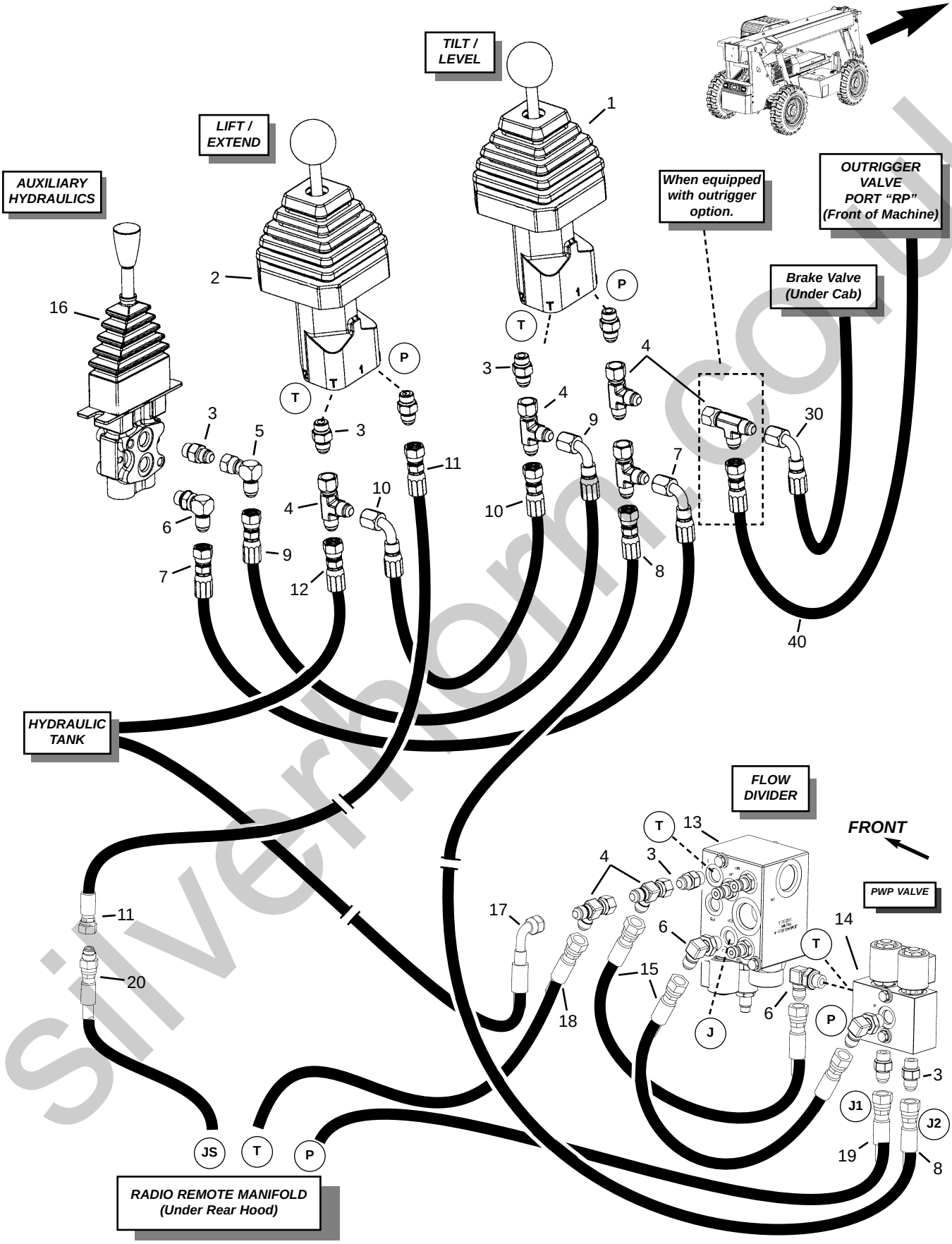

silverthorn.co.uk

Dual Controllers - Radio Remote - w/Auxiliary Hydraulics

Ref. No.	Part No.	Description	Qty. Req.
01	808263	CONTROLLER, TILT/LEVEL	1
02	808139	CONTROLLER, LIFT/EXTEND	1
03	813596	ADAP., -6ORM -6JICM STR	AR
04	814461	ADAP., -6 SWIVEL RUN TEE	AR
05	814506	ADAP., -6JICM -6JICFS 90º	AR
06	813597	ADAP., -6ORM -6JICM 90º	AR
07	808850	HOSE, -4 A6/DS6 26”	1
08	808265	HOSE, -4 A6/A6 54”	1
09	808850	HOSE, -4 A6/DS6 26”	1
10	808882	HOSE, -4 A6/DS6 17”	1
11	808265	HOSE, -4 A6/A6 54”	1
12	808282	HOSE, -4 A6/DS6 35”	1
13	808126	MANIFOLD, JOYSTICK RELIEF	1
14	808127	MANIFOLD, PWP JOYSTICK	1
15	808715	HOSE, -4 A6/A6 15”	1
16	808139	CONTROLLER, AUX. HYD	1
17	808326	HOSE, -6 A6/DS6 18”	1
18	809766	HOSE, -6 A6/A6 130”	1
19	809773	HOSE, -6 A6/A6 110”	1
20	809764	HOSE, -4 H6/A6 109”	1
30	808282	HOSE, -4 A6/DS6 35”	1
40[a]	808852	HOSE, -4 A6/A6 96”	1

a When equipped with outrigger option.

HOSE LOCATOR

18	TEE ON FLOW DIVER “T” PORT	RADIO REMOTE MANIFOLD “T” PORT
19	PWP/WPS VALVE “JI” PORT	RADIO REMOTE MANIFOLD “P” PORT
20	CONNECTS TO LIFT/EXTEND “P” HOSE	RADIO REMOTE MANIFOLD “JS” PORT

silverhorn.co.uk

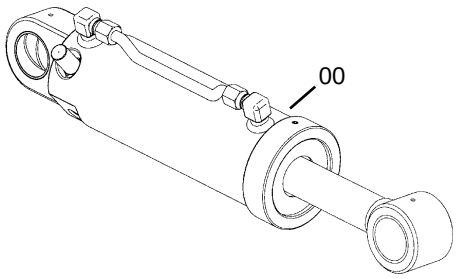

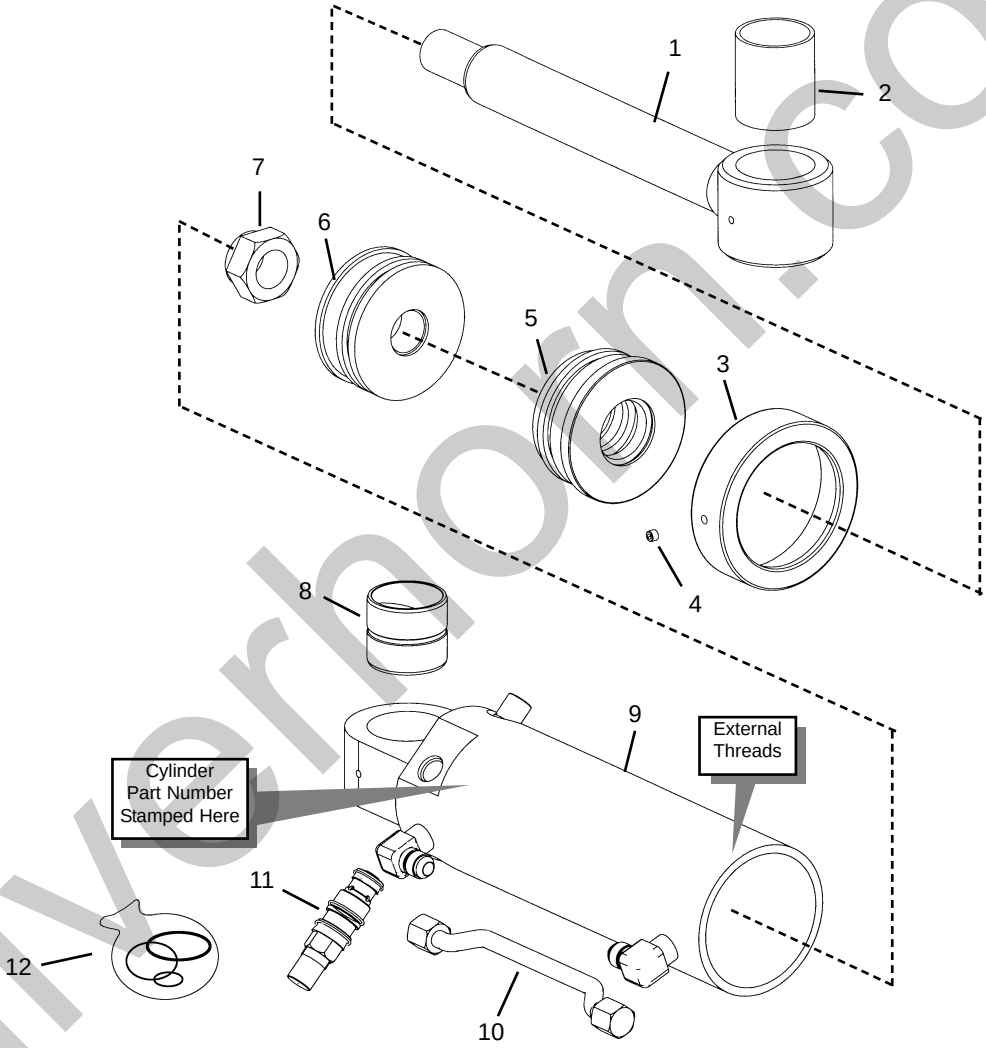

silverhorn.co.uk

Ref. No.	Part No.	Description	Qty. Req.
00	808304	FRAME LEVEL CYLINDER	1
01	809059	ROD *(includes item #2)*	1
02	808708	BUSHING	1
03	809067	HEAD GLAND CAP	1
04	809136	5/16”-18x1/4” SET SCREW	1
05	809061	HEAD GLAND	1
06	809068	PISTON	1
07	809128	1-1/4”-12 UNF LOCKNUT	1
08	808756	BUSHING 2.0X2.25X2.0”	1
09	NSS	TUBE WELDMENT	1
10	809062	OIL LINE TUBE ASSEMBLY	1
11	809267	COUNTER BALANCE VALVE	2
	51200416	SEAL KIT (CBV)	1
12[a]	809060	CYLINDER SEAL KIT	1

a *Items included with seal kit are not shown.*

silverhorn.co.uk

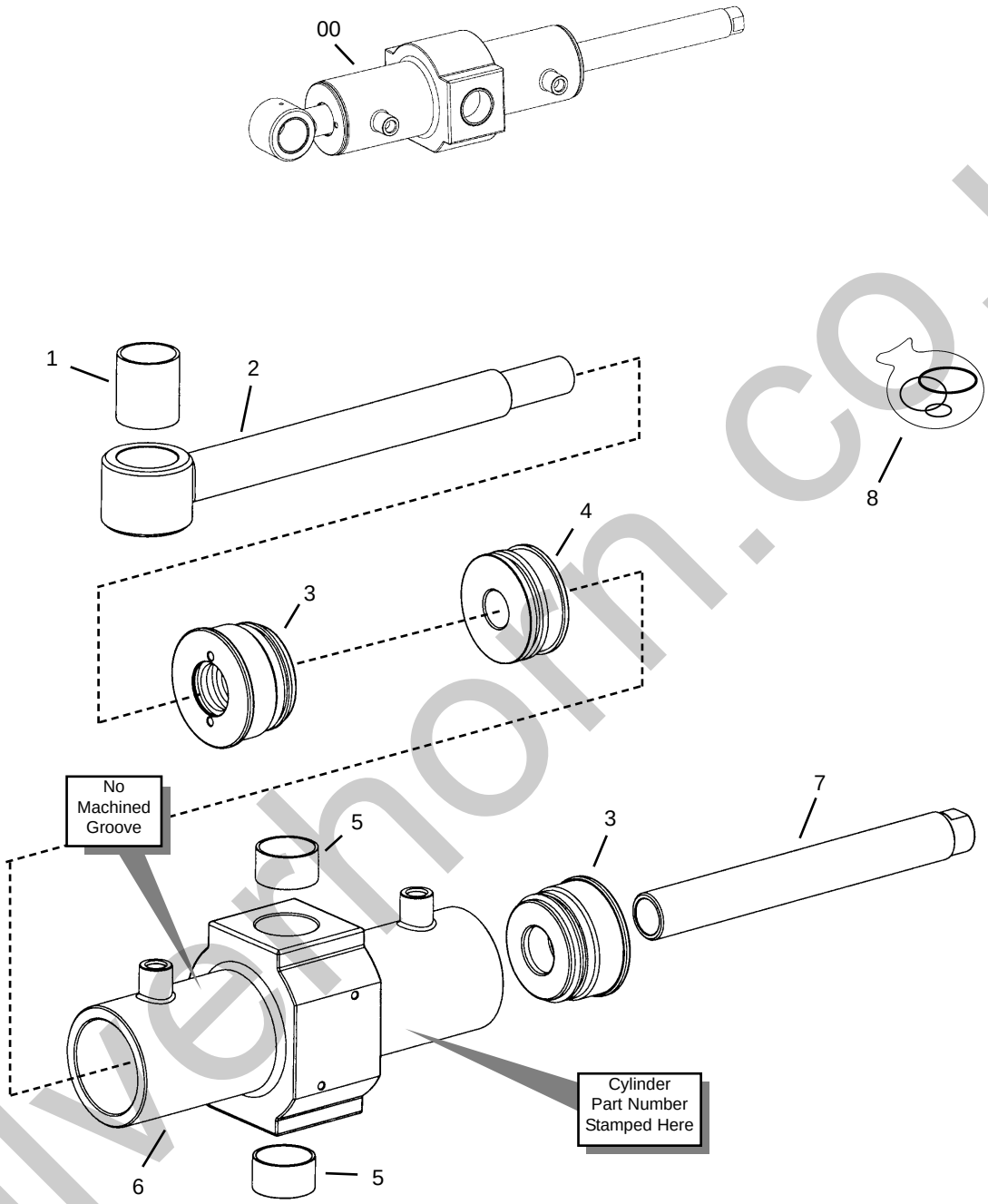

silverthorn.co.uk

Ref. No.	Part No.	Description	Qty. Req.
00	808117	STABILIZING CYLINDER	1
01	808858	BUSHING	1
02	808346	ROD WELDMENT *(includes item #1)*	1
03	809159	HEAD GLAND	2
04	809160	PISTON	1
05	808878	BUSHING	2
06	NSS	TUBE WELDMENT	1
07	814584	CYLINDER ROD	1
08[a]	809161	SEAL KIT	1

a Items included with seal kit are not shown.

silverhorn.co.uk

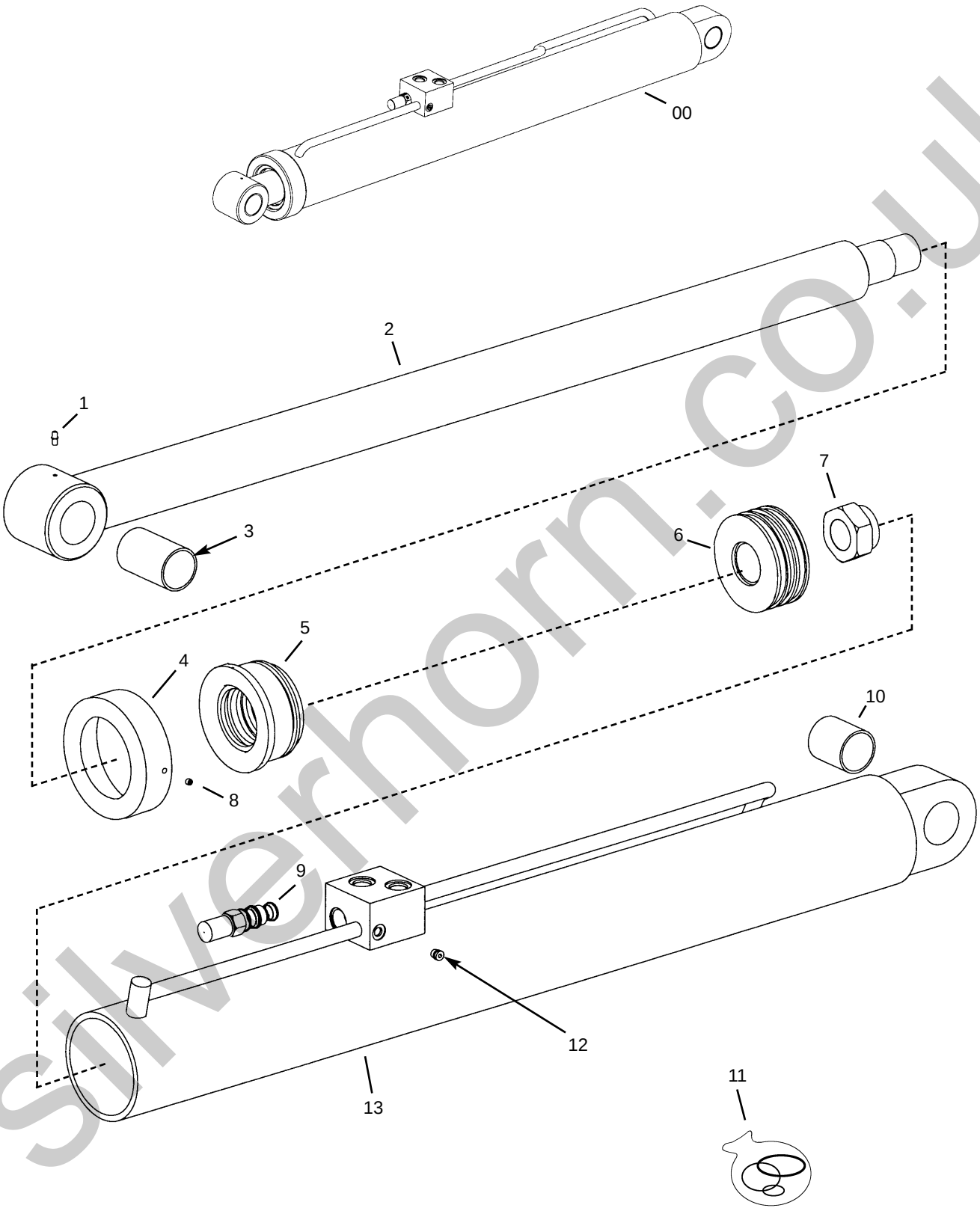

silverhorn.co.uk

Ref. No.	Part No.	Description	Qty. Req.
00	814290	BOOM LIFT CYLINDER	1
01	808424	1/4”-28 GREASE ZERK	1
02	814586	ROD WELDMENT	1
03	814296	BUSHING (ROD END)	1
04	809135	HEAD GLAND CAP	
05	814586	HEAD GLAND	1
06	814593	PISTON	1
07	809140	1-3/4”-12 UNF LOCKNUT	1
08	809136	5/16”-18X1/4” SET SCREW	1
09	808907	CBAL VALVE	1
	808955	CB VALVE SEAL KIT	1
10	808858	BUSHING (BASE END)	1
11[a]	814591	CYLINDER SEAL KIT	1
12	809155	PLUG -4	1
13	NSS	CYLINDER TUBE WELDMENT	1

a *Items included in the seal kit are not shown.*

silverhorn.co.uk

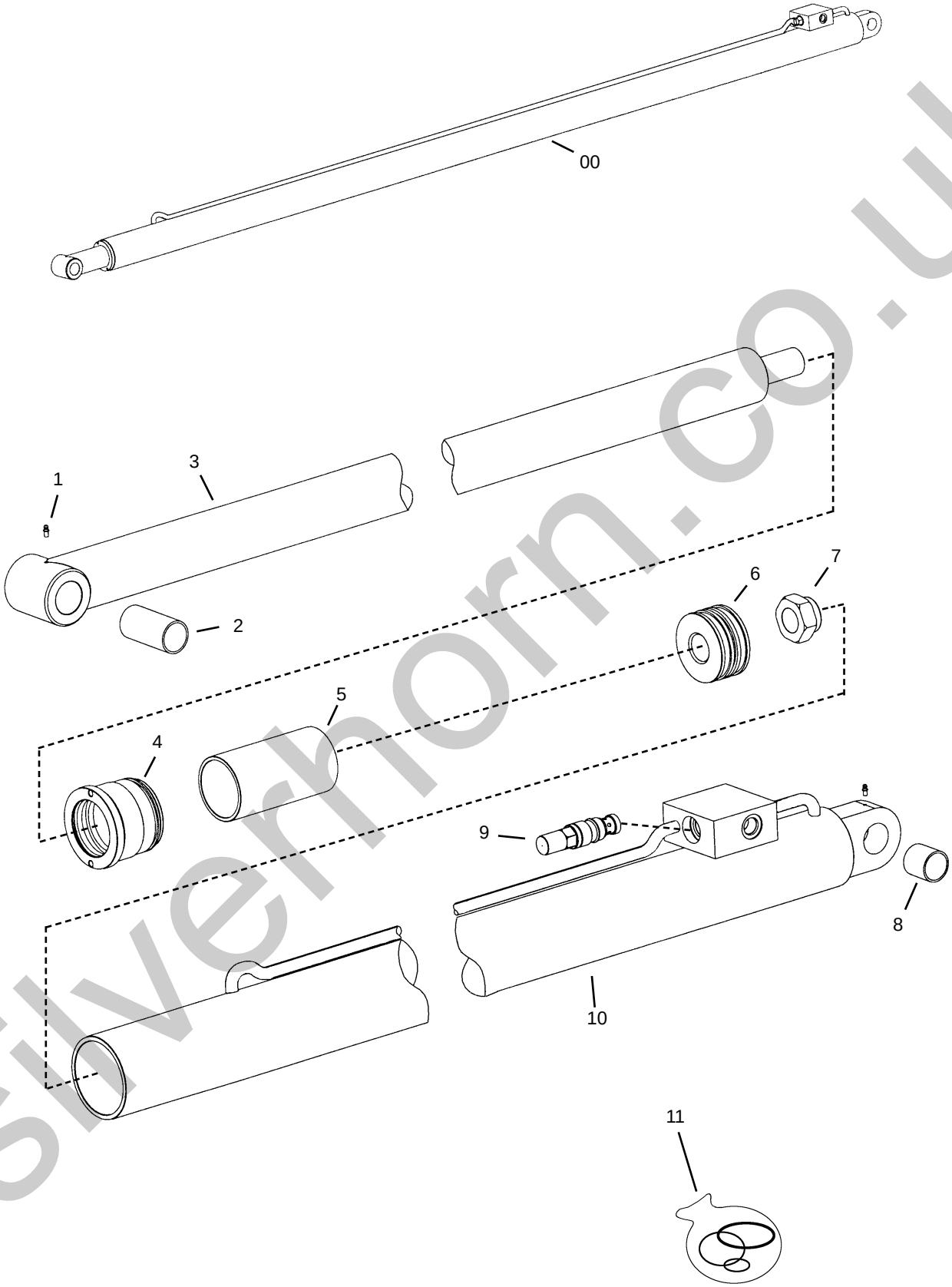

silverhorn.co.uk

Ref. No.	Part No.	Description	Qty. Req.
00	814409	BOOM EXTEND CYLINDER	1
01	808424	1/4”-28 GREASE ZERK	2
02	814608	BUSHING *(rod end)*	1
03	814610	ROD WELDMENT	1
04	814611	HEAD GLAND	1
05	814613	ROD SPACER	1
06	814614	PISTON	1
07	809140	1-3/4”-12 UNF LOCKNUT	1
08	814615	BUSHING *(base end)*	1
09	808903	COUNTER BALANCE VALVE	1
	809162	CBAL VALVE SEAL KIT	1
10	NSS	CYLINDER TUBE WELDMENT	1
11[a]	814616	CYLINDER SEAL KIT	1

a *Items included in the seal kit are not shown.*

silverhorn.co.uk

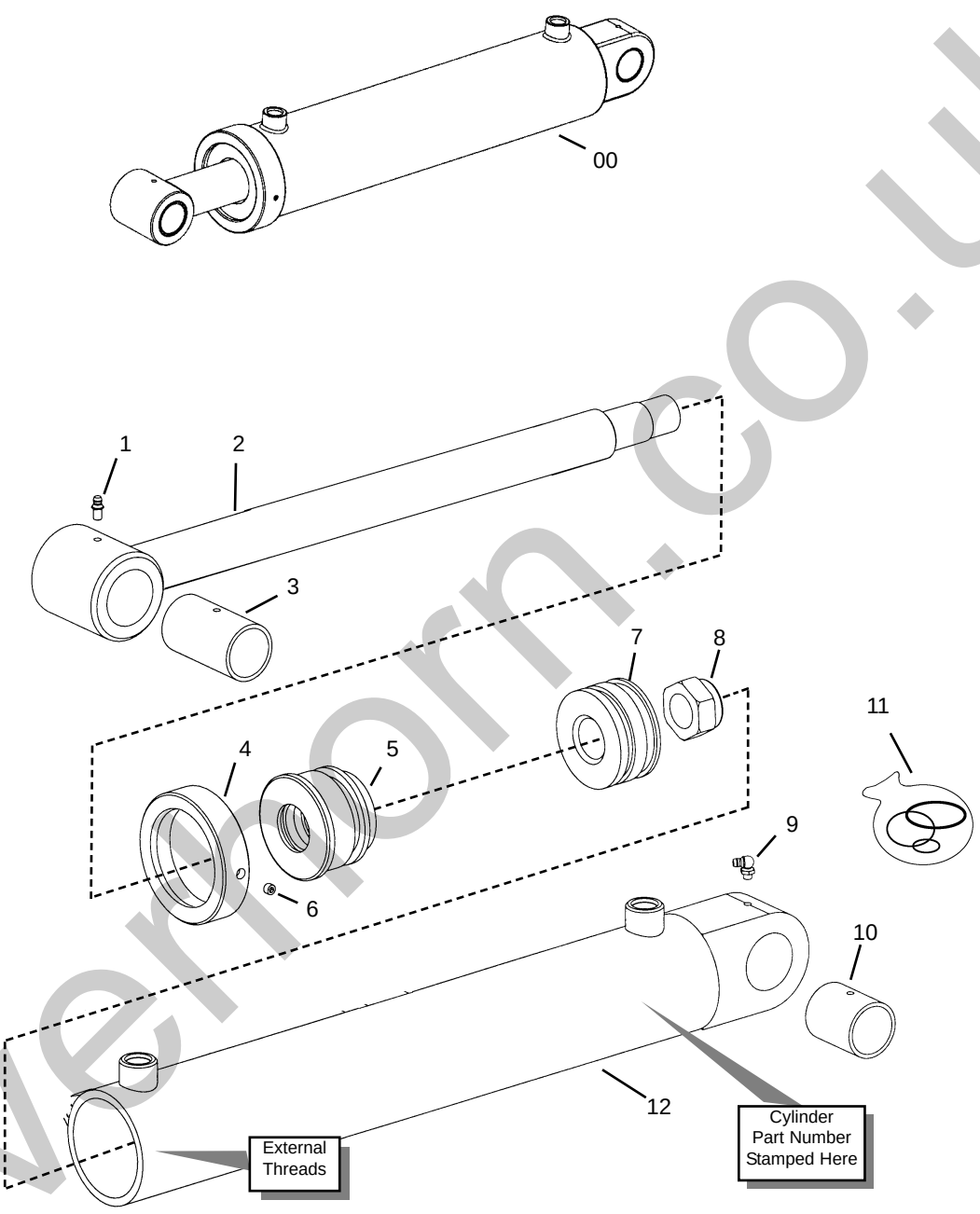

silvermorn.co.uk

Slave

Ref. No.	Part No.	Description	Qty. Req.
00	808860	SLAVE CYLINDER	1
01	808424	1/4”-28 GREASE ZERK STR	1
02	809138	ROD WELDMENT *(includes item #2)*	1
03	808709	BUSHING (ROD END)	1
04	809067	HEAD GLAND CAP	1
05	809139	HEAD GLAND	1
06	809136	5/16”-18X1/4” SET SCREW	1
07	809137	PISTON	1
08	814598	1-3/8”-12 UNF LOCKNUT	1
09	808423	1/4”-28 GREASE ZERK 90º	1
10	808831	BUSHING (BASE END)	1
11[a]	809140	CYLINDER SEAL KIT	1
12	NSS	CYLINDER TUBE WELDMENT	1

a *Items included in the seal kit are not shown.*

silverhorn.co.uk

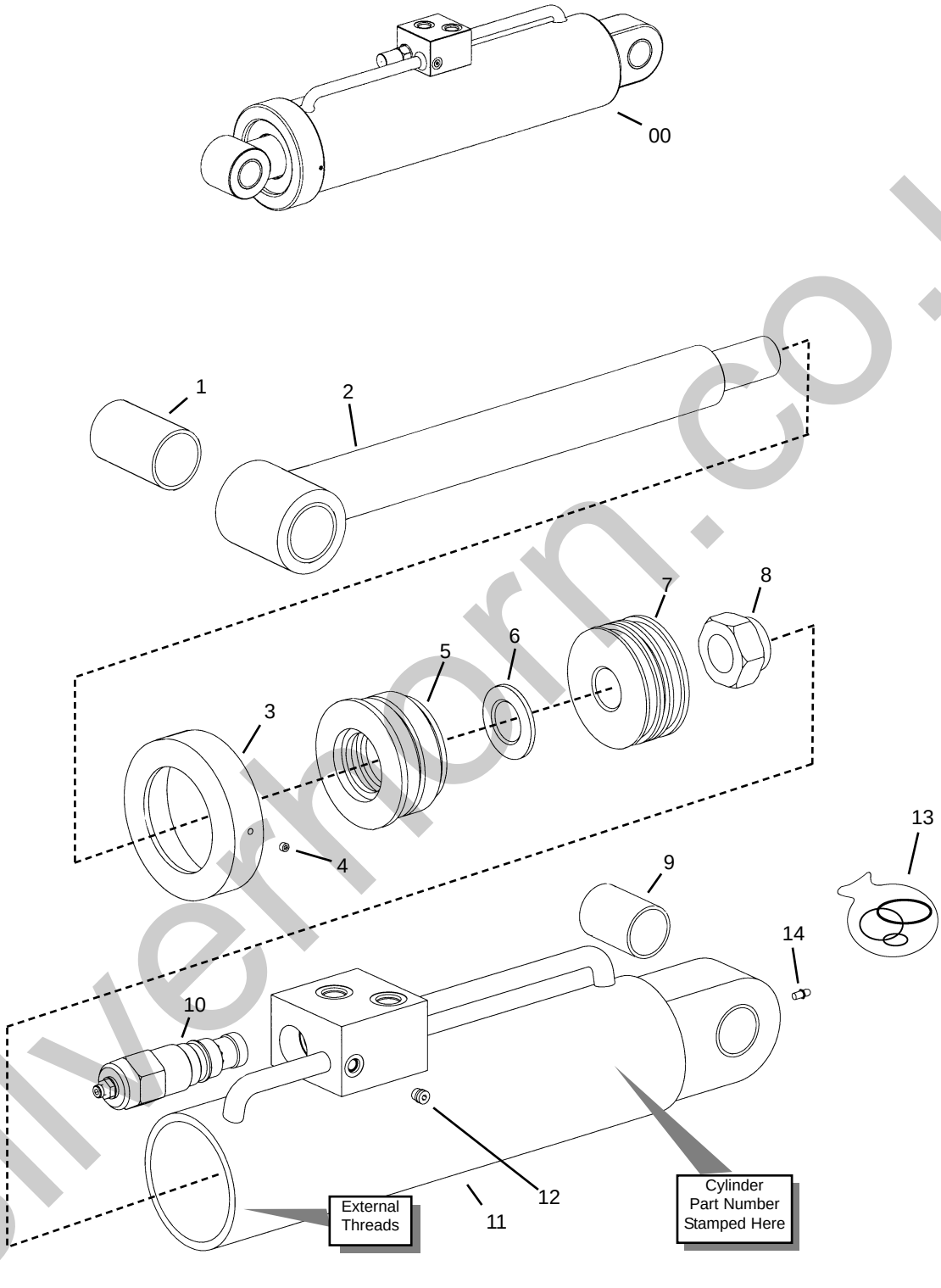

silverthorn.co.uk

Ref. No.	Part No.	Description	Qty. Req.
00	808859	TILT CYLINDER	1
01	809150	BUSHING	1
02	809148	ROD WELDMENT *(includes item #1)*	1
03	809135	HEAD GLAND CAP	1
04	814603	5/16”-18X5/16” SET SCREW	1
05	809149	HEAD GLAND	1
06	809134	THRUST WASHER	1
07	809147	PISTON	1
08	809140	1-3/4” UNF LOCKNUT	1
09	808857	BUSHING *(base end)*	1
10	808907	COUNTER BALANCE VALVE	1
	808955	CB VALVE SEAL KIT	1
11	NSS	CYLINDER TUBE WELDMENT	1
12	809155	PLUG -4	1
13[a]	809146	CYLINDER SEAL KIT	1
14	808424	1/4”-28 GREASE ZERK STR	1

a *Items included in the seal kit are not shown.*

silverhorn.co.uk

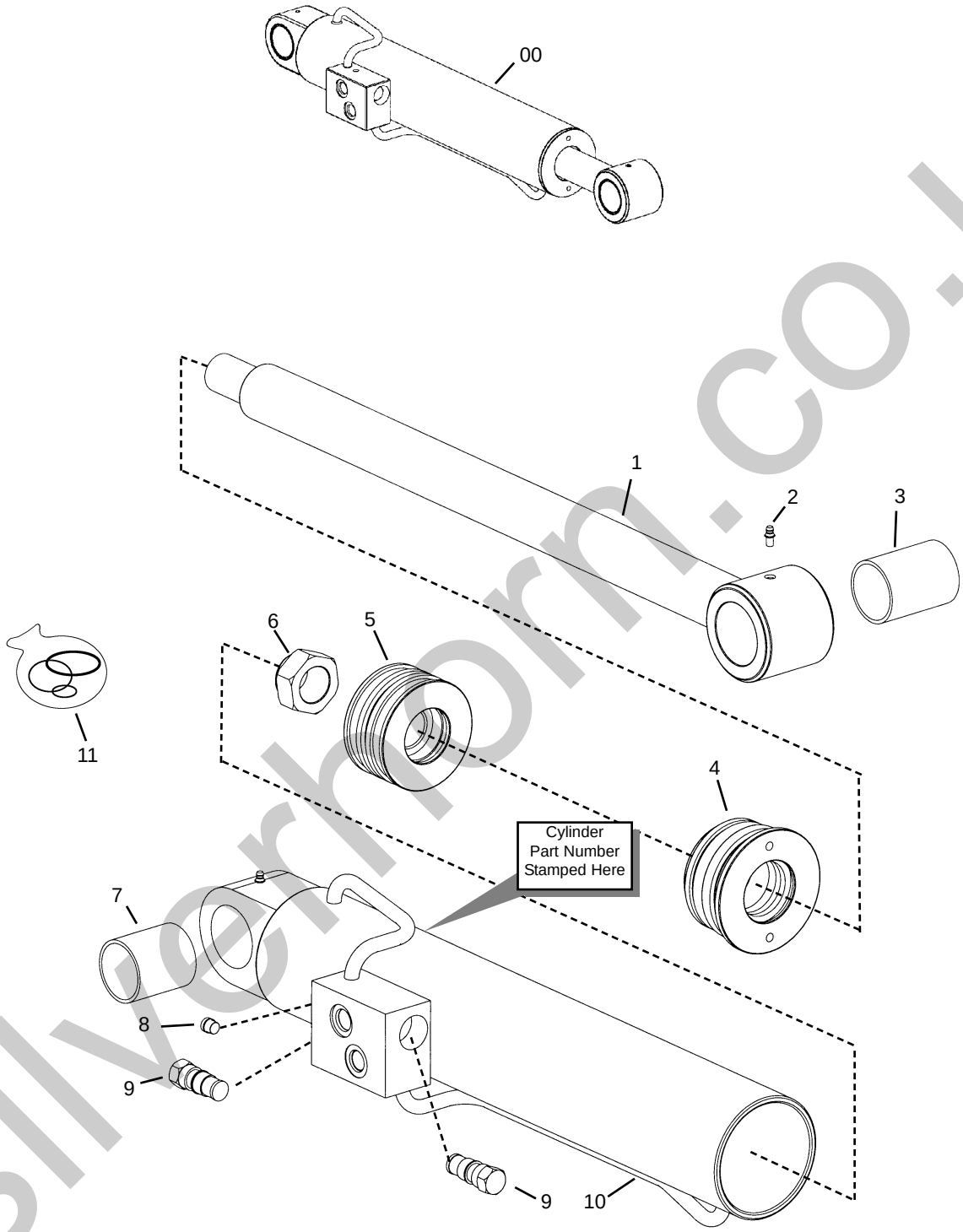

silverhorn.co.uk

Ref. No.	Part No.	Description	Qty. Req.
00	808910	OUTRIGGER CYLINDER	1
01	809168	ROD WELDMENT *(includes item 3)*	1
02	808424	1/4”-28 GREASE ZERK	2
03	808911	BUSHING (ROD END)	1
04	809169	HEAD GLAND	1
05	809137	PISTON	1
06	814598	1-3/8”-12 UNF LOCKNUT	1
07	808858	BUSHING (BASE END)	1
08	809155	PLUG, -40RM	1
09	809166	PO CHECK VALVE	2
10	NSS	CYLINDER TUBE WELDMENT	1
11[a]	809167	CYLINDER SEAL KIT	1

a Items included in the seal kit are not shown.

silverhorn.co.uk

Rotating-Carriage

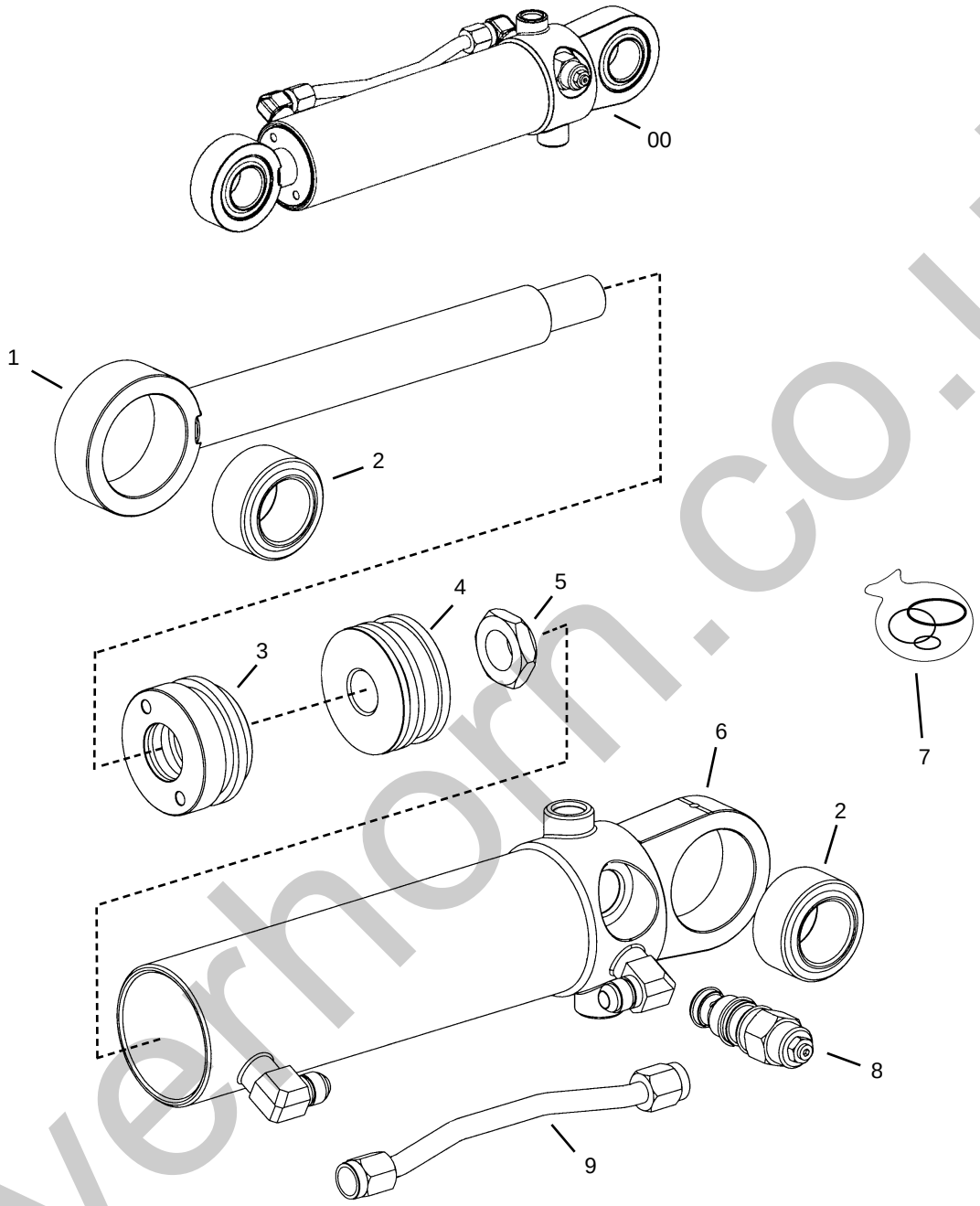

Ref. No.	Part No.	Description	Qty. Req.
00	808918	ROTATING-CARRIAGE CYL.	1
01	808502	ROD WELDMENT	1
02	808743	SPHERICAL BEARING	2
03	809101	HEAD GLAND	1
04	808961	PISTON	1
05	808070	1”-14 UNS THIN COL. LOCKNUT	1
06	NSS	TUBE WELDMENT	1
07[a]	808960	SEAL KIT	1
08	808476	CB VALVE (3000 psi)	2
	808955	CB VALVE SEAL KIT	1
09	808501	HYDRAULIC LINE ASSEMBLY	1

a *Items included in the seal kit are not shown.*

silverhorn.co.uk

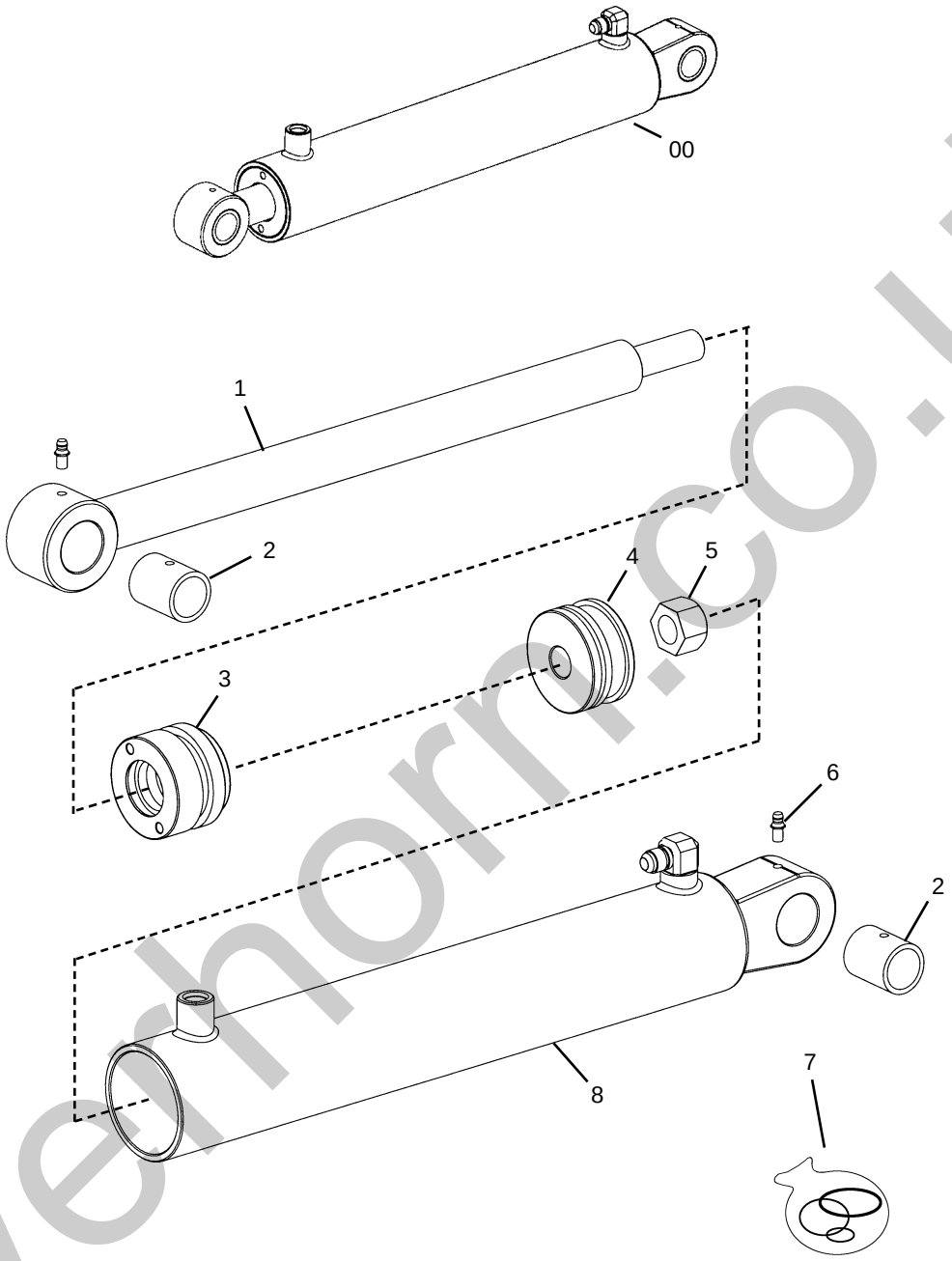

Ref. No.	Part No.	Description	Qty. Req.
00	808738	SWING-CARRIAGE CYLINDER	1
01	809269	ROD WELDMENT	1
02	808720	BUSHING	2
03	809270	HEAD GLAND	1
04	809371	PISTON	1
05	808071	3/4”-16 LOCKNUT	1
06	808424	1/4”-28 GREASE ZERK	2
07[a]	809163	SEAL KIT	1
08	NSS	TUBE WELDMENT	1

a *Items included in the seal kit are not shown.*

silverhorn.co.uk

Fork-Shift

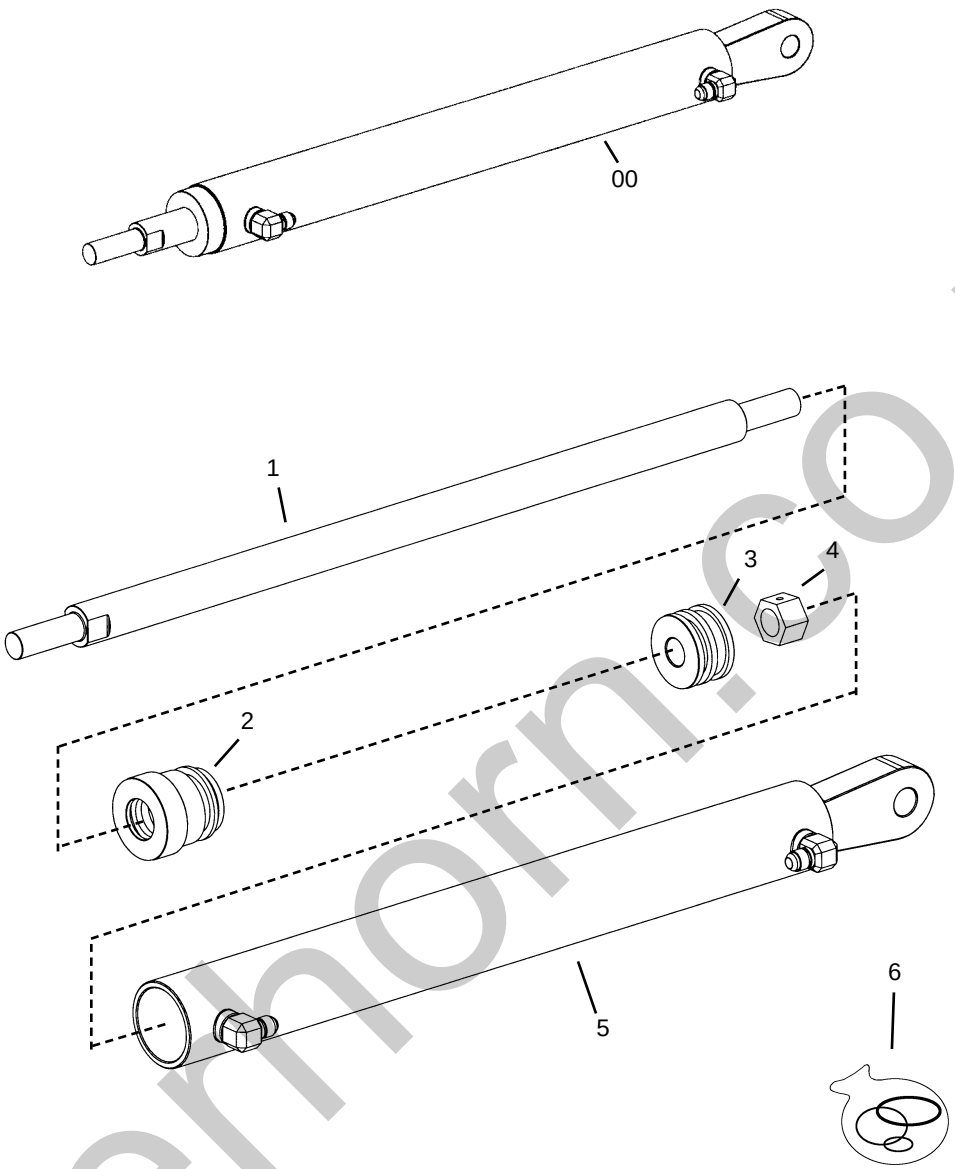

Ref. No.	Part No.	Description	Qty. Req.
00	808834	FORK-SHIFT CYLINDER	1
01	808581	ROD WELDMENT	1
02	808580	HEAD GLAND	1
03	808579	PISTON	1
04	808071	3/4”-16 UNF LOCKNUT	1
05	NSS	TUBE WELDMENT	1
06[a]	808506	SEAL KIT	1

a *Items included in the seal kit are not shown.*

silverhorn.co.uk

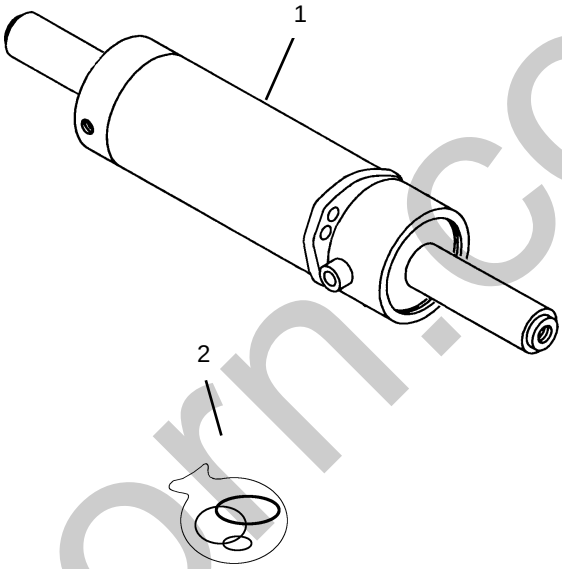

Ref. No.	Part No.	Description	Qty. Req.
01	51200278	STEER CYLINDER	1
02	51200283	SEAL KIT (*Items included are not shown.*)	1

NOTE: *Quantities are per axle.*

NOTE: *Refer to Axle Section for more information.*

silverhorn.co.uk

Hydraulic Pump

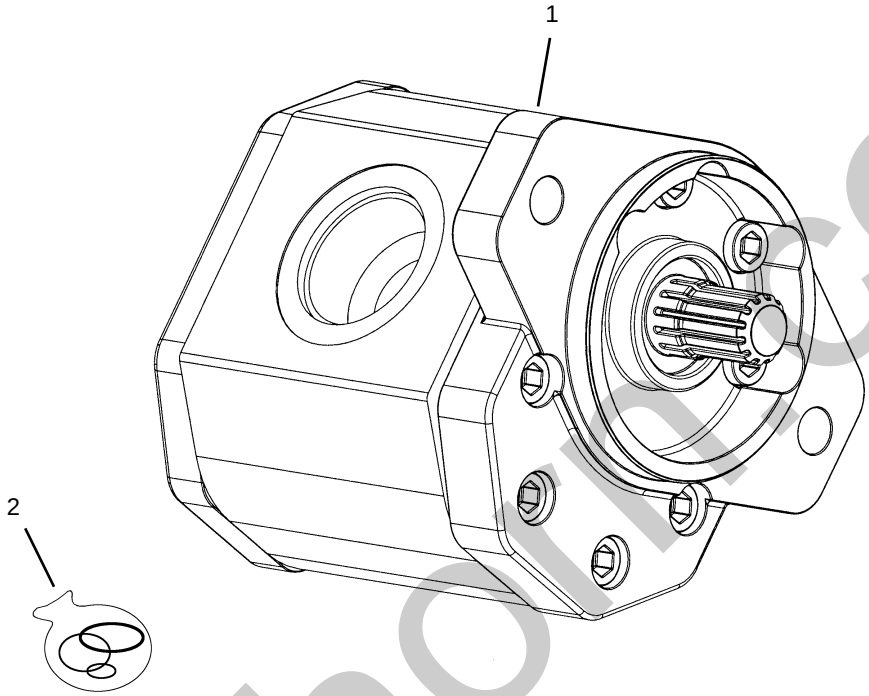

Ref. No.	Part No.	Description	Qty. Req.
01	808146	HYDRAULIC PUMP	1
	808469	GASKET, PUMP *(between pump and transmission)*	1

Ref. No.	Part No.	Description	Qty. Req.
02[a]	808350	SEAL KIT	1

a *Individual seals are not shown.*

NOTE: Field service is limited to replacement of seals.

silverhorn.co.uk

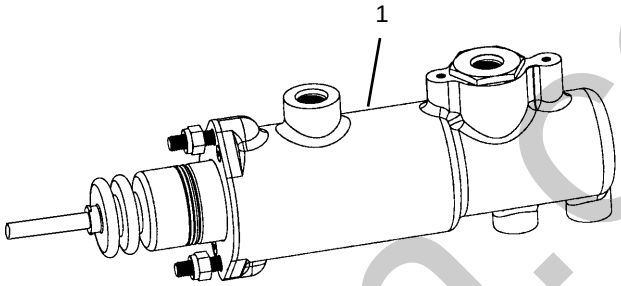

Ref. No.	Part No.	Description	Qty. Req.
01	51200086	BRAKE CYLINDER, BOOSTER . . .	1

silverhorn.co.uk

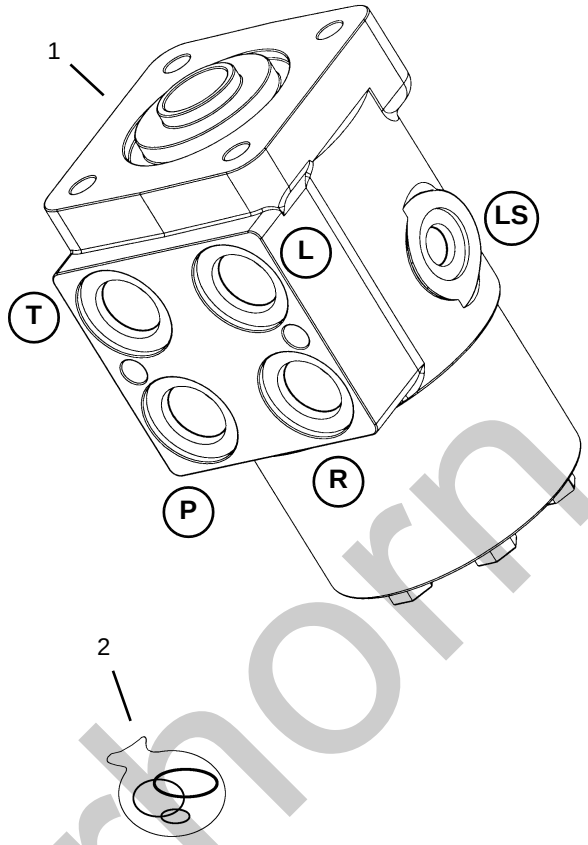

Ref. No.	Part No.	Description	Qty. Req.
01	808101	STEERING CONTROL UNIT	1
02	808585	SEAL KIT *(Items included are not shown.)*	1

NOTE: *Field service is limited to replacement of seals*.

silverthorn.co.uk

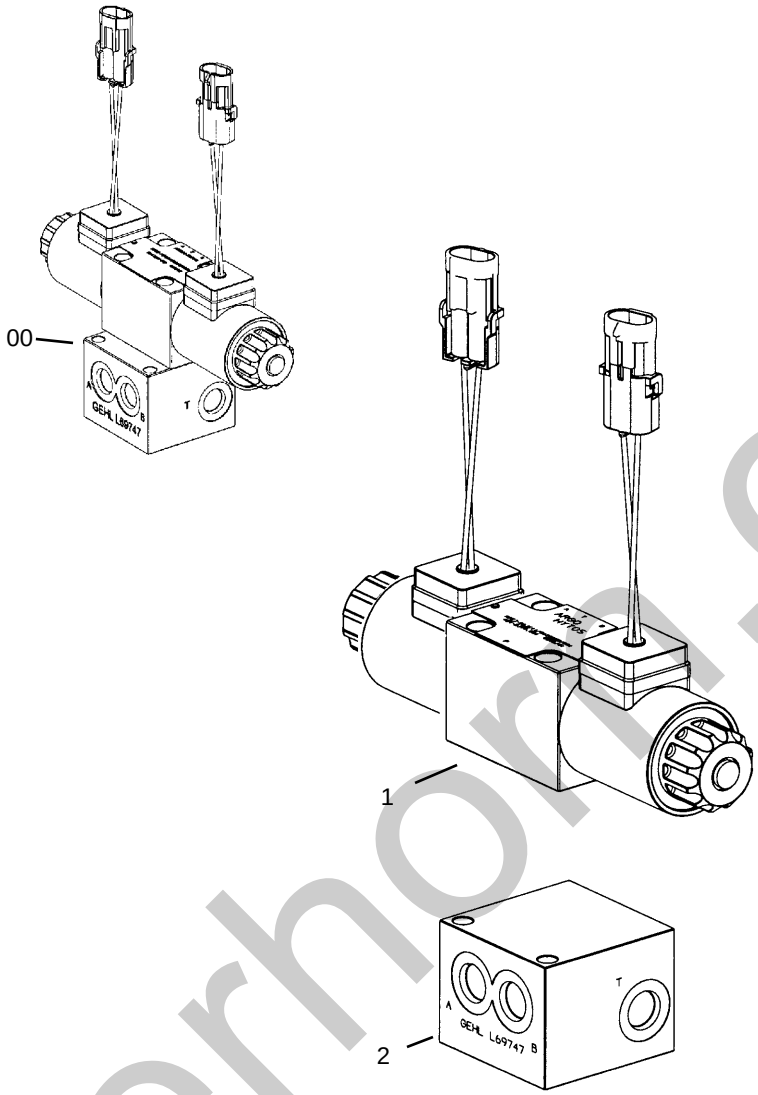

Ref. No.	Part No.	Description	Qty. Req.
00	808877	STEER SELECT VALVE . . . . . 1 *(includes items 1 and 2)*	
01	814532	WEATHER PAK VALVE. 1	
02	NSS	MANIFOLD 1	

Ref. No.	Part No.	Description	Qty. Req.
		-- ITEMS NOT SHOWN --	
--	809272	WIRE HARNESS . . . . . 2 *(connects wire leads to frame wiring)*	

silverhorn.co.uk

Priority Flow Divider Valve

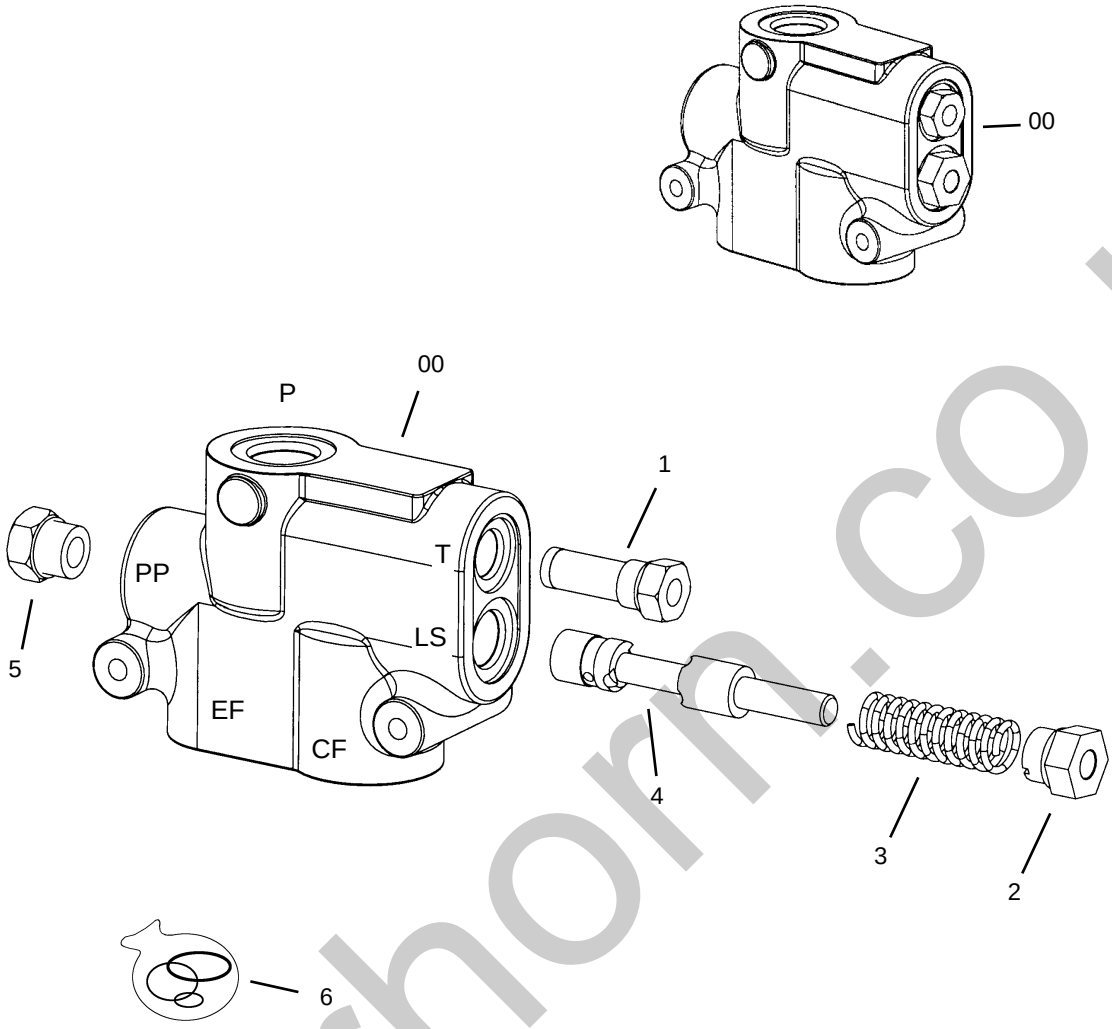

Ref. No.	Part No.	Description	Qty. Req.
00	51200414	PRIORITY FLOW DIVIDER	1
		(includes all items shown)	
01	51200419	RELIEF CARTRIDGE ASY.	1
02	NSS	PLUG ASY	1
03	NSS	SPRING	1
04	NSS	SPOOL	1
05	NSS	PLUG	1
06[a]	808959	SEAL KIT	1

a *Items in seal kit are not shown.*

silverhorn.co.uk

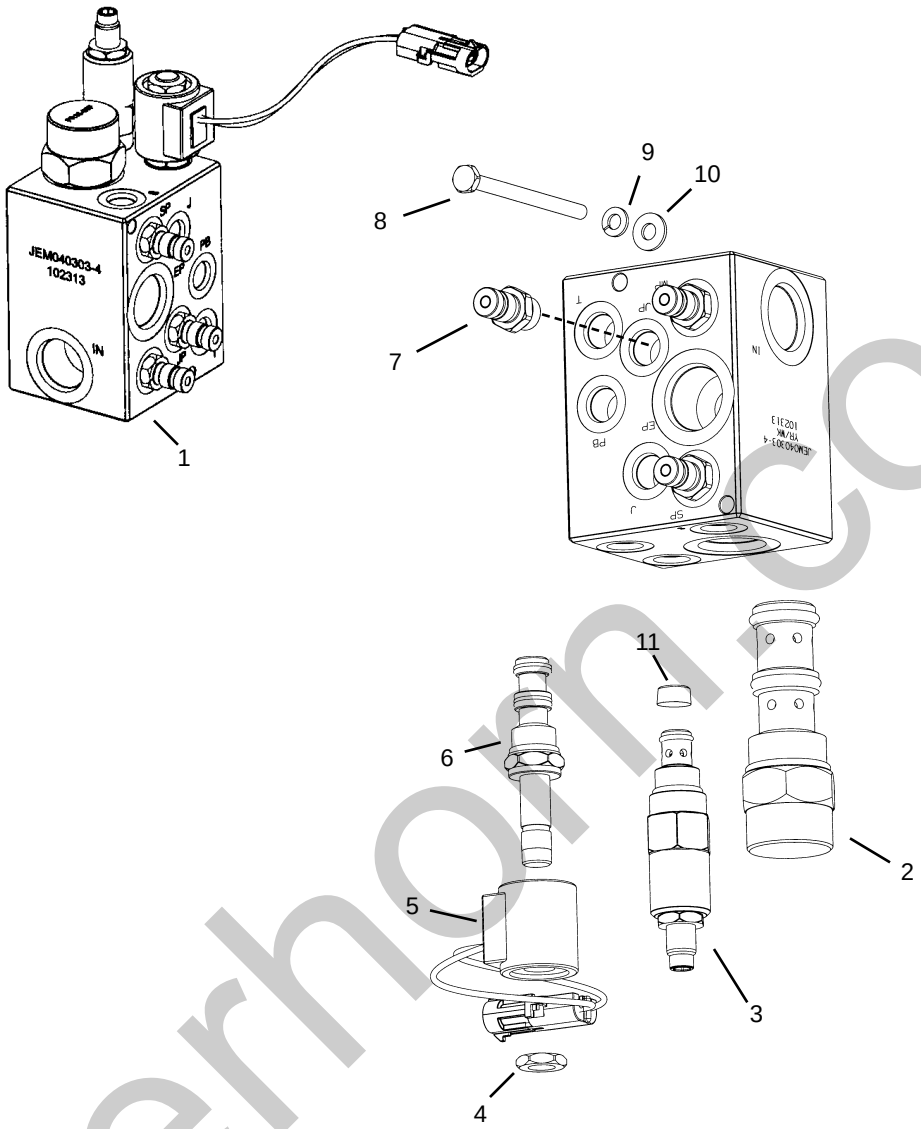

Ref. No.	Part No.	Description	Qty. Req.
01	808126	MANIFOLD, FLOW DIVIDER	1
		(includes items 1-7)	
02	808349	PILOTED SPOOL LOGIC ELEM.	1
03	809157	RELIEF VALVE	1
	809156	SEAL KIT	1
04	NSS	NUT, SOLENOID VALVE	1
		(included with item 5)	
05	809151	12 VDC WEATHER PACK COIL	1
		(includes item 4)	
06	809152	SOLENOID VALVE	1
	809153	SEAL KIT	1
07	809174	TEST PORT	3
	808704	CAP, DUST COVER *(not shown)*	3
	51200420	FEMALE COUPLER *(optional)*	
08	809273	1/4”-20X3-1/2” BOLT	2
09	808589	1/4” LOCK WASHER	2
10	808588	1/4” FLAT WASHER	2
11	51200421	SCREEN	1

NOTE: *Items included in seal kits are not shown.*

silverhorn.co.uk

PWP Manifold

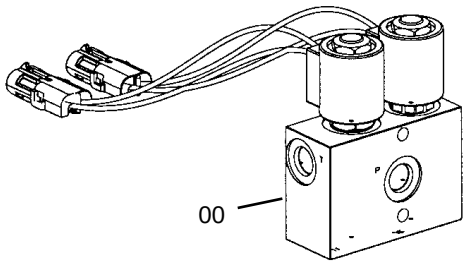

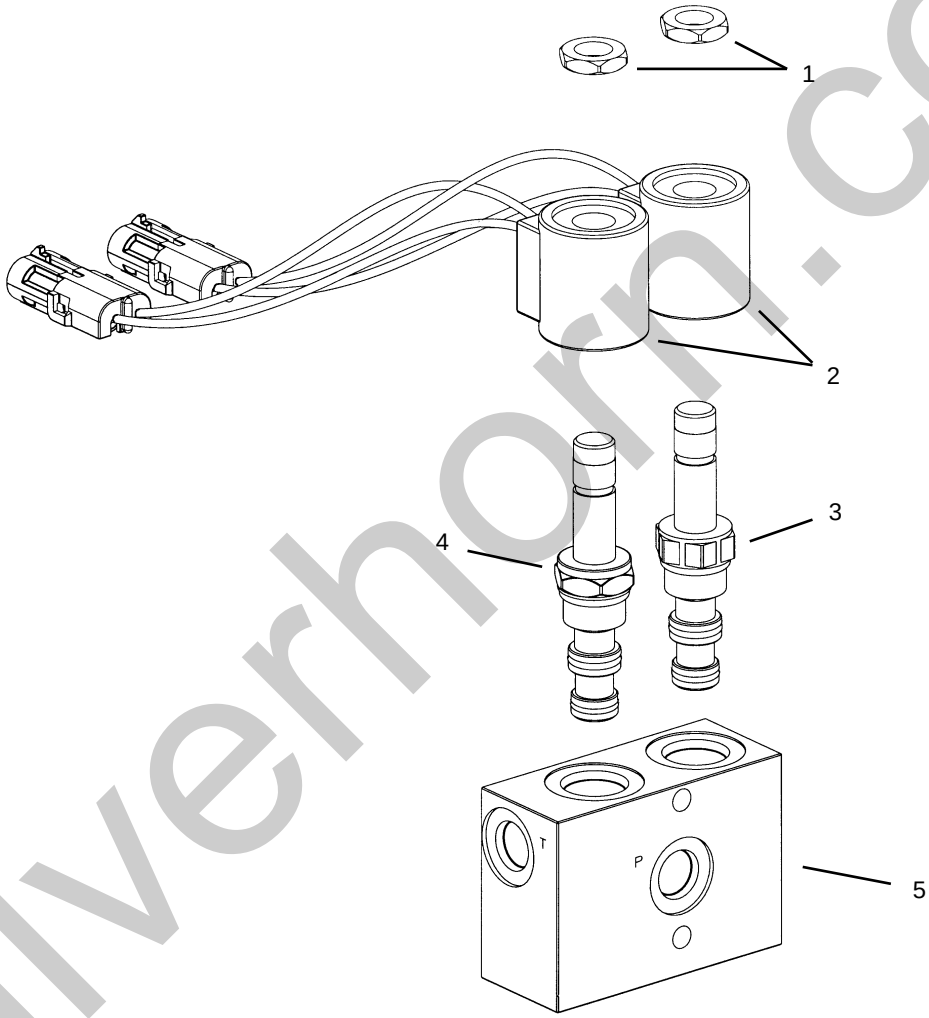

silverhorn.co.uk

PWP Manifold

Ref. No.	Part No.	Description	Qty. Req.
00	808127	MANIFOLD, PWP	1
		(Complete assembly)	
01	NSS	NUT, SOLENOID VALVE	2
		(included with item 3 and 4)	
02	809151	12 VDC WEATHER PACK COIL	2
03	809277	SOLENOID VALVE	1
	809153	SEAL KIT	1
		(*Items included are not shown.*)	
04	809152	SOLENOID VALVE	1
	809153	SEAL KIT	1
		(*Items included are not shown.*)	
05	NSS	MANIFOLD	1

silverhorn.co.uk

Frame Stabilizing Valve

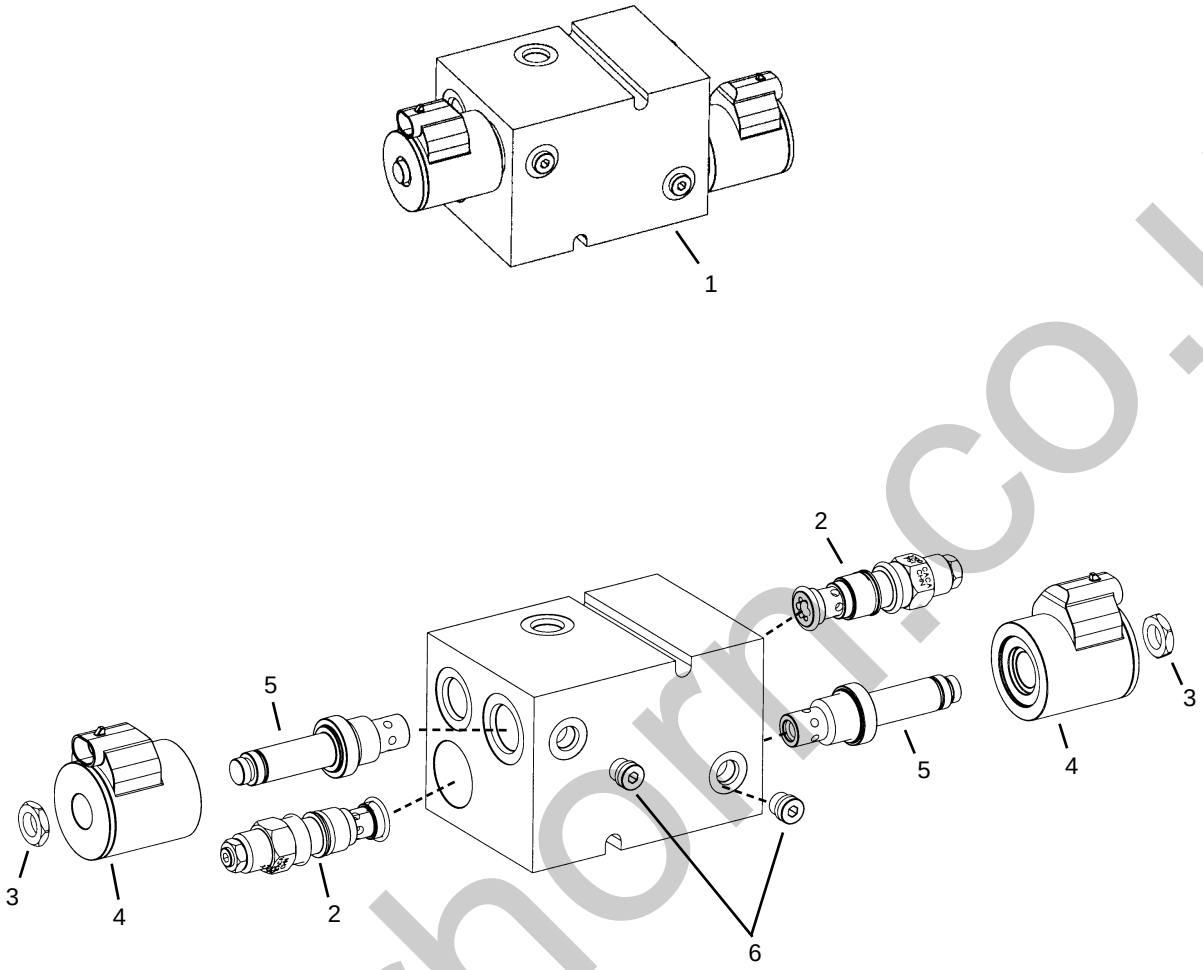

Ref. No.	Part No.	Description	Qty. Req.
01	808305	FRAME STABILIZING VALVE	1
		(includes all items shown)	
02	809267	COUNTER BAL. VALVE 3700PSI	2
	51200416	CBV SEAL KIT	2
03	NSS	NUT *(included with item 5)*	2
04	808407	E-COIL 12VDC	2
05	808408	CARTRIDGE *(only)*	2
	809154	SEAL KIT *(included with cartridge)*	2
06	809155	PLUG -4ORM	2

NOTE: *Items included in seal kits are not shown.*

silverhorn.co.uk

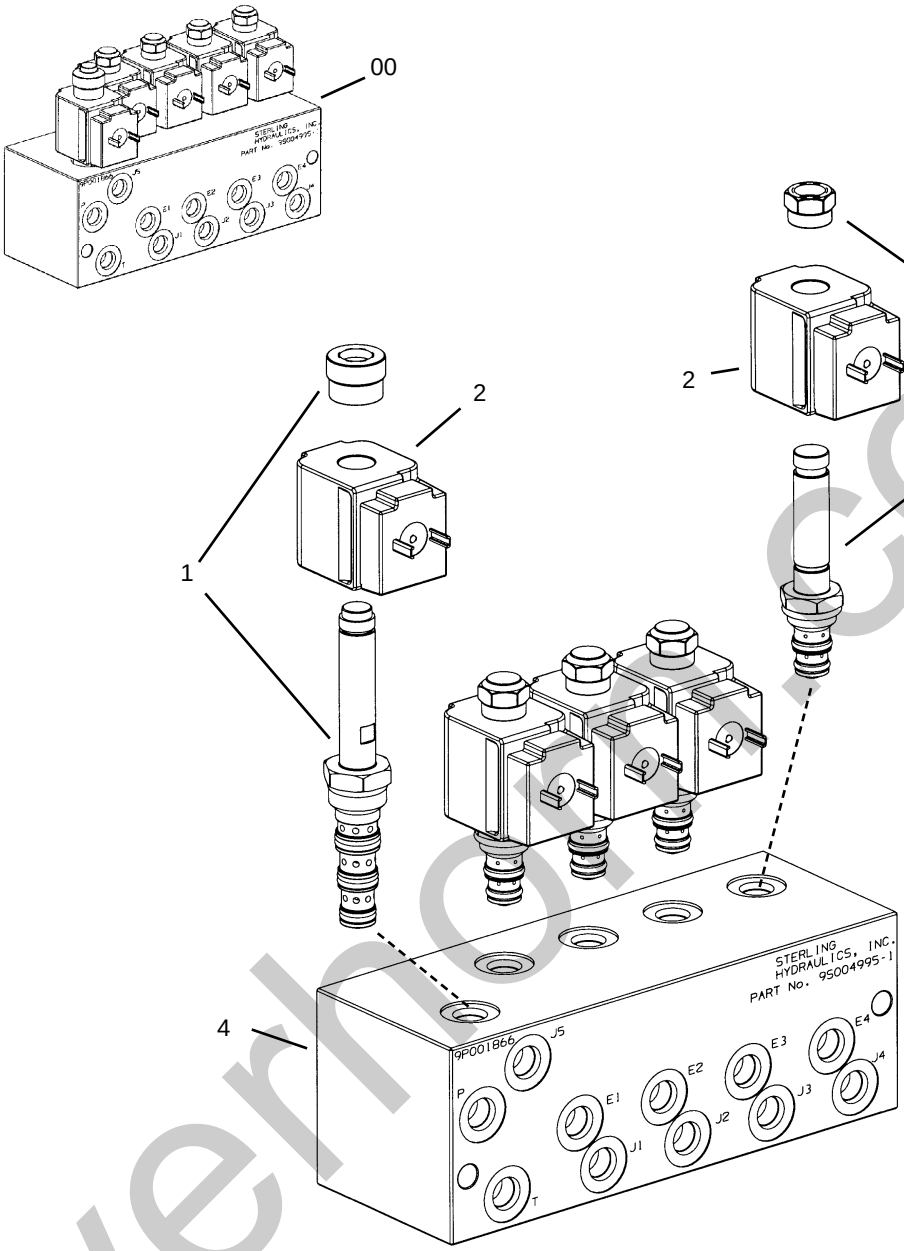

Ref. No.	Part No.	Description	Qty. Req.
--	809732	RADIO REMOTE VALVE	1
		(includes all items shown and listed)	
01	809733	2/4 WAY SOLENOID VALVE	1
	809734	SEAL KIT FOR VALVE	1
02	809735	12 VDC COIL (DIN CONN.)	5
03	809736	PROPORTIONAL PRESS. VALVE	4
	809737	SEAL KIT FOR VALVE	AR
04	NSS	MANIFOLD	1

Ref. No.	Part No.	Description	Qty. Req.
		-- ITEMS NOT SHOWN --	
--	809738	SHUTTLE VALVE	4
	809739	SEAL KIT FOR VALVE	AR

silverhorn.co.uk

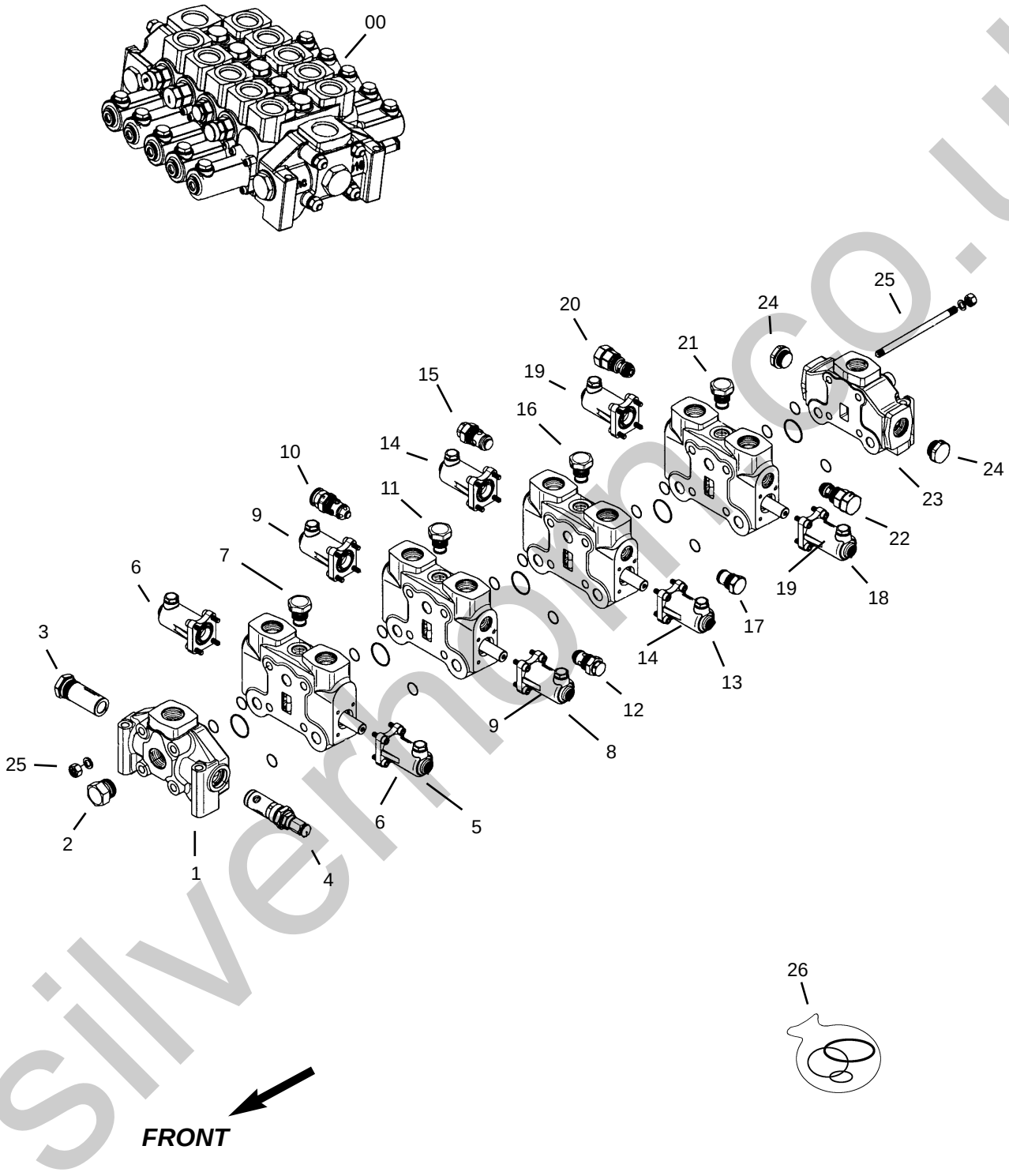

silvermoorco.uk

Ref. No.	Part No.	Description	Qty. Req.
00		MAIN VALVE	1
	808139	*Note x - (4-section valve)*	
	51200415	*Note y - (5-section valve - Shown)*	
01[a]	808362	INLET SECTION *(includes items 1-4)*	1
02[h]	808359	PLUG KIT 1-5/16" UNF	1
03[h]	808358	PLUG KIT	1
04	808357	PILOT OPERATED RELIEF VLV	1
05[b]	808363	WORK SECTION *(Frame Level)* *(includes items 5-7)*	1
06[g]	808361	HYD. CONTROL KIT *(Actuator)*	1
07[h]	808360	CHECK VALVE	1
08[c]	808364	WORK SECTION *(Boom In/out)* *(includes items 8-12)*	1
09[g]	808361	HYD. CONTROL KIT *(Actuator)*	1
10[h]	808356	ANTI-SHOCK VALVE (140 BAR)	1
11[h]	808360	CHECK VALVE	1
12[h]	808354	ANTI-CAVITATION VALVE	1
13[d]	808365	WORK SECTION *(Boom Up/Down)* *(includes items 13-17)*	1
14[g]	808361	HYD. CONTROL KIT *(Actuator)*	1
15[h]	808354	ANTI-CAVITATION VALVE	1
16[h]	808360	CHECK VALVE	1
17[h]	808355	KIT PLUG	1
18[e]	808366	WORK SECTION *(Tilt)* *(includes items 18-22)*	1
19[g]	808361	HYD. CONTROL KIT *(Actuator)*	1
20[h]	808353	COMBINATED VALVE	1
21[h]	808360	CHECK VALVE	1
22[h]	808353	COMBINATED VALVE	1
23	808369	OUTLET SECTION *(includes item 24)*	1
24[h]	808375	PLUG	AR
25[i]		TIE ROD KIT *(includes 1 bolt, 2 nuts & 2 washers)*	4
	808367	FOUR-SECTION VALVE	
	808266	FIVE-SECTION VALVE	
26[f]	808370	SEAL KIT	1

a *Use seal kit #808371 for all related seals.*

b *Use seal kit #808382 for all related seals.*

c *Use seal kit #808372 for all related seals.*

d *Use seal kit #808373 for all related seals.*

e *Use seal kit #808374 for all related seals.*

f *Items included with seal kit are not shown in detail. For five-section valves, order seal kits: (1) 808370 main valve seal kit and (1) 808392 auxiliary section seal kit.*

g *Includes outer caps, o-rings, bolts, plug and internal spool spring for this work section; does not include o-rings for valves/plugs or the spool.*

h *Includes required seals/o-rings for this valve/plug. Seals/o-rings for this valve are not sold individually, however they are included with the work section seal kit where this valve is used.*

i *Order four kits to replace all four studs, eight nuts and eight washers.*

x *Does not include auxiliary hydraulics valve section.*

y *Includes auxiliary hydraulics valve section (not shown) refer to next page for information regarding auxiliary hydraulics work section.*

silvernorm.co.uk

Main Valve - Auxiliary Hydraulics Work Section

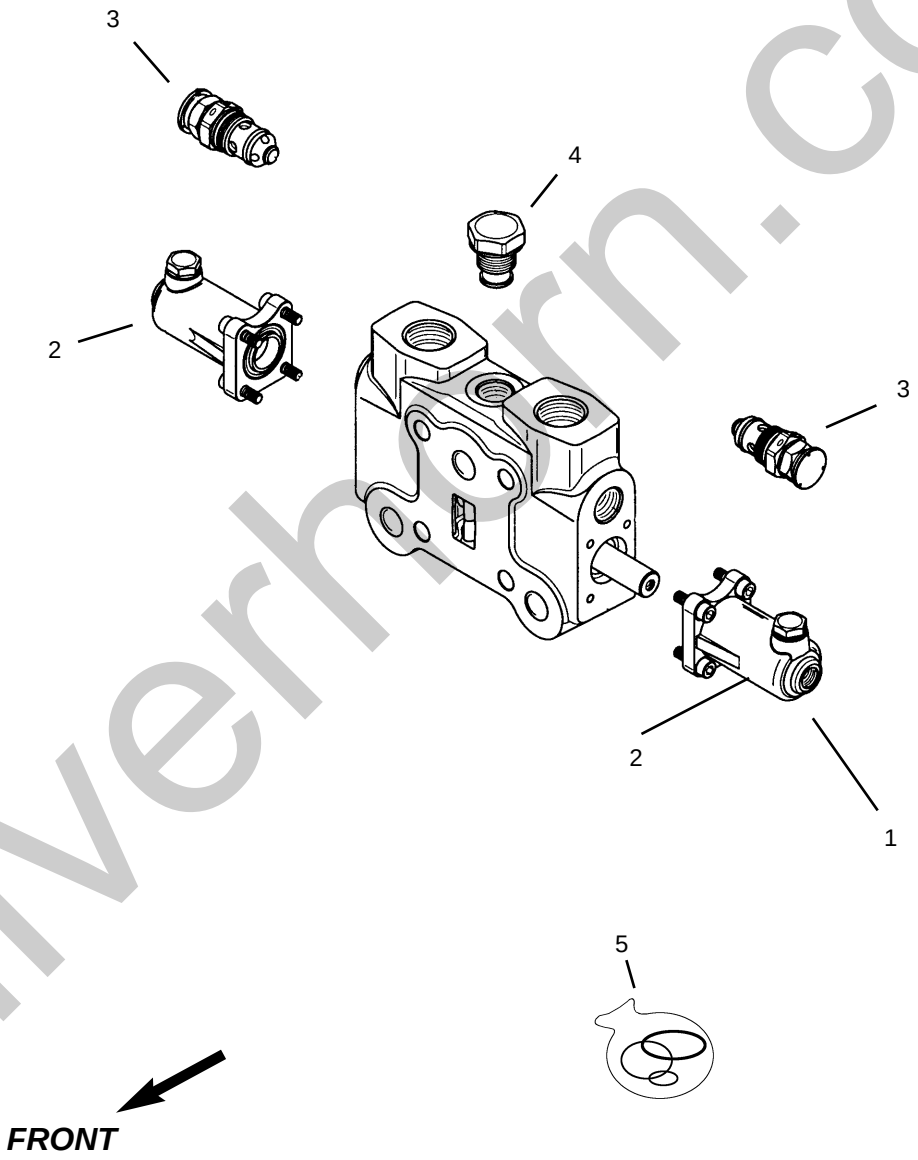

silverhorn.co.uk

Main Valve - Auxiliary Hydraulics Work Section

Ref. No.	Part No.	Description	Qty. Req.
01[e]	814496	AUXILIARY HYD WORK SECT. *(includes items 1-4)*	1
02[a]	808361	HYD. CONTROL KIT *(Actuator)*	1
03[c]	808391	ANTI-SHOCK VALVE	1
04[c]	808360	CHECK VALVE	1
05[b]	808392	SEAL KIT	1

Ref. No.	Part No.	Description	Qty. Req.
		-- ITEMS NOT SHOWN --	
--	808266	KIT, FIVE SECTION TIE BOLT *(includes 1 bolt, 2 nuts & 2 washers)*	4

a *Includes outer caps, o-rings, bolts, plug and internal spool spring for this work section; does not include o-rings for valves/plugs or the spool.*

b *Items included with seal kit are not shown in detail.*

c *Seals and o-rings for this valve are not sold individ ually; however, they are included with the work sec tion seal kit where this valve is used.*

d *Order four kits to replace all four studs, eight nuts and eight washers.*

e *This valve section is included with the five-section main valve P/N 51200415.*

silverhorn.co.uk

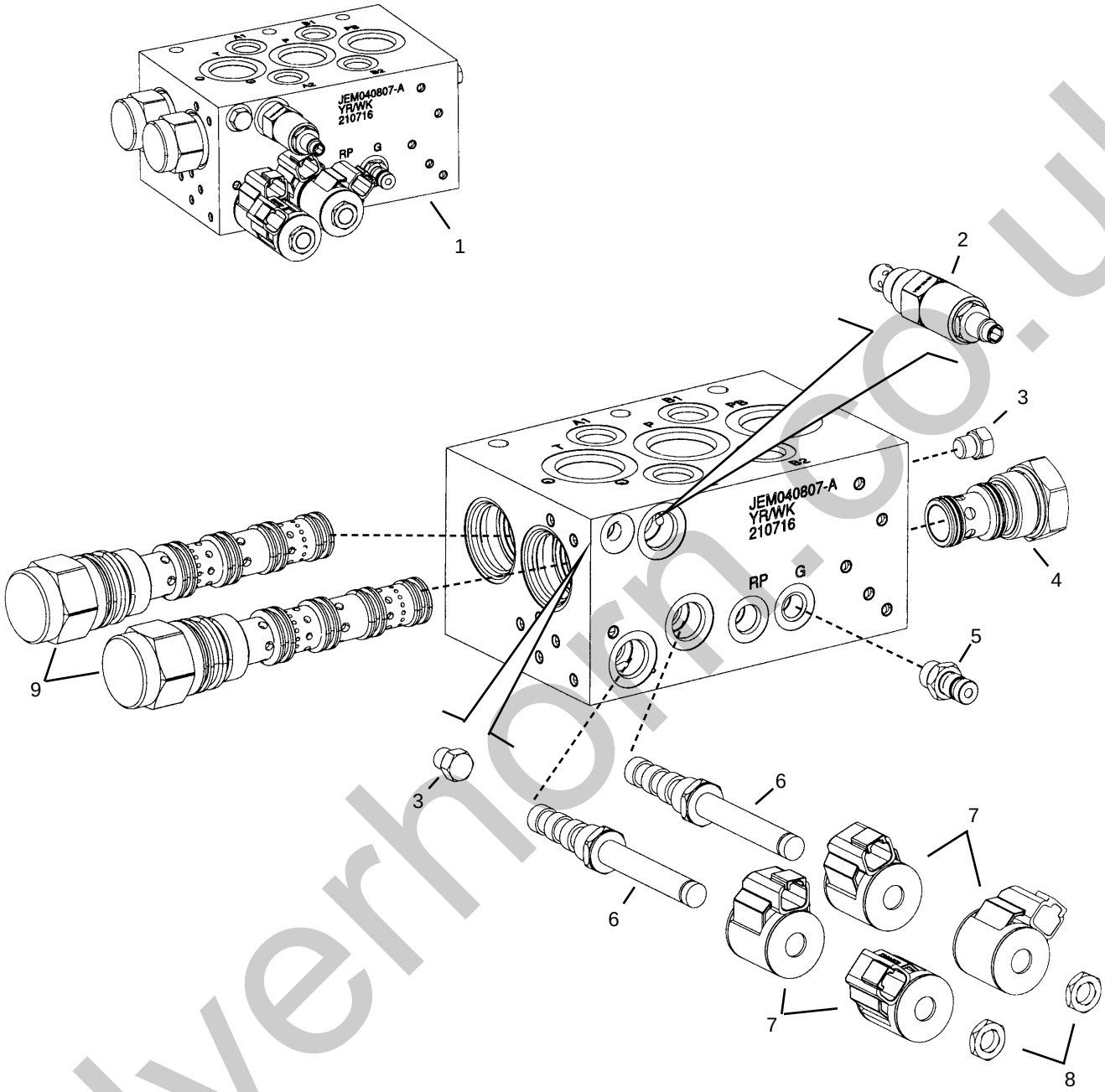

silverhorn.co.uk

Ref. No.	Part No.	Description	Qty. Req.
01	51200127	OUTRIGGER VALVE *(complete)*	1
02	809157	RELIEF/ DIFFERENTIAL VALVE	1
	809156	SEAL KIT	1
03	51200428	-4 ORM SAE PLUG	2
04	51200422	PILOTED SPOOL	1
	51200423	SEAL KIT	1
05[a]	809174	TEST PORT	1
06	51200424	4-WAY/3-POS. VALVE	2
	51200425	SEAL KIT *(1 per valve)*	AR
07	51200427	E-COIL	4
08	NSS	COIL NUT *(included with item 6)*	2
09	51200426	PROPORTIONAL VALVE	2
		-- (ITEMS NOT SHOWN) --	
25	51200125	WIRE HARNESS, OUTRIGGERS	1
a	*Optional parts (not included or shown):*		
	808704	*DUST CAP*	*1*
	51200420	*FEMALE COUPLER*	*1*

silverhorn.co.uk

Controller - Tilt / Frame Level

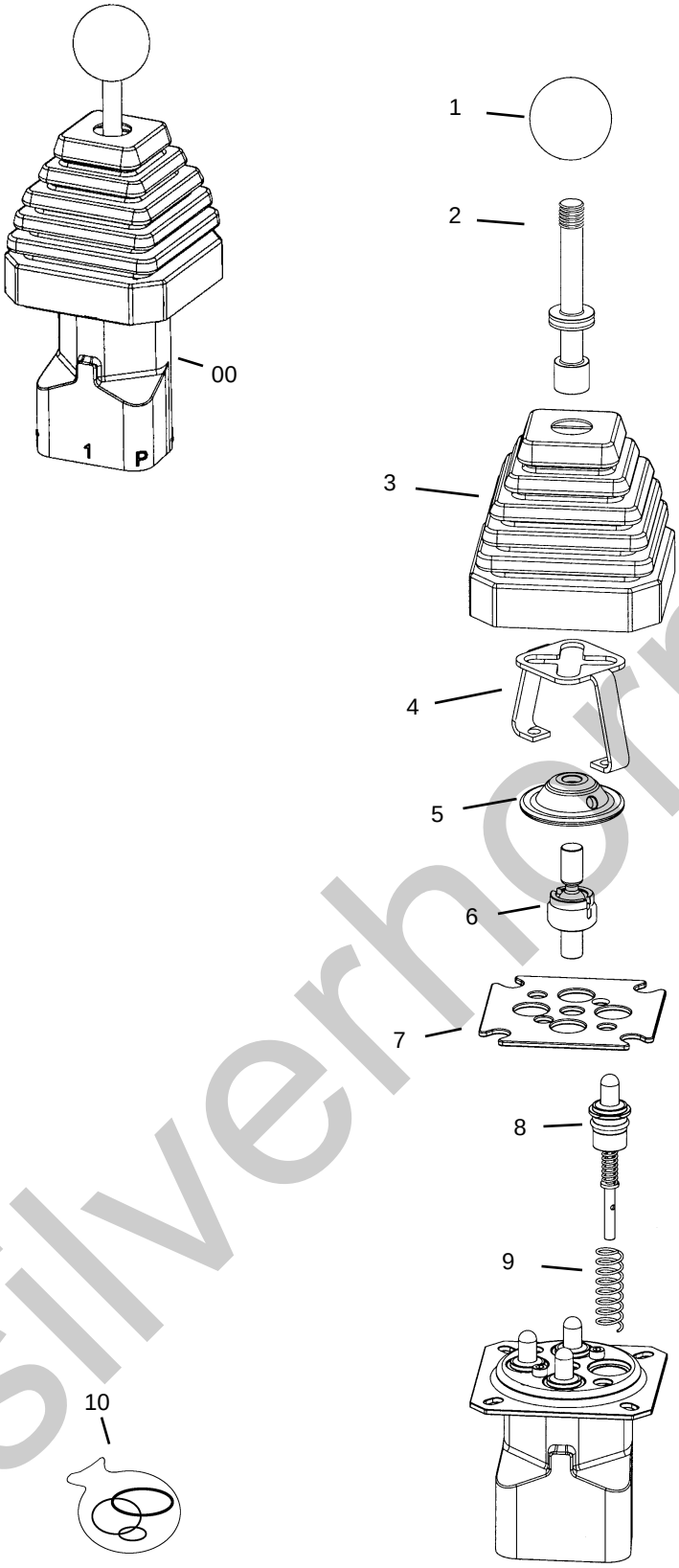

silverhorn.co.uk

Controller - Tilt / Frame Level

Ref. No.	Part No.	Description	Qty. Req.
00	808263	HYD. CONTROLLER *(Complete)*	1
01	808406	KNOB	1
02	808399	LEVER ROD *(as shown)*	1
03	808400	BOOT	1
04	809274	LOCK GATE	1
05	808401	SELECTOR DISC	1
06	808402	PIVOT/ BALL JOINT	1
07	808403	PLATE / BOOT MOUNT	1
08	808386	METERING CURVE *(as shown)*	4
09	808387	RETURN SPRING	4
10[a]	808404	SEAL KIT	1

a *Items included in seal kit are not shown.*

silverhorn.co.uk

Controller - Boom Lift / Extend

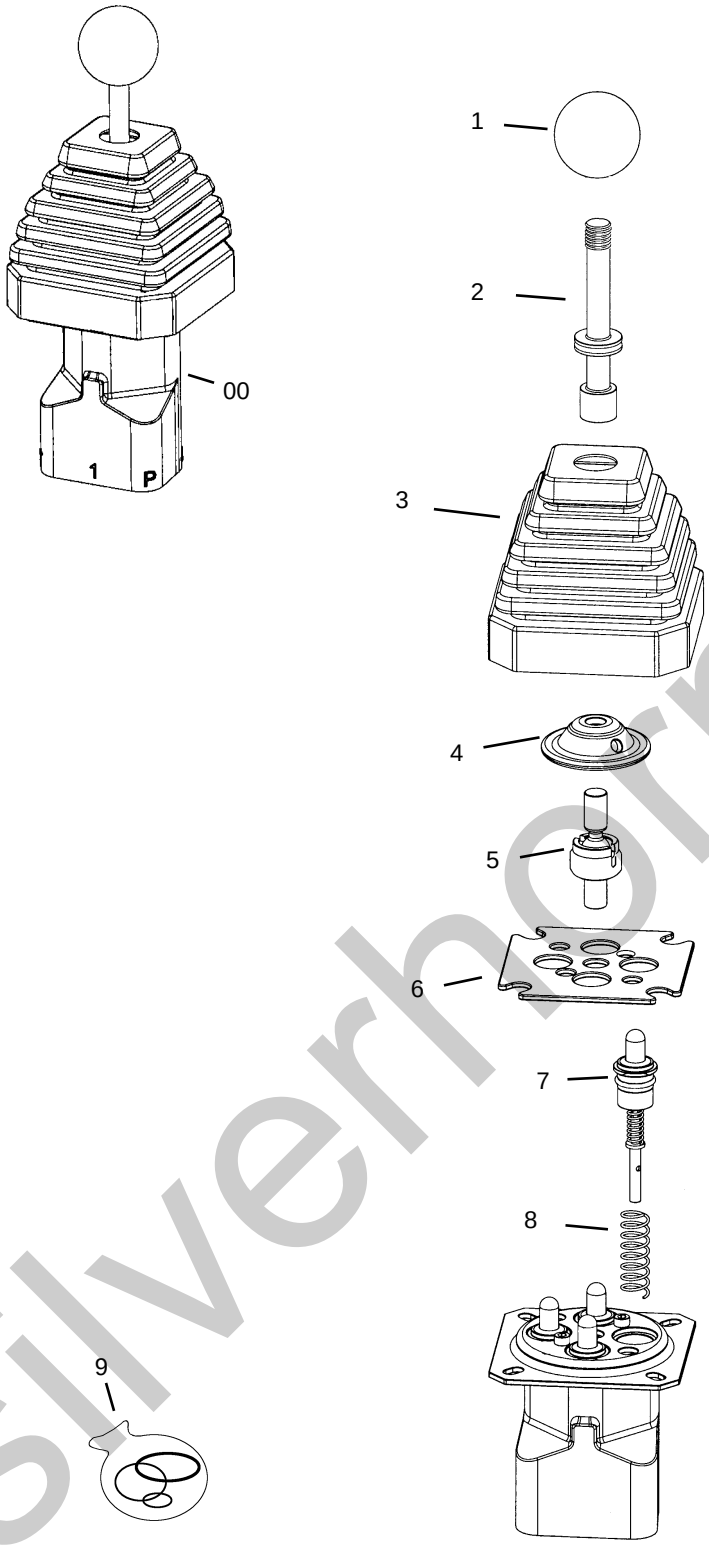

silverhorn.co.uk

Controller - Boom Lift / Extend

Ref. No.	Part No.	Description	Qty. Req.
00	808139	HYD. CONTROLLER *(Complete)*	1
01	808406	KNOB	1
02	808399	LEVER ROD *(as shown)*	1
03	808400	BOOT	1
04	808401	SELECTOR DISC	1
05	808402	PIVOT/ BALL JOINT	1
06	808403	PLATE /BOOT MOUNT	1
07	808386	METERING CURVE *(as shown)*	4
08	808387	RETURN SPRING	4
09[a]	808404	SEAL KIT	1

a *Items included in seal kit are not shown.*

silverhorn.co.uk

Controller - Auxiliary Hydraulics

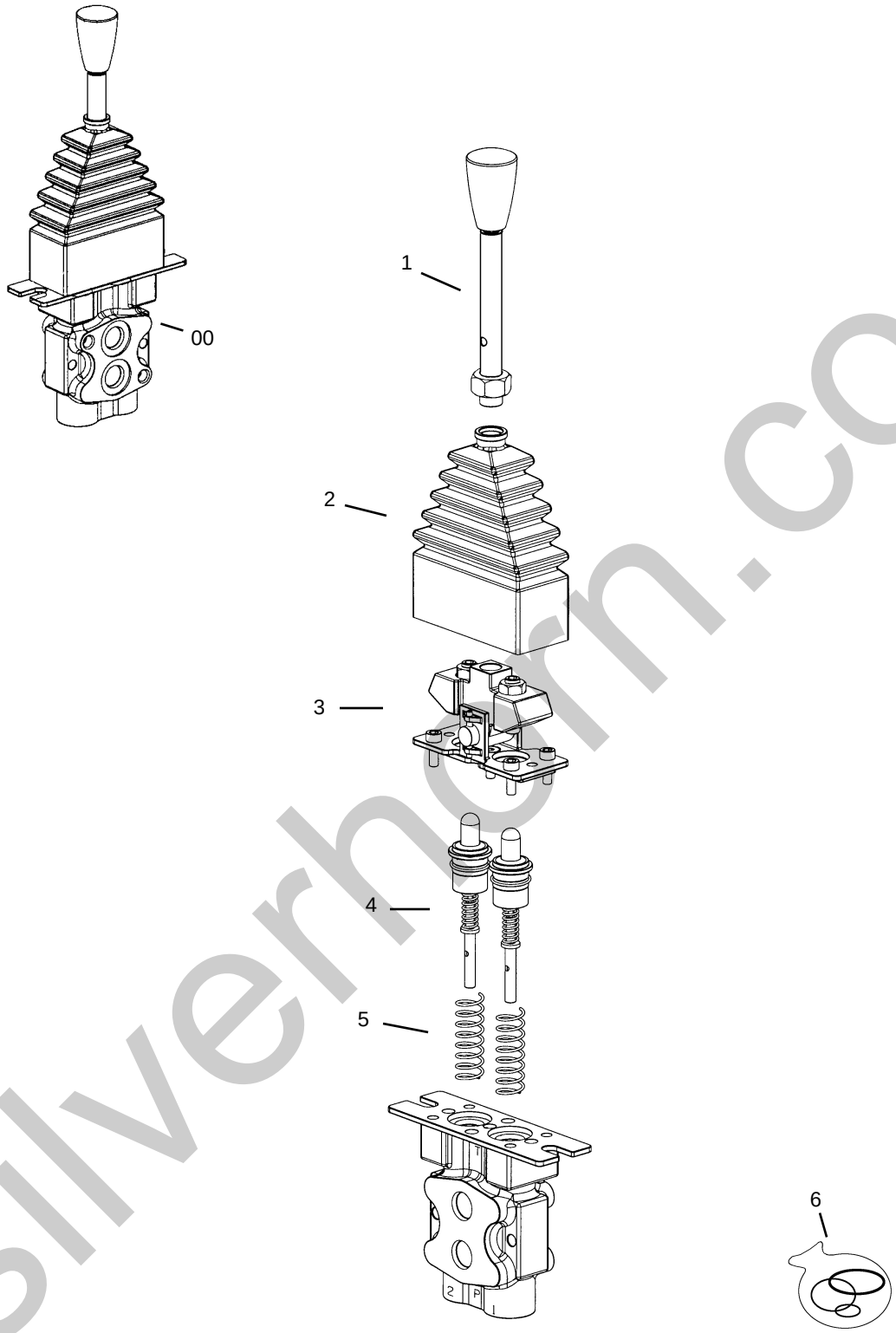

silverhorn.co.uk

Controller - Auxiliary Hydraulics

Ref. No.	Part No.	Description	Qty. Req.
00	808139	CONTROLLER, HYDRAULIC	1
01	808384	LEVER ROD *(as shown)*	1
02	809275	BOOT *(included with item 3)*	1
03	808385	CONTROL KIT *(includes item 2)*	1
04	808386	METERING CURVE *(as shown)*	2
05	808387	RETURN SPRING	2
06[a]	808390	SEAL KIT	1

a *Items included in seal kit are not shown.*

silverhorn.co.uk

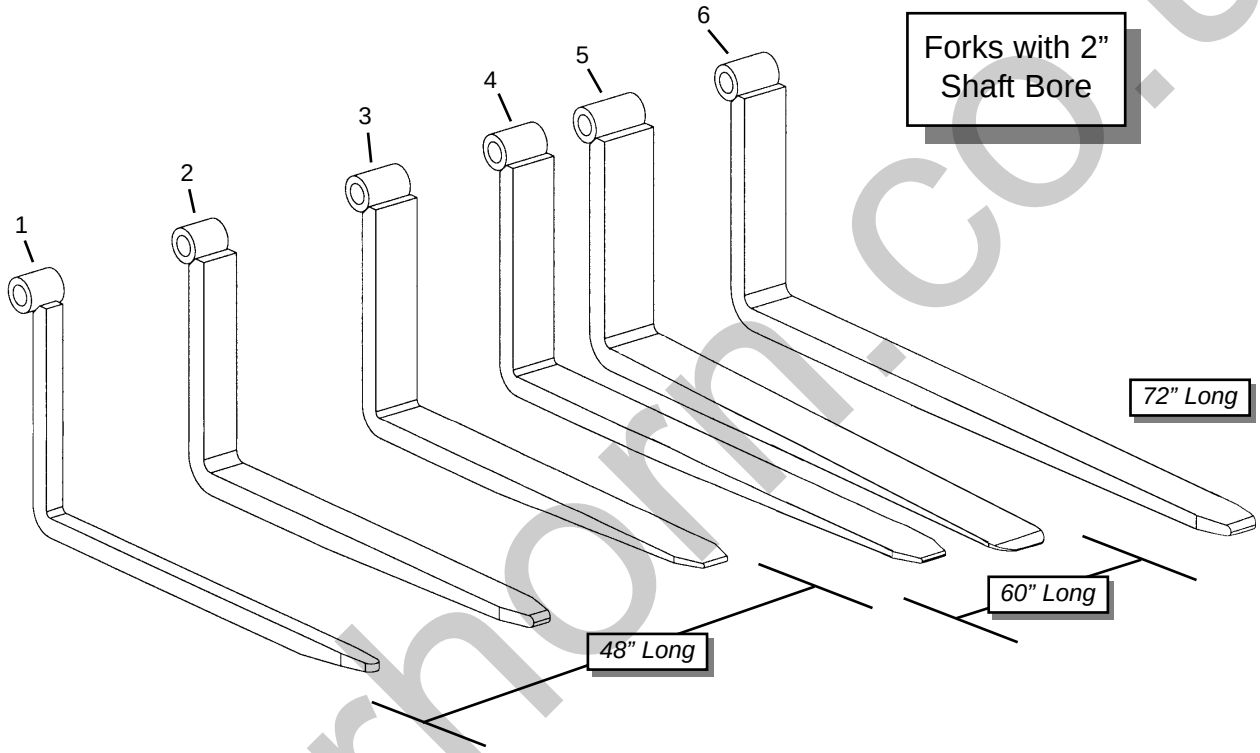

silverhorn.co.uk

To order forks, please call the Factory Sales Department at (262) 334-6601.

Ref. No.	Part No.	Description	Qty. Req.
		-- 2" FORK SHAFT DIAMETER --	
		(48" long)	
01		FORK, 48"X2"X2" *(4,200 lbs.)*	4
02		FORK, 48"X4"X2-1/4" *(12,000 lbs.)*	2
03		FORK, 48"X5"X2" *(10,500 lbs.)*	2
		(60" long)	
04		FORK, 60"X5"X2" *(10,500 lbs.)*	2
05		FORK, 60"X6"X2-1/4" *(12,000 lbs.)*	2
		(72" long)	
06		FORK, 72"X5"X2" *(10,500 lbs.)*	2

⚠ WARNING

When ordering forks, select forks with a rating capacity that meets or exceeds the lifting capacity of the machine; failure to use the correct forks could result in injury or death. For more information contact dealer (or manufacturer).

silverhorn.co.uk

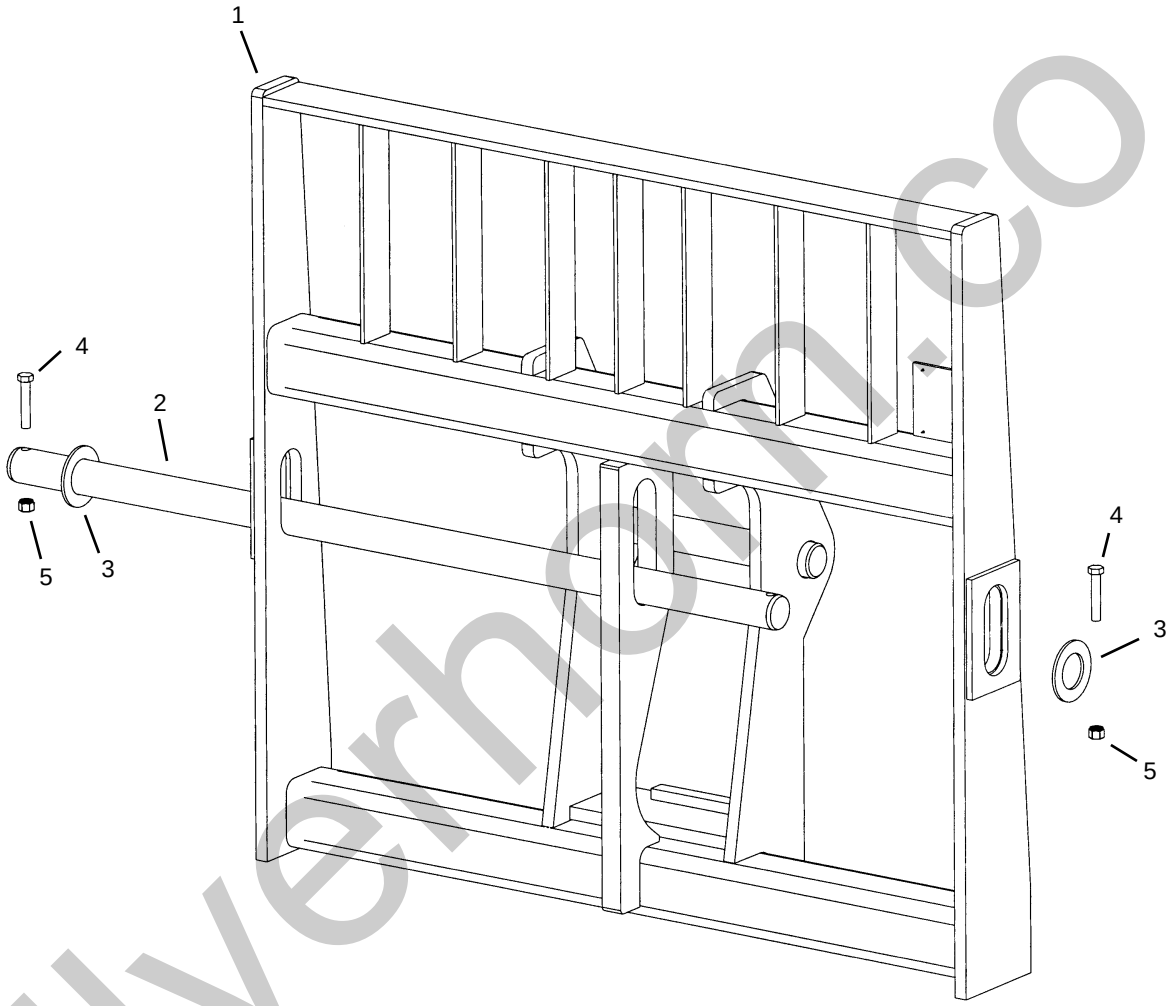

silverhorn.co.uk

Ref. No.	Part No.	Description	Qty. Req.
01		CARRIAGE WELDMENT	1
	809248	48” *(uses 2” pin)*	1
	809249	66” *(uses 2” pin)*	1
	814639	72” *(uses 2” pin)*	1
02		FORK SHAFT BAR	1
	808794	*(2”X51-1/2”)*	1
	808764	*(2”X69-1/2”)*	1
	809814	*(2”X75-1/2”)*	1
03	808431	FORK SHAFT WASHER	2
04	808652	BOLT, 1/2”X2-3/4” BOLT	2
05	808665	1/2”-13 NYLON INSERT NUT	2

silverhorn.co.uk

Fork-Shift Carriage

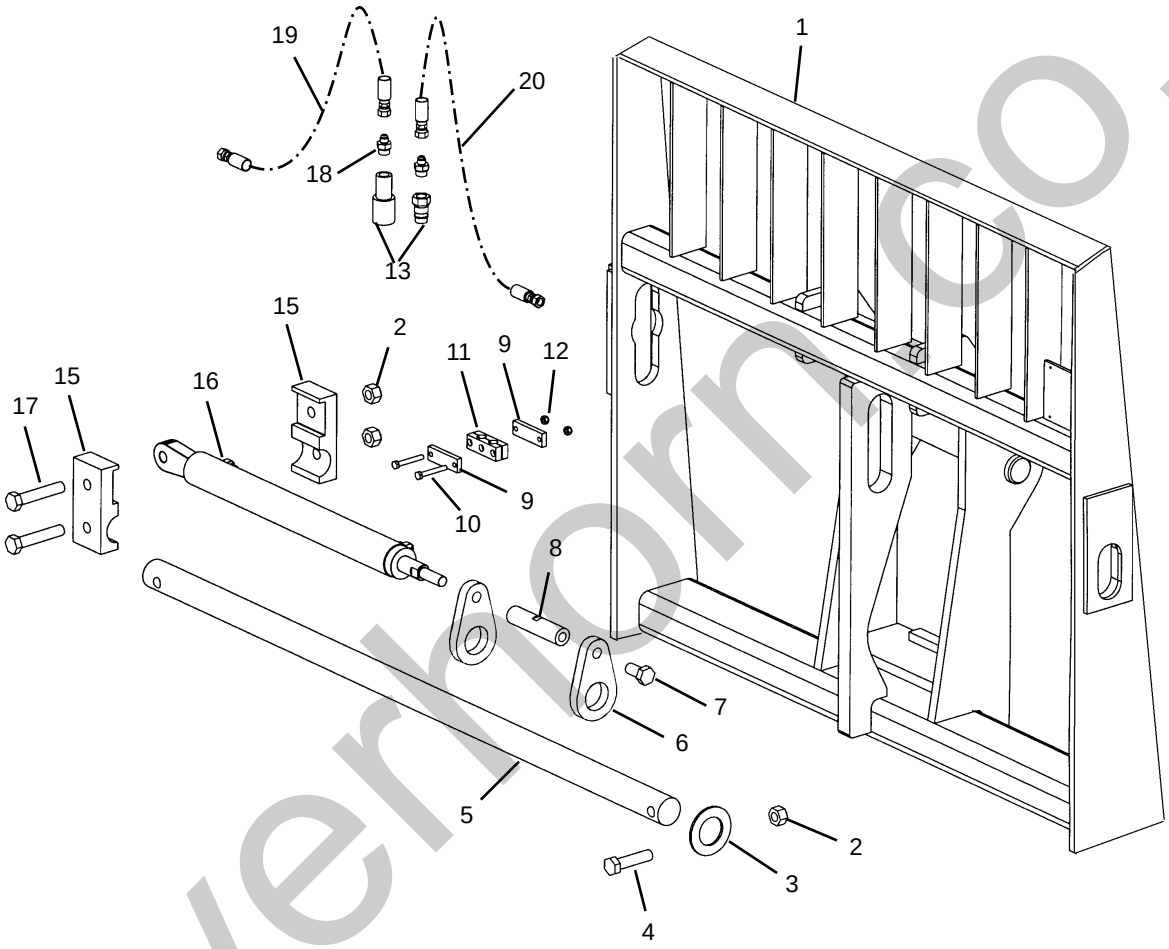

silverhorn.co.uk

Ref. No.	Part No.	Description	Qty. Req.
01	809250	FORK-SHIFT CARRIAGE	1
02	808626	3/4”-10 NYLON INSERT NUT	3
03	808431	FORK SHAFT WASHER	1
04	808616	3/4”-10X3” BOLT	1
05	808822	FORK SHAFT, 50”	1
06	808824	FORK SLIDE PLATE	2
07	814650	3/4”-10X1-1/2” BOLT	1
08	*Note a*	FORK SLIDE COUPLER	1
09	808727	TWIN CUSHION TOP PLATE	2
10	809251	5/16”-18X2-1/4” BOLT	2
11	808728	TWIN HOSE CUSHION	1
12	808662	5/16”-18 NYLON INSERT NUT	2
13	808796	QUICK-COUPLER SET	1
15	809252	CYLINDER MOUNT	2
16	808834	FORK-SHIFT CYLINDER	1
17	809253	3/4”-10X4” BOLT	2
18	808710	ADAP -8ORM -6JICM W/.06 ORF	2
19	809254	HOSE, -6 A6/A6 59”	1
20	808826	HOSE, -6 A6/A6 56”	1

a *For 4” wide forks use P/N 808823.*
For 5” wide forks use P/N 809276.

silverhorn.co.uk

Rotating Carriage

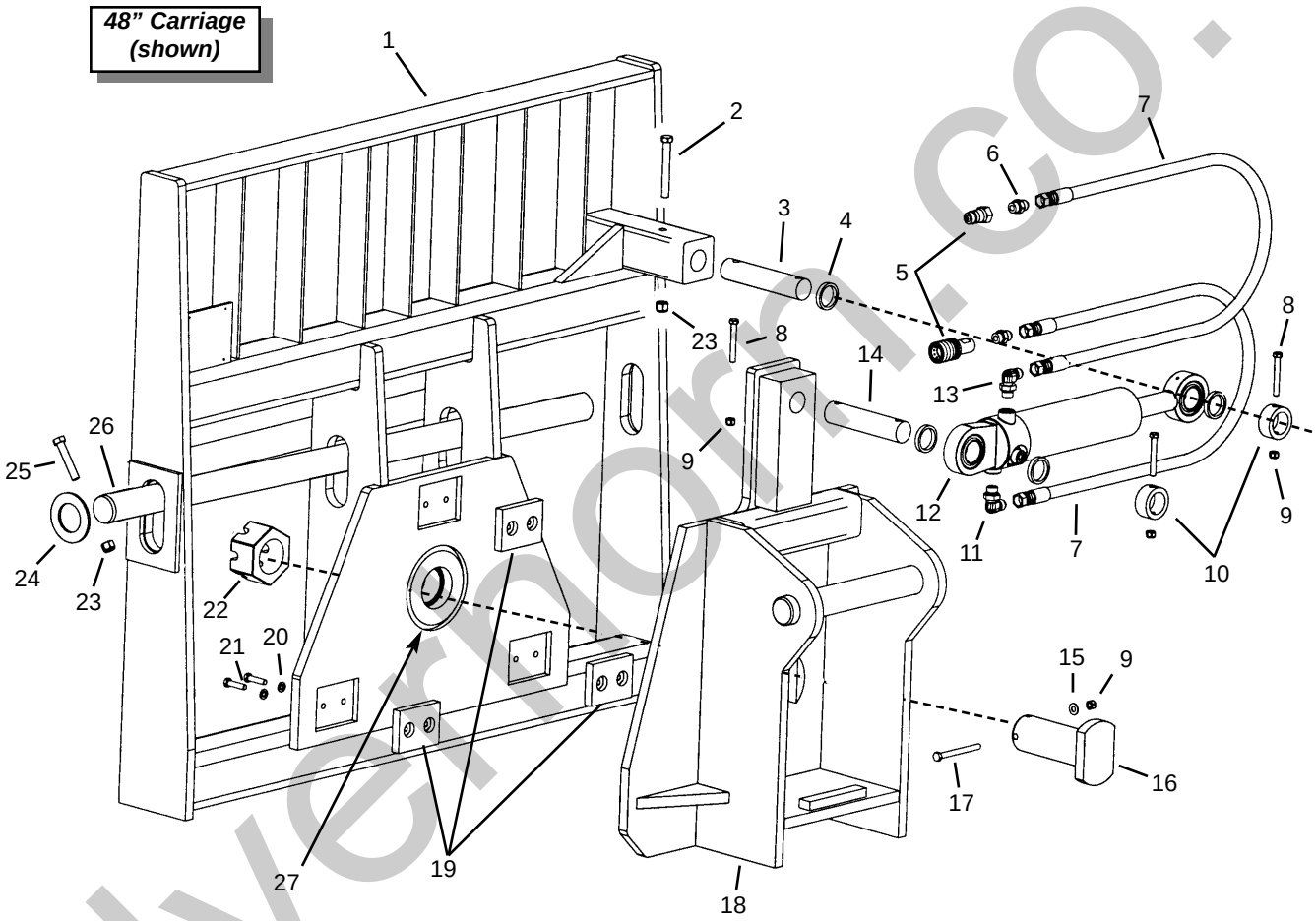

silvermoon.co.uk

Ref. No.	Part No.	Description	Qty. Req.
01		CARRIAGE, ROTATING	1
	51200429	*(48” Carriage) 2” dia. fork shaft*	
	51200430	*(66” Carriage) 2” dia. fork shaft*	
02	809257	1/2”X4” BOLT	1
03	808792	PIN, ROTATOR ROD END	1
04	808688	SPACER	4
05	808796	QUICK COUPLER SET	1
06	813708	ADAP -8ORM -8JICM STR	2
07	808750	HOSE, -8 A8/A8 53”	2
08	51200400	3/8”X2-3/4” BOLT	3
09	808663	3/8”-16 NYLON INSERT NUT	AR
10	808695	LOCK COLLAR 1.5” OD	2
11	808803	ADAP -8ORM -8JICM 90º w/ORF.	2
12	808918	ROTATE CYLINDER	1
13	808803	ADAP -8ORM -8JICM 90º w/ORF.	2
14	808791	PIN, ROTATOR BASE END	1
15	813591	3/8” FLAT WASHER	AR
16	51200431	ROTATOR PIN	1
17	808638	3/8”X4” BOLT	1
18	51200432	ROTATOR PLATE WELDMENT	1
19	808693	SLIDE PAD	3
20	813849	3/8” LOCK WASHER	6
21	813677	3/8”X1-1/2” BOLT	6
22	808635	2-1/2”-12 CASTLE NUT	1
23	808665	1/2”-13 NYLON INSERT NUT	4
24	808431	FORK SHAFT WASHER *(2” ID)*	2
25	808652	BOLT, 1/2”X2-3/4” *(2” dia. shaft)*	2
26		FORK SHAFT BAR	1
	808794	*(48” Carriage) 2” dia. fork shaft*	
	808764	*(66” Carriage) 2” dia. fork shaft*	
27	51200433	BEARING (*not shown)*	2
	808687	WASHER *(not shown)*	AR

silverhorn.co.uk

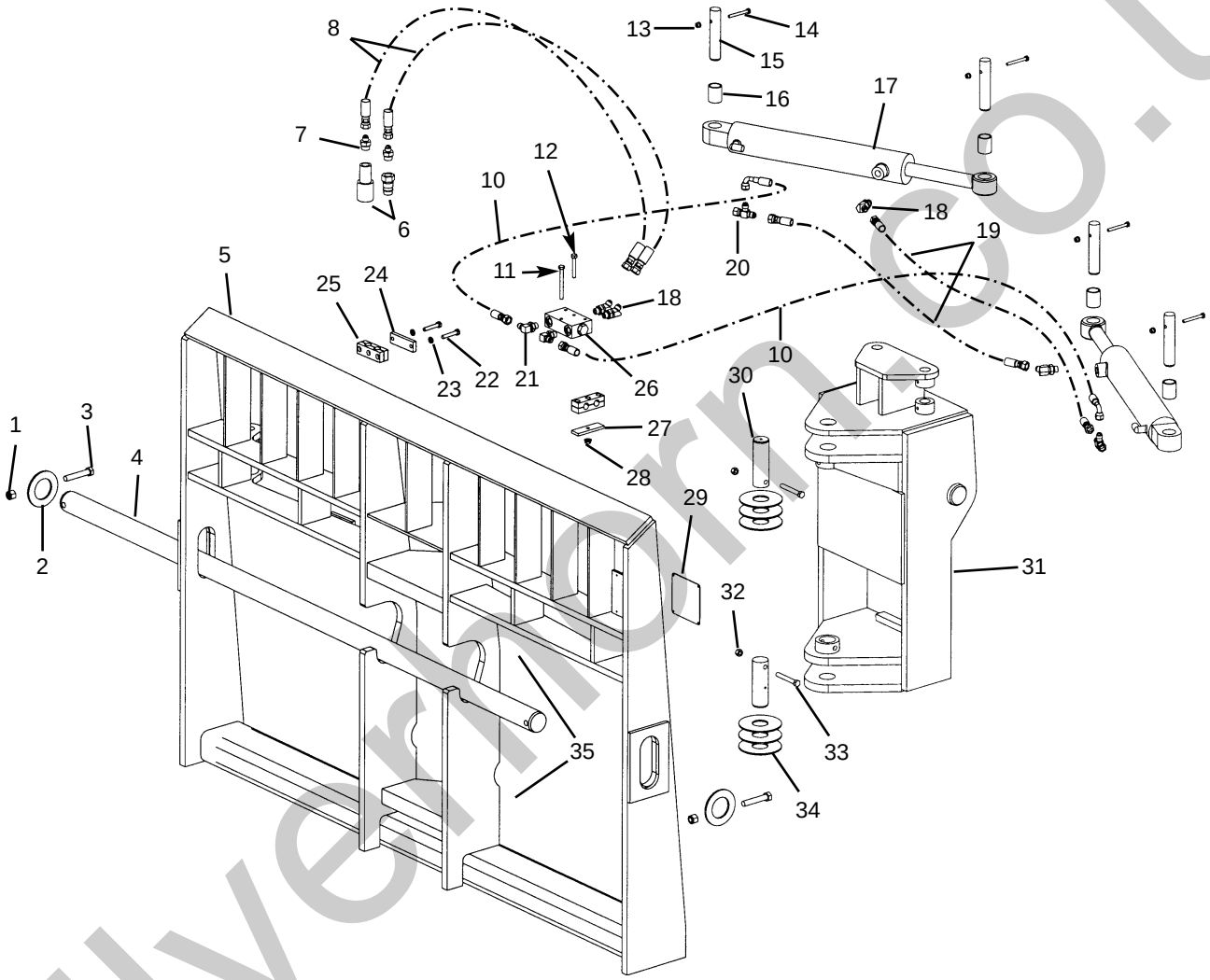

silvermoor.co.uk

90º Swing Carriage

Ref. No.	Part No.	Description	Qty. Req.
01	808665	1/2”-13 NYLON INSERT NUT	2
02	808431	FORK SHAFT WASHER	2
03	808652	1/2”X2-3/4” BOLT	2
04	808764	FORK SHAFT BAR (66” Carriage)	1
05	809258	66” CARRIAGE, SWING	1
06	808796	COUPLER, FEMALE	1
07	808710	ADAP -8ORM -6JICM STR W.06	2
08	808827	HOSE, -6 A6/A6 89”	2
10	808739	HOSE, -4 DS6/A6 22”	2
11	808415	5/16”X3” BOLT	1
12	808642	5/16”X2” BOLT	1
13	808661	1/4” NYLON INSERT NUT	4
14	808622	1/4”X2-1/4” BOLT	4
15	808741	PIN, SWING CYLINDER	4
16	808720	BUSHING	4
17	808738	SWING CYLINDER	2
18	808456	ADAP -6ORM -6JICM 45	4
19	808080	HOSE, -4 A6/A6 36”	2
20	814461	ADAP -6JICFS -6JICM TEE	2
21	813597	ADAP -6ORM -6JICM 90º	2
22	808628	5/16”-18X1-3/4” BOLT	2
23	808497	5/16” LOCK WASHER	2
24	808727	TWIN CUSH. TOP PLATE	1
25	808728	TWIN HOSE CUSHION	2
26	808937	VALVE, DUAL PO	1
27	809259	HOSE CUSH. TOP PLATE	1
28	808555	5/16” FLARE NUT	2
29	NSS	NAME PLATE	1
30	808740	PIN, CARRIAGE PIVOT	2
31	808920	SWING PIVOT WELDMENT	1
32	808663	3/8”-16 NYLON INSERT NUT	2
33	51200400	3/8”-16X2-3/4” BOLT	2
34	808737	THRUST WASHER	6
35	809260	BUSHING, CARRIAGE PIVOT *(Not shown)*	2

silverhorn.co.uk

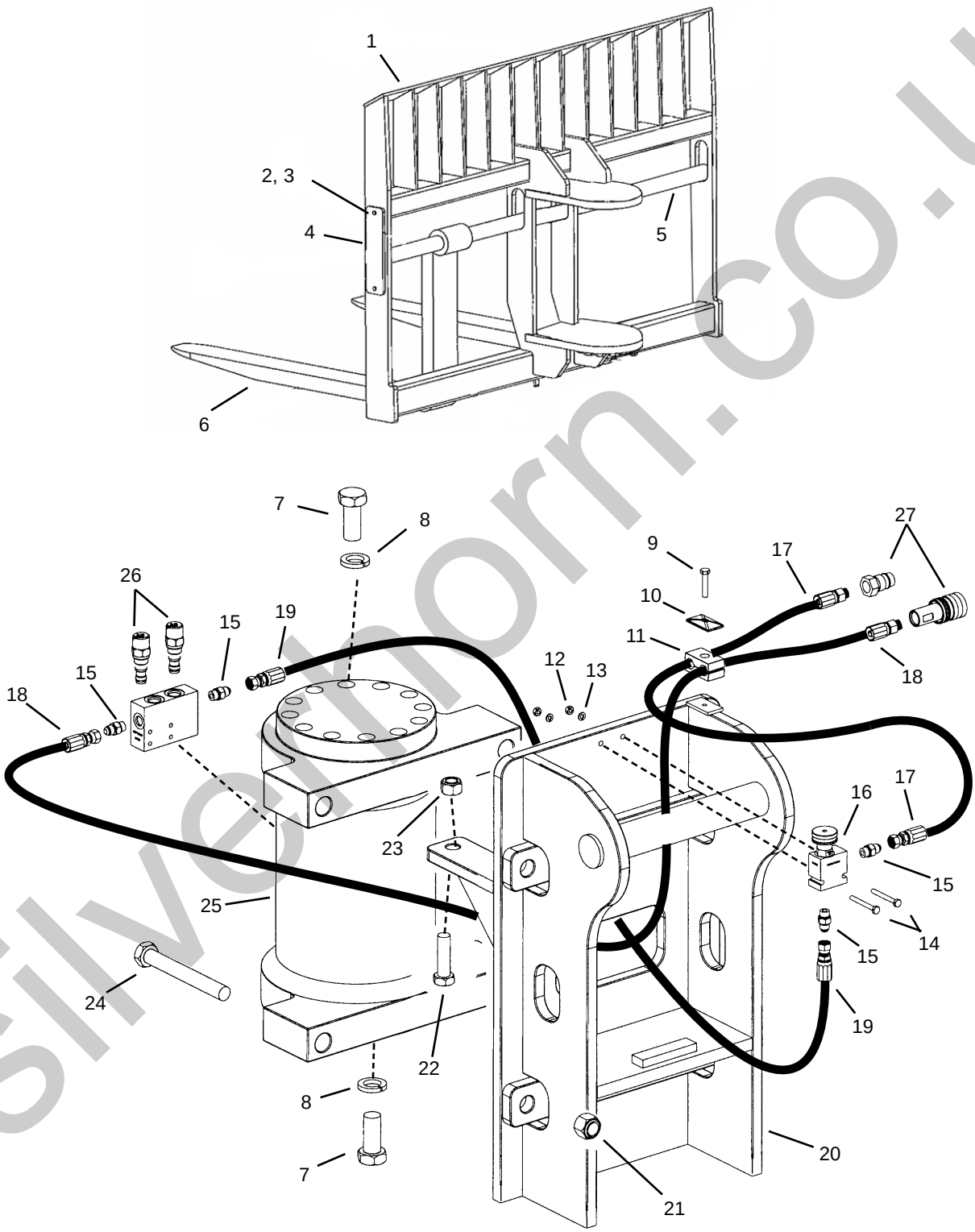

silverthorn.co.uk

Ref. No.	Part No.	Description	Qty. Req.
01	51200434	SWING CARRIAGE WELDMENT	1
02	814650	BOLT, 3/4”X1-1/2”	2
03	51200449	WASHER, 3/4” LOCK	2
04	51200435	SHAFT PLATE	1
05	51200436	FORK SHAFT, 2”	1
06	*Note a*	FORK	2
07	51200437	BOLT, 1”X2-1/4” GR8	AR
08	51200450	WASHER, 1” LOCK	AR
09	808645	BOLT, 5/16”X1-1/2”	1
10	808881	TOP PLATE	1
11	808880	CUSHION, 5/8” DOUBLE	1
12	51200451	NUT, 1/4”	2
13	808589	WASHER, 1/4” LOCK	2
14	808622	BOLT, 1/4”X2-1/4”	2
15	813596	ADAP., -6JICM -6ORM STR.	4
16	51200438	VALVE, FLOW CONTROL	1
17	51200439	HOSE, -6 A6/A8 46”	1
18	51200440	HOSE, -6 A6/A8 80”	1
19	51200441	HOSE, -6 A6/A6 32”	1
20	51200442	BACK BRACKET WELDMENT	1
21	51200443	NUT, 7/8”-9 NYLON INSERT	4
22	51200444	BOLT, 3/4”X2-1/2”	2
23	808626	NUT, 3/4” NYLON INSERT	2
24	51200445	BOLT, 7/8”-9X7” GR5	4
25	51200446	ACTUATOR	1
26	51200447	PILOT CHECK VALVE	2
	51200448	SEAL KIT	AR
27	808796	COUPLER SET	1

a *Use any fork with a 2” diameter shaft. Refer to the Fork section—under "Attachments"—in this manual for a listing of forks. To order parts, please call the Factory Sales Department at (262) 334-6601.*

silverhorn.co.uk

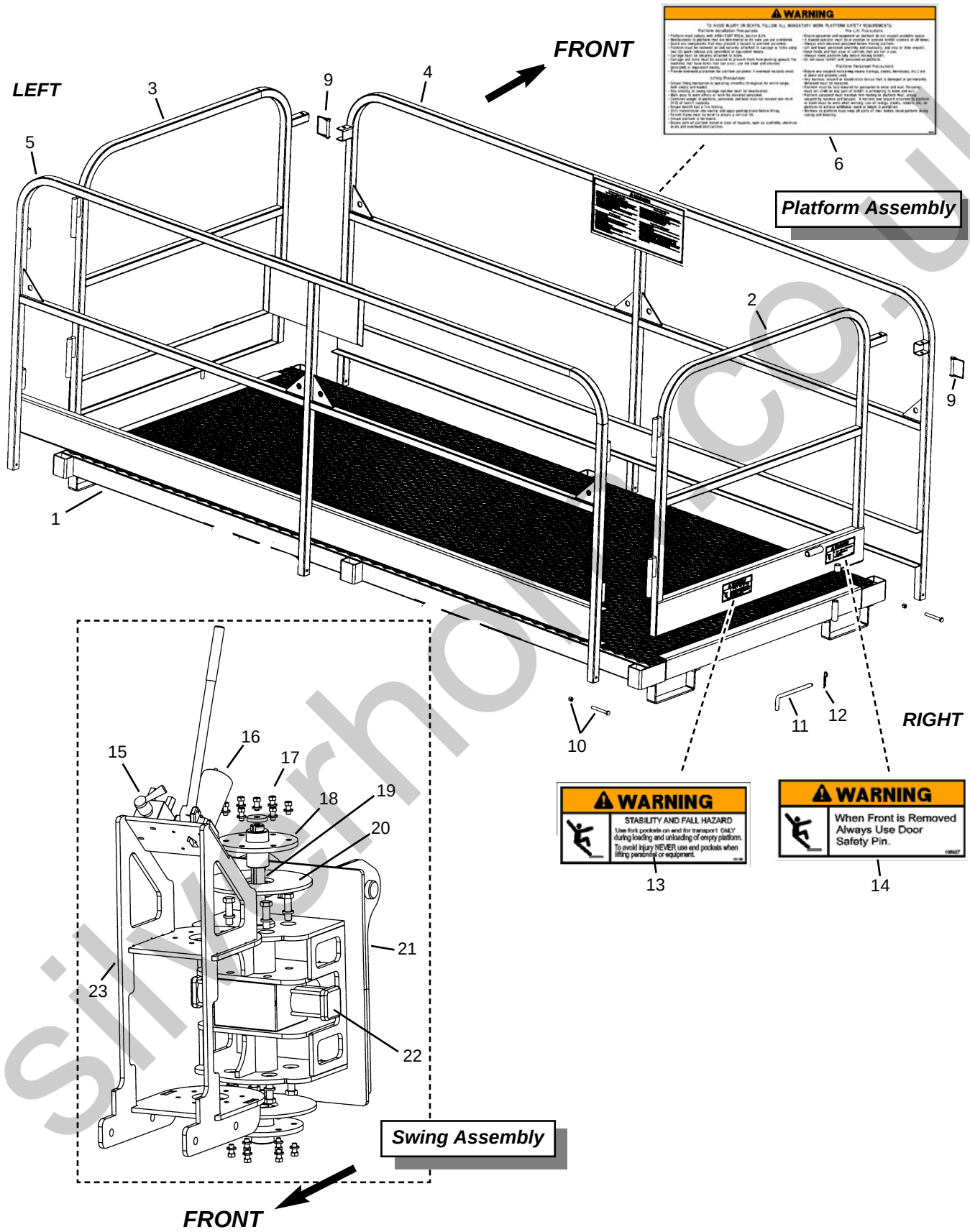

silverholt.co.uk

Ref. No.	Part No.	Description	Qty. Req.
01	51200452	BASE *(platform)*	1
02	51200453	PANEL, RIGHT DOOR	1
03	51200454	PANEL, LEFT DOOR	1
04	51200455	PANEL, FRONT	1
05	51200456	PANEL, REAR	1
06	51200457	DECAL, PLATFORM RULES	2
09	51200458	PIN, DOOR SAFETY	2
10	51200459	HARDWARE KIT *(includes six bolts and nuts)*	1
11	51200460	PIN, GATE RETAINER *(secures doors to platform when front panel is removed)*	2
12	51200461	PIN, HAIRPIN COTTER *(1/8")*	2
13	51200462	DECAL, FALL HAZARD	2
14	51200463	DECAL, DOOR SAFETY PIN	2
15	51200464	HYD. VALVE ASSEMBLY	1
16	51200465	PUMP ASSEMBLY	1
17	51200466	HARDWARE KIT *(pivot)*	1
18	51200467	HUB ASSEMBLY	2
19	51200468	SHAFT AND KEY ASSEMBLY	1
20	51200469	THRUST PLATE	2
21	51200470	BACK HALF *(attachment)*	1
22	51200471	ACTUATOR	1
23	51200472	FRONT HALF *(bracket)*	1

silverhorn.co.uk

Log / Pipe Carriage

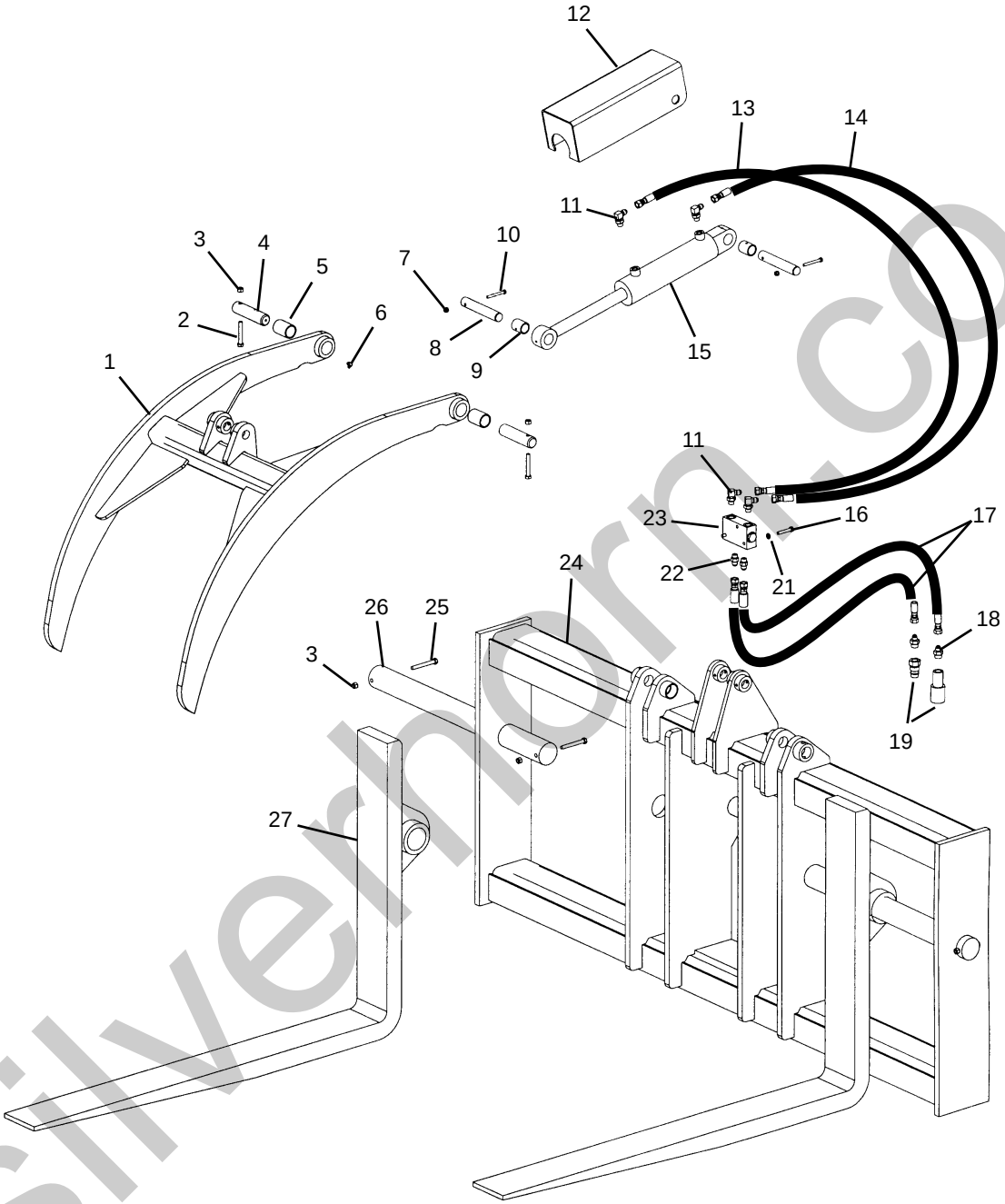

silvernorn.co.uk

Ref. No.	Part No.	Description	Qty. Req.
01	51200473	LOG GRAPPLE WELDMENT	1
02	808618	3/8”X2-1/2” BOLT	2
03	808663	3/8”-16 NYLON INSERT NUT	6
04	51200474	LOG GRAPPLE PIVOT PIN	2
05	51200475	BUSHING	2
06	808423	1/4-28 GREASE ZERK 90º	2
07	808661	1/4” NYLON INSERT NUT	2
08	51200476	GRAPPLE CYLINDER PIN	2
09	808720	BUSHING	2
10	808622	1/4X2-1/4” BOLT	2
11	813597	ADAP., -6ORM -6JICM 90º	4
12	51200477	CYLINDER COVER	1
13	51200478	HOSE, -4 A6/A6 32”	1
14	51200479	HOSE, -4 A6/A6 20”	1
15	814617	LOG GRAPPLE CYLINDER	1
16	808628	5/16”-18X1-3/4” BOLT	2
17	51200483	HOSE, -6 A6/A6 52”	2
18	808710	ADAP -8ORM -6JICM w/ORF	2
19	808796	COUPLER, SET	1
21	808497	5/16” LOCKWASHER	2
22	813596	ADAP -6ORM -6JICM	2
23	808937	VALVE, DOUBLE PORT CHECK	1
24	51200484	LOG CARRIAGE WELDMENT	1
25	813711	3/8”-16X3” BOLT	4
26	51200480	LOG FORK SHAFT	2
27		LOG FORK WELDMENT	2
		(To order forks, please call the Factory Sales Department at (262) 334-6601.)	

silverhorn.co.uk

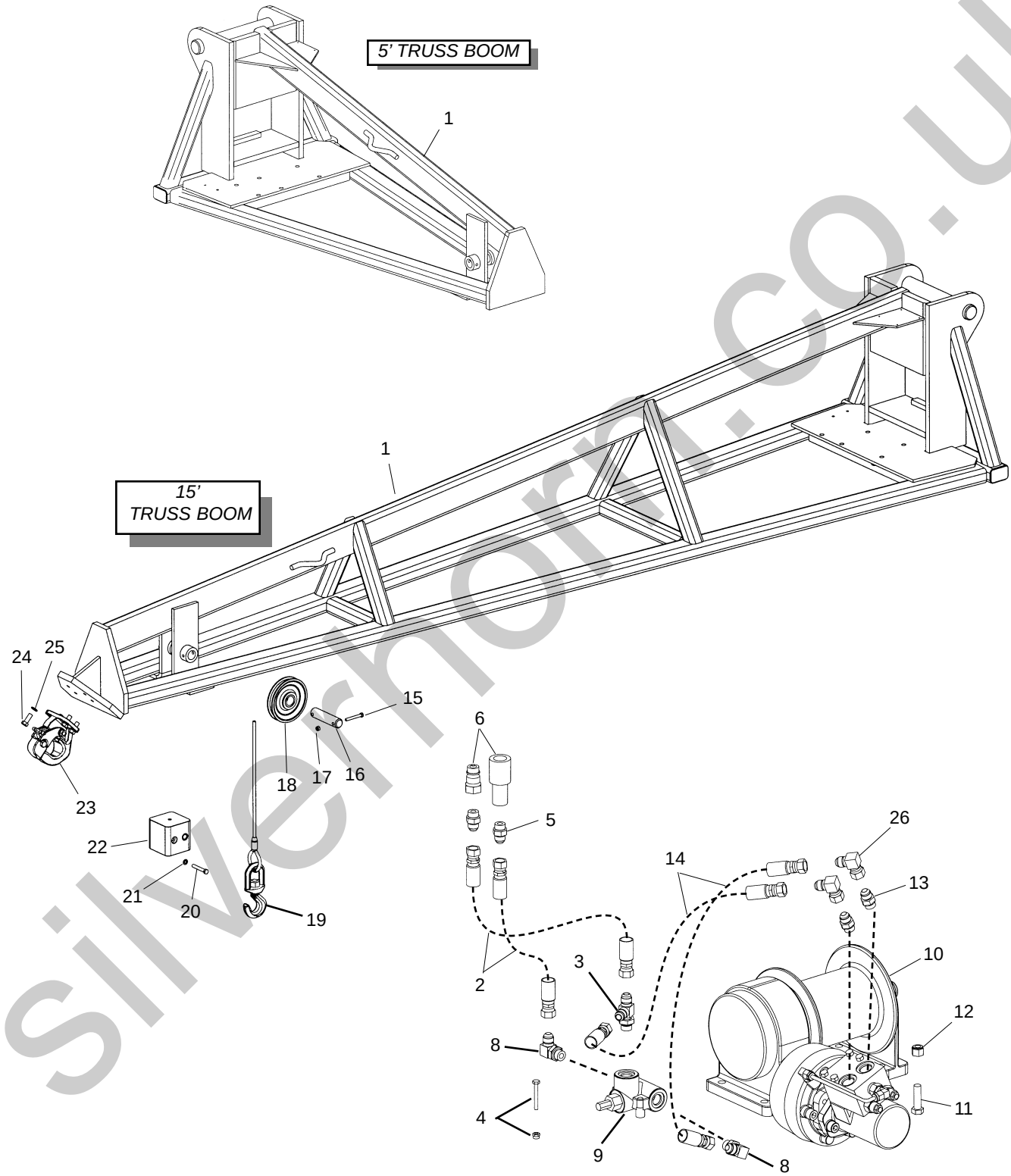

silverhorn.co.uk

Ref. No.	Part No.	Description	Qty. Req.
01	809404	5’ TRUSS WELDMENT	1
	809263	15’ TRUSS WELDMENT	1
02	808750	HOSE, -8 A8/A8 53”	2
03	814447	ADAP -8ORM -8JICM RUN TEE	1
04	808644	1/4-20”X2” BOLT	2
	808661	1/4”-20 NYLON INSERT NUT	2
05	813708	ADAP -8ORM -8JICM STR	2
06	808796	COUPLER, SET	1
08	814308	ADAP -8ORM -8JICM 90º	2
09	808951	RELIEF VALVE	1
10	808081	HYDRAULIC WINCH	1
11	808612	1/2”-13X1-3/4” GR 8 BOLT	6
12	808665	1/2-13 NYLON INSERT NUT	6
13	808448	ADAP -10ORM -8JICM	2
14	808430	HOSE, -6 A8/A8 18.5”	2
15	51200111	5/16”X2-1/2” BOLT	2
16	808077	PIN, TRUSS WINCH	1
17	808662	5/16”-18 NYLON INSERT NUT	2
18	808797	WINCH SHEAVE	1
19[a]	808933	3/8”X100’ WINCH CABLE *(includes hook and swivel)*	1
19[b]	808825	3/8”X60’ WINCH CABLE *(includes hook and swivel)*	1
20	808618	3/8”X2-1/2” BOLT	2
21	813849	3/8” LOCK WASHER	2
22	808677	WINCH BALL	1
23	808689	PINTLE HOOK	1
24	808619	1/2”-20X1-1/4” GR 8 BOLT	4
25	813805	1/2” LOCK WASHER	4
26[c]	51200485	ADAP -8JICFS -8JICM 90º	2
		-- ITEMS NOT SHOWN--	
--	808499	PLATE, AUGER ADAPTER *(used with auger)*	1

a *Used with 15’ truss booms with winch.*

b *Used with 5’ truss booms with winch.*

c *Not used on all attachments.*

silverhorn.co.uk

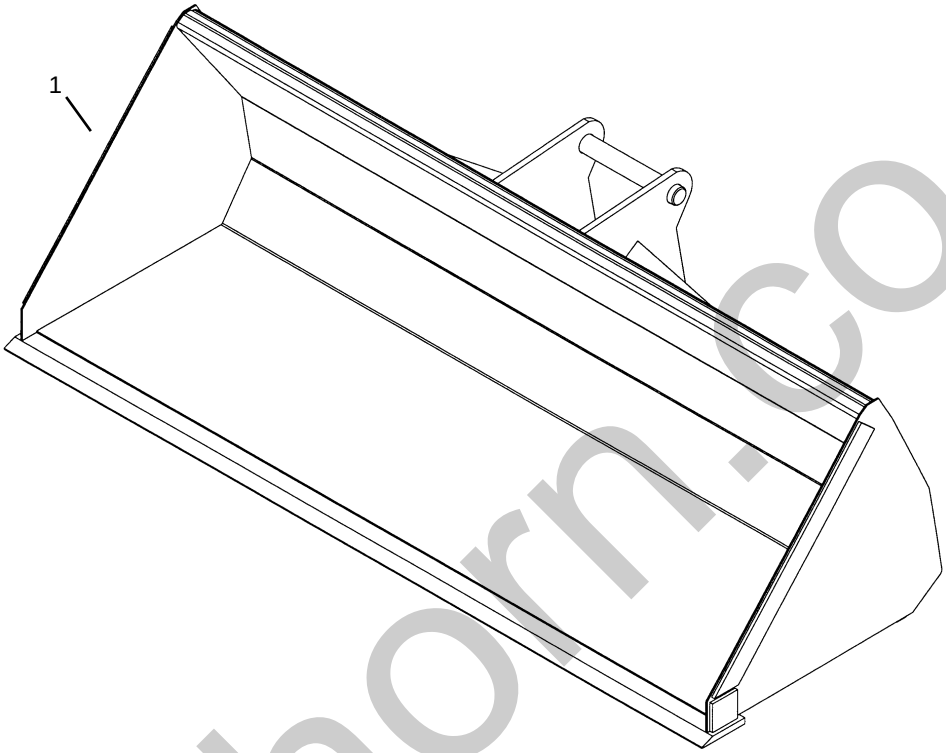

Ref. No.	Part No.	Description	Qty. Req.
01	809264	1.3 CU. YD. BUCKET WELDMNT	1
	808854	CUTTING EDGE 98” *(weld-on)*	1

silverhorn.co.uk

GENERAL INFORMATION

CAUTION

ALWAYS read and follow the safety precautions on decals. Replace decals if they are damaged, or if the unit is repainted. If repainting, BE SURE that all applicable decals are affixed in their proper locations.

Decal locations information is provided to assist in the proper selection and application of new decals, in the event the original decals become damaged or the machine is repainted.

For correct replacement of decals, compare the location illustrations to your machine before starting to refinish the unit. Check off each required decal using the illustration reference number to find the part number, description and quantity in the list. Refer to the appropriate illustrations for replacement locations.

If there is a decal on a part that is to be replaced, be sure that the decal is applied to the replacement part.

NEW DECAL APPLICATION

Before applying the new decals, surfaces must be free from dirt, dust, grease and other foreign material. To apply a solid-formed decal, remove the smaller portion of the decal backing paper and apply this part of the exposed adhesive backing to the clean surface while maintaining proper position and alignment. Slowly peel off the other portion of the backing paper while applying hand pressure to smooth out decal surface. To apply a masked decal, first remove the backing paper. Then, properly orient and position the decal onto the clean mounting surface. After the decal is firmly applied and smoothly pressed down, remove the front covering paper.

PAINT FINISH

Use this list to order paint for refinishing:

808020	One Gallon Red
808021	6 (12-oz. Spray Cans) Red
808043	One Gallon Gun-Metal Gray
808044	6 (12-oz. Spray Cans) Gun-Metal

DECAL KITS

51200001	MT10055XT Telescopic Handler without PWP
51200002	MT10055XT Telescopic Handler with PWP

NOTE: *Decals may be purchased in kits or individually.*

BOOM ATTACHMENT DECALS

808033	WARNING - PINCH POINT
51200486	WARNING - WINCH
51200487	WARNING - TRUSS BOOM TILT

silverhorn.co.uk

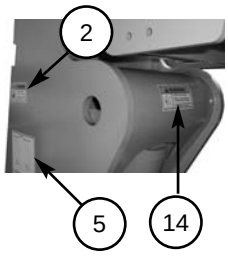

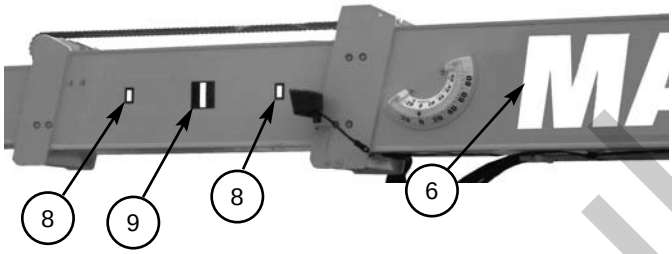

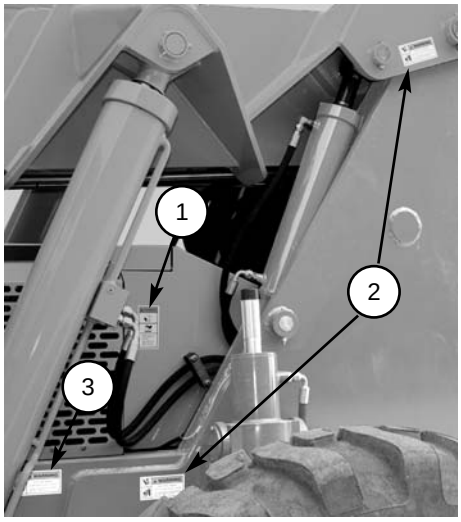

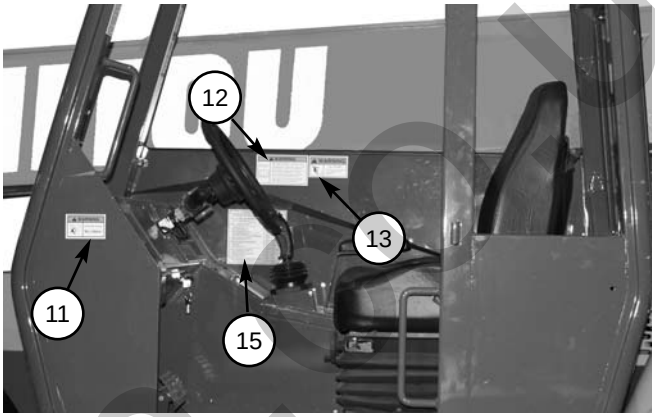

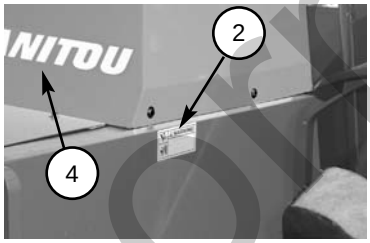

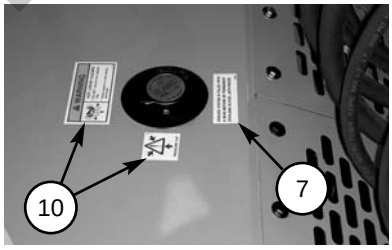

REF. NO.	DESCRIPTION	PART NO.
01	DANGER - HANDS OUT	808036
02	WARNING - PINCH POINT	808033
03	WARNING - JUMP START	808034
04	MANITOU LOGO, SMALL	804768
05	QUICK-ATTACH DIAGRAM	808046
06	MANITOU LOGO, LARGE	806320
07	ANTI-FREEZE	808047
08	HALF ZONE MARKER (5 ea.)	808048
09	NO. “1” EXTENSION MARKER (1 ea.)	808049
	NO. “2” EXTENSION MARKER (1 ea.)	808050
	NO. “3” EXTENSION MARKER (1 ea.)	808051
	NO. “4” EXTENSION MARKER (1 ea.)	808052
	NO. “5” EXTENSION MARKER (1 ea.)	808053
10	COOLANT UNDER PRESSURE	808054
11	WARNING - NO RIDERS	808035
12	OPERATOR MANUAL WARNING	808032
13	DANGER-PERSONNEL INJURY *(units without PWP)*	808031
14	CARRY LOAD LOW	808037
15	LUBE CHART	808024

silvermoon.co.uk

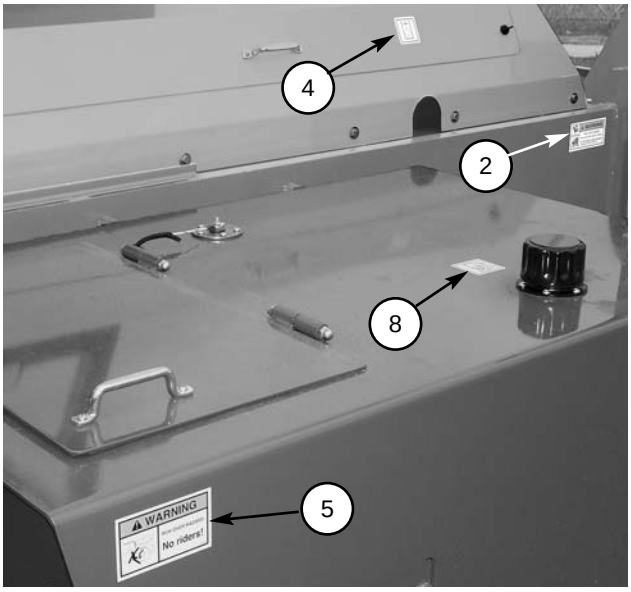

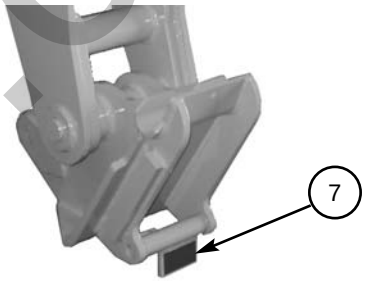

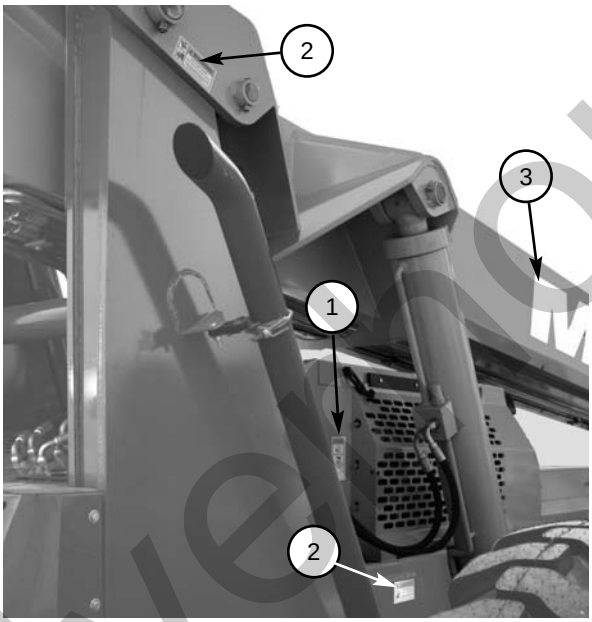

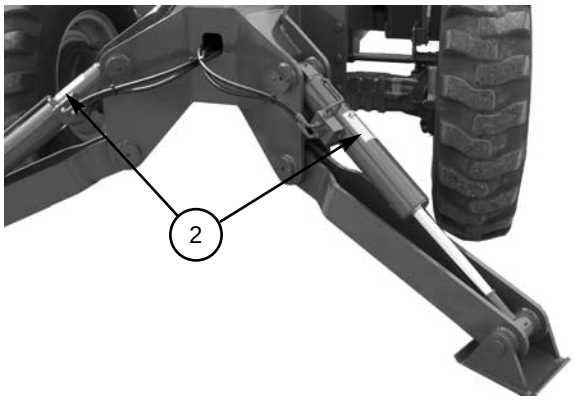

REF. NO.	DESCRIPTION	PART NO.
01	DANGER - HANDS OUT	808036
02	WARNING - PINCH POINT	808033
03	MANISCOPIC, LARGE	806319
04	HYDRAULIC OIL FILL	808057
05	WARNING - NO RIDERS	808035
06	DANGER-PERSONAL INJURY *(units without PWP)*	808031
07	QUICK-ATTACH UNLOCKED	808038
08	DIESEL FUEL	808058

silvernorn.co.uk

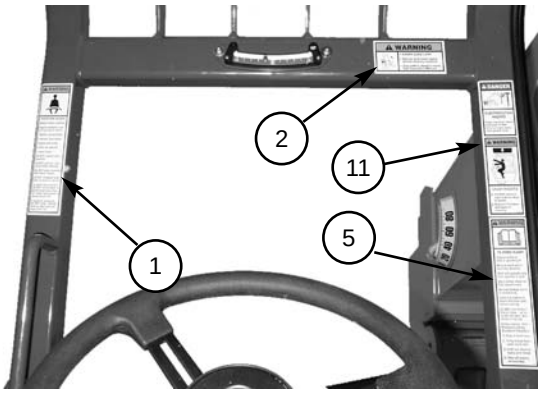

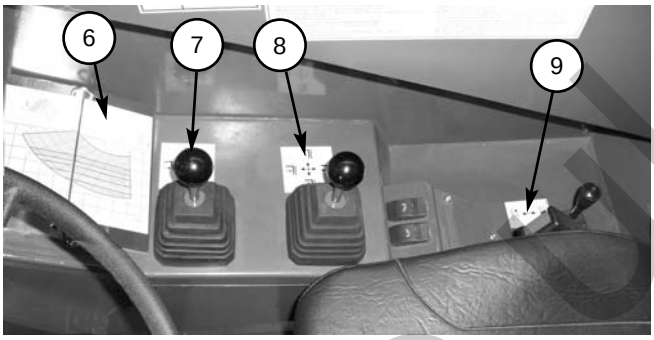

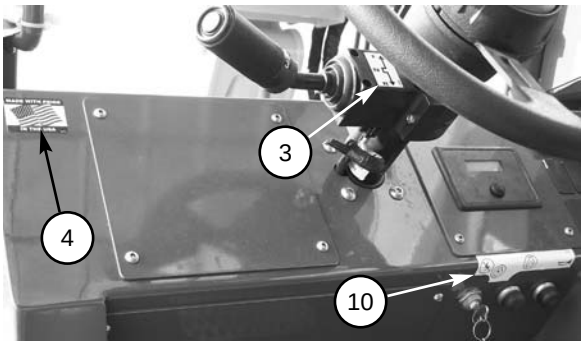

REF. NO.	DESCRIPTION	PART NO.
01	WARNING-TILT HAZARD/GENERAL OPERATOR	808027
02	WARNING - CARRY LOAD LOW	808026
03	F-N-R SHIFT	808059
04	MADE IN USA	808060
05	WARNING - PARK BRAKE/SEAT BELT	808030
06	LOAD ZONE CHARTS	*See Note a*
07	ATTACHMENT TILT/FRAME LEVEL	808061
08	BOOM CONTROL	808062
09	AUXILIARY HYDRAULIC CONTROL *(Optional)*	808064
10	IGNITION/START/HORN	808065
11	DANGER-HIGH VOLTAGE/MOVING PARTS	808029

Note a: See Load Zone Charts section of this manual for individual load zone chart part numbers.

silverhorn.co.uk

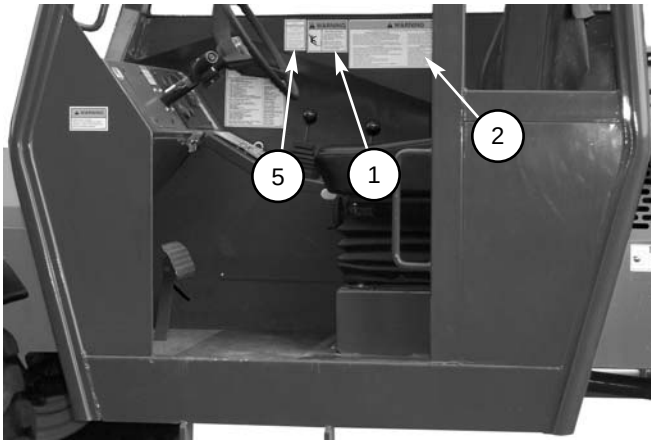

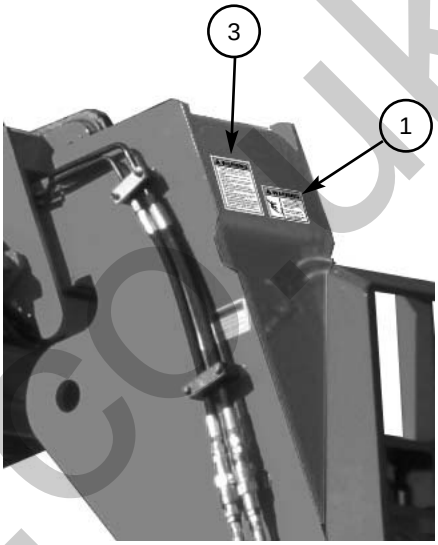

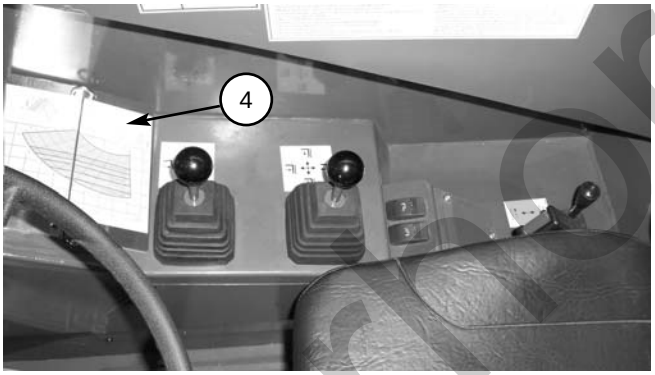

REF. NO.	DESCRIPTION	PART NO.
01	WARNING-PERSONAL LIFT	808039
02	WARNING-WORK PLATFORM RULES	808040
03	PERSONAL LIFT SAFETY RULES	808041
04	PWP LOAD CHART	50380043
05	PWP SWITCH	808042

silverhorn.co.uk

Part No.	Page No.	Ref. No.
50220010	77	01
50220011	77	27
50220012	75	02
50220013	85	01
50220014	85	14
50220014	87	15
50220014	89	14
50220015	85	17
50220016	89	01
50220017	89	24
50220018	89	26
50220019	74	01
50220029	109	22
50220031	103	07
50220031	109	07
50220032	103	07
50220032	109	07
50220033	103	07
50220033	109	07
50220034	103	07
50220034	109	07
50220035	103	07
50220035	109	07
50220036	103	07
50220036	109	07
50220037	103	07
50220037	109	07
50220038	103	07
50220038	109	07
50220039	103	07
50220039	109	07
50220040	103	07
50220040	109	07
50220041	103	07
50220041	109	07
50220042	103	07
50220042	109	07
50220043	103	07
50220043	109	07
50220044	103	07
50220044	109	07
50220045	103	08
50220045	109	08
50220046	103	17
50220046	105	20
50220048	109	16
50220049	103	16
50220050	109	23
50220051	103	26
50220052	109	17
50220053	109	18
50220054	103	21
50220054	109	19
50220055	103	23
50220055	109	21
50220056	105	56
50220056	111	56
50220068	107	07
50220068	113	16
50380043	229	04
51200000	27	03
51200000	7	00
51200001	225	00
51200002	225	00
51200003	9	01
51200004	9	03
51200005	9	19
51200006	9	32
51200007	9	00
51200008	11	15
51200009	11	20
51200010	11	19
51200011	15	00
51200012	17	11
51200012	55	11
51200013	17	22
51200014	19	18
51200015	19	20
51200015	21	00
51200015	21	00
51200016	21	03
51200017	21	04
51200017	35	10
51200017	61	23
51200018	21	05
51200021	21	00
51200021	21	08
51200022	21	23
51200023	21	00
51200023	39	00
51200023	61	00
51200024	61	00
51200026	21	00
51200026	61	00
51200027	21	00
51200028	21	00
51200029	23	13
51200029	47	21
51200030	25	02
51200030	27	15
51200031	25	10
51200032	27	01
51200033	27	01
51200034	27	02
51200035	27	04
51200035	29	10
51200035	31	13
51200036	27	07
51200037	27	08
51200038	27	09
51200039	27	10
51200040	27	11
51200041	27	13
51200042	27	14
51200043	27	17
51200044	27	18
51200045	27	06
51200046	29	02
51200047	29	02
51200047	29	11
51200048	29	03
51200049	29	03
51200050	29	04
51200051	29	04
51200052	29	06
51200053	29	07
51200053	31	09
51200053	49	29
51200053	69	29
51200053	95	05
51200054	29	08
51200055	29	11
51200056	29	12
51200057	29	13
51200058	29	14
51200059	29	15
51200060	29	17
51200060	31	07
51200061	29	00
51200062	31	01
51200062	61	19
51200063	31	03
51200064	31	04
51200065	31	06
51200066	31	10
51200067	31	11
51200068	31	12
51200069	33	01
51200070	33	02
51200071	33	03
51200072	33	06
51200073	33	08
51200074	33	09
51200075	33	12
51200076	33	13
51200077	33	14
51200078	35	06
51200079	37	13
51200080	39	04
51200081	39	05
51200082	39	07
51200084	39	13
51200084	39	14
51200085	39	18
51200086	185	01
51200086	39	21
51200086	41	15
51200087	39	26
51200088	39	30
51200089	41	01
51200090	41	04
51200091	41	08
51200091	41	09
51200091	41	10
51200093	41	14
51200094	41	18
51200095	43	02
51200096	45	01
51200097	45	02
51200098	45	03
51200099	45	04
51200100	45	05
51200101	45	07
51200101	47	07
51200101	49	08
51200102	47	01
51200103	47	05
51200104	47	09
51200105	47	16
51200105	69	25
51200106	47	18
51200107	47	19
51200108	47	20
51200109	47	22
51200110	47	23
51200111	139	20
51200111	223	15
51200111	47	26
51200112	49	01
51200113	49	06
51200114	49	17
51200115	49	19
51200117	49	23
51200118	49	31
51200118	51	24
51200119	51	01
51200119	69	11
51200120	51	25
51200121	51	29
51200122	51	00
51200122	55	00
51200123	145	00
51200123	51	00
51200123	55	10
51200124	53	24
51200125	199	25
51200125	53	00
51200125	55	00
51200126	55	13
51200127	199	01
51200127	55	16
51200128	59	03
51200129	59	04
51200130	61	06
51200131	61	24
51200132	61	25
51200133	63	01
51200134	65	00
51200135	65	15
51200136	65	16
51200137	65	18
51200138	67	01
51200139	67	03
51200140	67	10
51200141	67	10
51200142	67	07

silverhorn.co.uk

Part No.	Page No.	Ref. No.
51200143	69	05
51200144	149	20
51200144	69	12
51200145	69	15
51200146	69	16
51200147	69	19
51200148	69	20
51200149	71	01
51200150	71	02
51200151	71	03
51200152	71	04
51200153	71	05
51200154	71	06
51200155	71	13
51200156	71	14
51200157	71	15
51200158	71	17
51200159	71	18
51200160	73	03
51200161	73	06
51200162	73	08
51200163	73	12
51200164	73	17
51200165	73	22
51200166	74	01
51200168	74	02
51200169	74	12
51200170	74	03
51200170	77	07
51200171	75	01
51200171	79	19
51200173	75	03
51200174	75	04
51200175	75	05
51200176	77	01
51200178	77	12
51200179	77	15
51200179	79	12
51200180	77	16
51200180	79	14
51200181	77	20
51200182	77	22
51200182	90	07
51200183	77	28
51200184	77	29
51200185	77	23
51200187	79	01
51200188	79	04
51200189	79	05
51200190	79	06
51200191	79	07
51200192	79	08
51200193	79	17
51200194	80	02
51200195	80	03
51200196	80	04
51200197	80	05
51200198	80	01
51200199	80	06
51200200	80	08
51200201	80	09
51200202	80	10
51200203	80	11
51200204	81	03
51200205	81	04
51200206	81	13
51200207	81	14
51200208	81	16
51200209	81	22
51200210	81	24
51200211	82	09
51200212	83	01
51200213	83	03
51200214	83	04
51200214	90	03
51200215	83	05
51200216	83	02
51200217	85	01
51200219	85	07
51200219	87	08
51200219	89	06
51200220	85	13
51200220	87	14
51200220	89	13
51200223	85	17
51200224	85	19
51200225	85	20
51200226	85	22
51200227	85	10
51200228	87	01
51200229	89	10
51200230	89	18
51200231	89	20
51200232	87	26
51200232	89	22
51200234	89	26
51200236	89	01
51200238	87	18
51200239	87	20
51200240	87	22
51200241	87	24
51200242	87	25
51200243	87	27
51200244	89	21
51200245	90	01
51200246	90	02
51200247	90	08
51200248	90	09
51200249	90	10
51200250	90	11
51200251	90	12
51200252	90	13
51200253	93	13
51200254	141	17
51200254	143	21
51200254	95	10
51200255	141	15
51200255	143	19
51200255	95	14
51200256	143	18
51200256	95	21
51200257	95	23
51200258	95	23
51200259	95	24
51200260	95	24
51200261	141	14
51200261	95	11
51200262	147	15
51200262	97	08
51200263	147	08
51200263	97	09
51200264	101	01
51200265	101	02
51200266	101	03
51200267	101	05
51200268	101	05
51200269	101	06
51200269	105	31
51200269	111	31
51200270	101	07
51200270	105	30
51200270	111	30
51200271	101	08
51200272	101	08
51200273	101	09
51200274	101	10
51200274	105	53
51200274	107	02
51200275	101	11
51200276	101	12
51200277	101	13
51200278	101	14
51200278	183	01
51200279	101	18
51200280	101	21
51200281	101	22
51200282	101	23
51200283	101	24
51200283	183	02
51200284	103	01
51200284	109	01
51200285	103	02
51200285	109	02
51200286	103	03
51200286	109	03
51200287	103	04
51200287	109	04
51200288	103	04
51200288	109	04
51200289	103	04
51200289	109	04
51200290	103	04
51200290	109	04
51200291	103	05
51200292	103	06
51200292	109	06
51200293	103	07
51200293	109	07
51200294	103	07
51200294	109	07
51200295	103	07
51200295	109	07
51200296	103	07
51200297	103	08
51200297	109	08
51200298	103	09
51200298	109	09
51200299	103	10
51200299	109	10
51200300	103	11
51200300	109	11
51200301	103	12
51200301	109	12
51200302	103	13
51200302	109	13
51200303	103	16
51200304	103	17
51200305	103	17
51200306	103	17
51200307	103	18
51200308	103	19
51200309	103	20
51200310	103	21
51200310	109	19
51200311	103	22
51200311	109	20
51200312	103	23
51200312	109	21
51200313	103	24
51200314	103	25
51200315	103	26
51200316	109	05
51200316	109	07
51200318	105	01
51200319	105	06
51200320	105	13
51200321	105	21
51200321	111	21
51200322	105	32
51200323	105	34
51200323	111	34
51200324	105	35
51200324	111	35
51200325	105	37
51200325	111	37
51200326	105	38
51200326	111	38
51200327	105	39
51200327	111	39
51200328	105	40
51200328	111	40
51200329	105	41
51200329	111	41
51200330	105	43
51200331	105	52
51200332	105	59

sivenhom.co.uk

Part No.	Page No.	Ref. No.
51200332	111	59
51200333	105	62
51200333	111	62
51200334	105	63
51200334	111	63
51200335	105	66
51200335	111	66
51200336	105	67
51200336	111	67
51200337	105	68
51200337	111	68
51200338	105	33
51200338	111	33
51200339	105	46
51200339	111	46
51200340	105	64
51200340	111	64
51200341	111	13
51200342	111	43
51200343	105	47
51200344	105	48
51200344	111	48
51200345	107	01
51200346	107	03
51200348	107	05
51200348	113	14
51200350	107	09
51200351	107	10
51200352	107	11
51200353	107	14
51200353	113	10
51200354	107	15
51200354	113	11
51200355	107	16
51200355	113	12
51200356	107	19
51200357	107	20
51200358	107	23
51200359	107	24
51200360	107	24
51200361	107	24
51200362	109	16
51200363	109	17
51200364	109	18
51200365	109	22
51200366	109	23
51200367	111	01
51200368	111	06
51200369	111	47
51200370	111	52
51200371	113	01
51200372	113	02
51200373	113	03
51200374	113	04
51200375	113	05
51200376	113	13
51200377	113	18
51200378	115	01
51200378	116	01
51200378	117	01
51200379	115	06
51200380	116	03
51200381	116	06
51200382	116	05
51200383	117	05
51200384	119	08
51200385	119	09
51200386	119	27
51200386	123	11
51200386	133	21
51200387	121	13
51200388	131	02
51200389	131	10
51200390	131	11
51200390	149	06
51200390	149	27
51200391	133	01
51200392	133	25
51200393	133	26
51200394	133	30
51200394	135	25
51200394	149	12
51200394	149	17
51200394	149	21
51200394	149	24
51200395	133	23
51200395	135	18
51200396	135	01
51200397	135	20
51200398	135	21
51200399	135	26
51200399	149	18
51200400	137	01
51200400	213	08
51200400	215	33
51200401	137	07
51200401	149	23
51200402	137	08
51200402	149	22
51200403	137	10
51200403	149	15
51200404	137	11
51200404	149	16
51200405	137	12
51200406	137	14
51200406	149	13
51200407	137	16
51200408	139	09
51200408	139	13
51200408	149	11
51200408	149	25
51200409	139	10
51200409	139	14
51200409	149	10
51200409	149	26
51200410	139	11
51200410	149	09
51200411	143	03
51200411	149	05
51200412	143	22
51200413	145	05
51200414	145	07
51200414	147	22
51200414	188	00
51200415	149	28
51200415	195	00
51200416	167	11
51200416	192	02
51200419	188	01
51200420	189	07
51200420	199	00
51200421	189	11
51200422	199	04
51200423	199	04
51200424	199	06
51200425	199	06
51200426	199	09
51200427	199	07
51200428	199	03
51200429	213	01
51200430	213	01
51200431	213	16
51200432	213	18
51200433	213	27
51200434	217	01
51200435	217	04
51200436	217	05
51200437	217	07
51200438	217	16
51200439	217	17
51200440	217	18
51200441	217	19
51200442	217	20
51200443	217	21
51200444	217	22
51200445	217	24
51200446	217	25
51200447	217	26
51200448	217	26
51200449	217	03
51200450	217	08
51200451	217	12
51200452	219	01
51200453	219	02
51200454	219	03
51200455	219	04
51200456	219	05
51200457	219	06
51200458	219	09
51200459	219	10
51200460	219	11
51200461	219	12
51200462	219	13
51200463	219	14
51200464	219	15
51200465	219	16
51200466	219	17
51200467	219	18
51200468	219	19
51200469	219	20
51200470	219	21
51200471	219	22
51200472	219	23
51200473	221	01
51200474	221	04
51200475	221	05
51200476	221	08
51200477	221	12
51200478	221	13
51200479	221	14
51200480	221	26
51200483	221	17
51200484	221	24
51200485	223	26
51200486	225	00
51200487	225	00
804768	226	04
806319	227	03
806320	226	06
808000	7	04
808004	7	05
808004	73	04
808004	81	02
808005	51	34
808005	7	03
808006	51	00
808020	225	00
808021	225	00
808024	226	15
808029	228	11
808031	226	13
808031	227	06
808033	225	00
808036	226	01
808036	227	01
808037	226	14
808038	129	07
808039	229	01
808040	229	02
808041	229	03
808042	229	05
808043	225	00
808044	225	00
808047	226	07
808048	226	08
808049	226	09
808050	226	09
808051	226	09
808052	226	09
808053	226	09
808054	226	10
808057	227	04
808058	227	08
808059	228	03
808060	228	04
808061	228	07

silverthorn.co.uk

Part No.	Page No.	Ref. No.
808062	228	08
808064	135	00
808064	228	09
808065	228	10
808068	7	00
808070	180	05
808071	181	05
808071	182	04
808072	49	21
808073	21	07
808074	21	07
808077	223	16
808078	23	10
808080	215	19
808081	223	10
808082	129	01
808083	19	04
808085	129	13
808086	17	22
808087	49	27
808089	13	20
808090	9	21
808090	9	24
808091	49	02
808092	43	05
808093	13	17
808094	17	19
808095	11	13
808097	17	20
808099	21	02
808099	35	10
808100	51	27
808101	147	01
808101	186	01
808101	35	09
808102	61	03
808104	49	22
808110	51	12
808112	61	12
808113	61	15
808114	73	23
808117	143	04
808117	169	00
808126	145	09
808126	155	07
808126	157	13
808126	159	09
808126	161	13
808126	163	18
808126	165	13
808126	189	01
808127	159	10
808127	161	14
808127	163	16
808127	165	14
808127	191	00
808127	57	02
808130	129	15
808139	149	28
808139	151	01
808139	151	02
808139	155	02
808139	157	02
808139	157	14
808139	159	02
808139	161	02
808139	161	16
808139	163	02
808139	165	02
808139	165	16
808139	195	00
808139	203	00
808139	205	00
808143	137	03
808146	145	03
808146	184	01
808149	131	12
808150	131	13
808152	51	06
808153	51	05
808154	39	08
808164	53	08
808165	95	08
808166	23	00
808175	105	02
808175	111	02
808177	105	57
808177	111	57
808180	105	58
808180	111	58
808180	95	07
808181	105	15
808181	111	15
808182	105	23
808182	111	23
808183	105	19
808183	111	19
808184	105	25
808184	111	25
808186	105	24
808186	111	24
808188	105	14
808188	111	14
808192	105	51
808192	111	51
808194	105	49
808194	111	49
808199	105	36
808199	111	36
808201	105	20
808201	111	20
808202	105	20
808202	111	20
808203	105	20
808203	111	20
808205	105	04
808211	107	21
808212	107	04
808217	107	12
808217	113	08
808218	107	13
808218	113	09
808221	107	17
808222	113	06
808223	107	26
808224	107	25
808232	23	00
808236	9	21
808238	17	03
808239	17	04
808240	11	12
808241	9	03
808242	11	09
808242	9	12
808243	15	07
808244	15	01
808245	9	24
808246	17	02
808247	11	11
808248	9	02
808249	11	10
808249	9	16
808250	15	06
808252	15	03
808253	15	10
808257	9	18
808258	9	17
808259	43	03
808261	9	20
808262	35	05
808263	151	03
808263	155	01
808263	157	01
808263	159	01
808263	161	01
808263	163	01
808263	165	01
808263	201	00
808265	155	09
808265	157	11
808265	159	05
808265	159	08
808265	161	08
808265	161	11
808265	163	06
808265	163	08
808265	165	08
808265	165	11
808266	135	00
808266	195	25
808266	197	00
808267	51	32
808267	55	01
808268	145	00
808268	55	07
808270	151	07
808274	145	15
808274	147	06
808275	145	13
808275	147	24
808276	147	09
808278	97	04
808279	41	12
808279	99	01
808281	41	07
808281	97	03
808282	155	06
808282	155	30
808282	157	12
808282	157	30
808282	159	06
808282	159	30
808282	161	12
808282	161	30
808282	163	07
808282	163	30
808282	165	12
808282	165	30
808282	41	17
808282	51	17
808283	151	06
808283	153	11
808283	153	12
808283	153	13
808283	153	14
808284	151	05
808285	147	07
808289	69	22
808289	73	15
808295	143	06
808295	143	11
808297	141	08
808297	143	27
808302	141	09
808302	143	01
808302	149	03
808303	17	01
808304	141	01
808304	167	00
808305	143	29
808305	192	01
808306	9	09
808307	9	13
808309	43	07
808310	17	21
808313	105	56
808313	111	56
808317	17	12
808318	25	01
808319	13	11
808320	13	09
808321	13	00
808322	61	00
808323	17	15
808324	25	03
808325	25	04

silvermorr.co.uk

Part No.	Page No.	Ref. No.
808326	145	16
808326	159	13
808326	161	17
808326	163	10
808326	165	17
808326	51	15
808327	17	20
808329	91	01
808330	91	02
808331	91	03
808332	91	04
808333	91	05
808335	91	11
808336	91	10
808339	51	33
808340	51	35
808341	23	04
808343	37	13
808344	23	00
808346	169	02
808347	13	00
808348	17	00
808349	189	02
808350	184	02
808351	25	01
808352	25	05
808353	195	20
808353	195	22
808354	195	12
808354	195	15
808355	195	17
808356	195	10
808357	195	04
808358	195	03
808359	195	02
808360	195	07
808360	195	11
808360	195	16
808360	195	21
808360	197	04
808361	195	06
808361	195	09
808361	195	14
808361	195	19
808361	197	02
808362	195	01
808363	195	05
808364	195	08
808365	195	13
808366	195	18
808367	195	25
808369	195	23
808370	195	26
808371	195	00
808372	195	00
808373	195	00
808374	195	00
808375	195	24
808382	195	00
808384	205	01
808385	205	03
808386	201	08
808386	203	07
808386	205	04
808387	201	09
808387	203	08
808387	205	05
808390	205	06
808391	197	03
808392	197	05
808394	21	27
808394	21	28
808395	21	29
808395	21	30
808395	21	31
808395	21	32
808396	23	00
808399	201	02
808399	203	02
808400	201	03
808400	203	03
808401	201	05
808401	203	04
808402	201	06
808402	203	05
808403	201	07
808403	203	06
808404	201	10
808404	203	09
808406	201	01
808406	203	01
808407	192	04
808408	192	05
808409	151	08
808410	51	26
808411	25	06
808411	27	12
808412	25	09
808412	27	05
808413	17	17
808415	215	11
808416	73	13
808419	17	05
808420	11	02
808420	15	09
808421	11	03
808421	33	11
808422	11	06
808422	15	08
808422	17	06
808423	139	05
808423	143	16
808423	175	09
808423	221	06
808424	129	02
808424	143	28
808424	171	01
808424	173	01
808424	175	01
808424	177	14
808424	179	02
808424	181	06
808424	39	10
808424	53	00
808427	65	14
808430	223	14
808431	209	03
808431	211	03
808431	213	24
808431	215	02
808432	35	03
808433	69	28
808433	71	08
808434	61	02
808435	35	01
808436	35	02
808437	21	00
808437	45	13
808438	21	06
808439	49	14
808440	51	13
808448	223	13
808456	215	18
808465	31	05
808465	61	21
808466	39	11
808469	145	03
808469	184	01
808476	180	08
808477	119	23
808477	121	11
808477	123	15
808477	125	18
808478	119	24
808478	121	10
808478	123	16
808478	125	19
808479	13	02
808480	13	18
808481	11	16
808482	9	07
808483	11	05
808483	15	04
808483	17	08
808483	9	08
808484	17	21
808484	9	06
808485	11	08
808486	11	14
808487	11	18
808488	11	17
808489	17	16
808490	11	01
808490	15	02
808490	17	09
808491	11	04
808491	15	05
808491	17	07
808492	9	04
808493	9	04
808494	13	08
808495	11	07
808496	25	08
808497	131	14
808497	135	14
808497	143	08
808497	215	23
808497	221	21
808497	47	15
808497	69	02
808498	116	04
808498	129	12
808498	143	07
808498	21	08
808498	41	11
808498	45	09
808498	47	13
808498	53	01
808498	69	09
808498	9	34
808499	223	00
808500	21	00
808501	180	09
808502	180	01
808503	89	17
808505	23	07
808506	182	06
808513	87	19
808513	89	23
808514	87	21
808514	89	24
808516	101	01
808524	103	14
808524	109	14
808525	103	15
808525	105	16
808525	109	15
808525	111	16
808535	23	00
808538	105	03
808538	111	03
808539	105	05
808540	105	12
808540	111	12
808541	105	10
808541	111	10
808542	105	11
808542	111	11
808543	101	19
808543	107	06
808543	113	15
808543	95	19
808544	45	08
808544	47	08
808544	49	08
808545	147	10

silverhorn.co.uk

Part No.	Page No.	Ref. No.
808545	23	06
808545	23	12
808545	33	04
808545	41	13
808545	47	03
808545	53	26
808545	9	05
808552	95	20
808553	95	16
808554	95	17
808555	117	03
808555	147	23
808555	21	08
808555	215	28
808555	37	09
808555	39	03
808555	47	11
808555	65	08
808555	69	10
808555	9	33
808558	23	09
808560	13	19
808561	13	04
808562	13	03
808563	13	15
808564	13	12
808565	13	06
808566	13	11
808568	13	13
808569	13	10
808570	13	05
808571	13	14
808572	13	16
808573	13	01
808574	13	07
808576	23	00
808579	182	03
808580	182	02
808581	182	01
808583	141	16
808583	143	20
808583	53	07
808583	95	13
808584	115	34
808584	119	32
808584	125	05
808584	127	11
808585	186	02
808586	35	04
808587	115	07
808588	143	26
808588	189	10
808589	143	25
808589	189	09
808589	217	13
808589	9	14
808595	39	06
808595	67	08
808598	37	04
808600	11	00
808600	17	21
808600	23	06
808600	23	11
808600	25	07
808600	27	16
808600	53	25
808600	9	15
808601	47	04
808602	39	28
808604	39	02
808607	95	02
808611	141	03
808612	223	11
808612	49	03
808613	61	13
808615	61	14
808615	73	16
808616	211	04
808618	221	02
808618	223	20
808619	115	27
808619	119	07
808619	223	24
808620	53	06
808622	215	14
808622	217	14
808622	221	10
808623	73	11
808624	21	01
808624	35	10
808625	37	05
808626	211	02
808626	217	23
808627	147	14
808628	215	22
808628	221	16
808629	145	03
808630	39	12
808632	39	09
808633	129	06
808635	213	22
808638	213	17
808641	73	09
808642	131	15
808642	215	12
808643	95	06
808644	223	04
808645	217	09
808649	129	17
808652	209	04
808652	213	25
808652	215	03
808655	65	17
808659	65	09
808661	17	21
808661	215	13
808661	221	07
808661	223	04
808661	49	20
808661	61	04
808662	131	06
808662	133	07
808662	135	07
808662	211	12
808662	223	17
808662	41	05
808663	115	12
808663	119	20
808663	121	05
808663	123	18
808663	131	03
808663	133	22
808663	137	02
808663	139	01
808663	141	04
808663	213	09
808663	215	32
808663	221	03
808663	23	03
808663	37	13
808663	39	17
808663	53	20
808663	55	12
808663	67	04
808663	67	07
808663	9	35
808664	61	18
808664	73	19
808665	116	07
808665	129	16
808665	209	05
808665	213	23
808665	215	01
808665	223	12
808665	49	04
808666	9	11
808667	39	27
808667	49	28
808667	9	10
808667	9	23
808669	115	05
808671	116	02
808671	117	06
808671	139	17
808671	39	27
808671	45	11
808671	47	17
808672	9	00
808674	39	15
808677	223	22
808678	67	05
808678	67	11
808686	49	25
808687	213	27
808688	213	04
808689	223	23
808690	51	00
808692	119	16
808693	115	16
808693	119	12
808693	121	14
808693	123	05
808693	125	21
808693	127	15
808693	213	19
808695	213	10
808696	115	18
808696	119	10
808696	121	03
808696	123	03
808696	125	03
808696	127	04
808701	115	15
808701	119	14
808701	121	15
808701	123	06
808701	125	22
808701	127	13
808702	115	14
808702	119	13
808702	121	16
808702	123	07
808702	125	23
808702	127	14
808704	189	07
808704	199	00
808707	21	00
808708	141	10
808708	167	02
808709	137	04
808709	175	03
808710	211	18
808710	215	07
808710	221	18
808711	39	01
808712	141	05
808713	145	01
808713	51	14
808715	159	12
808715	161	15
808715	163	12
808715	163	13
808715	165	15
808716	147	05
808716	51	18
808718	49	13
808720	181	02
808720	215	16
808720	221	09
808723	9	26
808727	133	09
808727	135	09
808727	141	11
808727	143	14
808727	211	09
808727	215	24

silvernorn.co.uk

Part No.	Page No.	Ref. No.
808728	211	11
808728	215	25
808729	135	13
808729	139	19
808729	47	25
808730	135	12
808730	139	18
808730	47	24
808731	49	18
808733	43	00
808733	9	00
808734	9	27
808735	21	00
808735	23	00
808737	215	34
808738	181	00
808738	215	17
808739	215	10
808740	215	30
808741	215	15
808743	180	02
808744	61	16
808744	73	21
808746	119	17
808747	115	21
808747	123	09
808749	61	17
808749	73	20
808750	213	07
808750	223	02
808751	145	08
808756	141	02
808756	167	08
808763	147	04
808764	209	02
808764	213	26
808764	215	04
808765	67	06
808774	45	06
808774	47	06
808774	49	08
808775	47	10
808777	67	04
808782	65	10
808783	53	19
808784	53	18
808786	129	03
808787	129	04
808788	51	10
808789	51	11
808791	213	14
808792	213	03
808793	51	23
808794	209	02
808794	213	26
808796	135	17
808796	211	13
808796	213	05
808796	215	06
808796	217	27
808796	221	19
808796	223	06
808797	223	18
808798	61	22
808799	115	08
808800	115	03
808801	47	02
808802	9	22
808803	141	06
808803	213	11
808803	213	13
808804	97	05
808804	99	04
808808	21	00
808808	21	34
808810	129	18
808811	129	05
808819	125	02
808819	127	03
808822	211	05
808823	211	08
808824	211	06
808825	223	19
808826	211	20
808827	215	08
808828	73	05
808831	175	10
808834	182	00
808834	211	16
808835	37	12
808844	31	02
808846	61	07
808850	153	05
808850	153	06
808850	153	17
808850	153	18
808850	157	07
808850	157	09
808850	161	07
808850	161	09
808850	165	07
808850	165	09
808851	53	09
808851	53	10
808851	53	11
808851	53	12
808851	55	03
808851	55	04
808851	55	08
808851	55	09
808852	155	40
808852	157	40
808852	159	40
808852	161	40
808852	163	40
808852	165	40
808852	55	19
808857	177	09
808858	139	16
808858	143	17
808858	169	01
808858	171	10
808858	179	07
808858	53	04
808859	133	18
808859	177	00
808860	137	05
808860	175	00
808862	9	23
808871	133	20
808873	129	11
808873	53	05
808874	53	02
808875	129	10
808876	95	12
808877	147	11
808877	187	00
808878	143	10
808878	169	05
808879	143	09
808880	133	29
808880	135	24
808880	217	11
808881	133	28
808881	135	23
808881	217	10
808882	155	05
808882	155	10
808882	157	08
808882	157	10
808882	159	07
808882	161	10
808882	163	05
808882	165	10
808882	97	06
808882	97	10
808885	147	16
808885	147	17
808885	99	06
808885	99	07
808889	23	01
808890	115	09
808891	17	21
808892	21	21
808892	21	22
808896	49	26
808897	23	06
808898	37	07
808899	37	06
808900	49	07
808901	23	00
808902	115	02
808903	173	09
808905	41	02
808907	171	09
808907	177	10
808908	53	17
808909	53	16
808910	179	00
808911	179	03
808911	53	15
808912	53	03
808913	61	00
808914	37	02
808915	115	20
808916	115	11
808918	180	00
808918	213	12
808919	23	08
808920	215	31
808921	19	06
808922	19	03
808923	19	13
808923	19	14
808924	19	09
808925	19	12
808925	61	00
808926	19	07
808927	19	08
808928	19	05
808929	116	08
808932	121	06
808932	123	17
808933	223	19
808934	15	00
808935	57	01
808936	23	10
808937	215	26
808937	221	23
808938	19	10
808938	57	00
808945	57	05
808946	57	04
808947	71	10
808949	117	02
808951	223	09
808953	77	02
808954	90	06
808955	171	09
808955	177	10
808955	180	08
808959	188	06
808960	180	07
808961	180	04
808966	77	06
808967	77	09
808968	77	05
808971	74	14
808972	74	16
808973	79	21
808974	74	15
808976	79	23
808977	79	22
808978	79	24
808980	79	20
808981	79	25
808984	81	10
808985	81	08
808986	81	09
808989	81	12

silverhorn.co.uk

Part No.	Page No.	Ref. No.
808990	81	01
808991	81	06
808993	82	02
808994	82	01
808995	82	04
808996	82	03
808997	82	05
808999	85	16
808999	87	17
808999	89	16
809000	85	15
809000	87	16
809000	89	15
809001	85	08
809001	87	09
809001	89	07
809003	85	14
809003	87	15
809003	89	14
809005	85	12
809005	87	13
809005	89	12
809006	85	11
809006	87	12
809006	89	11
809007	85	09
809007	87	10
809007	89	08
809008	85	05
809008	87	06
809008	89	04
809009	85	06
809009	87	07
809009	89	05
809011	77	27
809012	85	02
809012	87	02
809012	89	02
809013	77	25
809014	85	18
809014	85	21
809014	89	19
809016	74	13
809020	83	06
809021	77	24
809021	90	05
809022	74	17
809024	89	27
809029	90	04
809032	93	01
809033	93	02
809034	93	03
809035	93	04
809036	93	05
809037	93	12
809038	93	10
809039	93	09
809040	93	08
809041	93	07
809042	93	06
809044	92	03
809045	92	06
809046	101	20
809046	105	18
809046	111	18
809046	95	18
809048	105	09
809048	111	09
809049	105	07
809049	111	07
809050	101	04
809050	105	08
809050	111	08
809059	167	01
809060	167	12
809061	167	05
809062	167	10
809067	167	03
809067	175	04
809068	167	06
809071	77	13
809072	77	14
809074	79	02
809075	79	03
809078	74	10
809079	80	12
809080	80	07
809084	81	11
809087	81	05
809087	81	07
809089	93	15
809090	93	14
809091	93	11
809092	87	11
809092	89	09
809095	77	03
809096	74	09
809096	79	11
809096	81	17
809097	92	05
809098	89	03
809099	79	10
809101	180	03
809106	49	07
809107	73	10
809109	49	33
809109	61	00
809112	51	04
809114	77	04
809115	74	05
809115	79	16
809116	85	03
809117	87	03
809118	74	03
809118	77	07
809119	74	06
809119	77	18
809122	77	17
809122	79	13
809123	77	19
809123	79	18
809128	167	07
809130	35	06
809131	67	02
809132	87	23
809132	89	25
809133	92	04
809134	177	06
809135	171	04
809135	177	03
809136	167	04
809136	171	08
809136	175	06
809137	175	07
809137	179	05
809138	175	02
809139	175	05
809140	171	07
809140	173	07
809140	175	11
809140	177	08
809146	177	13
809147	177	07
809148	177	02
809149	177	05
809150	129	14
809150	177	01
809151	189	05
809151	191	02
809152	189	06
809152	191	04
809153	189	06
809153	191	03
809153	191	04
809154	192	05
809155	171	12
809155	177	12
809155	179	08
809155	192	06
809156	189	03
809156	199	02
809157	189	03
809157	199	02
809159	169	03
809160	169	04
809161	169	08
809162	173	09
809163	181	07
809164	95	03
809165	25	05
809166	179	09
809167	179	11
809168	179	01
809169	179	04
809170	51	07
809174	189	07
809174	199	05
809174	55	17
809177	9	22
809178	9	28
809179	9	29
809180	11	00
809181	11	00
809182	13	00
809183	13	00
809184	17	10
809185	17	21
809186	17	21
809187	17	22
809188	17	22
809190	21	24
809190	21	25
809190	21	26
809193	25	00
809195	37	10
809196	43	01
809196	95	15
809198	43	04
809198	95	09
809200	143	02
809200	149	04
809201	143	24
809202	51	00
809208	67	09
809212	73	18
809213	74	04
809213	77	11
809213	79	15
809214	74	08
809215	74	07
809216	74	11
809217	77	03
809218	79	09
809219	77	10
809221	77	21
809221	81	23
809225	81	15
809227	82	06
809228	82	07
809229	77	26
809234	95	01
809234	95	22
809239	113	07
809248	209	01
809249	209	01
809250	211	01
809251	211	10
809252	211	15
809253	211	17
809254	211	19
809257	213	02
809258	215	05
809259	215	27
809260	215	35
809263	223	01
809265	145	02
809267	167	11
809267	192	02
809269	181	01
809270	181	03

silvermorn.co.uk

Part No.	Page No.	Ref. No.
809272	187	00
809273	189	08
809274	201	04
809275	205	02
809276	211	08
809277	191	03
809294	49	23
809295	49	22
809296	49	22
809297	49	23
809308	65	12
809365	107	27
809371	181	04
809381	65	02
809382	65	19
809404	223	01
809453	107	18
809493	131	07
809493	133	08
809493	135	08
809503	49	16
809504	121	02
809514	137	13
809528	95	00
809540	145	11
809540	149	01
809540	69	23
809540	73	02
809565	49	11
809566	49	11
809567	49	12
809694	19	00
809726	59	01
809727	59	02
809728	59	05
809729	59	06
809730	59	00
809731	59	00
809732	153	08
809732	193	00
809733	193	01
809734	193	01
809735	193	02
809736	193	03
809737	193	03
809738	193	00
809739	193	00
809742	61	01
809763	57	00
809764	153	03
809764	163	09
809764	165	20
809765	153	09
809765	153	10
809765	153	15
809765	153	16
809766	153	01
809766	163	11
809766	165	18
809770	57	03
809771	47	05
809772	49	05
809773	153	02
809773	163	14
809773	165	19
809814	209	02
809823	7	07
809824	7	08
809825	65	03
809825	7	01
809826	65	04
809826	7	02
809827	7	09
809828	7	10
809830	61	10
809831	65	11
809832	69	26
809832	71	07
809834	71	09
809835	71	16
809882	119	22
809882	121	12
809882	123	14
809882	125	17
813367	33	15
813373	23	00
813374	21	00
813379	19	11
813379	21	00
813386	133	06
813386	135	06
813433	17	32
813446	19	19
813462	53	22
813464	53	23
813465	19	21
813465	21	00
813465	21	35
813466	21	00
813466	61	00
813469	9	26
813497	61	20
813514	33	10
813516	29	01
813516	33	07
813517	33	05
813531	45	12
813531	55	15
813531	69	08
813534	29	09
813534	63	08
813535	63	04
813536	63	02
813537	63	02
813538	63	03
813539	63	07
813540	63	05
813541	63	06
813542	63	09
813549	35	08
813550	147	02
813550	147	19
813551	97	07
813551	99	08
813560	35	07
813574	123	08
813574	127	12
813574	29	18
813574	31	08
813574	37	13
813574	67	07
813591	213	15
813591	23	02
813591	51	22
813591	67	04
813591	67	07
813591	9	36
813596	145	12
813596	147	13
813596	151	04
813596	155	03
813596	157	03
813596	159	03
813596	161	03
813596	163	03
813596	165	03
813596	217	15
813596	221	22
813596	51	20
813596	55	18
813597	147	12
813597	155	08
813597	157	06
813597	159	11
813597	161	06
813597	163	17
813597	165	06
813597	215	21
813597	221	11
813597	51	19
813598	141	12
813598	143	12
813598	37	11
813598	47	14
813598	51	08
813598	69	01
813607	39	25
813608	37	01
813609	37	03
813610	37	08
813610	39	29
813610	51	09
813610	55	14
813615	37	14
813616	37	15
813617	37	16
813619	58	03
813620	58	01
813621	58	02
813622	58	00
813623	59	08
813625	59	07
813656	17	14
813664	131	01
813664	139	12
813664	145	06
813664	149	08
813677	115	13
813677	119	15
813677	121	17
813677	125	24
813677	213	21
813677	29	05
813677	51	21
813679	41	16
813679	51	37
813697	115	28
813697	119	11
813697	121	04
813697	123	10
813697	125	04
813697	127	05
813697	37	13
813697	9	37
813699	49	34
813699	61	00
813704	73	14
813708	137	09
813708	143	05
813708	147	03
813708	213	06
813708	223	05
813708	53	13
813711	119	18
813711	121	07
813711	123	19
813711	131	05
813711	133	19
813711	139	02
813711	221	25
813711	53	21
813713	115	10
813713	29	16
813713	39	16
813713	43	06
813713	51	28
813713	67	04
813728	69	06
813729	115	04
813729	45	10
813729	47	12
813729	69	07
813737	69	27
813738	69	04
813739	69	03
813741	69	24

silverhorn.co.uk

Part No.	Page No.	Ref. No.
813743	149	19
813743	69	18
813746	145	04
813746	149	02
813746	69	21
813761	71	11
813765	71	12
813766	71	18
813776	65	13
813777	65	06
813805	115	26
813805	119	06
813805	223	25
813839	51	31
813841	131	16
813841	149	07
813844	55	02
813849	213	20
813849	223	21
813849	73	13
813850	69	17
814008	77	11
814021	95	01
814025	95	04
814026	95	04
814206	117	04
814210	115	19
814210	121	01
814210	123	04
814211	115	17
814211	121	18
814211	123	02
814211	127	06
814214	115	22
814215	115	24
814215	119	04
814216	115	23
814216	119	03
814217	115	30
814217	115	31
814217	119	29
814217	119	31
814217	125	07
814217	125	08
814217	127	08
814217	127	09
814218	115	32
814218	119	30
814218	125	06
814218	127	10
814219	115	29
814219	125	29
814220	115	25
814220	119	02
814220	125	25
814220	127	02
814223	119	25
814223	121	09
814223	123	13
814223	125	16
814226	119	05
814227	119	19
814228	119	21
814229	119	26
814229	121	08
814229	123	12
814229	125	15
814231	119	28
814231	127	28
814232	123	01
814232	125	26
814233	125	20
814233	127	07
814234	125	27
814235	125	01
814235	127	01
814236	127	16
814262	137	15
814262	149	14
814272	115	33
814273	119	01
814273	121	19
814290	139	06
814290	171	00
814291	133	17
814291	139	08
814296	139	04
814296	171	03
814297	139	03
814300	41	03
814303	139	15
814308	137	06
814308	141	07
814308	143	23
814308	223	08
814308	55	05
814322	131	08
814323	135	16
814326	145	10
814326	73	24
814329	133	15
814340	133	16
814344	133	27
814344	135	22
814344	65	07
814345	133	05
814345	135	05
814346	133	10
814346	135	10
814347	133	13
814347	135	11
814348	133	11
814349	133	12
814364	133	24
814364	135	19
814369	133	03
814370	133	04
814371	133	02
814371	135	02
814372	125	09
814373	125	10
814374	125	11
814375	125	12
814376	125	13
814377	125	14
814382	135	15
814389	133	24
814389	135	19
814406	131	17
814408	131	04
814409	131	18
814409	173	00
814414	131	09
814420	135	04
814421	135	03
814429	51	30
814431	153	07
814447	145	14
814447	147	18
814447	223	03
814450	147	21
814450	153	04
814461	155	04
814461	157	04
814461	159	04
814461	161	04
814461	163	04
814461	165	04
814461	215	20
814461	51	36
814461	97	02
814461	99	05
814479	41	06
814495	69	14
814496	135	27
814496	197	01
814501	147	20
814501	51	16
814501	99	02
814506	157	05
814506	161	05
814506	165	05
814506	97	01
814506	99	03
814513	55	06
814517	49	32
814522	141	13
814522	143	15
814532	187	01
814584	169	07
814586	171	02
814586	171	05
814591	171	11
814593	171	06
814598	175	08
814598	179	06
814603	177	04
814608	173	02
814610	173	03
814611	173	04
814613	173	05
814614	173	06
814615	173	08
814616	173	11
814617	221	15
814639	209	01
814650	211	07
814650	217	02
814679	49	24

silvernorn.co.uk

PAGE

A

A/C Compressor 29
A/C Dryer 29
A/C Fan 27
Access Cover 51
Actuator 217, 219
Air Cleaner Assembly 65
Air Filter 7, 65
Attachment Fork 207
Auxiliary Hydraulics Work Section 197
Axle 95
Axle Bleed Screw 107, 113
Axle Case 105, 111

B

Backup Alarm 23
Battery 49
Bellows, Seat 37
Bevel Gear Set 103, 109
Bezel, Rubber 23
Bleed Screw, Axle 107, 113
Blower Motor, Heat-A/C 25
Boom Angle Indicator Plate 115
Boom Chain 115, 119, 125, 127
Boom Extend Cylinder 131
Boom Lift Cylinder 139, 171
Boom Light Bracket 115
Boom, Inner 127
Boom, Intermediate-1st 119, 121
Boom, Intermediate-2nd 125, 127
Boom, Outer 115, 116, 117
Boot 203, 205
Bottle, Dual-Pump Washer 13
Bracket, Air Intake 65
Bracket, Alternator 61
Bracket, Brake Booster 39
Bracket, Brake Module 21
Bracket, Hose Support 51
Bracket, Pipe Support 71
Bracket, Pressure Switch 41
Brake Cylinder, Booster 39, 41, 185
Brake Disc 107, 113
Brake Lever Assembly 39
Bulb Seal, Door Frame 17
Bulb Seal, Front Glass 11
Bulb Seal, Left Glass 15
Bulb Seal, Rear Glass 11

silverhorn.co.uk

PAGE

Bulb Seal, Rear Window 9
Bumper, Door 17

C

Cab 9
Cab Door 17
Cable, Neg Battery 49
Cable, Pos Battery 49
CAC Lower Tube 71
Can / Terminate Receptacle 19, 21
Cap, Fuel 49
Cap, Hydraulic Fill 51
Cap, Steering Wheel 35
Carriage, Attachment 209, 213, 215
Catalytic Purifier 67
Chain, Leaf 115, 125
Charge Air Cooler 71
Charge Pump, Transmission 81
Clear Cover, Diode Pack 23
Clip, Window 9
Cold Control Switch 27
Cold Start Bypass 69
Column, Steering 35
Compressor, A/C 63
Condenser 29, 33
Control, Temperature 25
Controller, Auxiliary Hydraulics 151, 157, 161, 165, 205
Controller, Lift/Extend 151, 155, 157, 159, 161, 163, 165, 203
Controller, Tilt/Level 151, 155, 157, 159, 161, 163, 165, 201
Converter Housing 74
Cooler, Hydraulic 71
Cooler, Transmission 71
Coupler Set 217, 221, 223
Coupler, Test 189, 199, 215
Cover, A/C Hoses 33
Cover, Access 45
Cover, Boom Side 117
Cover, Condenser Housing 33
Cover, Electronic Throttle 39
Cover, Front Frame 45
Cover, Fuse Panel 9
Cover, Hydraulic Controllers 9
Cover, Main Valve 47
Cover, Rear Boom 116
Cover, Wiper Motor 13
Cylinder, Boom Extend 131, 173
Cylinder, Boom Lift 139, 171

silverhorn.co.uk

PAGE

Cylinder, Fork-Shift 182, 211
Cylinder, Frame Level 141, 167
Cylinder, Frame Stabilizing 143, 169
Cylinder, Grapple 221
Cylinder, Outrigger 53, 179
Cylinder, Rotating-Carriage 180, 213
Cylinder, Slave 137, 175
Cylinder, Stabilizer 143, 169
Cylinder, Steer 101, 183
Cylinder, Swing-Carriage 215
Cylinder, Tilt 133, 177

D

Decal 129, 225, 226, 227, 228
Decal, Auxiliary Control 135
Decal, A/C Heater Control 27
Decal, Door Safety Pin 219
Decal, Fall Hazard 219
Decal, Heat Control 25
Decal, Platform Rules 219
Differential 103, 107, 109, 113
Diode Pack 21
Diode Wire 19, 21
Dipstick, Transmission 77
Display, Can & Instruments 19
Driveshaft, Front 73
Driveshaft, Rear 73
Dynattach® Weldment 129

E

ECU Interface Wire Harness 21
ECU Mount 61
Engine 61
Engine Block Heater 61
Engine Mount 61
Engine Oil Filter 7
E-Stop Remote System 58
Ether Kit 61
Evaporator/Heater Coil 27, 29, 31
Expansion Valve 27

F

Fan Belt 61, 63
Fan Guard 69
Fan Shroud 69
Fan, Suction 69

silverhorn.co.uk

PAGE

Fender 95
Filter Cover 27
Filter, Air 65
Filter, Cab Air 7, 27
Filter, Fuel 7
Filter, Hydraulic 7, 51
Filter, Transmission Oil 7, 73, 81
Flow Divider Valve 145, 188, 189
Fork, Attachment 207
Forkshaft Bar 213, 215, 217
Forkshaft Washer 209, 211, 213, 215
Fork-Shift Carriage 211
Fork-Shift Cylinder 182, 211
Frame Level Cylinder 141, 167
Frame Level Indicator 65
Frame Level Mount 98, 141
Frame Stabilizing Cylinder 143
Frame Stabilizing Valve 192
Fuel Filter 7
Fuel Filter Mount 61
Fuse 21
Fuse Box 21

G

Glass Mount 17
Glass, Front 11
Glass, Left Rear 15
Glass, Lower Door 17
Glass, Rear 9, 11
Glass, Right 9
Glass, Top 15
Glass, Upper Door 17
Grapple Cylinder 221
Grill, Defroster 25
Grill, Vent 27
Ground Strap 21
Guide, Engine Panel 47

H

Handle 17, 45, 47
Head Light 23
Heater Assembly 25
Heater Hose Clamp 25
Heater-A/C Solenoid 31
Hinge, Front Window 11
Hinge, Plastic (Rear Window) 11
Hold Open, L-Style 11

silverhorn.co.uk

PAGE

Hood, Front 45
Hood, Rear 47
Hood, Top 47
Horn 21, 45
Hose, Charge Air 71
Hose, Fuel 49, 61
Hose, Heater 31
Hose, Lower Radiator 71
Hose, Overflow 27
Hose, Upper Radiator 71
HVAC Assembly 27
Hydraulic Filter 7, 51
Hydraulic Filter Assembly 51
Hydraulic Main Valve 195
Hydraulic Pump 145, 184
Hydraulic Tank 51
Hydraulic Valve, Main 149
Hydraulic Winch 223

I

Inclinometer - Angle Indicator 115
Indicator, Frame Level 9
Inner Boom 127
Intermediate Boom, 1st- 119, 121
Intermediate Boom, 2nd- 123, 125

K

Key 17, 21
Knob 27, 201, 203

L

Lanyard 59
Leaf Chain 115, 119, 125, 127
Level Sensor 57
Light, Brake/Turn 23
Light, Halogen Backup 23
Load Chart Plate 9
Log Carriage 221
Log Grapple Cylinder 221
Louver 25, 27

M

Magnetic Plug 101, 105, 111
Main Valve, Hydraulic 195
Manifold, Brake Line 41
Manifold, Flow Divider 189

silverhorn.co.uk

PAGE

Manifold, Joystick Relief 57, 155, 157, 159, 161, 163, 165, 191
Manifold, PWP/WPS 57, 159, 161, 163, 165, 191
Manifold, Radio Remote 153
Manifold, Stabilizing Cylinder 143
Mirror 49
Module, A/C Control 27
Module, Brake Warning 21
Module, F-N-R Shifter 21, 35
Motor, Steer 35
Mount, Condenser Coil 33
Mount, Dryer / Valve 29, 31
Mount, Engine 61
Mount, Outrigger Switch 53
Mount, Outrigger Valve 55
Mount, Rear Glass 9
Mount, Rear Window Latch 11
Mount, Relay 61
Mount, Seat Belt 37
Mount, Top Hood 47, 69
Muffler 67

O

Oil-Line Tube Assembly 167
Outer Boom 115, 116, 117
Outrigger Cylinder 179
Outrigger Valve 199

P

Pad, Brake Pedal 39
Paint 225
Panel, Dash 19
Panel, Dash Cover 9
Panel, Engine 47
Panel, Front 219
Panel, Heater 9
Panel, HVAC Control 27
Panel, Left Door 219
Panel, Rear 219
Panel, Right Door 219
Panel, Side Radiator 47
Pipe, Outlet Exhaust 67
Plug 74, 75, 77, 79, 95, 101, 105, 107, 111, 113, 195
Plug, Magnetic 77
Plug, Speed Sensor 77
PO Check Valve 179
Pre-Cleaner, Air 65

silverhorn.co.uk

PAGE

Pressure Switch 41, 58
Priority Flow Divider 188
Priority Valve 145, 147
Proportional Pressure Valve 193, 199
PWP/WPS Control Module 57

Q

Quick Coupler Set 135, 211, 213

R

Radiator 71
Radiator Cap 69, 71
Radiator/Cooler Assembly 71
Radio Remote 59
Radio Remote Valve 193
Rectifier Pack 27
Regulator Valve 81
Relay 21, 27, 33
Relay, Engine Starter 61
Remote Receiver 59
Remote Transmitter 59
Resistor Block 25
Ring Gear 105, 111
Rotating-Carriage Cylinder 180, 213

S

Seat 37
Seat Belt 37
Sediment Bowl 7
Sender, Fuel Level 49
Sender, Temperature 73
Shifter 35
Shock, Suspension Seat 37
Shut-Off, Manual Water 31, 61
Shuttle Valve 193
Sight Glass 51
Slave Cylinder 137, 175
Speed Sensor 77
Stabilizing Cylinder 143, 169
Steer Cylinder 101, 183
Steer Motor 35, 147, 186
Steer Select Valve 187
Steering Wheel 35
Strainer, Hydraulic Oil 51
Striker, Door 17
Strobe Light 21

silverhorn.co.uk

PAGE

Swing Carriage 215, 217
Swing-Carriage Cylinder 181, 215
Switch Hole Plug 19
Switch, Binary 29
Switch, Clutch Cut-Out 19
Switch, Engine Fault 19
Switch, E-Stop 59
Switch, Ether 61
Switch, Ether 19
Switch, Hazard Lights 19
Switch, Ignition 21
Switch, Left Outrigger 53
Switch, Lights 19
Switch, Park Brake 19
Switch, Proximity 116
Switch, Push Button 21
Switch, PWP/WPS 19, 57
Switch, Right Outrigger 53
Switch, Steer Mode 19
Switch, Strobe Light 19, 21
Switch, Toggle 59
Switch, Turn Signals 19
Switch, Variable Speed 25, 27
Switch, Wiper/Washer 19

T

Tail Pipe 67
Test Port 55, 189, 199
Throttle Pedal, Electronic 39
Tie Rod Kit, Hydraulic Valve 195
Tie Rod, Axle 101
Tilt Cylinder 133, 177
Tire 95
Toolbox Cover 49
Top Glass Filler 15
Torque Converter 75
Transmission 73, 75, 85, 87, 89
Transmission / Hydraulic Cooler Assembly 71
Transmission Case 77
Transmission Filter 7, 73
Transmission Mount 73
Truss Boom 223
Turn Signal Flasher 21, 23

silverhorn.co.uk

PAGE

U

Universal Joint 73
Upper Charge Air Tube 71

V

Valve Stem 95
Valve, Check 147
Valve, Double Port Check 221
Valve, Dual PO 215
Valve, Flow Control 217
Valve, Outrigger 55
Valve, Steer Select 147
Valve, Water 25
Vent 101
Vent, Transmission 77

W

Water Sensor 7
Wheel 95
Wheel Hub 105, 111
Wheel Rim 95
Wheel Stud 105, 111
Winch Ball 223
Winch Cable 223
Winch Sheave 223
Wiper 13
Wiper Arm 13
Wiper Motor 13
Wire Harness, A/C 29
Wire Harness, Canopy 21
Wire Harness, ECU Interface 21, 61
Wire Harness, Electronic Throttle 21, 61
Wire Harness, E-Stop Remote 58
Wire Harness, Ether Kit 61
Wire Harness, Frame 21
Wire Harness, Front Wiper 13
Wire Harness, Head Light 23
Wire Harness, Light Package 23
Wire Harness, Outriggers 55, 199
Wire Harness, PWP/WPS 57
Wire Harness, Radio Remote 59
Wire Harness, Rear Lights 23
Wire Harness, Strobe Light 21
Wire Harness, Throttle 39
Wire Harness, Top Wiper 13
Wire Harness, Washer Bottle 13
Work Light 115
Work Platform 219

silverhorn.co.uk

Torque Specifications

Use these torque values when tightening hardware (excluding: locknuts and self-tapping, thread-forming and metal screws) unless otherwise specified.

Unified National Thread	Grade 2		Grade 5		Grade 8	
	Dry	Lubed	Dry	Lubed	Dry	Lubed
8-32	19*	14*	30*	22*	41*	31*
8-36	20*	15*	31*	23*	43*	32*
10-24	27*	21*	43*	32*	60*	45*
10-32	31*	23*	49*	36*	68*	51*
1/4-20	66*	50*	9	75*	12	9
1/4-28	76*	56*	10	86*	14	10
5/16-18	11	9	17	13	25	18
5/16-24	12	9	19	14	25	20
3/8-16	20	15	30	23	45	35
3/8-24	23	17	35	25	50	35
7/16-14	32	24	50	35	70	55
7/16-20	36	27	55	40	80	60
1/2-13	35	35	75	55	110	80
1/2-20	40	40	90	65	120	90
9/16-12	55	55	110	80	150	110
9/16-18	60	60	120	90	170	130
5/8-11	75	75	150	110	220	170
5/8-18	85	85	180	130	240	180
3/4-10	130	130	260	200	380	280
3/4-16	150	150	300	220	420	320
7/8-9	125	125	430	320	600	460
7/8-14	140	140	470	360	660	500
1-8	190	190	640	480	900	680
1-14	210	210	710	530	1000	740

Metric Course Thread	Grade 8.8		Grade 10.9		Grade 12.9	
	Dry	Lubed	Dry	Lubed	Dry	Lubed
M6-1	8	6	11	7	13.5	10*
24M8-1.25	19	14	27	20	32.5	24*
M10-1.5	37.5	28	53	39	64	47
M12-1.75	65	48	91.5	67.5	111.5	82
M14-2	103.5	76.5	145.5	108	176.5	131
M16-2	158.5	117.5	223.5	165.5	271	200

* *All torque values are in lb.-ft., except those marked with an * , which are in lb.-in.*
For metric torque value (Nm) multiply lb.-ft. value x 1.355, or lb.-in. x 0.113.

silverthorn.co.uk

Manitou Americas, Inc.
One Gehl Way
P. O. Box 179
West Bend, WI 53095-0179 U.S.A

silverhorn.co.uk

50960002/AP0511 © 2011 Manitou Americas, Inc. All Rights Reserved. PRINTED IN U.S.A.