TOYOTA

Powered Stallet Stacker
SLL 16

Valid for machine number: 354260AT-

Only valid for machine number:

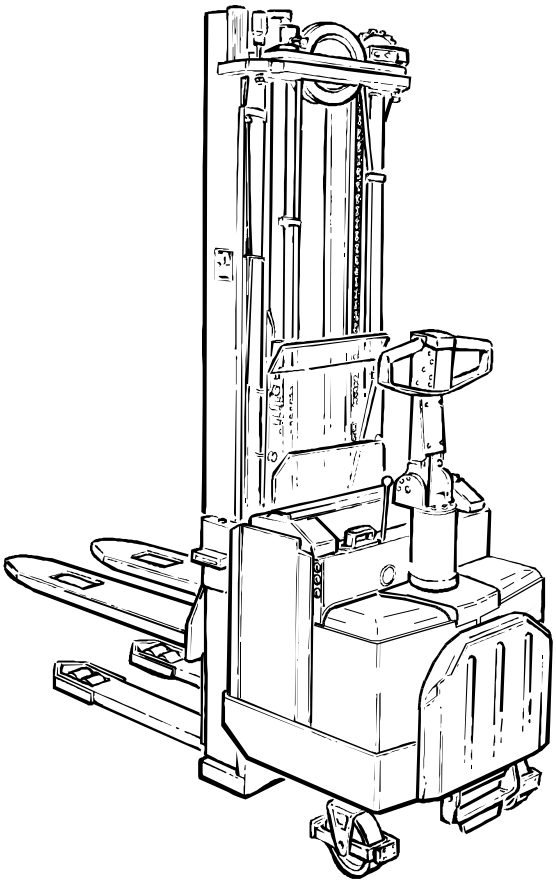

Spare Parts Catalogue

Ordering number 174443

Date ..... 2000-03-29 / ESDG

© TOYOTA Industrial Equipment Europe SARL Ancenis, France

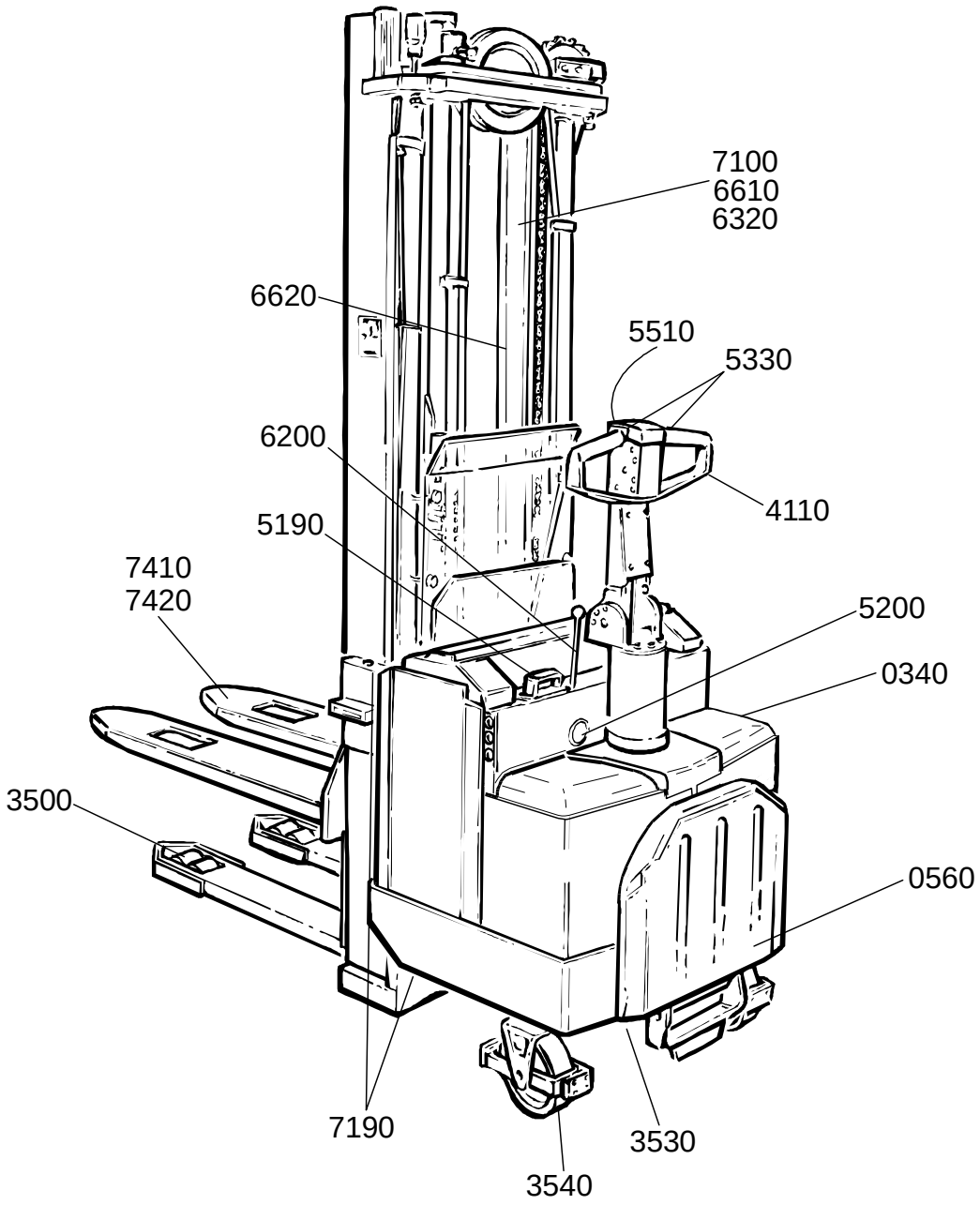

© TOYOTA Industrial Equipment Europe SARL Ancenis, France

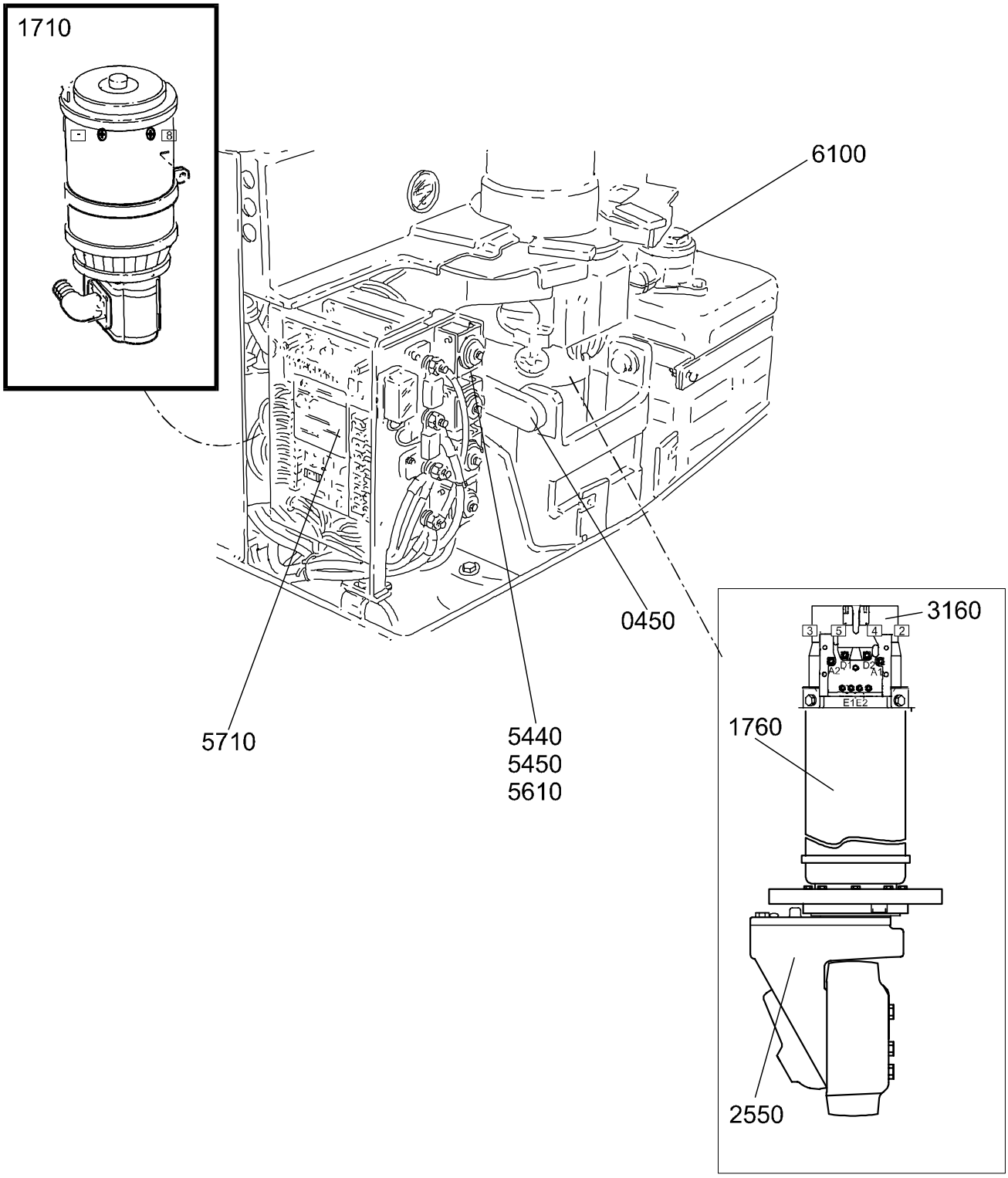

© TOYOTA Industrial Equipment Europe SARL Ancenis, France

0000 Chassis

Chassi; Chassis; Châssis

0340-110 Inspection covers
Huvar, luckor; Hauben, Abdeckungen; Capots, couvercles

0390-040 Battery compartment parts
Batteriutrymmesdelar; Batterieraumteile; Pièce de compartiment batterie

0450-020 Motor fixing points
Motorupphängning/-fästen; Motoraufhängung/Halterung; Points de fixation moteur

0560-024 Platform incl. fixing points
Åkplattform med infästning; Fahrerplattform mit Befestigung; Plateforme et fixations

0640-041 Driver controls (mechanical)
Förarreglage (mekaniskt); Bedienungselemente (mech.); Commandes (mécaniques)

0820-083 Finger/foot guards
Finger-/fotskydd; Finger-/ Fussschutz; Protection de doigts/pieds anti-écrasement

0830-008 Collision bumper/guards
Kollitionsbåge/-skydd; Anfahrschutzbügel; Bouclier pare-choc

0840-021 Driver protection
Förarskydd; Fahrerschutz; Protection de cariste

0850-098 Signs, warnings, decals
Skyltar, varningar, dekaler; Schilder, Warnzeichen, Aufkleber; Vignettes, avertissements, autocollants

1000 Motors

Motorer; Motoren; Moteurs

1710-006 Electric pump motor
Elektrisk pumpmotor; Elektro-Pumpenmotor; Moteur de pompe électrique

1760-001 Electric drive motor
Elektrisk åkmotor; Elektro-Fahrmotor; Moteur de traction électrique

2000 Transmission/Drive gear

Kraftöverföring/Drivväxel; Kraftübertragung/Fahrgetriebe; Transmission/ Groupe de traction

2550-017 Mechanical drive gear unit
Drivaggregat/-växel; Antriebsaggregat/-getriebe; Groupe de traction, réducteur

© TOYOTA Industrial Equipment Europe SARL Ancenis, France

3000 Brake/Wheel/Caterpillar system

Broms-/Hjul/Bandsystem; Brems-/Rad-/Bandsystem; Freins/Roues/ Chenilles

3370-014 Electromagnetic parking brake
El-parkeringsbroms, magnetbroms; Elektro-Feststellbremse, Magnetbremse; Frein de stationnement électromagnétique

3500-020 Wheels **Singel wheel**
Hjul; Räder; Roues

3500-021 Wheels **Bogiewheel**
Hjul; Räder; Roues

3530-019 Drive wheel
Drivhjul; Antriebsrad; Roue motrice

3540-021 Support/castor wheels
Stöd-/länkhjul; Stützräder/Gelenkrollen; Roues stabilisatrices/pivotantes

4000 Steering system

Styrsystem; Steuer-/Lenksystem; Système de direction

4110-081 Steering arm / wheel / lever **Machine with driver platform**
Styr- arm/ratt/spak; Deichsel, Lenkrad-hebel; Timon/volant/levier de direction

4110-082 Steering arm / wheel / lever **Machine without driver platform**
Styr- arm/ratt/spak; Deichsel, Lenkrad-hebel; Timon/volant/levier de direction

5000 Electrical system

Elektriskt system; Elektroanlage; Système électrique

5160-025 General alarm signals (audible/visual)
Signal/larm (ljud-/ljus-); Warn-/Alarmsignale (Aukust./Opt.); Avertisseur (sonore/lumineux), dispositifs dalarme’

5190-019 Battery cut out connector/contactor
Batterifrånskiljare, huvudkontaktor; Batterietrennung, Hauptkontaktor; Coupe-circuit de batterie, contacteur

5200-007 Instrument panel, display
Instrumentpanel, display; Instrumentpanel, Display; Tableau de bord, afficheur

5310-025 Start/stop switch
Start/stoppströmställare; Schalter Fahren/Anhalten; Interrupteur (coupe-circuit) démarrage/arrêt

5330-029 Speed control
Fartreglering; Geschwindigkeitsreglung; Régulation de vitesse

5390-077 Driving function harnesses/ fuse
Åkfunktionskablage/-säkring; Verkabelung, Sicherung Fahrfunktion; Câblage/ fusible fonction de déplacement

5430-044 Drive motor cables/resistors/fuses
Drivmotorkablar/-motstånd/-säkring; Fahrmotorkabel/-widerstand/-sicherung; Câbles/résitances/fusible moteur de traction

5440-010 Direction contactors
Riktningskontaktorer; Richtungskontaktoren; Contacteurs de direction

© TOYOTA Industrial Equipment Europe SARL Ancenis, France

5510-035 **Work function micro switches, potentiometers**
Arbetsfunktionsbrytare/-potentiometer; Schalter/Potentiometer Arbeitsfunktion; Rupteurs (switchs)/ potentiomètres

5510-036 **Work function micro switches, potentiometers** **Cold stores**
Arbetsfunktionsbrytare/-potentiometer; Schalter/Potentiometer Arbeitsfunktion; Rupteurs (switchs)/ potentiomètres

5610-008 **Pump contactor**
Pumpkontaktor; Pumpenmotorkontaktor; Contacteur (moteur) de pompe

5710-027 **Drive/multi-function PCBs**
Elektronikkort åkning/kombination; Elektronikkarten Fahren/kombination; Cartes électroniques déplacement/combinaison

5850-001 **Positioning probes/ sensors** **Powertrac**
Positioneringsgivare/-sensor; Positionsgeber/-sensor; Capteurs de positionnement

6000 Hydraulic/pneumatic system

Hydraulik/pneumatik; Hydraulikanlage/Pneumatik; Système hydraulique/pneumatique

6100-035 **Hydraulic unit**
Hydraulaggregat; Hydraulikaggregat; Unité hydraulique

6200-001 **Hydraulic system chassi mounted**
Hydraulsystem chassimonterat; Hydraulikanlage Chassis; Système hydraulique châssis

6200-003 **Hydraulic system chassi mounted** **Electric lifting / sinking**
Hydraulsystem chassimonterat; Hydraulikanlage Chassis; Système hydraulique châssis

6300-001 **Hydraulic system mast mounted**
Hydraulsystem stativmonterat; Hydraulikanlage Hubeinrichtung; Système hydraulique mât

6320-005 **Mast hydraulic lines** **Duplex Tele**
Stativhydraulledningar; Hydraulikleitungen Hubeinrichtung; Circuits hydrauliques mât

6320-006 **Mast hydraulic lines** **Duplex HiLo**
Stativhydraulledningar; Hydraulikleitungen Hubeinrichtung; Circuits hydrauliques mât

6320-056 **Mast hydraulic lines** **Triplex Hi-Lo**
Stativhydraulledningar; Hydraulikleitungen Hubeinrichtung; Circuits hydrauliques mât

6610-006 **Main lift cylinders** **Duplex Tele**
Huvudlyftcylindrar; Haupthubzylinder; Vérin de levage, principal

6610-007 **Main lift cylinders** **Duplex HiLo**
Huvudlyftcylindrar; Haupthubzylinder; Vérin de levage, principal

6610-044 **Main lift cylinders** **Triplex Hi-Lo**
Huvudlyftcylindrar; Haupthubzylinder; Vérin de levage, principal

6620-003 **Free lift cylinder** **Duplex HiLo**
Frilyftscylinder; Freihubzylinder; Vérin de levée libre

6620-027 **Free lift cylinder** **Triplex Hi-Lo**
Frilyftscylinder; Freihubzylinder; Vérin de levée libre

6680-001 **Powertrak cylinder**
Powertrak cylinder; Powertrak Zylinder; Vérin TGP (Traction Grande Puissance)

© TOYOTA Industrial Equipment Europe SARL Ancenis, France

7000 Work function - lifting masts

Arbetsfunktion - lyftstativ; Arbeitsfunktion - Hubgerüste; Fonction de travail - mâts de levage

7100-006 **Main mast** **Duplex HiLo**
Huvudstativ/-mast; Haupthubgerüst/-mast; Mât principal

7100-029 **Main mast** **Triplex Hi - Lo**
Huvudstativ/-mast; Haupthubgerüst/-mast; Mât principal

7100-031 **Main mast** **Duplex Tele**
Huvudstativ/-mast; Haupthubgerüst/-mast; Mât principal

7190-012 **Main mast suspension**
Huvudstativinfästning; Befestigung Haupthubgerüst; Suspension mât principal

7420-088 **Fork carriage unit, integrated sideshift, fork spread**
Gaffelvagn med sideshift/gaffelspridning; Gabelwagen/-mit Seitenschieber/Zinkenverstellung; Tablier porte-fourches/de déplacement latéral, écarteur de fourche intégré

9000 Options/attachments

Tillbehör/extrautrustning; Zubehör /Zusatzausrüstung; Equipement supplémentaire/Options

9500-055 **Other extra equipment** **Writing table**
Extra utrustning övrigt; Zusatzausrüstung Sonstiges; Autre équipement supplémentaire

9500-057 **Other extra equipment** **Load support**
Extra utrustning övrigt; Zusatzausrüstung Sonstiges; Autre équipement supplémentaire

9550-005 **Battery changing equipment**
Batteribytesanordning; Batteriewechselvorrichtung; Equipement de changement batterie

© TOYOTA Industrial Equipment Europe SARL Ancenis, France

0340-110

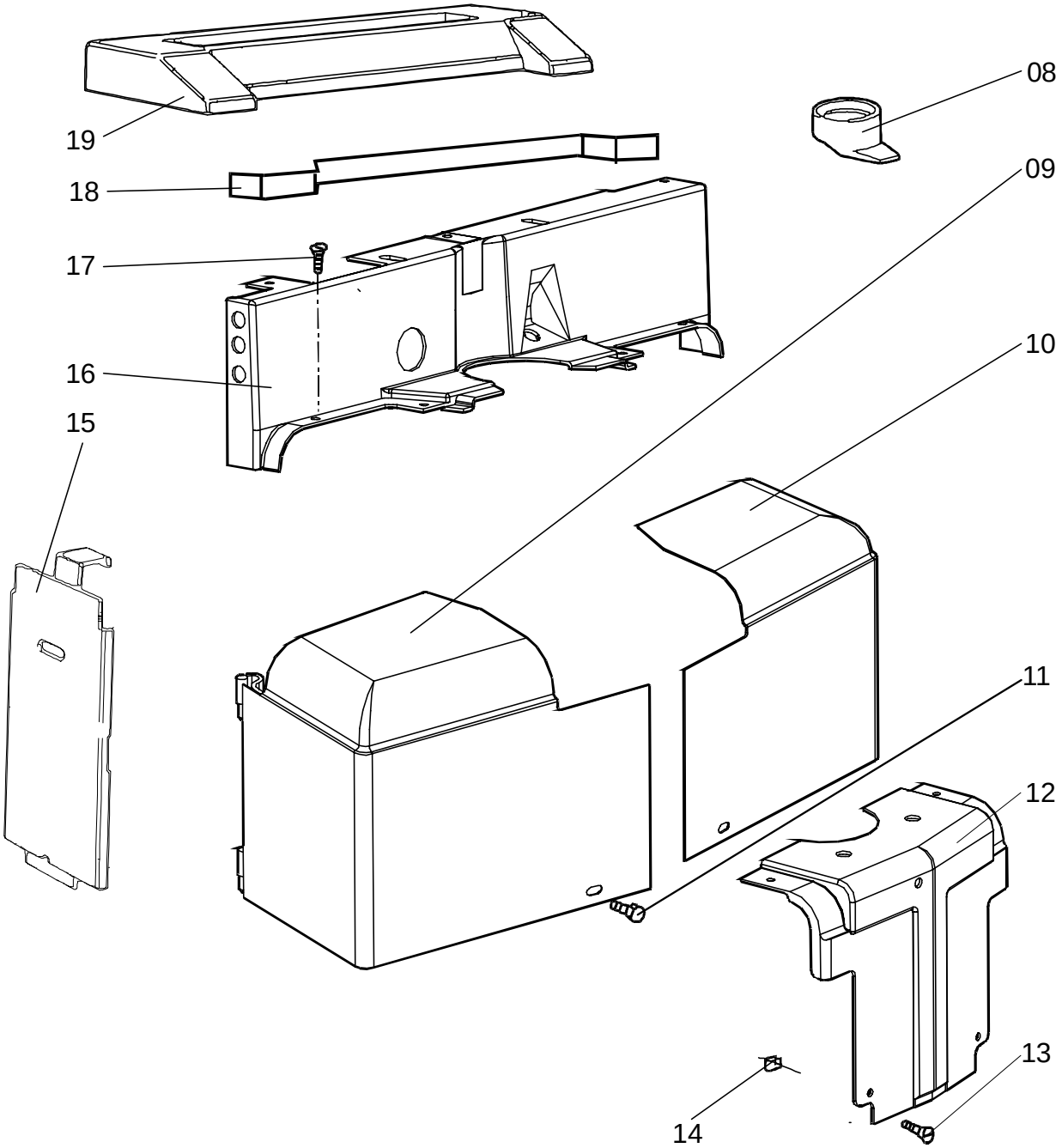

© TOYOTA Industrial Equipment Europe SARL Ancenis, France

0340-110 Inspection covers

[1999-03-24]

Huvar, luckor; Hauben, Abdeckungen; Capots, couvercles

			595 SLL 16	287167 -
Pos	Description	Pcs	Part No	Note
08	Dust guard Damask; Gamaschen; Dispositif de protection	1	112004	
09	Cover(Left) Huv(Vänster); Haube(Links); Capot(Gauge)	1	167813-031	
10	Cover(Right) Huv(Höger); Haube(Recht); Capot(Droit)	1	167814-031	
11	Screw Skruv; Schraube; Vis	2	27564	
12	Housing Kåpa; Haus; Chape	1	167810	
13	Screw Skruv; Schraube; Vis	4	28474	
14	Nut Mutter; Mutter; Ecrou	2	127035-004	
15	Cover.(Battery compartment + 100 mm) Lucka(Batteriutrymme + 100 mm); Deckel(Batteriraum +100 mm); Couvercle(Compartiment de batterie + 100 mm)	1	165265-031	
15	Cover. Lucka; Deckel; Couvercle	1	165279-031	
16	Instument panel Instrumentpanel; Instrumentpaneel; Panneau des instrument	1	167817	
17	Screw Skruv; Schraube; Vis	11	28474	
18	Plate(Battery compartment + 100 mm) Plåt(Batteriutrymme + 100 mm); Platte(Batteriraum +100 mm); Plaque(Compartiment de batterie + 100 mm)	1	134771	
19	Battery door Batterilucka; Batterietür; Porte de batterie	1	127080	
19	Battery door(Machine width 790 mm) Batterilucka(Maskinbredd 790 mm); Batterietür(Breite der Maschine 790 mm); Porte de batterie(Largeur de machine 790 mm)	1	153081	

© TOYOTA Industrial Equipment Europe SARL Ancenis, France

0390-040

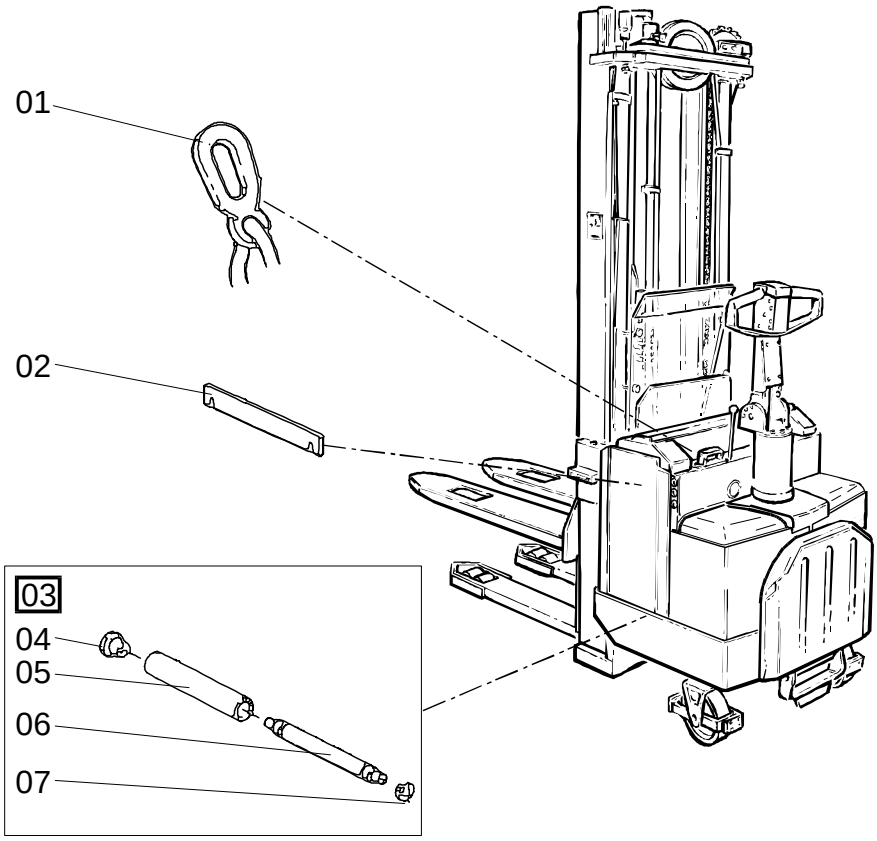

0390-040 Battery compartment parts

[1999-03-02]

Batteriutrymmesdelar; Batterieraumteile; Pièce de compartiment batterie

			595 SLL 16	287167 -
Pos	Description	Pcs	Part No	Note
01	Battery catch(Complete) Batteristopp(Komplett); Batteristopf(Komplett); Arret de batterie(Complet)	1	126885	
02	Catch Spärr; Sperre; Arret	1	101182	
03	Roller(Complete) Rulle(Komplett); Rolle(Komplett); Roleau(Complet)	4	138651-002	
04	Roller bearing Rullager; Rollenlager; Palier à roleaux	8	26974	
05	Roller Rulle; Rolle; Roleau	4	138650-002	
06	Axle Axel; Achse; Axe	4	138649-002	
07	Locking ring Spårring; Schliessring; Circlip	8	20207	

© TOYOTA Industrial Equipment Europe SARL Ancenis, France

© TOYOTA Industrial Equipment Europe SARL Ancenis, France

0450-020

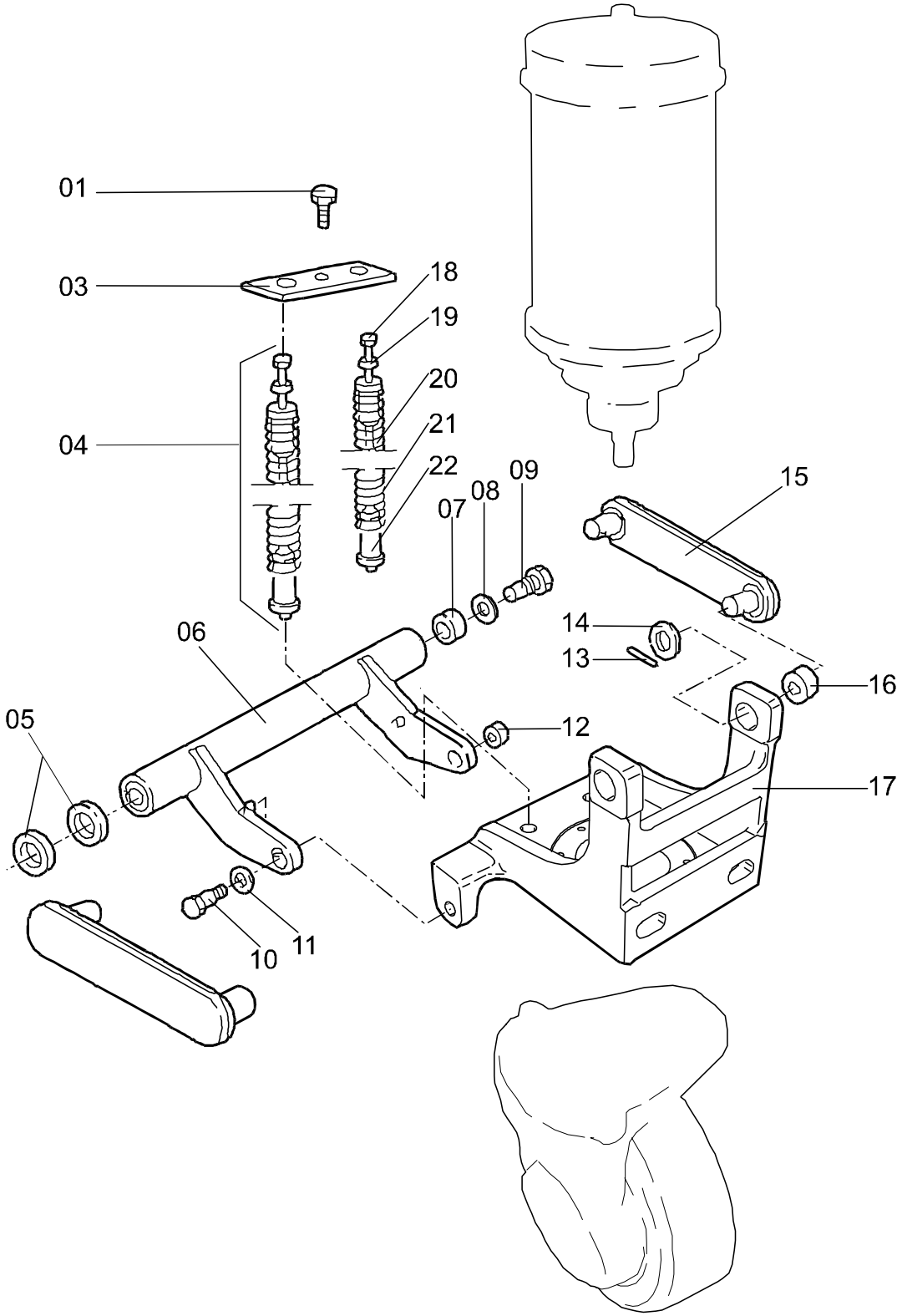

© TOYOTA Industrial Equipment Europe SARL Ancenis, France

0450-020 Motor fixing points

[1998-03-24]

Motorupphängning/-fästen; Motoraufhängung/Halterung; Points de fixation moteur

			595 SLL 16	287167 -
Pos	Description	Pcs	Part No	Note
01	Screw Skruv; Schraube; Vis	1	28750	
03	Plate Plåt; Platte; Plaque	1	132844	
04	Spring unit(Complete) Fjäderenhet(Komplett); Federeinheit(Komplett); Unite de ressort(Complet)	2	130367	Iincreased drive wheel pressure Förhöjd drivhjulstryck; Erhöhter Antriebsraddruck; Pression accrue de roue d'entraînement
04	Spring unit(Complete) Fjäderenhet(Komplett); Federeinheit(Komplett); Unite de ressort(Complet)	2	132918	Standard design Standardutförande; Normalausrüstung
05	Washer(0,5 mm) Bricka; Scheibe; Rondelle		121334-001	
05	Washer(1 mm) Bricka; Scheibe; Rondelle		121334-002	
05	Washer(2 mm) Bricka; Scheibe; Rondelle		121334-003	
06	Torsion tube Vridrör; Drehrohrl; Levier de tringlel	1	132676-002	
07	Bush Bussning; Bague; Bague	2	140175	
08	Washer Bricka; Scheibe; Rondelle	2	23604	
09	Screw Skruv; Schraube; Vis	2	109317	
10	Screw Skruv; Schraube; Vis	2	109586	
11	Washer(2 mm) Bricka; Scheibe; Rondelle	2	121334-003	
12	Bush Bussning; Bague; Bague	2	140173	
13	Locking pin Spännstift; Spannstift; Goupille	4	20014	
14	Washer Bricka; Scheibe; Rondelle	4	20013	
15	Link Länk; Gelenk; Bras	2	109319	
16	Bush Bussning; Bague; Bague	2	140173	
17	Motor bracket Motorfäste; Motorhalterung; Moteur de Support	1	101151	
18	Screw Skruv; Schraube; Vis	1	27813	
19	Guide pin Styrtapp; Führungstift; Goupille de guidage	1	130369	
20	Pipe Rör; Rohr; Tube	1	130368	
21	Spring Fjäder; Feder; Ressort	2	132662	Iincreased drive wheel pressure Förhöjd drivhjulstryck; Erhöhter Antriebsraddruck; Pression accrue de roue d'entraînement
21	Spring Fjäder; Feder; Ressort	2	132663	Standard design Standardutförande; Normalausrüstung
22	Guide pin Styrtapp; Führungstift; Goupille de guidage	1	130370	

© TOYOTA Industrial Equipment Europe SARL Ancenis, France

0560-024

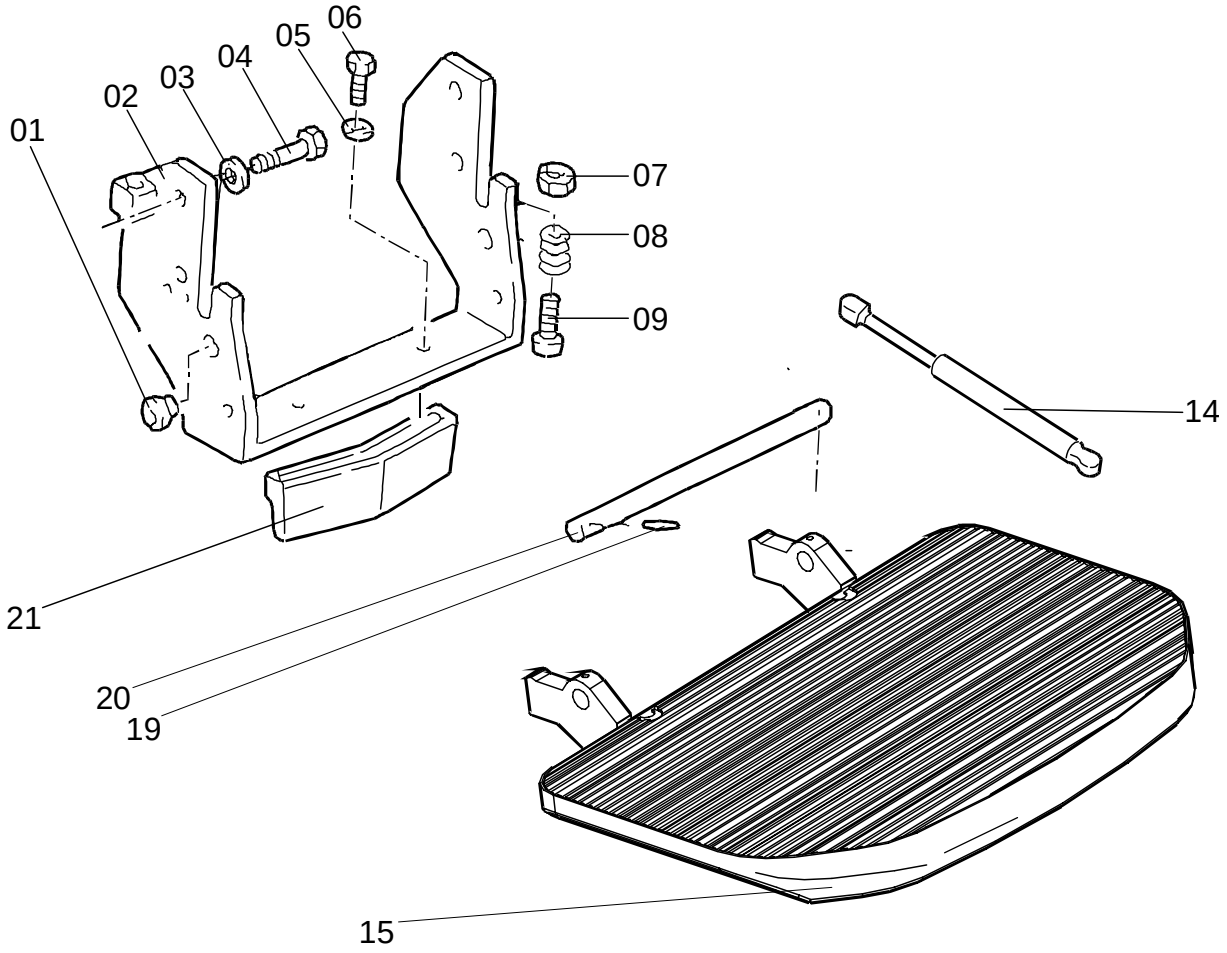

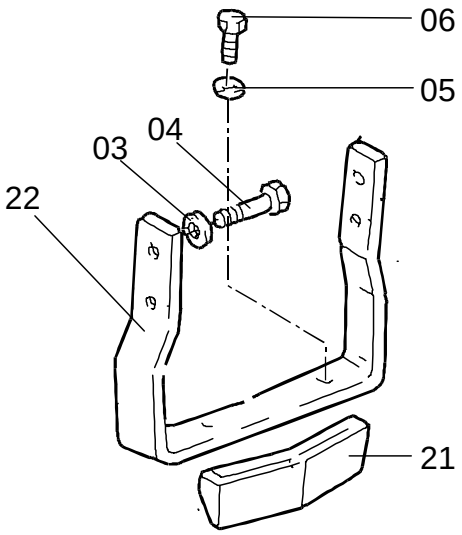

© TOYOTA Industrial Equipment Europe SARL Ancenis, France

0560-024 Platform incl. fixing points

[1999-03-02]

Åkplattform med infästning; Fahrerplattform mit Befestigung; Plateforme et fixations

			595 SLL 16	292314 -
Pos	Description	Pcs	Part No	Note
01	Bush Bussning; Bague; Bague	2	140178	
02	Platform bracket Plattformsfäste; Plattformbefestigung; Support de plateforme	1	139841	
03	Nut Mutter; Mutter; Ecrou	4	20096	
04	Screw Skruv; Schraube; Vis	4	21820	
05	Washer Bricka; Scheibe; Rondelle	2	21275	
06	Screw Skruv; Schraube; Vis	2	21935	
07	Nut Mutter; Mutter; Ecrou	2	21123	
08	Cup spring Tallriksfjäder; Tellerfeder; Ressort de disque	52	23986	
09	Screw Skruv; Schraube; Vis	2	20542	
14	Gas suspension Gasfjäder; Gasfederung; Suspension à gaz	1	122314-088	
15	Platform Plattform; Plattform; Plate-forme	1	168380-002	
19	Locking pin Spännstift; Spannstift; Goupille	1	28438	
20	Axle Axel; Achse; Axe	1	147122	
21	Deflector Avvisare; Abweiser; Borne	1	111817	
22	Bracket(Machine without driver platform) Fäste(Maskin utan förarplattform); Halterung(Maschine exkl. Fahrerplattform); Support(Machine excl. plateforme du conducteur)	1	112005	

© TOYOTA Industrial Equipment Europe SARL Ancenis, France

0640-041

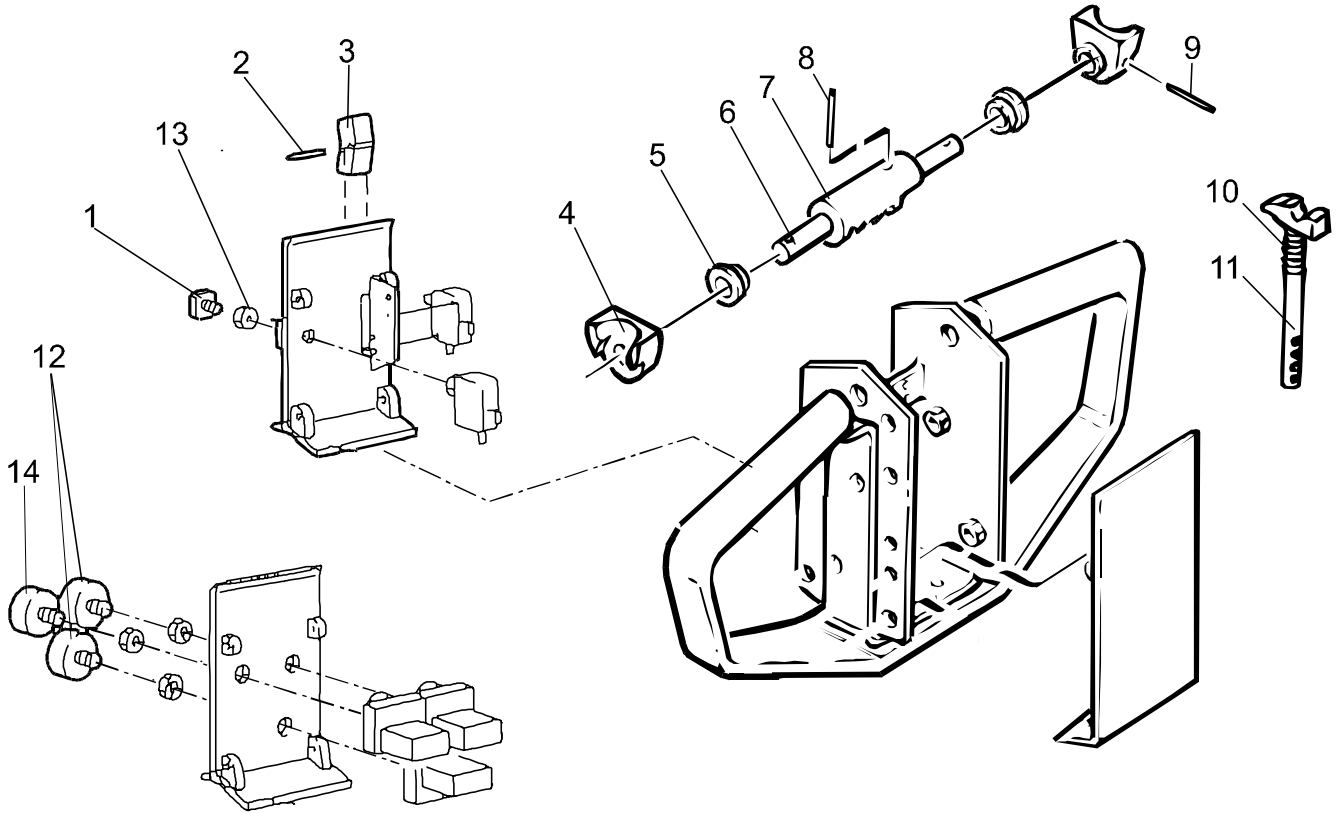

© TOYOTA Industrial Equipment Europe SARL Ancenis, France

0640-041 Driver controls (mechanical) [1998-08-05]

Förarreglage (mekaniskt); Bedienungselemente (mech.); Commandes (mécaniques)

			595 SLL 16	276974 -
Pos	Description	Pcs	Part No	Note
01	Push-button Tryckknapp; Druckknopf; Bouton	1	140856	
02	Cylinder pin Cylindrisk pinne; Zylinderstift; Goupille cylindre	1	23790	Electric lifting / sinking Elektrisk lyft / sänkning; Elektrische hebe / senkung; Levage / dépression de electrique
03	Push-button Tryckknapp; Druckknopf; Bouton	1	55964	Electric lifting / sinking Elektrisk lyft / sänkning; Elektrische hebe / senkung; Levage / dépression de electrique
04	Rocker Vippa; Kippe; Levier oscillant	2	141851	
05	Bush Bussning; Bague; Bague	2	140176	
06	Axle Axel; Achse; Axe	1	142362	
07	Cam disc roller Kamrulle; Umleitungsrolle; Roleau de segment	1	109631	
08	Locking pin Spännstift; Spannstift; Goupille	1	20524	
09	Locking pin Spännstift; Spannstift; Goupille	2	20524	
10	Spring Fjäder; Feder; Ressort	1	46490	
11	Returner Återförare; Rückleiter; Renvoi	1	101216	
12	Push-button Tryckknapp; Druckknopf; Bouton	2	28235	Cold stores Fryshus; Gefrieranlage; Chambre frigor-ifique
13	Nut Mutter; Mutter; Ecrou	1	46205	
14	Push-button Tryckknapp; Druckknopf; Bouton	1	28236	Cold stores Fryshus; Gefrieranlage; Chambre frigor-ifique

© TOYOTA Industrial Equipment Europe SARL Ancenis, France

0820-083

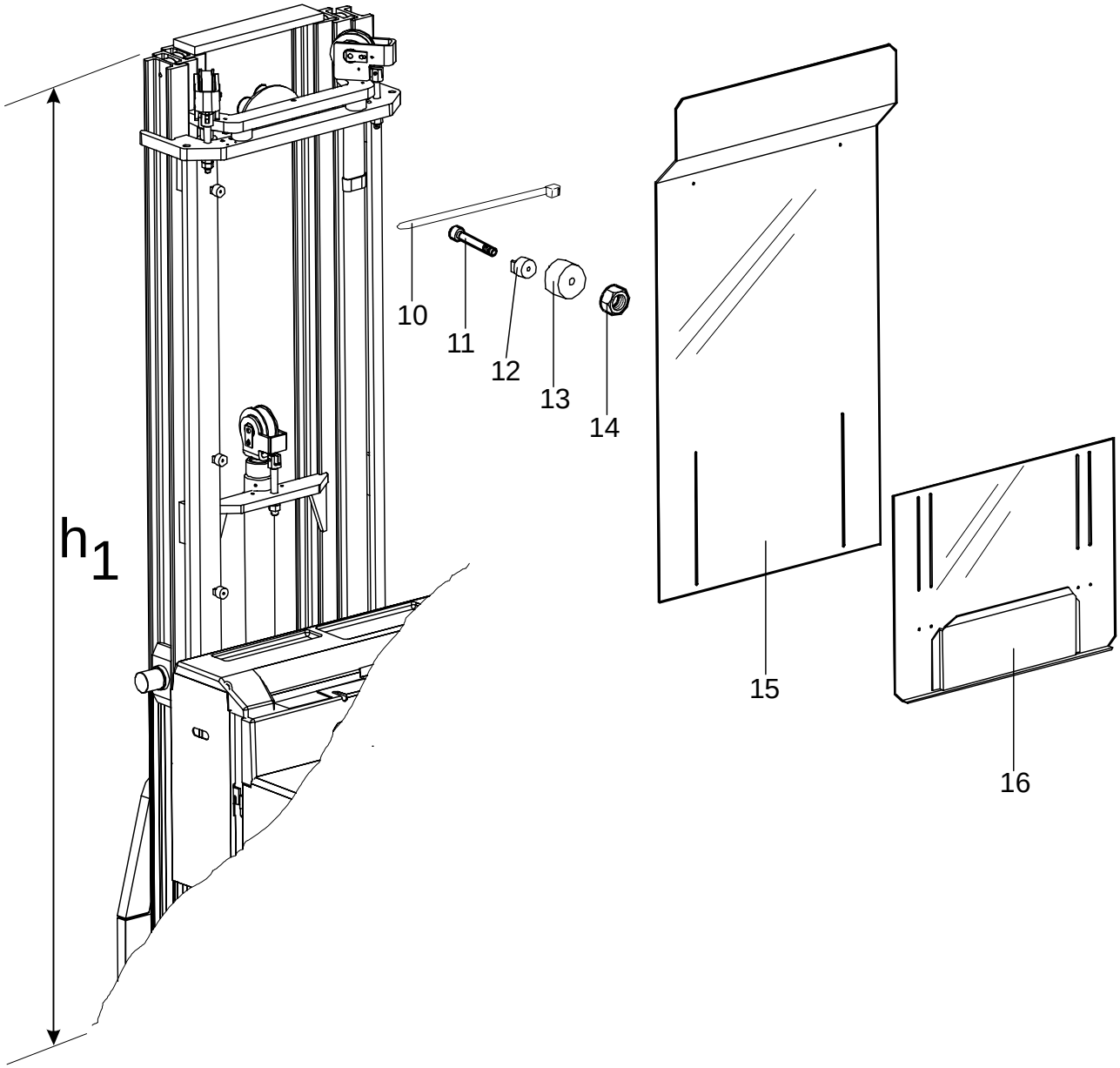

© TOYOTA Industrial Equipment Europe SARL Ancenis, France

0820-083 Finger/foot guards

[2000-02-01]

Finger-/fotskydd; Finger-/ Fussschutz; Protection de doigts/pieds anti-écrasement

			595 SLL 16	354260 -
Pos	Description	Pcs	Part No	Note
10	Clamp Klamma; Rohrschelle; Collier	6	28937	
11	Screw Skruv; Schraube; Vis	4	22724	
11	Screw Skruv; Schraube; Vis	2	22780	
12	Bracket Fäste; Halterung; Support	6	129399	
13	Rubber washer Gummibricka; Gummischeibe; Rondelle de cautchouc	6	139742	
14	Nut Mutter; Mutter; Ecrou	6	21094	
15	Finger cover Fingerskydd; Fingerschutz; Protége main	1	174430	h1 > 2030 mm
15	Finger cover Fingerskydd; Fingerschutz; Protége main	1	174431	h1 =< 2030 mm
16	Finger cover Fingerskydd; Fingerschutz; Protége main	1	174428	

© TOYOTA Industrial Equipment Europe SARL Ancenis, France

0830-008

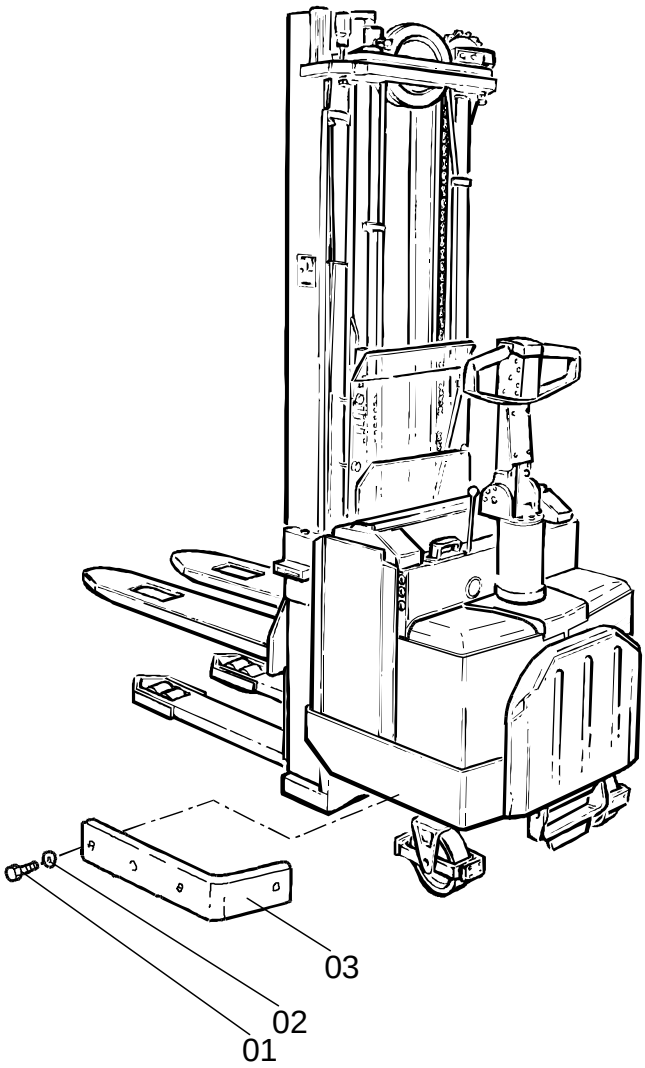

0830-008 Collision bumper/guards

[1999-03-02]

Kollitionsbåge/-skydd; Anfahrschutzbügel; Bouclier pare-choc

			595 SLL 16	285755 -
Pos	Description	Pcs	Part No	Note
01	Screw Skruv; Schraube; Vis	8	29447	
02	Washer Bricka; Scheibe; Rondelle	8	20404	
03	Buffer(Rubber) Buffert(Gummi); Puffer(Gummi); Atténnateur(Gomme)	2	149714	

© TOYOTA Industrial Equipment Europe SARL Ancenis, France

0840-021

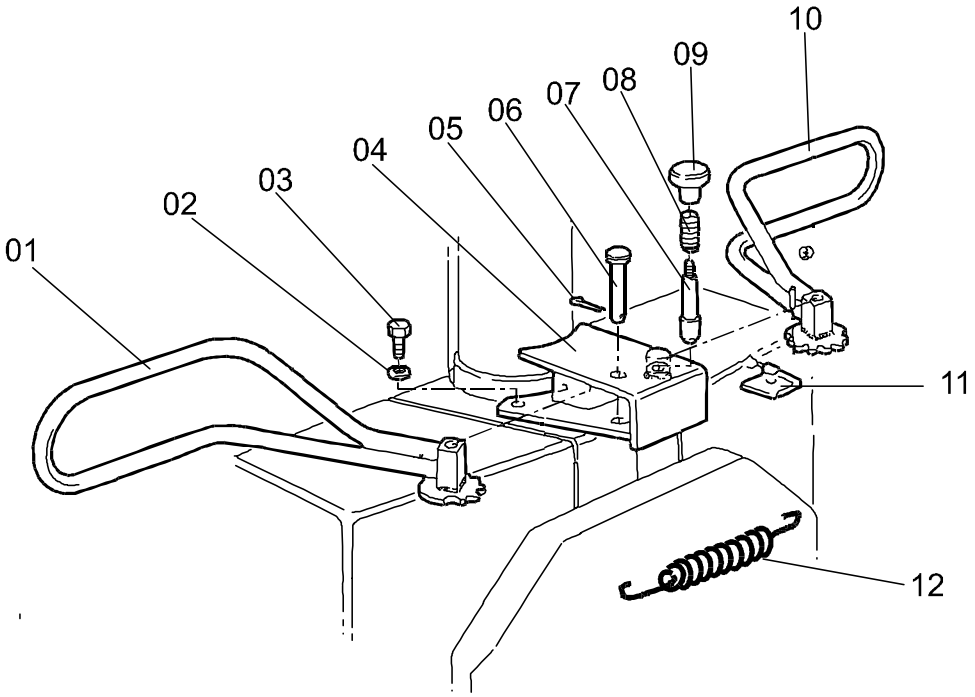

0840-021 Driver protection

[1998-07-29]

Förarskydd; Fahrerschutz; Protection de cariste

			595 SLL 16	292314 -
Pos	Description	Pcs	Part No	Note
01	Gate(Left) Grind(Vänster); Schranke(Links); Barrière(Gauge)	1	127043	
02	Washer Bricka; Scheibe; Rondelle	2	21394	
03	Screw Skruv; Schraube; Vis	2	21816	
04	Consol Konsol; Konsole; Console	1	152313	
05	Cotter pin Saxpinne; Gespalter stift; Goupille fendue	2	20312	
06	Pin Tapp; Zapfen; Pivot	2	28477	
07	Lock plunger Låskolv; Schlossriegel; Fermeture	1	127052	
08	Spring Fjäder; Feder; Ressort	1	24055	
09	Knob Knopp; Knopf; Bouton	1	127053-002	
10	Gate(Right) Grind(Höger); Schranke(Recht); Barrière(Droit)	1	127044	
11	Clamp Klamma; Rohrschelle; Collier	2	127523	
12	Spring Fjäder; Feder; Ressort	1	29954	

© TOYOTA Industrial Equipment Europe SARL Ancenis, France

0850-098

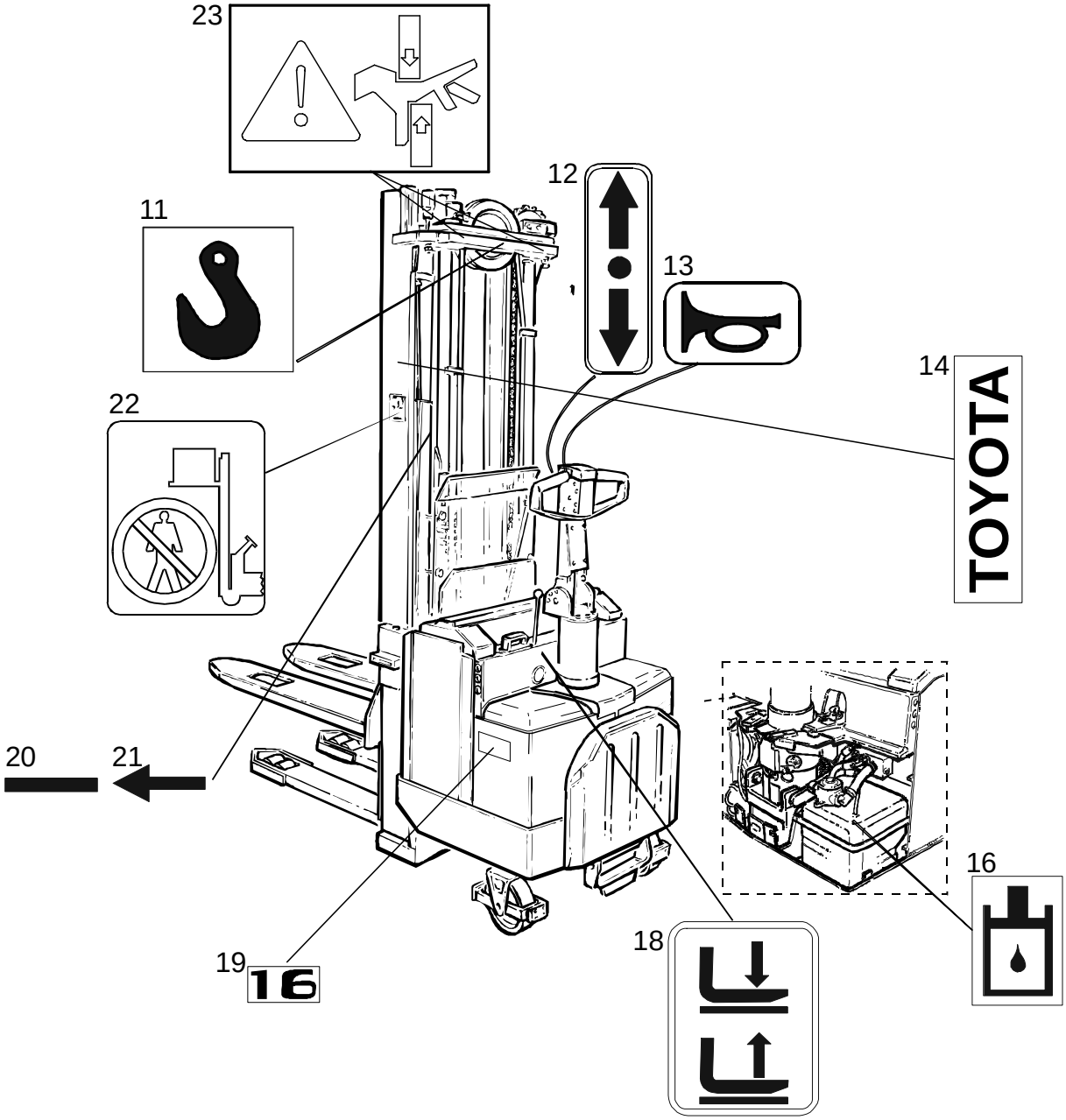

© TOYOTA Industrial Equipment Europe SARL Ancenis, France

0850-098 Signs, warnings, decals [1999-09-01]

Skyltar, varningar, dekaler; Schilder, Warnzeichen, Aufkleber; Vignettes, avertissements, autocollants

			595 SLL 16	285755 -
Pos	Description	Pcs	Part No	Note
11	Sign Skylt; Schild; Vignette	1	152027	
12	Sign Skylt; Schild; Vignette	1	148223	
13	Sign Skylt; Schild; Vignette	1	148227	
14	Sign Skylt; Schild; Vignette	2	168388	
16	Sign Skylt; Schild; Vignette	1	72082	Standard design Standardutförande; Normalausrüstung
18	Sign Skylt; Schild; Vignette	1	148642	
19	Sign(16) Skylt; Schild; Vignette	2	169531	
20	Sign Skylt; Schild; Vignette	1	121787-002	
21	Sign Skylt; Schild; Vignette	1	121786-002	
22	Sign Skylt; Schild; Vignette	2	147316	
23	Sign Skylt; Schild; Vignette	2	172094	

© TOYOTA Industrial Equipment Europe SARL Ancenis, France

1710-006

43

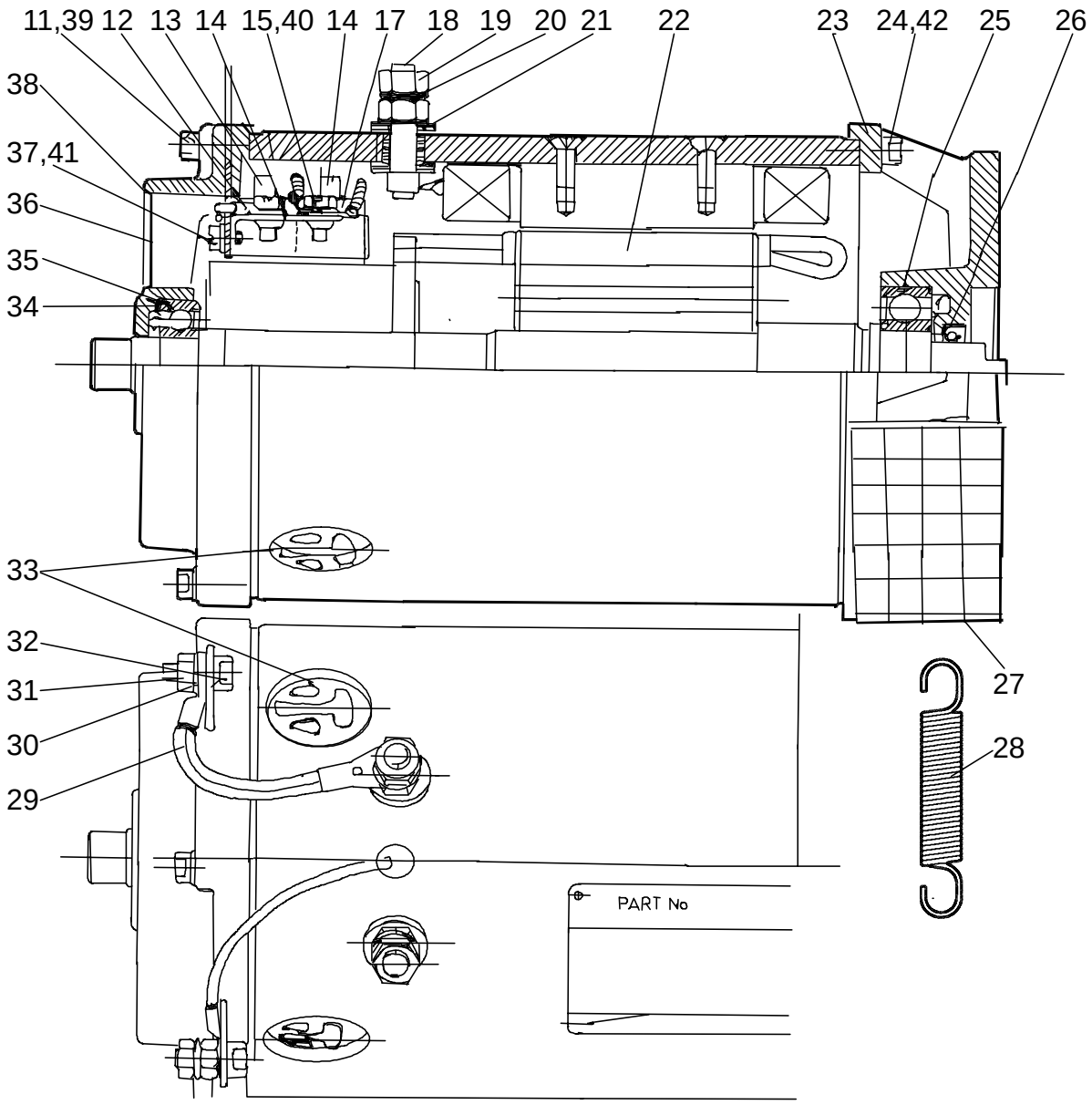

1710-006 Electric pump motor

[1999-01-27]

Elektrisk pumpmotor; Elektro-Pumpenmotor; Moteur de pompe électrique

			595 SLL 16	332675 -
Pos	Description	Pcs	Part No	Note
11	Screw Skruv; Schraube; Vis	4	20831	
12	Cable Kabel; Kabel; Câble	2	27545	
13	Spring Fjäder; Feder; Ressort	8	130429	
14	Carbon brush holder Kolhållare; Kohlebürstenhalter; Support de charbon	4	27549	
15	Screw Skruv; Schraube; Vis	8	21437	
17	Carbon brush Kolborste; Kohlebürste; Charbon	8	167544	
18	Terminal screw Anslutningsbult; Anschlussbolzen; Vis borne	2	27550	

© TOYOTA Industrial Equipment Europe SARL Ancenis, France

Pos	Description	Pcs	Part No	Note
19	Nut Mutter; Mutter; Ecrou	4	20081	
20	Washer Bricka; Scheibe; Rondelle	2	21275	
21	Isolation bush Isolerbussning; Isolierbuchse; Bague isolation	4	27551	
22	Rotor Rotor; Rotor; Rotor	1	169782	
23	End shield Lagersköld; Lagerschild; Bouclier	1	150434	
24	Screw Skruv; Schraube; Vis	6	20743	
25	Ball bearing Kullager; Kugellager; Roulement a billes	1	26650	
26	Sealing ring Tätningsring; Dichtungsring; Bague d´étanchéité	1	22290	
27	Protective grating Skyddsgaller; Schutzgitter; Grille de protection	1	158119	
28	Spring Fjäder; Feder; Ressort	1	157274	
29	Cable Kabel; Kabel; Câble	1	27547	
30	Washer Bricka; Scheibe; Rondelle	2	21351	
31	Nut Mutter; Mutter; Ecrou	2	20249	
32	Screw Skruv; Schraube; Vis	2	20400	
33	Plug Propp; Pfropfen; Bouchon	4	148206	
34	Locking ring Spårring; Schliessring; Circlip	1	27542	
35	Ball bearing Kullager; Kugellager; Roulement a billes	1	27546	
36	End plate Ändplatta; Endplatte; Plaque terminale	1	27544	
37	Screw Skruv; Schraube; Vis	8	23006	
38	End shield Lagersköld; Lagerschild; Bouclier	1	169781	
39	Washer Bricka; Scheibe; Rondelle	4	21307	
40	Washer Bricka; Scheibe; Rondelle	8	21317	
41	Washer Bricka; Scheibe; Rondelle	8	21307	
42	Washer Bricka; Scheibe; Rondelle	6	21307	
43	Pump motor(Complete) Pumpmotor(Komplett); Pumpmotor(Komplett); Moteur de pompe(Complet)	1	166568	

© TOYOTA Industrial Equipment Europe SARL Ancenis, France

1760-001

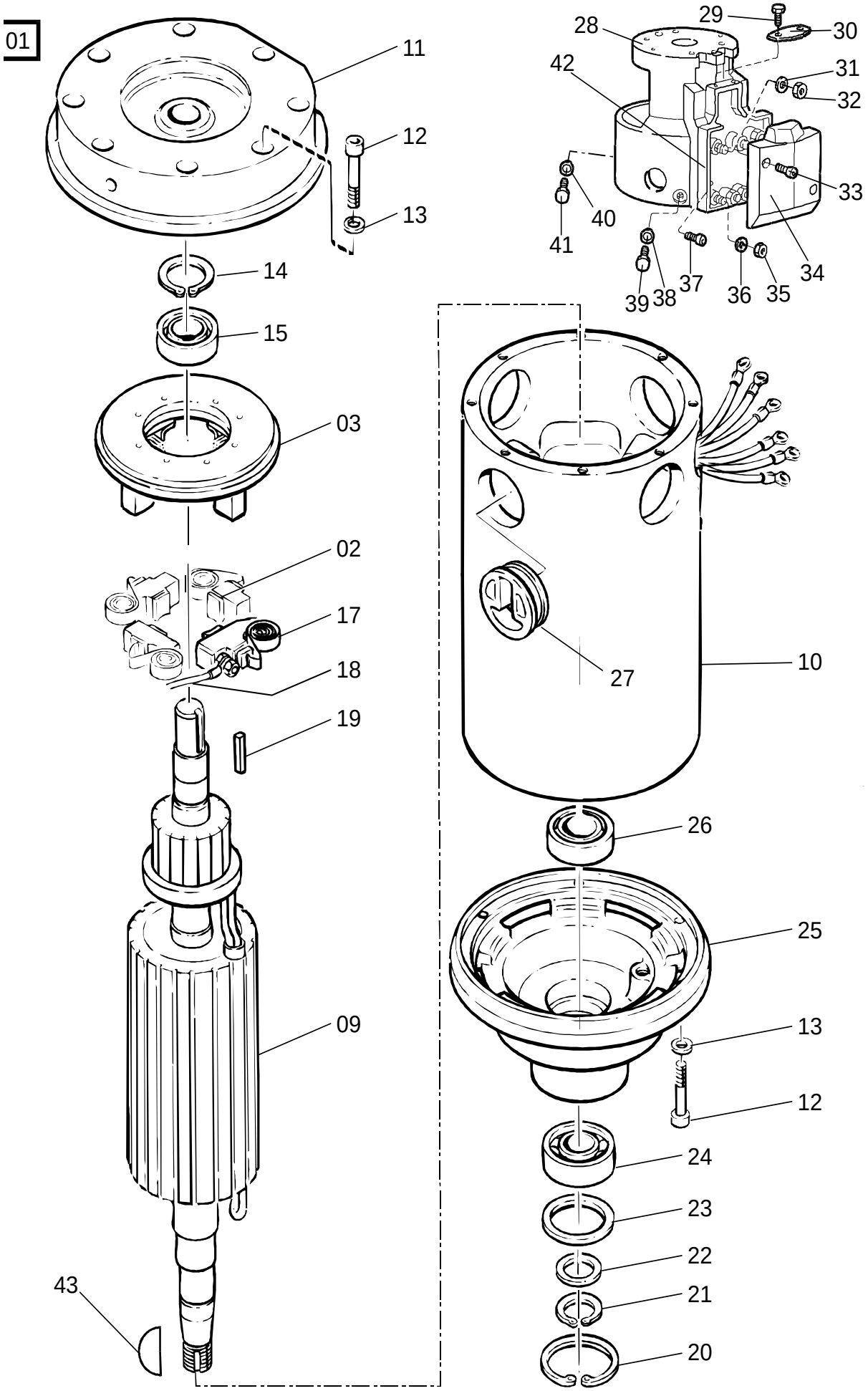

© TOYOTA Industrial Equipment Europe SARL Ancenis, France

1760-001 Electric drive motor

[2000-04-19]

Elektrisk åkmotor; Elektro-Fahrmotor; Moteur de traction électrique

			595 SLL 16	277198 -
Pos	Description	Pcs	Part No	Note
01	Motor(Complete) Motor(Komplett); Motor(Komplett); Moteur(Complet)	1	149861	
02	Carbon brush Kolborste; Kohlebürste; Charbon	4	161611	
03	Brush bridge Borstbrygga; Bürstenbräcke; Support de porte balais	1	130345	
09	Rotor Rotor; Rotor; Rotor	1	139393	
10	Stator(Complete) Stator(Komplett); Ständer(Komplett); Stator(Complet)	1	150431	
11	End shield Lagersköld; Lagerschild; Bouclier	1	147749	
12	Screw Skruv; Schraube; Vis	14	20224	
13	Washer Bricka; Scheibe; Rondelle	14	21351	
14	Locking ring Spårring; Schliessring; Circlip	1	27542	
15	Bearing Lager; Lager; Roulement	1	28560	
17	Spring Fjäder; Feder; Ressort	4	149423	
18	Cable Kabel; Kabel; Câble	2	27899	
19	Key Kil; Keil; Clavette	1	27900	
20	Locking ring Spårring; Schliessring; Circlip	1	20923	
21	Locking ring Spårring; Schliessring; Circlip	1	29515	
22	Washer Bricka; Scheibe; Rondelle	1	29517	
23	Washer Bricka; Scheibe; Rondelle	1	29516	
24	Ball bearing Kullager; Kugellager; Roulement a billes	1	26102	
25	End shield Lagersköld; Lagerschild; Bouclier	1	139160	
26	Sealing Tätning; Dichtung; Joint	1	27898	
27	Plug Propp; Pfropfen; Bouchon	4	148206	
28	Housing Kåpa; Haus; Chape	1	150232	
29	Screw Skruv; Schraube; Vis	2	21151	
30	Clamp Klämma; Klammer; Pincer	1	110851	
31	Washer Bricka; Scheibe; Rondelle	3	20375	
32	Nut Mutter; Mutter; Ecrou	3	20249	
33	Screw Skruv; Schraube; Vis	2	21119	
34	Cap Lock; Deckel; Couvercle	1	110850	
35	Nut Mutter; Mutter; Ecrou	3	20235	
36	Washer Bricka; Scheibe; Rondelle	3	20236	
37	Screw Skruv; Schraube; Vis	2	20219	

© TOYOTA Industrial Equipment Europe SARL Ancenis, France

Pos	Description	Pcs	Part No	Note
38	Washer Bricka; Scheibe; Rondelle	2	126723-003	
39	Screw Skruv; Schraube; Vis	2	28232	
40	Washer Bricka; Scheibe; Rondelle	1	21275	
41	Screw Skruv; Schraube; Vis	1	28518	
42	Terminal board Kopplingsplint; Schaltplint; Tableau de connections	1	110849	
43	Key Kil; Keil; Clavette	1	20150	

© TOYOTA Industrial Equipment Europe SARL Ancenis, France

© TOYOTA Industrial Equipment Europe SARL Ancenis, France

2550-017

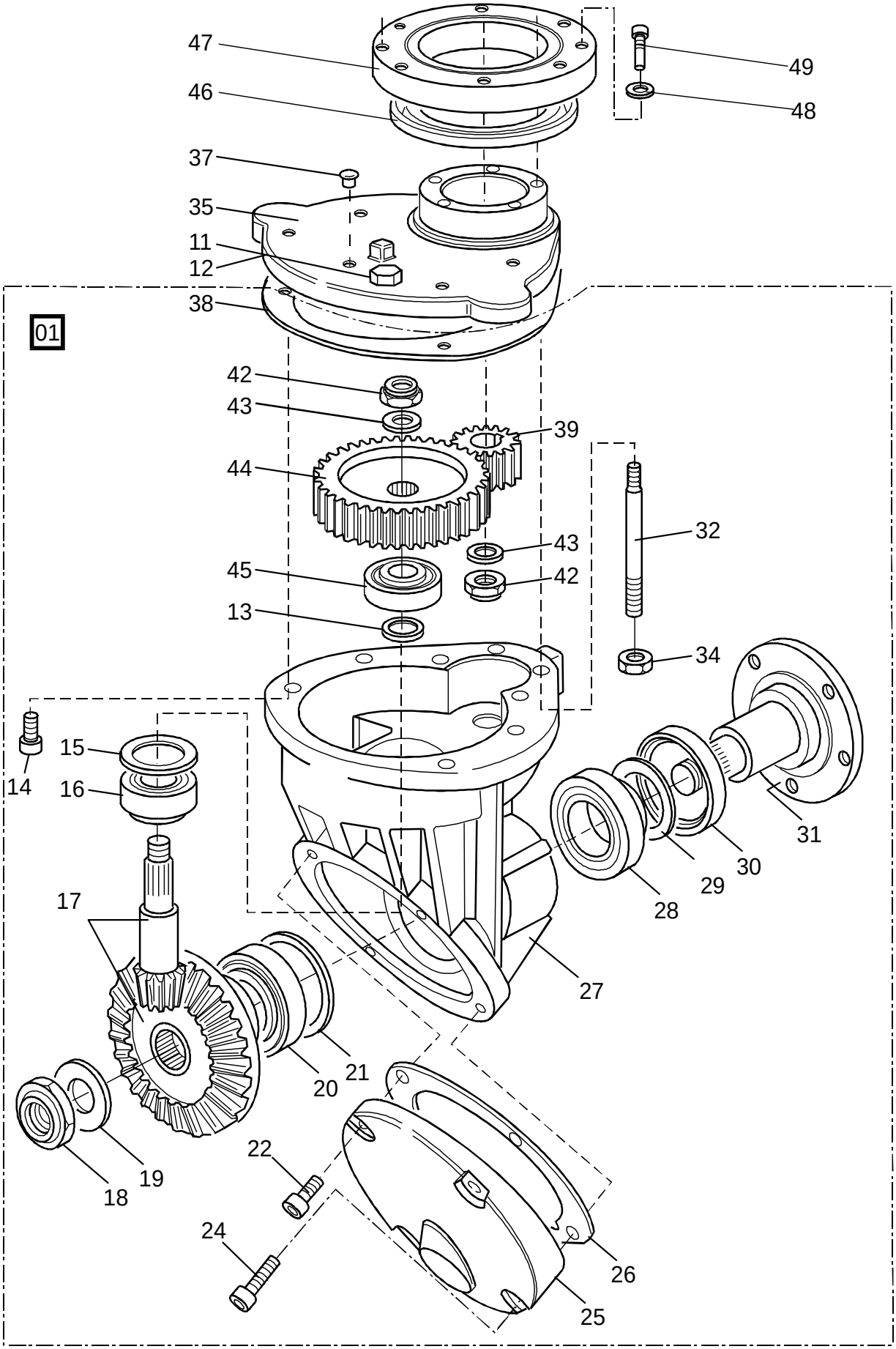

© TOYOTA Industrial Equipment Europe SARL Ancenis, France

2550-017 Mechanical drive gear unit

[1999-05-25]

Drivaggregat/-växel; Antriebsaggregat/-getriebe; Groupe de traction, réducteur

			595 SLL 16	277198 -
Pos	Description	Pcs	Part No	Note
01	Driving gear compl. Drivväxel kompl.; Antriebssatz kompl.; Groupe de entrainement compl.	1	170540	
11	Dip stick Oljesticka; Ölmesstab; Jauge d´huile	1	135915	
12	Washer Bricka; Scheibe; Rondelle	1	28998	
13	Shim(0,05mm) Shims; Schim; Cale		27220	
13	Shim(0,1mm) Shims; Schim; Cale		27221	
13	Shim(0,2mm) Shims; Schim; Cale		27222	
13	Shim(0,3mm) Shims; Schim; Cale		27223	
13	Shim(0,5mm) Shims; Schim; Cale		27224	
13	Shim(1 mm) Shims; Schim; Cale		27225	
14	Screw Skruv; Schraube; Vis	4	21141	
15	Shim(0,05mm) Shims; Schim; Cale		27232	
15	Shim(0,1mm) Shims; Schim; Cale		27233	
15	Shim(0,2mm) Shims; Schim; Cale		27234	
15	Shim(0,3mm) Shims; Schim; Cale		27235	
15	Shim(0,5 mm) Shims; Schim; Cale		27236	
15	Shim(1 mm) Shims; Schim; Cale		27237	
16	Roller bearing Rullager; Rollenlager; Palier à roleaux	1	27208	
17	Spare part kit : Bevel gear Reservdelssats : Koniskt kugghjul; Satz : Kegelrad; Jeux : Roue conique à denture droite	1	101092	
18	Nut Mutter; Mutter; Ecrou	1	101098	
19	Washer Bricka; Scheibe; Rondelle	1	23604	
20	Roller bearing Rullager; Rollenlager; Palier à roleaux	1	27206	
21	Shim(0,05mm) Shims; Schim; Cale		27238	
21	Shim(0,1mm) Shims; Schim; Cale		27239	
21	Shim(0,2mm) Shims; Schim; Cale		27240	
21	Shim(0,3mm) Shims; Schim; Cale		27241	
21	Shim(0,5mm) Shims; Schim; Cale		27242	
21	Shim(1 mm) Shims; Schim; Cale		27243	
22	Screw Skruv; Schraube; Vis	2	28519	
24	Screw Skruv; Schraube; Vis	2	20276	
25	Cap Lock; Deckel; Couvercle	1	127280	

© TOYOTA Industrial Equipment Europe SARL Ancenis, France

Pos	Description	Pcs	Part No	Note
26	Packing Packning; Packung; Étanchage	1	141687	
27	Gear housing Växelhus; Getriebhäuse; Carter étauche	1	135340	
28	Roller bearing Rullager; Rollenlager; Palier à roleaux	1	27206	
29	Shim(0,05mm) Shims; Schim; Cale		27226	
29	Shim(0,1mm) Shims; Schim; Cale		27227	
29	Shim(0,2mm) Shims; Schim; Cale		27228	
29	Shim(0,3mm) Shims; Schim; Cale		27229	
29	Shim(0,5 mm) Shims; Schim; Cale		27230	
29	Shim(1 mm) Shims; Schim; Cale		27231	
30	Sealing Tätning; Dichtung; Joint	1	28490	
31	Axle Axel; Achse; Axe	1	126998	
32	Screw Skruv; Schraube; Vis	4	27216	
34	Nut Mutter; Mutter; Ecrou	8	20016	
35	Cap Lock; Deckel; Couvercle	1	135342	
37	Air bleeder Luftventil; Luftnippel; Soupape (air)	1	27211	
38	Packing Packning; Packung; Étanchage	1	135345	
39	Gear wheel Kugghjul; Zahnrad; Roue dentée	1	111034	
42	Nut Mutter; Mutter; Ecrou	2	101097	
43	Washer Bricka; Scheibe; Rondelle	2	63081	
44	Gear wheel Kugghjul; Zahnrad; Roue dentée	1	111035	
45	Bearing Lager; Lager; Roulement	1	27207	
46	Sealing ring Tätningsring; Dichtungsring; Bague d´étanchéité	1	27210	
47	Ball bearing Kullager; Kugellager; Roulement a billes	1	110290	
48	Washer Bricka; Scheibe; Rondelle	8	20375	
49	Screw Skruv; Schraube; Vis	8	20532	

© TOYOTA Industrial Equipment Europe SARL Ancenis, France

© TOYOTA Industrial Equipment Europe SARL Ancenis, France

3370-014

01

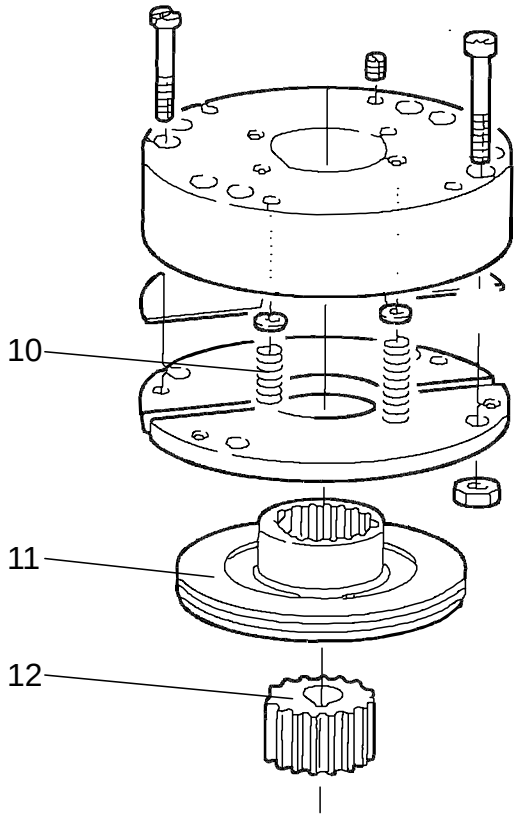

3370-014 Electromagnetic parking brake

[2000-02-02]

El-parkeringsbroms, magnetbroms; Elektro-Feststellbremse, Magnetbremse; Frein de stationnement électromagnétique

			595 SLL 16	354260 -
Pos	Description	Pcs	Part No	Note
01	Brake unit(Complete) Bromsenhet(Komplett); Bremseeinheit(Komplett); Unité de frein(Complet)	1	174491	
10	Spring Fjäder; Feder; Ressort	6	175044	
11	Rotor Rotor; Rotor; Rotor	1	174967	
12	Hub Nav; Nabe; Moyeu	1	174966	

© TOYOTA Industrial Equipment Europe SARL Ancenis, France

3500-020

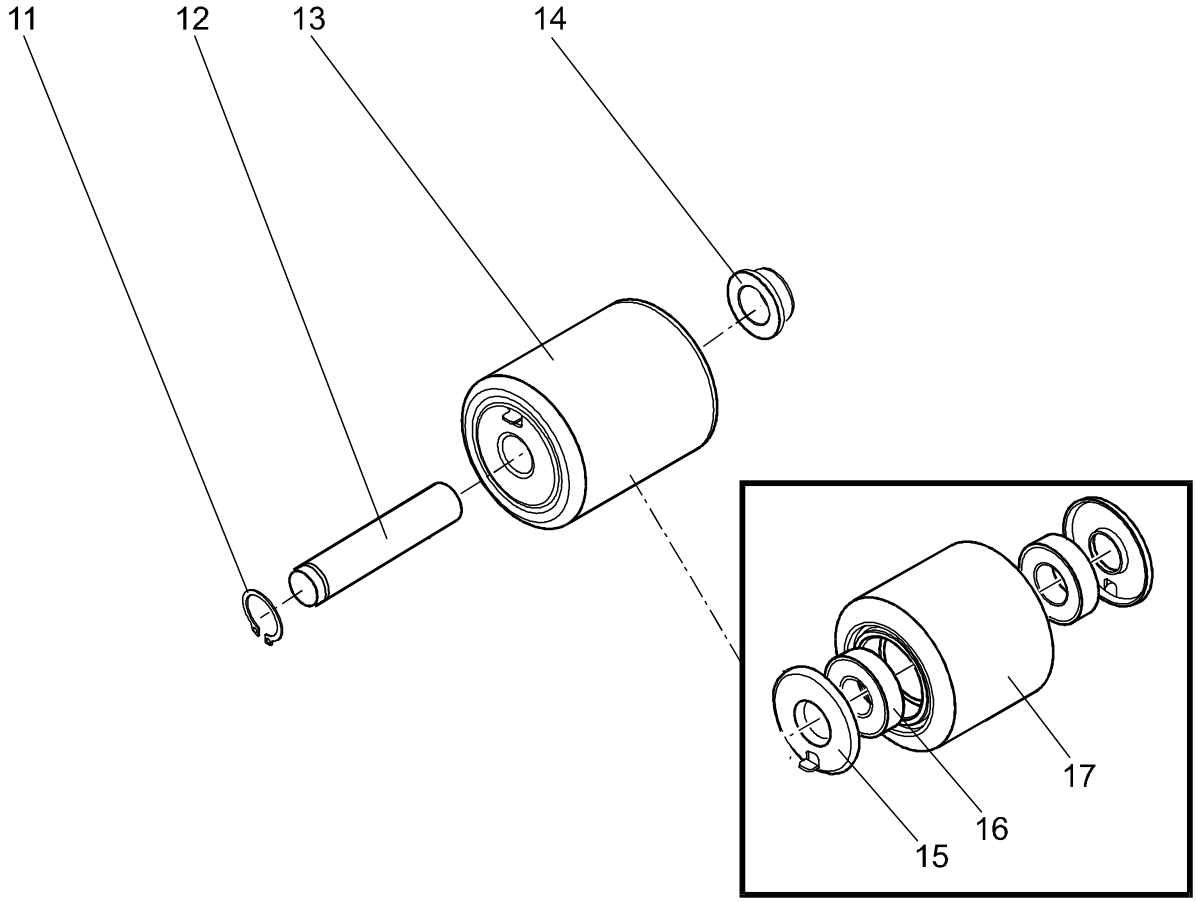

3500-020 Wheels

[1998-06-04]

Hjul; Räder; Roues

Singel wheel; Singelhjul; Einzelrad; Roue simple			595 SLL 16	292314 -
Pos	Description	Pcs	Part No	Note
11	Locking ring Spårring; Schliessring; Circlip	2	24000	
12	Axle Axel; Achse; Axe	2	154115	
12	Axle(Stainless Steel) Axel(Rostfri); Achse(Nichtrostende); Axe(Inoxydable)	2	154116	
13	Single wheel(Complete) Singelhjul(Komplett); Einzelrad(Komplett); Roue simple(Complet)	2	152344	
14	Bush Bussning; Bague; Bague	4	154117	
15	Sealing Tätning; Dichtung; Joint	4	150127	
16	Ball bearing Kullager; Kugellager; Roulement a billes	4	20906	
17	Wheel Hjul; Rad; Roue	2	150128-095	

© TOYOTA Industrial Equipment Europe SARL Ancenis, France

3500-021

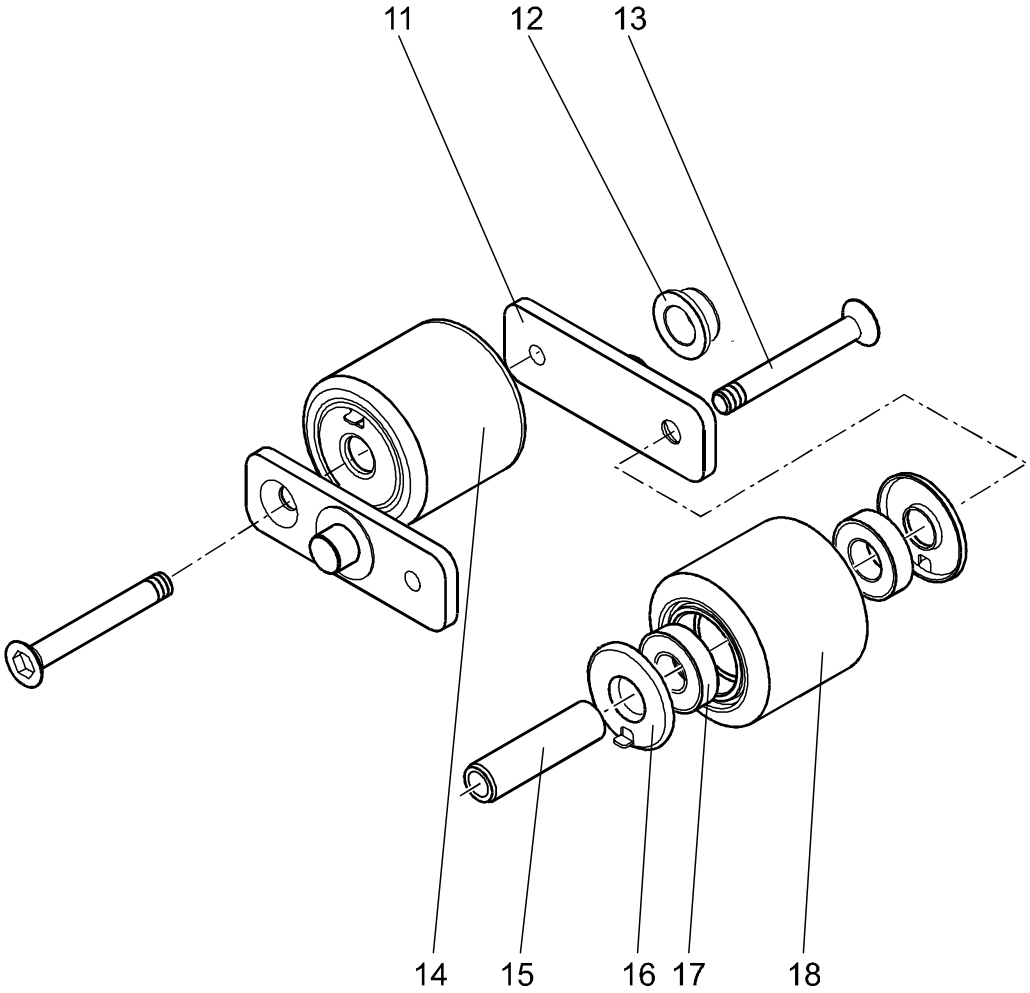

3500-021 Wheels

[1998-06-04]

Hjul; Räder; Roues

Bogiewheel; Boggiehjul; Boggirad; Roue bogie			595 SLL 16	292314 -
Pos	Description	Pcs	Part No	Note
11	Bracket Fäste; Halterung; Support	4	150115	
12	Bush Bussning; Bague; Bague	4	154703	
13	Screw Skruv; Schraube; Vis	4	150132	
14	Bogie wheel(Complete) Boggiehjul(Komplett); Boggirad(Komplett); Roue de fourche bogie(Complet)	4	150131-001	
15	Axle Axel; Achse; Axe	4	150126-076	
16	Sealing Tätning; Dichtung; Joint	8	150127	
17	Ball bearing Kullager; Kugellager; Roulement a billes	8	20906	
18	Wheel Hjul; Rad; Roue	4	150128-074	

© TOYOTA Industrial Equipment Europe SARL Ancenis, France

3530-019

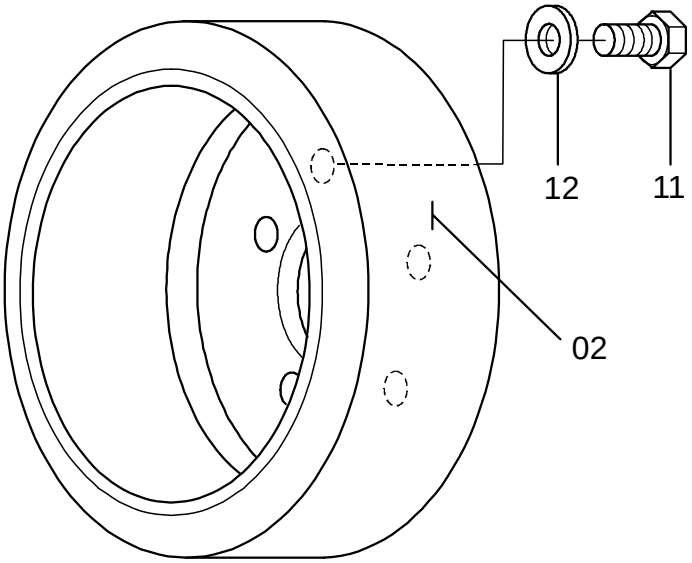

3530-019 Drive wheel

[1998-07-29]

Drivhjul; Antriebsrad; Roue motrice

			595 SLL 16	271117 -
Pos	Description	Pcs	Part No	Note
02	Drive wheel(Grooved) Drivhjul(Sajpad); Antriebrad(Gemustert); Roue entrainement(Sculpture)	1	121023-001	Rubber Gummi; Gummi; Gomme
02	Drive wheel(Elastomer) Drivhjul; Antriebrad; Roue entrainement	1	127352	
02	Drive wheel(Vulkollan) Drivhjul; Antriebrad; Roue entrainement	1	129920	Standard design Standardutförande; Normalausrüstung
02	Drive wheel(Tractothan) Drivhjul; Antriebrad; Roue entrainement	1	144341	
02	Drive wheel(Rubber) Drivhjul(Gummi); Antriebrad(Gummi); Roue entrainement(Gomme)	1	147214	
11	Screw Skruv; Schraube; Vis	5	110803	
12	Washer Bricka; Scheibe; Rondelle	5	21393	

© TOYOTA Industrial Equipment Europe SARL Ancenis, France

3540-021

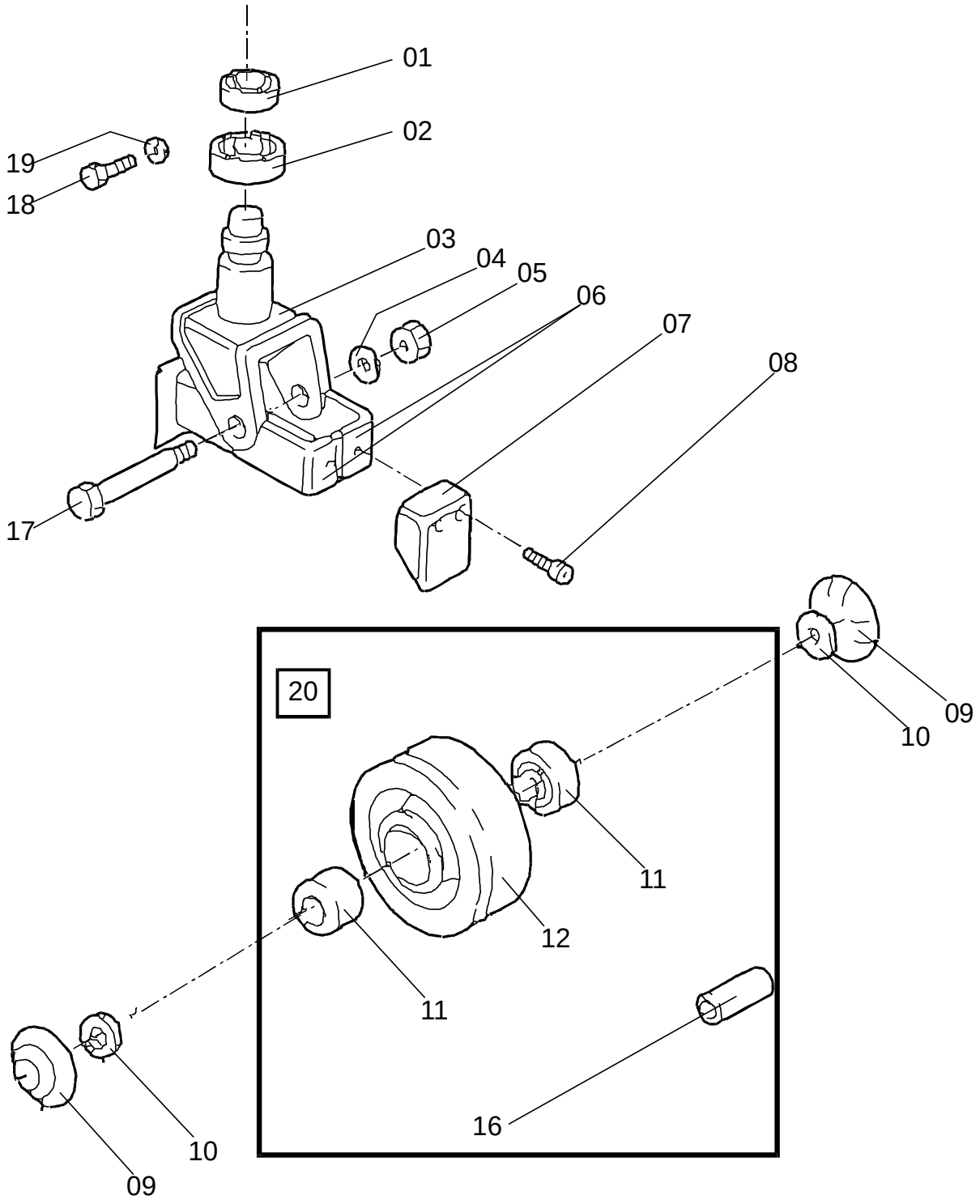

© TOYOTA Industrial Equipment Europe SARL Ancenis, France

3540-021 Support/castor wheels

[1998-03-14]

Stöd-/länkhjul; Stützräder/Gelenkrollen; Roues stabilisatrices/pivotantes

			595 SLL 16	271117 -
Pos	Description	Pcs	Part No	Note
01	Ball bearing Kullager; Kugellager; Roulement a billes	2	20908	
02	Ball bearing Kullager; Kugellager; Roulement a billes	2	22641	
03	Wheel fork Hjulgaffel; Radgabel; Fourche de roue	2	141654	
04	Washer Bricka; Scheibe; Rondelle	2	21394	
05	Nut Mutter; Mutter; Ecrou	2	20777	
06	Protection Skydd; Schutz; Protéege	4	138906	
07	Deflector Avvisare; Abweiser; Borne	4	49751	
08	Screw Skruv; Schraube; Vis	8	139248	
09	Hub cap Navkapsel; Nabenkappe; Capot de moyeu	4	145982	
10	Washer Bricka; Scheibe; Rondelle	4	145983	
11	Bearing Lager; Lager; Roulement	4	28484	
12	Wheel(Vulkollan) Hjul; Rad; Roue	2	46106	
16	Spacer Distanshylsa; Abstandhülse; Douille entretoise	2	30725	
17	Axle Axel; Achse; Axe	2	47751	
18	Screw Skruv; Schraube; Vis	2	21935	
19	Washer Bricka; Scheibe; Rondelle	2	21275	
20	Wheel complete(Vulkollan) Hjul komplett; Rad komplett; Roue complete	2	12252	

© TOYOTA Industrial Equipment Europe SARL Ancenis, France

4110-081

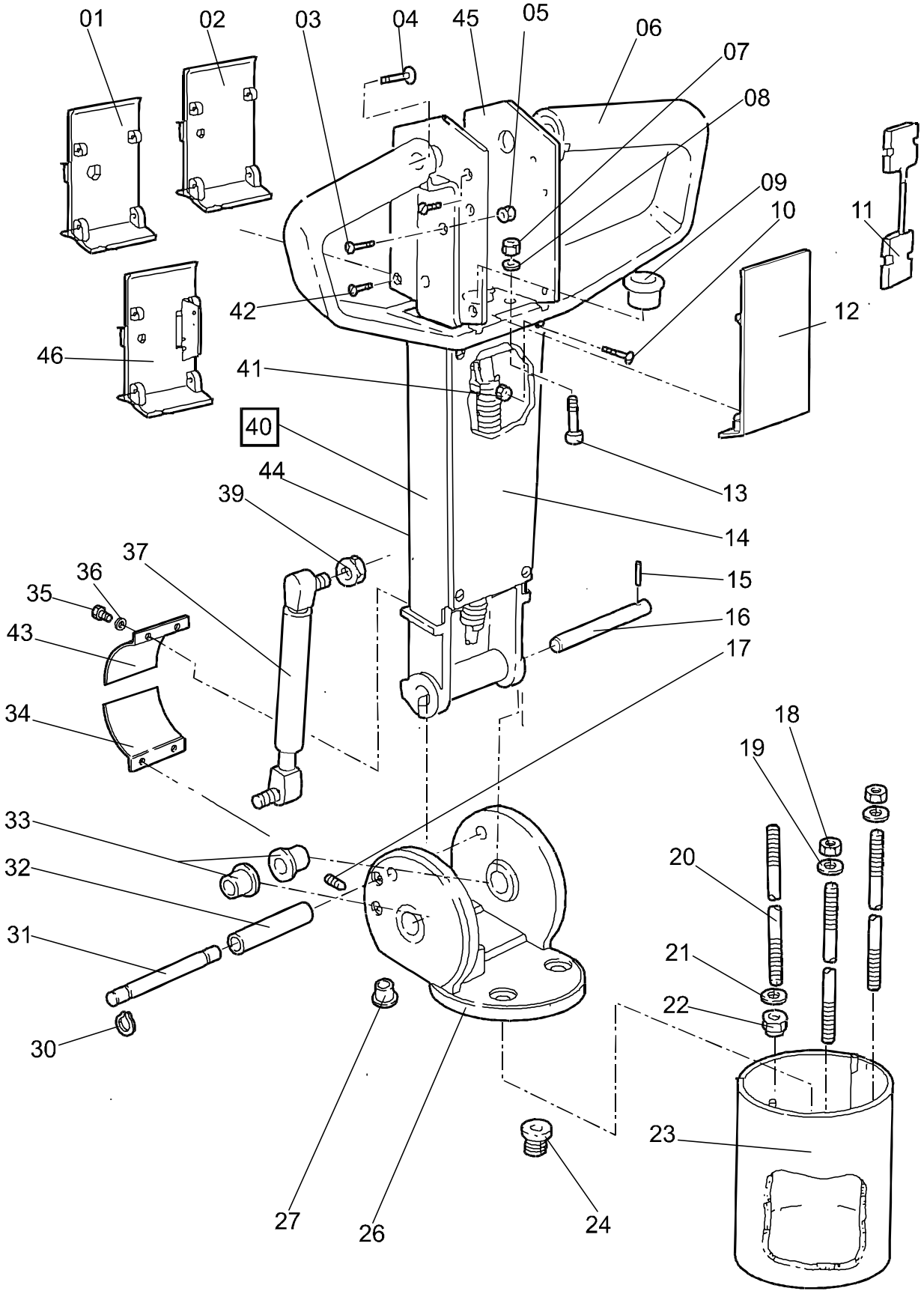

© TOYOTA Industrial Equipment Europe SARL Ancenis, France

4110-081 Steering arm / wheel / lever

[1999-05-07]

Styr- arm/ratt/spak; Deichsel, Lenkrad-hebel; Timon/volant/levier de direction

Machine with driver platform; Maskin med förarplattform; Maschine mit Fahrerplattform; Machine avec plateforme du conducteur	595 SLL 16 277198 -			
Pos	Description	Pcs	Part No	Note
01	Cap Lock; Deckel; Couvercle	1	142975	Cold stores Fryshus; Gefrieranlage; Chambre frigorifique
02	Cap Lock; Deckel; Couvercle	1	142252	
03	Screw Skruv; Schraube; Vis	8	28545	
04	Screw Skruv; Schraube; Vis	2	24470	
05	Nut Mutter; Mutter; Ecrou	2	25437	
06	Handle Handtag; Handgriff; Poignée.	1	141846	
07	Nut Mutter; Mutter; Ecrou	2	20016	
08	Washer Bricka; Scheibe; Rondelle	2	20404	
09	Guide Genomföring; Durcgführung; Guide	1	21957	
10	Screw Skruv; Schraube; Vis	4	28545	
11	Heater(With wiring harness) Värmare(Med kablage); Heizer(Mit Kabelsatz); Calorie(Avec Câblage)	1	153396	Cold stores Fryshus; Gefrieranlage; Chambre frigorifique
12	Cap Lock; Deckel; Couvercle	1	142250	
13	Screw Skruv; Schraube; Vis	2	20276	
14	Cap Lock; Deckel; Couvercle	1	141816	
15	Locking pin Spännstift; Spannstift; Goupille	1	22128	
16	Axle Axel; Achse; Axe	1	101202	
17	Screw Skruv; Schraube; Vis	1	28338	
18	Nut Mutter; Mutter; Ecrou	2	20130	
19	Washer Bricka; Scheibe; Rondelle	2	21393	
20	Stud screw Pinnskruv; Stiftschraube; Prisonnier	3	142817-001	240 Ah
20	Stud screw Pinnskruv; Stiftschraube; Prisonnier	3	142817-003	320 Ah
20	Stud screw Pinnskruv; Stiftschraube; Prisonnier	3	142817-004	280 Ah
21	Washer Bricka; Scheibe; Rondelle	1	21393	
22	Nut Mutter; Mutter; Ecrou	1	20130	
23	Distance pipe Distansrör; Abstandsrohr; Tube entretoise	1	118571-002	240 Ah
23	Distance pipe Distansrör; Abstandsrohr; Tube entretoise	1	142797-003	320 Ah
23	Distance pipe Distansrör; Abstandsrohr; Tube entretoise	1	142797-004	280 Ah
24	Guide Genomföring; Durcgführung; Guide	1	130184	
26	Bracket Fäste; Halterung; Support	1	126829	

© TOYOTA Industrial Equipment Europe SARL Ancenis, France

Pos	Description	Pcs	Part No	Note
27	Guide Genomföring; Durcgführung; Guide	1	21957	
30	Locking ring Spårring; Schliessring; Circlip	1	23024	
31	Pin Pinne; Stäbchen; Cheville	1	101203	
32	Sleeve Hylsa; Hülse; Douille	1	101201	
33	Bush Bussning; Bague; Bague	2	140174	
34	Cap(lower) Lock(nedre); Deckel(unter); Couvercle(inférieur)	1	134031	
35	Screw Skruv; Schraube; Vis	4	20050	
36	Washer Bricka; Scheibe; Rondelle	4	20404	
37	Gas suspension(400 Newton) Gasfjäder(400 N); Gasfederung(400 N); Suspension à gaz(400 N)	1	122314-084	
39	Nut Mutter; Mutter; Ecrou	1	21110	
40	Operating arm complete Manöverarm komplett; Steuerarm komplett; Boutier de timon complete	1	150334	
41	Nut Mutter; Mutter; Ecrou	4	118316-006	
42	Screw Skruv; Schraube; Vis	10	20867	
43	Cap(upper) Lock(övre); Deckel(obere); Couvercle(supérieur)	1	134030	
44	Arm Arm; Arm; Bras	1	142764-001	
45	Operating arm housing Manöverarmshus; Steuerarm Gehäuse; Boîtier de timon commande	1	141950	
46	Cap Lock; Deckel; Couvercle	1	142251	Electric lifting / sinking Elektrisk lyft / sänkning; Elektrische hebe / senkung; Levage / dépression de electrique

© TOYOTA Industrial Equipment Europe SARL Ancenis, France

© TOYOTA Industrial Equipment Europe SARL Ancenis, France

4110-082

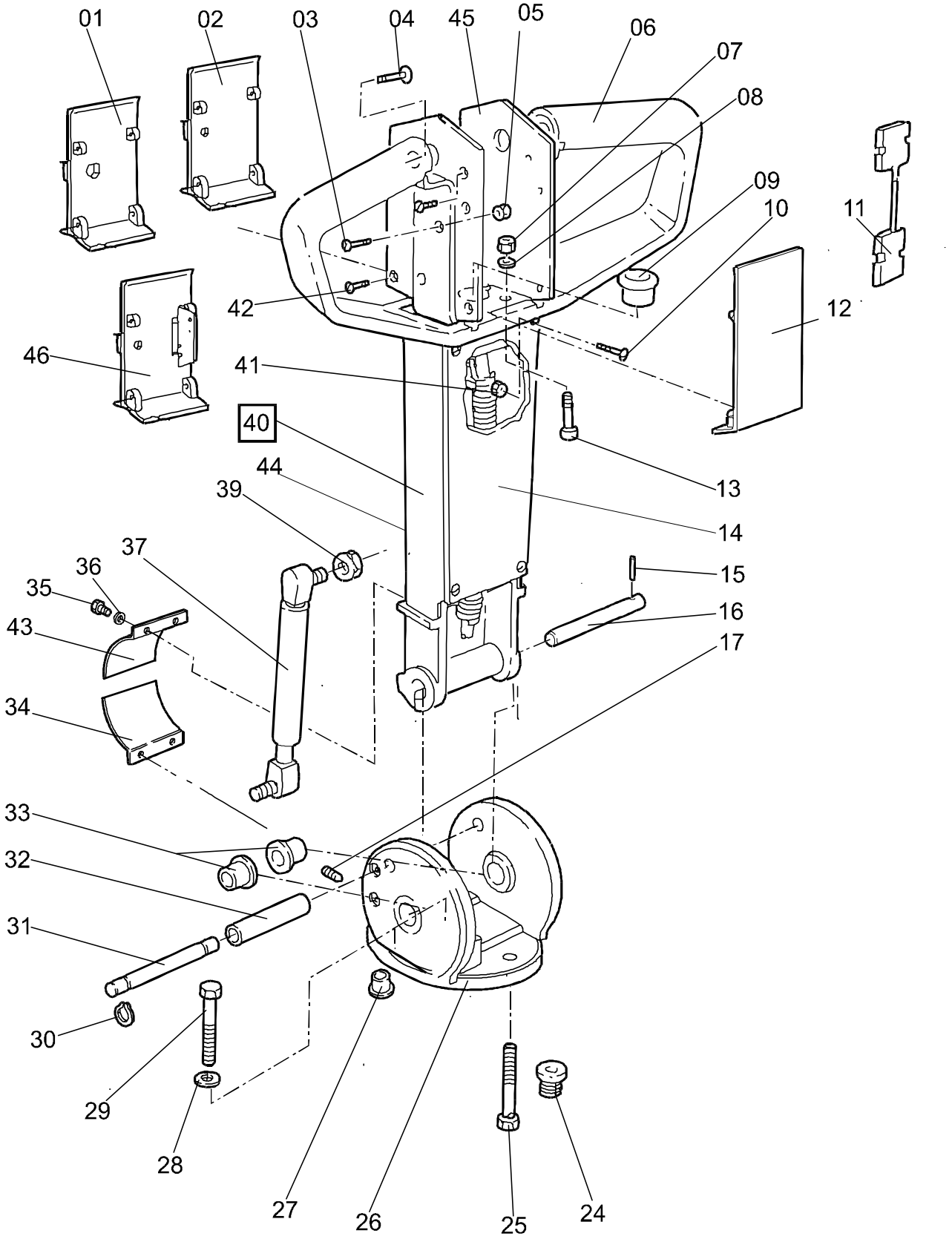

© TOYOTA Industrial Equipment Europe SARL Ancenis, France

4110-082 Steering arm / wheel / lever

[1999-05-07]

Styr- arm/ratt/spak; Deichsel, Lenkrad-hebel; Timon/volant/levier de direction

Machine without driver platform; Maskin utan förarplattform; Maschine exkl. Fahrerplattform; Machine excl. plateforme du conducteur	595 SLL 16 277198 -			
Pos	Description	Pcs	Part No	Note
01	Cap Lock; Deckel; Couvercle	1	142975	Cold stores Fryshus; Gefrieranlage; Chambre frigorifique
02	Cap Lock; Deckel; Couvercle	1	142252	
03	Screw Skruv; Schraube; Vis	8	28545	
04	Screw Skruv; Schraube; Vis	2	24470	
05	Nut Mutter; Mutter; Ecrou	2	25437	
06	Handle Handtag; Handgriff; Poignée.	1	141846	
07	Nut Mutter; Mutter; Ecrou	2	20016	
08	Washer Bricka; Scheibe; Rondelle	2	20404	
09	Guide Genomföring; Durcgführung; Guide	1	21957	
10	Screw Skruv; Schraube; Vis	4	28545	
11	Heater(With wiring harness) Värmare(Med kablage); Heizer(Mit Kabelsatz); Calorie(Avec Câblage)	1	153396	Cold stores Fryshus; Gefrieranlage; Chambre frigorifique
12	Cap Lock; Deckel; Couvercle	1	142250	
13	Screw Skruv; Schraube; Vis	2	20276	
14	Cap Lock; Deckel; Couvercle	1	141932	
15	Locking pin Spännstift; Spannstift; Goupille	1	22128	
16	Axle Axel; Achse; Axe	1	101202	
17	Screw Skruv; Schraube; Vis	1	28338	
24	Guide Genomföring; Durcgführung; Guide	1	130184	
25	Screw Skruv; Schraube; Vis	1	28344	
26	Bracket Fäste; Halterung; Support	1	126830	
27	Guide Genomföring; Durcgführung; Guide	1	21957	
28	Washer Bricka; Scheibe; Rondelle	2	21393	
29	Screw Skruv; Schraube; Vis	2	20044	
30	Locking ring Spårring; Schliessring; Circlip	1	23024	
31	Pin Pinne; Stäbchen; Cheville	1	101203	
32	Sleeve Hylsa; Hülse; Douille	1	101201	
33	Bush Bussning; Bague; Bague	2	140174	
34	Cap(lower) Lock(nedre); Deckel(unter); Couvercle(inférieur)	1	134031	
35	Screw Skruv; Schraube; Vis	4	20050	

© TOYOTA Industrial Equipment Europe SARL Ancenis, France

Pos	Description	Pcs	Part No	Note
36	Washer Bricka; Scheibe; Rondelle	4	20404	
37	Gas suspension(500 Newton) Gasfjäder; Gasfederung; Suspension à gaz	1	122314-085	
39	Nut Mutter; Mutter; Ecrou	1	21110	
40	Operating arm complete Manöverarm komplett; Steuerarm komplett; Boutier de timon complete	1	150335	
41	Nut Mutter; Mutter; Ecrou	4	118316-006	
42	Screw Skruv; Schraube; Vis	10	20867	
43	Cap(upper) Lock(övre); Deckel(obere); Couvercle(supérieur)	1	134030	
44	Arm Arm; Arm; Bras	1	142764-002	
45	Operating arm housing Manöverarmshus; Steuerarm Gehäuse; Boîtier de timon commande	1	141950	
46	Cap Lock; Deckel; Couvercle	1	142251	Extra lifting / sinking Extra lyft / sänkning; Extra hebe / senkung; Extralevage / d'epression

© TOYOTA Industrial Equipment Europe SARL Ancenis, France

© TOYOTA Industrial Equipment Europe SARL Ancenis, France

5160-025

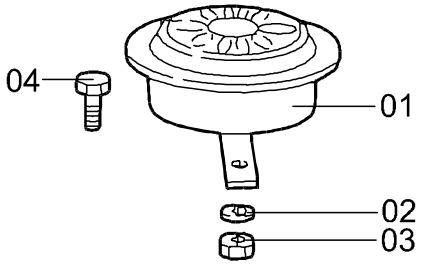

5160-025 General alarm signals (audible/visual) [1998-02-07]

Signal/larm (ljud-/ljus-); Warn-/Alarmsignale (Aukust./Opt.); Avertisseur (sonore/lumineux), dispositifs d'alarme

			595 SLL 16	294080 -
Pos	Description	Pcs	Part No	Note
01	Horn Signalhorn; Signalhorn; Avertisseur	1	144942	
02	Washer Bricka; Scheibe; Rondelle	1	21275	
03	Nut Mutter; Mutter; Ecrou	1	20081	
04	Screw Skruv; Schraube; Vis	1	20078	

© TOYOTA Industrial Equipment Europe SARL Ancenis, France

5190-019

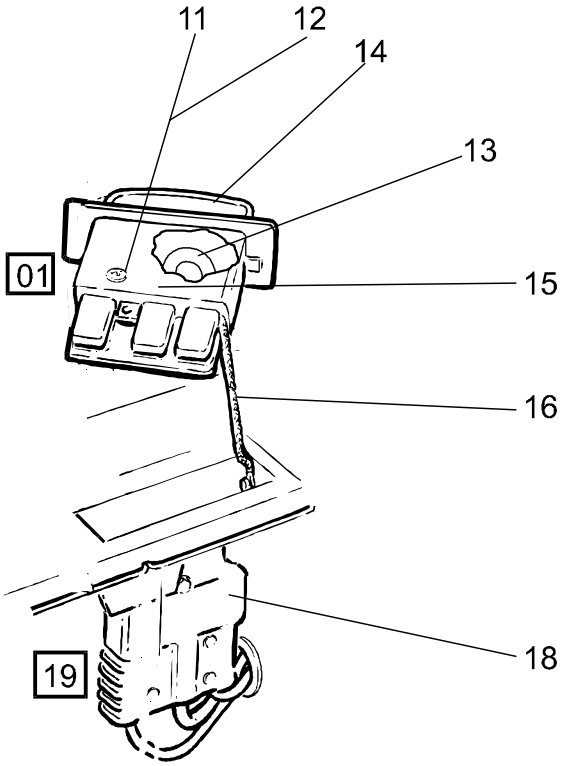

5190-019 Battery cut out connector/contactor [1998-08-07]

Batterifrånskiljare, huvudkontaktor; Batterietrennung, Hauptkontaktor; Coupe-circuit de batterie, contacteur

			595 SLL 16	285755 -
Pos	Description	Pcs	Part No	Note
01	Connector socket Kabelhandske; Leistungverbinder; Connexion socle.	1	127486	Complete Komplett; Komplett; Complet
11	Screw Skruv; Schraube; Vis	2	26956	
12	Nut Mutter; Mutter; Ecrou	2	26957	
13	Cable Kabel; Kabel; Câble	1	127487	
14	Handle Handtag; Handgriff; Poignée.	1	127482	
15	Connector Handske; Stecker; Bloc de connexion	1	127483	
16	Wire Wire; Drahtseil; Filament	1	127488	
18	Connector Handske; Stecker; Bloc de connexion	1	127484	
19	Battery connector with cable complete(lower) Batterihandske med kabel komplett(nedre); Stromstecker mit Kabel komplett(unter); Connection fiche avec câble complete(inférieur)	1	150343	

© TOYOTA Industrial Equipment Europe SARL Ancenis, France

5200-007

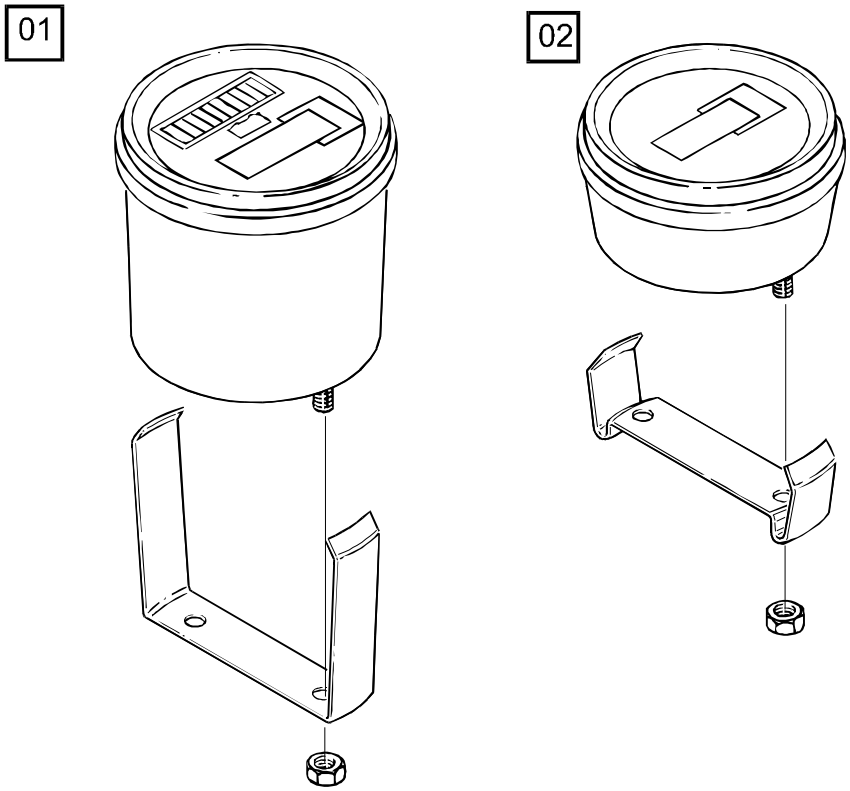

5200-007 Instrument panel, display

[1998-07-31]

Instrumentpanel, display; Instrumentpanel, Display; Tableau de bord, afficheur

			595 SLL 16	285755 -
Pos	Description	Pcs	Part No	Note
01	Battery indicator Batteriindikator; Batterienindikator; Indicateur de batterie	1	132776	Complete Komplett; Komplett; Complet
02	Hour recorder(Complete) Timmätare(Komplett); Stundenzähler(Komplett); Compte hevres(Complet)		134754	

© TOYOTA Industrial Equipment Europe SARL Ancenis, France

© TOYOTA Industrial Equipment Europe SARL Ancenis, France

5310-025

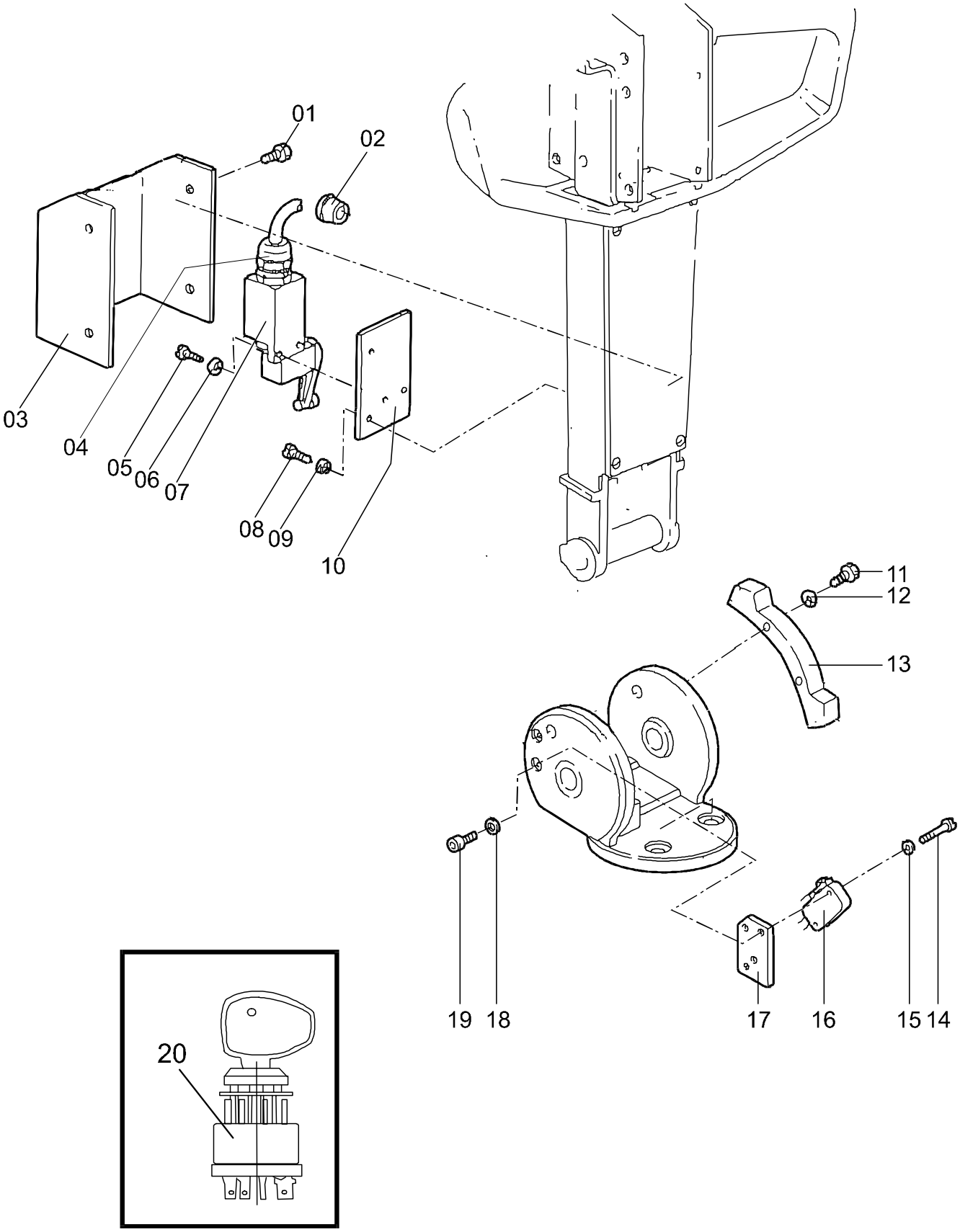

© TOYOTA Industrial Equipment Europe SARL Ancenis, France

5310-025 Start/stop switch

[1998-02-03]

Start/stoppströmställare; Schalter Fahren/Anhalten; Interrupteur (coupe-circuit) démarrage/arrêt

			595 SLL 16	271117 -
Pos	Description	Pcs	Part No	Note
01	Screw Skruv; Schraube; Vis	4	28835	Cold stores Fryshus; Gefrieranlage; Chambre frigorifique
02	Guide(Rubber) Genomföring(Gummi); Durcgführung(Gummi); Guide(Gomme)	1	22687	Cold stores Fryshus; Gefrieranlage; Chambre frigorifique
03	Cap Lock; Deckel; Couvercle	1	142934	Cold stores Fryshus; Gefrieranlage; Chambre frigorifique
04	Fitting Förskruvning; Verschraubung; Presse-étoupe	1	27659	Cold stores Fryshus; Gefrieranlage; Chambre frigorifique
05	Screw Skruv; Schraube; Vis	2	27872	Cold stores Fryshus; Gefrieranlage; Chambre frigorifique
06	Washer Bricka; Scheibe; Rondelle	2	21317	Cold stores Fryshus; Gefrieranlage; Chambre frigorifique
07	Switch Brytare; Schalter; Rupteur	1	26864	Cold stores Fryshus; Gefrieranlage; Chambre frigorifique
08	Screw Skruv; Schraube; Vis	2	28835	Cold stores Fryshus; Gefrieranlage; Chambre frigorifique
09	Washer Bricka; Scheibe; Rondelle	2	21317	Cold stores Fryshus; Gefrieranlage; Chambre frigorifique
10	Plate Plåt; Platte; Plaque	1	126088	Cold stores Fryshus; Gefrieranlage; Chambre frigorifique
11	Screw Skruv; Schraube; Vis	2	20250	Cold stores Fryshus; Gefrieranlage; Chambre frigorifique
12	Washer Bricka; Scheibe; Rondelle	2	21307	Cold stores Fryshus; Gefrieranlage; Chambre frigorifique
13	Cam Nock; Nocken; Came	1	130528	Cold stores Fryshus; Gefrieranlage; Chambre frigorifique
14	Screw Skruv; Schraube; Vis	2	22256	
15	Washer Bricka; Scheibe; Rondelle	2	21392	
16	Switch Brytare; Schalter; Rupteur	1	28441	
17	Bracket Fäste; Halterung; Support	1	134218	
18	Washer Bricka; Scheibe; Rondelle	2	21392	
19	Screw Skruv; Schraube; Vis	2	22256	
20	Ignition switch Startlås; Zündschloss; Contact-démarreur	1	26701	8 km / h
20	Ignition switch Startlås; Zündschloss; Contact-démarreur	1	28554	

© TOYOTA Industrial Equipment Europe SARL Ancenis, France

5330-029

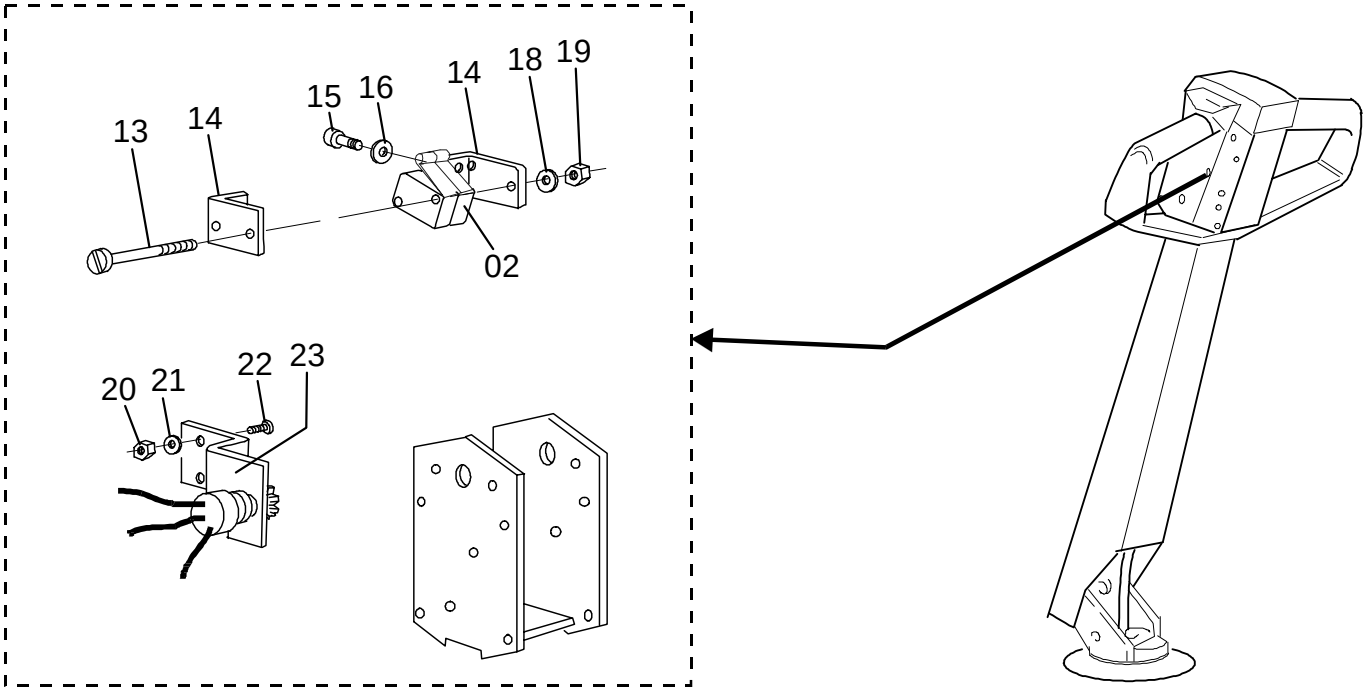

5330-029 Speed control

[1998-11-20]

Fartreglering; Geschwindigkeitsreglung; Régulation de vitesse

			595 SLL 16 329000 -	
Pos	Description	Pcs	Part No	Note
02	Micro switch Mikrobrytare; Mikroschalter; Interrupteurs	2	156279	
13	Screw Skruv; Schraube; Vis	2	20720	
14	Bracket Fäste; Halterung; Support	1	134065	
15	Screw Skruv; Schraube; Vis	4	21134	
16	Washer Bricka; Scheibe; Rondelle	4	21392	
18	Washer Bricka; Scheibe; Rondelle	2	21392	
19	Nut Mutter; Mutter; Ecrou	2	20255	
20	Nut Mutter; Mutter; Ecrou	2	20235	
21	Washer Bricka; Scheibe; Rondelle	2	20236	
22	Screw Skruv; Schraube; Vis	2	24354	
23	Potentiometer(Complete) Potentiometer(Komplett); Potentiometer(Komplett); Potentiometre(Complet)	1	166303	

© TOYOTA Industrial Equipment Europe SARL Ancenis, France

© TOYOTA Industrial Equipment Europe SARL Ancenis, France

5390-077

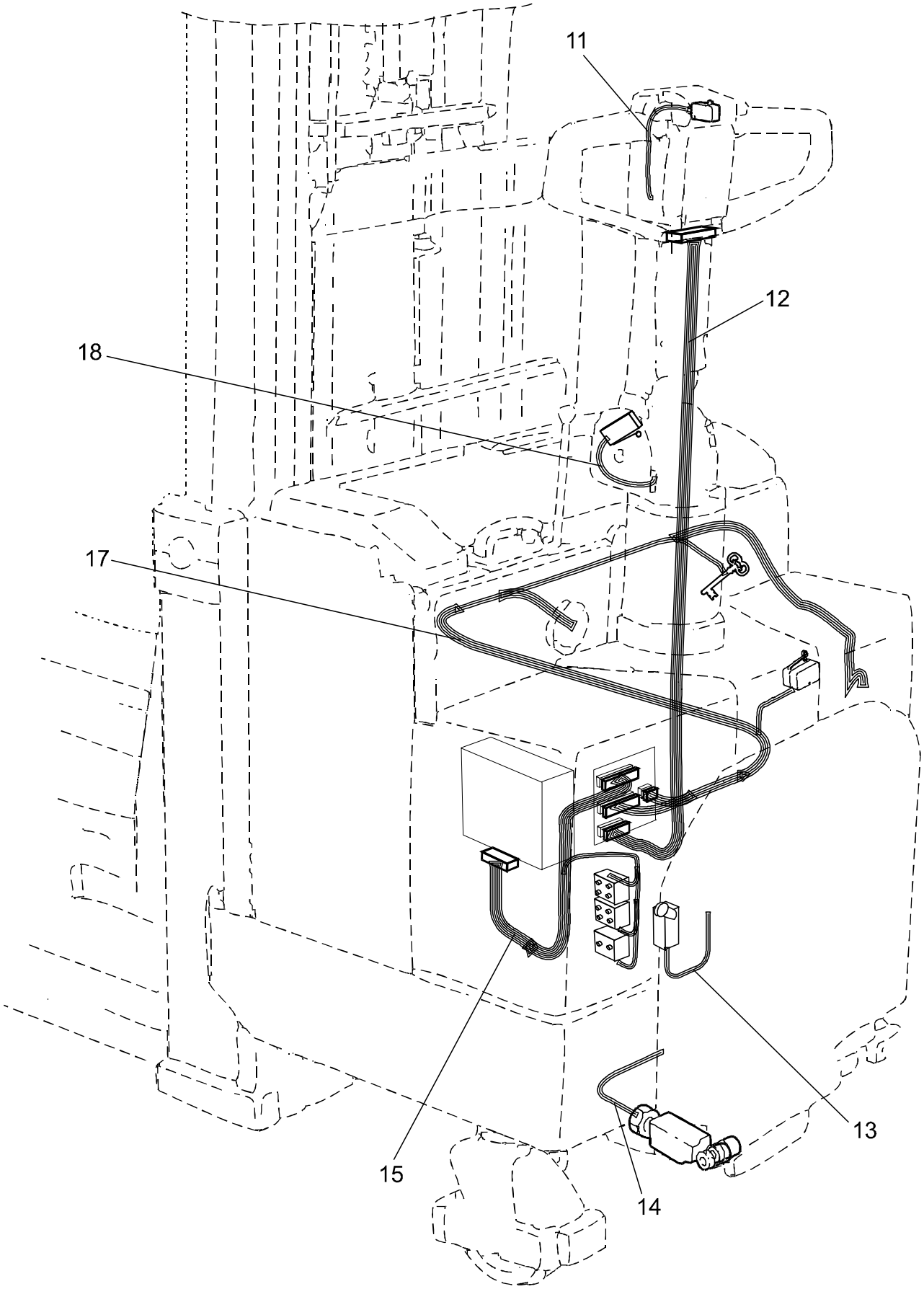

© TOYOTA Industrial Equipment Europe SARL Ancenis, France

5390-077 Driving function harnesses/ fuse [1998-07-28]

Åkfunktionskablage/-säkring; Verkabelung, Sicherung Fahrfunktion; Câblage/ fusible fonction de déplacement

			595 SLL 16	310750 -
Pos	Description	Pcs	Part No	Note
11	Wiring harness Kablage; Kabelsatz; Câblage	1	150312	
12	Wiring harness Kablage; Kabelsatz; Câblage	1	149312	
13	Wiring harness Kablage; Kabelsatz; Câblage	1	149318	Powertrac
14	Wiring harness(Including switch) Kablage(Inklusive brytare); Kabelsatz(Inklusive Shalter); Câblage(Inclus Rupteur)	1	164624	8 km / h
15	Wiring harness Kablage; Kabelsatz; Câblage	1	149313	
17	Wiring harness Kablage; Kabelsatz; Câblage	1	149314	
18	Wiring harness Kablage; Kabelsatz; Câblage	1	149316-001	Machine without driver platform Maskin utan förarplattform; Maschine exkl. Fahrerplattform; Machine excl. plateforme du conducteur
18	Wiring harness Kablage; Kabelsatz; Câblage	1	149316-002	Machine with driver platform Maskin med förarplattform; Maschine mit Fahrerplattform; Machine avec plateforme du conducteur

© TOYOTA Industrial Equipment Europe SARL Ancenis, France

5430-044

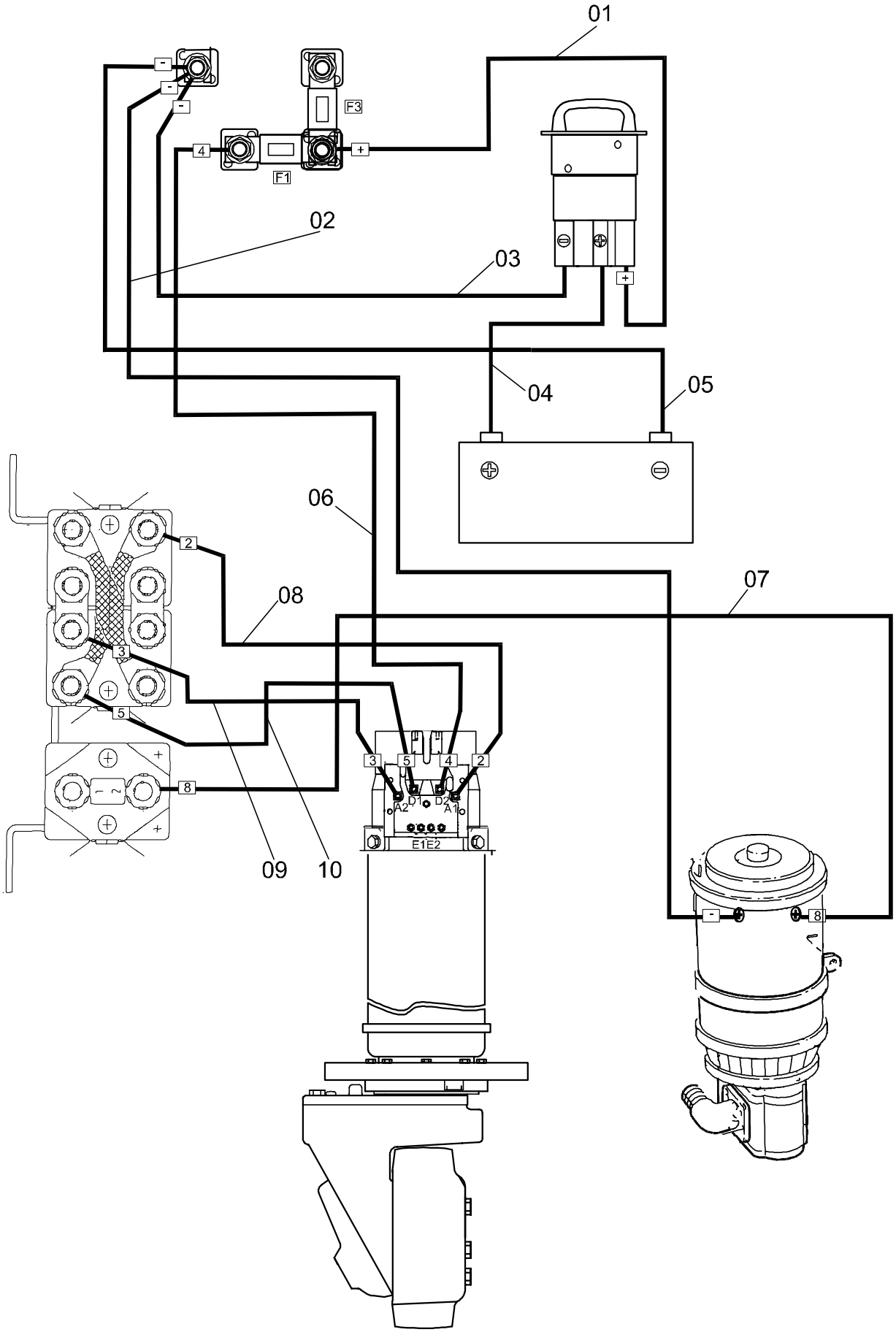

© TOYOTA Industrial Equipment Europe SARL Ancenis, France

5430-044 Drive motor cables/resistors/fuses

[1998-06-23]

Drivmotorkablar/-motstånd/-säkring; Fahrmotorkabel/-widerstand/-sicherung; Câbles/résitances/fusible moteur de traction

			595 SLL 16	310750 -
Pos	Description	Pcs	Part No	Note
01	Cable Kabel; Kabel; Câble	1	150342	
02	Cable Kabel; Kabel; Câble	1	150318	
03	Cable Kabel; Kabel; Câble	1	150341	
04	Cable Kabel; Kabel; Câble	1	127878	
05	Cable Kabel; Kabel; Câble	1	151303	
06	Cable Kabel; Kabel; Câble	1	150319	
07	Cable Kabel; Kabel; Câble	1	150317	
08	Cable Kabel; Kabel; Câble	1	151298	
09	Cable Kabel; Kabel; Câble	1	151299	
10	Cable Kabel; Kabel; Câble	1	151300	

© TOYOTA Industrial Equipment Europe SARL Ancenis, France

5440-010

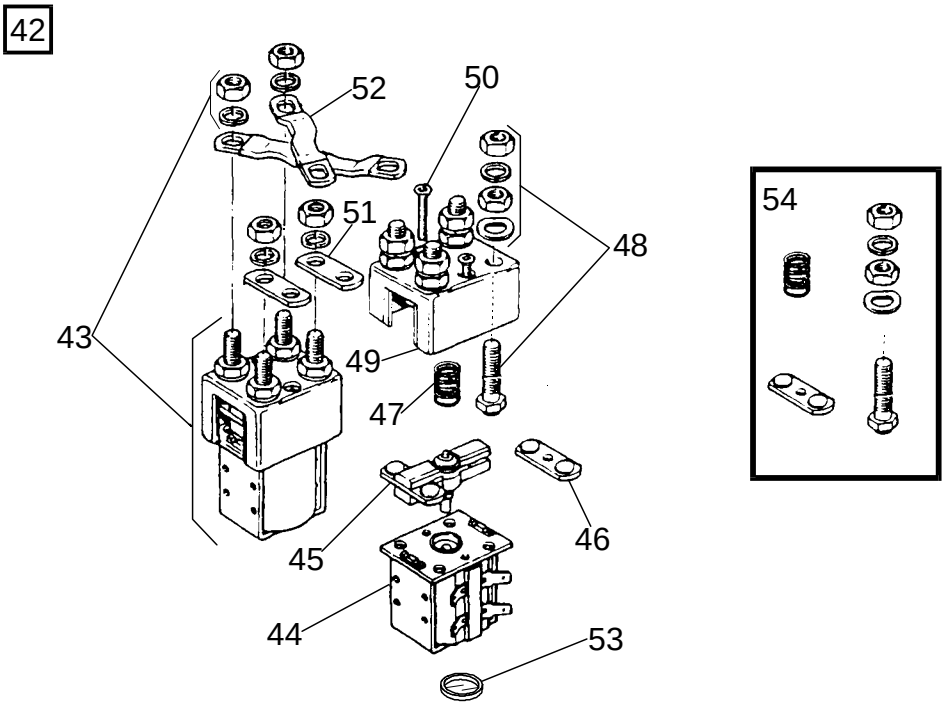

5440-010 Direction contactors

[1999-05-31]

Riktningskontaktorer; Richtungskontaktoren; Contacteurs de direction

			595 SLL 16	294080 -
Pos	Description	Pcs	Part No	Note
42	Travel direction contactor(Complete) Åkriktningskontaktor(Komplett); Fahrrichtungskontaktor(Komplett); Contactu-ers de sens de marche(Complet)	1	154559	
43	Contactor Kontaktor; Kontaktor; Contacteur	2	154626	
44	Magnetic coil Magnetspole; Magnetspule; Bobine électrique	2	154554	
45	Moving contact holder (less contacts) Rörlig kontakthållare (utan kontakter); Beweglicher Kontakthalter (ohne Kon-takten); Support de contact mobile (sans contact)	2	154561	
46	Contact Kontakt; Kontakt; Contact	4	154562	
47	Spring Fjäder; Feder; Ressort	2	154552	
48	Fixed contact(Complete) Fast kontakt(Komplett); Fester Kontakt(Komplett); Contact fixé(Complet)	8	154551	
49	Housing Kåpa; Haus; Chape	2	154560	
50	Screw Skruv; Schraube; Vis	4	154549	
51	Copper bar Kopparskena; Kupferstab; Plaque de cuivre	2	154563	
52	Copper bar Kopparskena; Kupferstab; Plaque de cuivre	2	154564	
53	Housing Kåpa; Haus; Chape	2	165416	
54	Contact set Kontaktsats; Kontaktsatz; Jeux de contact	1	169213	

© TOYOTA Industrial Equipment Europe SARL Ancenis, France

5510-035

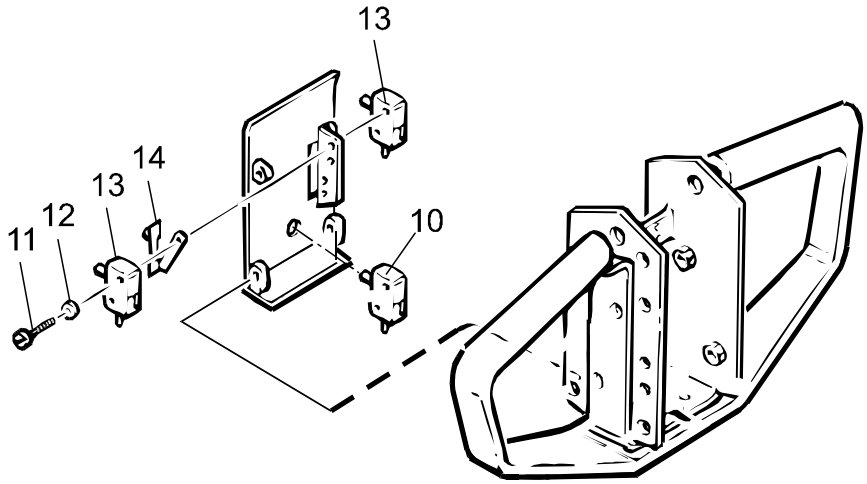

5510-035 Work function micro switches, potentiometers [1998-07-30]

Arbetsfunktionsbrytare/-potentiometer; Schalter/Potentiometer Arbeitsfunktion; Rupteurs (switchs)/ potentiomètres

			595 SLL 16	277234 -
Pos	Description	Pcs	Part No	Note
10	Micro switch Mikrobrytare; Mikroschalter; Interrupteurs	1	21945	
11	Screw Skruv; Schraube; Vis	4	23638	Electric lifting / sinking Elektrisk lyft / sänkning; Elektrische hebe / senkung; Levage / dépression de electrique
12	Washer Bricka; Scheibe; Rondelle	4	21392	Electric lifting / sinking Elektrisk lyft / sänkning; Elektrische hebe / senkung; Levage / dépression de electrique
13	Micro switch Mikrobrytare; Mikroschalter; Interrupteurs	2	156278	Electric lifting / sinking Elektrisk lyft / sänkning; Elektrische hebe / senkung; Levage / dépression de electrique
14	Operating device Manöverdon; Steuerungsvorrichtung; Bras de commande	2	156919	Electric lifting / sinking Elektrisk lyft / sänkning; Elektrische hebe / senkung; Levage / dépression de electrique

© TOYOTA Industrial Equipment Europe SARL Ancenis, France

5510-036

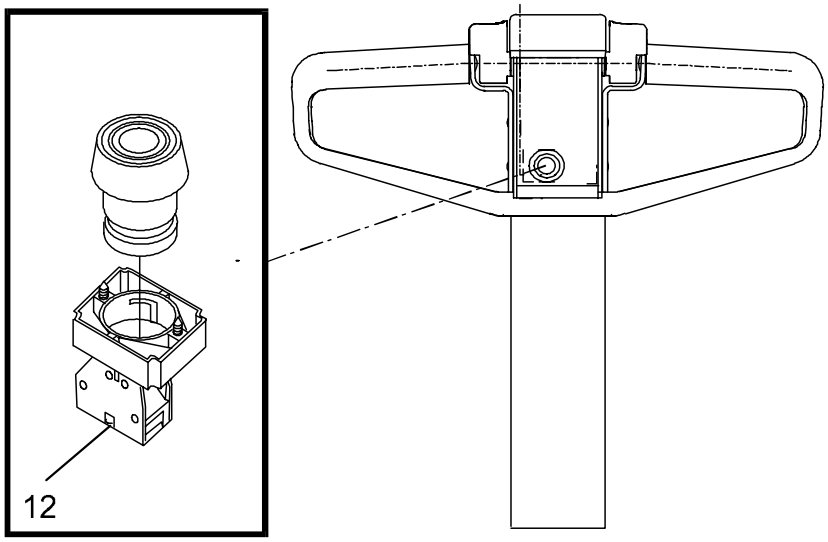

5510-036 Work function micro switches, potentiometers [1998-07-28]

Arbetsfunktionsbrytare/-potentiometer; Schalter/Potentiometer Arbeitsfunktion; Rupteurs (switchs)/ potentiomètres

Cold stores; Fryshus; Gefrieranlage; Chambre frigorifique			595 SLL 16	277234 -
Pos	Description	Pcs	Part No	Note
12	Contact device Kontaktblock; Kontakteinheit; Unite de contact	1	25624	

© TOYOTA Industrial Equipment Europe SARL Ancenis, France

5610-008

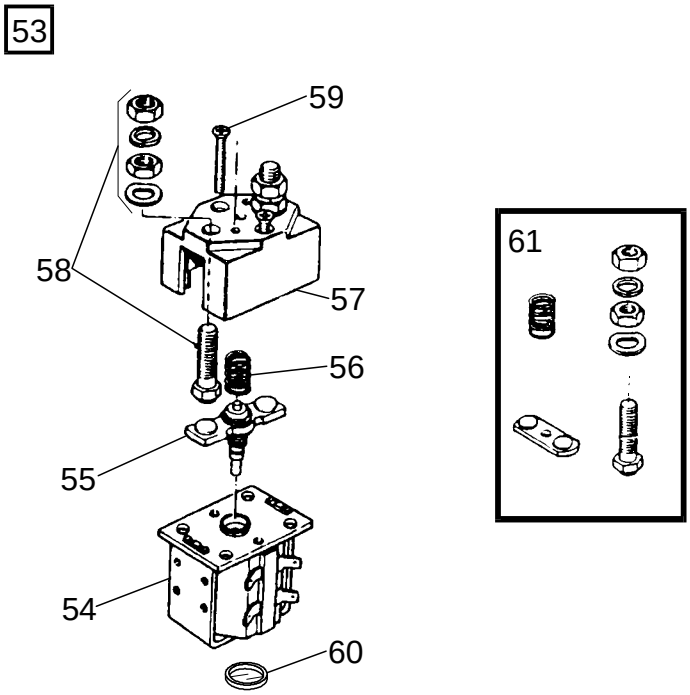

5610-008 Pump contactor

[1999-05-31]

Pumpkontaktor; Pumpenmotorkontaktor; Contacteur (moteur) de pompe

			595 SLL 16	294080 -
Pos	Description	Pcs	Part No	Note
53	Contactor Kontaktor; Kontaktor; Contacteur	1	154548	
54	Magnetic coil Magnetspole; Magnetspule; Bobine électrique	1	154554	
55	Contact Kontakt; Kontakt; Contact	1	154553	
56	Spring Fjäder; Feder; Ressort	1	154552	
57	Housing Kåpa; Haus; Chape	1	154550	
58	Fixed contact(Complete) Fast kontakt(Komplett); Fester Kontakt(Komplett); Contact fixé(Complet)	2	154551	
59	Screw Skruv; Schraube; Vis	2	154549	
60	Housing Kåpa; Haus; Chape	1	165416	
61	Contact set Kontaktsats; Kontaktsatz; Jeux de contact	1	169214	

© TOYOTA Industrial Equipment Europe SARL Ancenis, France

5710-027

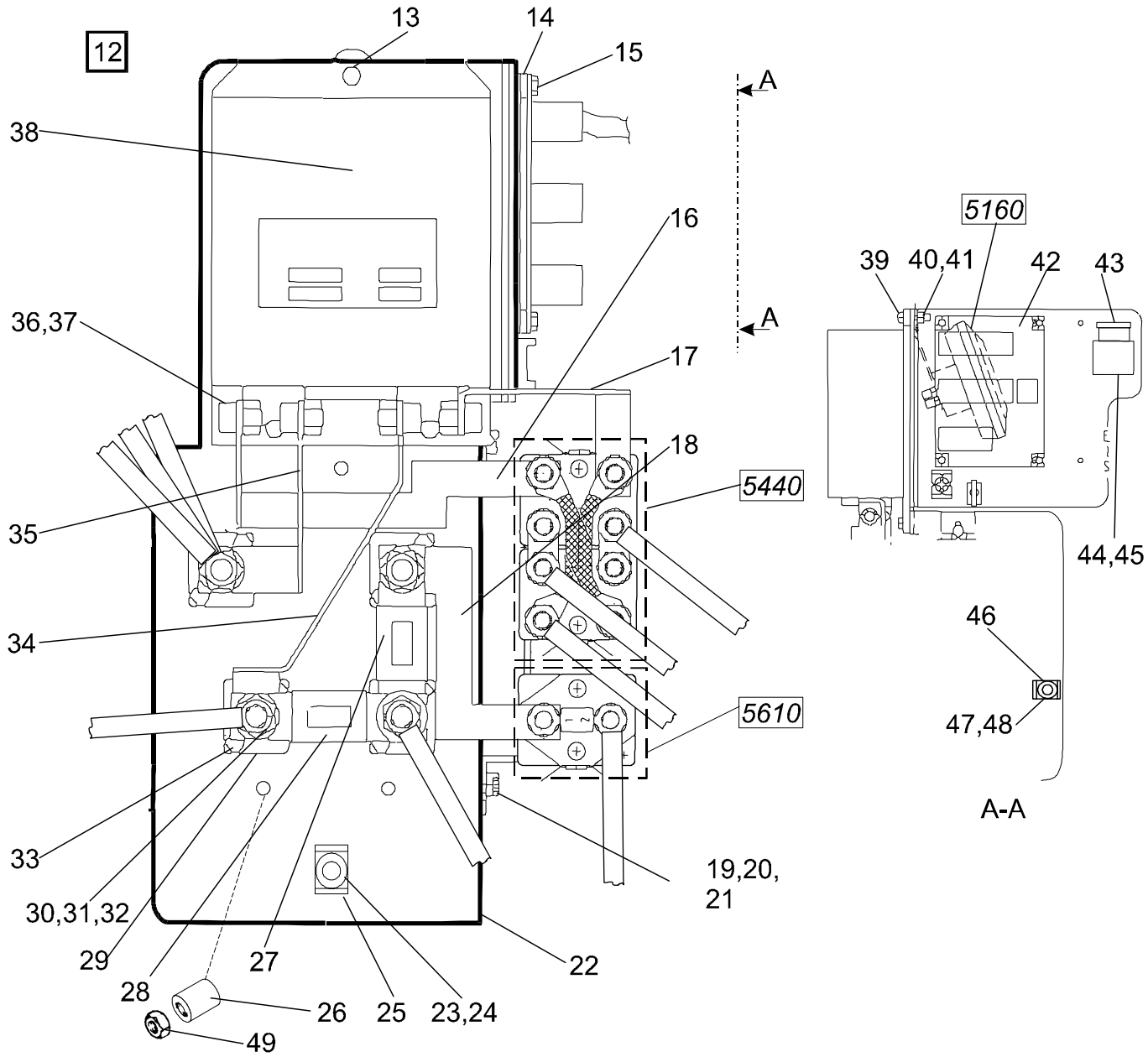

5710-027 Drive/multi-function PCBs

[1998-08-10]

Elektronikkort åkning/kombination; Elektronikkarten Fahren/kombination; Cartes électroniques déplacement/combinaison

			595 SLL 16 310750 -	
Pos	Description	Pcs	Part No	Note
12	Electric panel(Complete) Elpanel(Komplett); Elektrische Paneel(Komplett); Panneau electrique(Complet)	1	166083	
13	Screw Skruv; Schraube; Vis	1	28818	
14	Insulation plate Isolerplatta; Isolierplatte; Plaque isolation	1	74615	
15	Screw Skruv; Schraube; Vis	4	27499	
16	Copper bar Kopparskena; Kupferstab; Plaque de cuivre	1	149184	
17	Copper bar Kopparskena; Kupferstab; Plaque de cuivre	1	149181	
18	Copper bar Kopparskena; Kupferstab; Plaque de cuivre	1	161822	

© TOYOTA Industrial Equipment Europe SARL Ancenis, France

Pos	Description	Pcs	Part No	Note
19	Screw Skruv; Schraube; Vis	2	21750	
20	Nut Mutter; Mutter; Ecrou	2	28929	
21	Washer Bricka; Scheibe; Rondelle	2	22474	
22	Plate Plåt; Platte; Plaque	1	162105	
23	Screw Skruv; Schraube; Vis	4	29834	
24	Washer Bricka; Scheibe; Rondelle	4	20236	
25	Bracket Fäste; Halterung; Support	4	129399	
26	Damper Dämpare; Dämpfer; Attenteur	3	21997	
27	Fuse(160 A) Säkring; Sicherung; Fusible	1	29223	
28	Fuse(100A) Säkring; Sicherung; Fusible	1	29228	
29	Insulator Isolator; Isolator; Isolateur	4	65183	
30	Nut Mutter; Mutter; Ecrou	4	20045	
31	Washer Bricka; Scheibe; Rondelle	4	21393	
32	Washer Bricka; Scheibe; Rondelle	8	65184	
33	Screw Skruv; Schraube; Vis	10	27500	
34	Copper bar Kopparskena; Kupferstab; Plaque de cuivre	1	149185	
35	Copper bar Kopparskena; Kupferstab; Plaque de cuivre	1	149183	
36	Screw Skruv; Schraube; Vis	4	20050	
37	Nut Mutter; Mutter; Ecrou	4	20081	
38	Transistor controller Transistorregulator; Transistorregulator; Regulateur des transistors	1	166328-001	
39	Screw Skruv; Schraube; Vis	1	28818	
40	Nut Mutter; Mutter; Ecrou	1	21094	
41	Washer Bricka; Scheibe; Rondelle	1	20236	
42	Junction card Kopplingskort; Verbindungskarte; Carte de connexion électrique	1	149308-001	
43	Fuse(7,5A) Säkring; Sicherung; Fusible	1	122308-075	
44	Bracket Fäste; Halterung; Support	1	135422	
45	Fuse holder Säkringshållare; Sicherungshalter; Porte-fusibles	1	135421	
46	Bracket Fäste; Halterung; Support	2	129399	
47	Screw Skruv; Schraube; Vis	2	29834	
48	Washer Bricka; Scheibe; Rondelle	2	20236	
49	Nut Mutter; Mutter; Ecrou	3	20433	

© TOYOTA Industrial Equipment Europe SARL Ancenis, France

5850-001

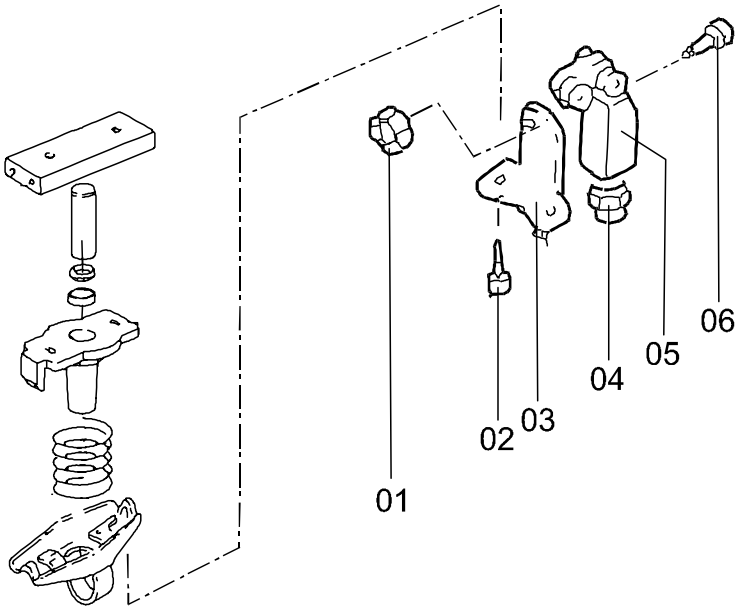

© TOYOTA Industrial Equipment Europe SARL Ancenis, France

5850-001 Positioning probes/ sensors

[1998-02-07]

Positioneringsgivare/-sensor; Positionsgeber/-sensor; Capteurs de positionnement

Powertrac			595 SLL 16	285755 -
Pos	Description	Pcs	Part No	Note
01	Nut Mutter; Mutter; Ecrou	2	25699	
02	Screw Skruv; Schraube; Vis	2	20333	
03	Bracket Fäste; Halterung; Support	1	132849	
04	Fitting Förskruvning; Verschraubung; Presse-étoupe	1	27659	
05	Switch Brytare; Schalter; Rupteur	1	132185	
06	Screw Skruv; Schraube; Vis	2	28421	

© TOYOTA Industrial Equipment Europe SARL Ancenis, France

6100-035

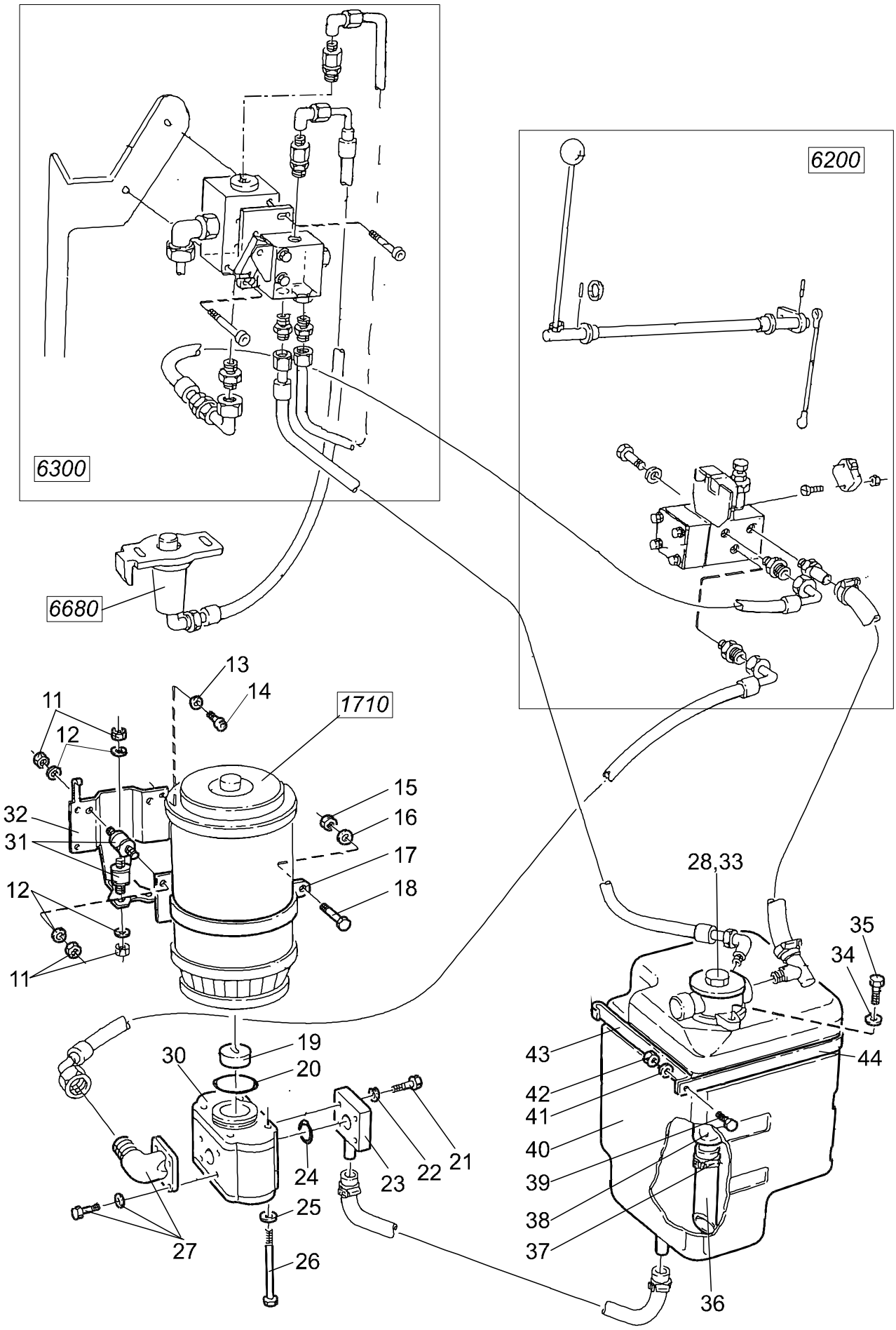

© TOYOTA Industrial Equipment Europe SARL Ancenis, France

6100-035 Hydraulic unit

[1998-03-17]

Hydraulaggregat; Hydraulikaggregat; Unité hydraulique

			595 SLL 16	268826 -
Pos	Description	Pcs	Part No	Note
11	Nut Mutter; Mutter; Ecrou	12	20249	
12	Washer Bricka; Scheibe; Rondelle	12	21351	
13	Washer Bricka; Scheibe; Rondelle	4	21275	
14	Screw Skruv; Schraube; Vis	4	20050	
15	Nut Mutter; Mutter; Ecrou	1	20016	
16	Washer Bricka; Scheibe; Rondelle	1	21275	
17	Bracket Fäste; Halterung; Support	1	101177	
18	Screw Skruv; Schraube; Vis	1	21159	
19	Connector unit Kopplingsstycke; Kupplungsstück; Raccordement	1	22036	
20	O-ring O-ring; O-ring; Joint torique	1	22037	
21	Screw Skruv; Schraube; Vis	4	20750	
22	Washer Bricka; Scheibe; Rondelle	4	21351	
23	Connection Koppling; Kupplung; Raccord	1	126686	
24	O-ring O-ring; O-ring; Joint torique	1	21761	
25	Washer Bricka; Scheibe; Rondelle	4	21393	
26	Screw Skruv; Schraube; Vis	4	20933	
27	Connection(Complete) Koppling(Komplett); Kupplung(Komplett); Raccord(Complet)	1	28704	
28	Filter Filter; Filter; Filtre	1	150136	
30	Pump Pump; Pump; Pumpe	1	22552	
31	Damper Dämpare; Dämpfer; Attenteur	8	21997	
32	Bracket Fäste; Halterung; Support	1	119105	
33	Packing Packning; Packung; Étanchage	1	27652	
34	Washer Bricka; Scheibe; Rondelle	2	20404	
35	Screw Skruv; Schraube; Vis	2	21141	
36	Hose Slang; Schlauch; Tuyau flexible	1	148633-001	
37	Clamp Klamma; Rohrschelle; Collier	2	28691	
38	Filter Filter; Filter; Filtre	1	139690	
39	Screw Skruv; Schraube; Vis	1	20154	
40	Tank Tank; Behälter; Reservoir	1	127257	
41	Washer Bricka; Scheibe; Rondelle	1	21351	
42	Nut Mutter; Mutter; Ecrou	1	20249	

© TOYOTA Industrial Equipment Europe SARL Ancenis, France

TOYOTA

Pos	Description	Pcs	Part No	Note
43	Bracket Fäste; Halterung; Support	1	130591	
44	Bracket Fäste; Halterung; Support	1	119202	

© TOYOTA Industrial Equipment Europe SARL Ancenis, France

© TOYOTA Industrial Equipment Europe SARL Ancenis, France

6200-001

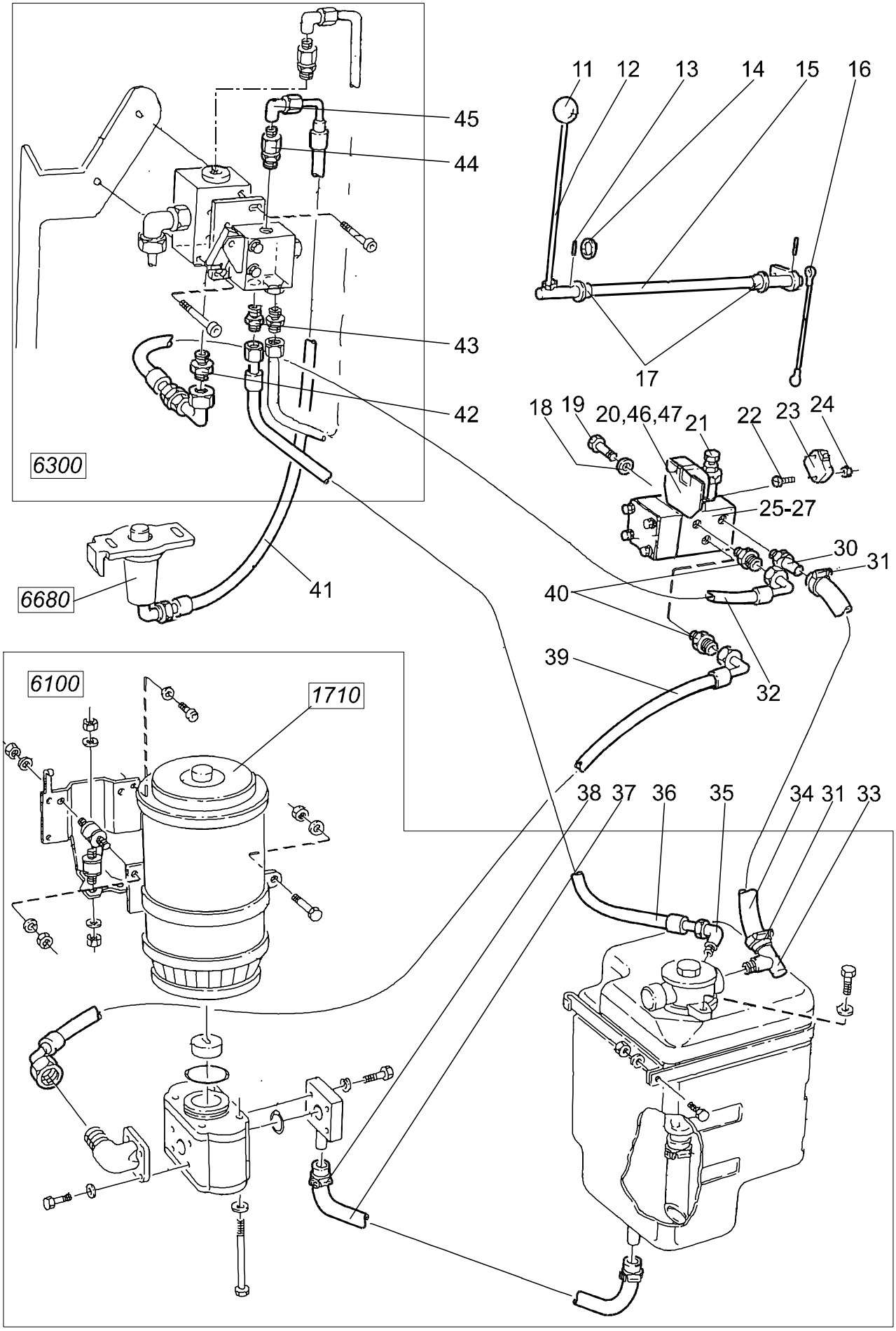

© TOYOTA Industrial Equipment Europe SARL Ancenis, France

6200-001 Hydraulic system chassi mounted [1998-03-17]

Hydraulsystem chassimonterat; Hydraulikanlage Chassis; Système hydraulique châssis

			595 SLL 16	268826 -
Pos	Description	Pcs	Part No	Note
11	Knob Knopp; Knopf; Bouton	1	20080	
12	Lever Spak; Hebel; Levier	1	141746	
13	Locking pin Spännstift; Spannstift; Goupille	2	20001	
14	Washer Bricka; Scheibe; Rondelle	2	20882	
15	Axle Axel; Achse; Axe	1	119439	
16	Link Länk; Gelenk; Bras	1	27901	
17	Bush Bussning; Bague; Bague	2	140174	
18	Washer Bricka; Scheibe; Rondelle	2	21275	
19	Screw Skruv; Schraube; Vis	2	20031	
20	Bracket Fäste; Halterung; Support	1	132985	
21	Pressure reducing valve Tryckbegränsningsventil; Druckreduzierventil; Soupape de réglage de pression	1	132987	
22	Screw Skruv; Schraube; Vis	2	22548	
23	Micro switch Mikrobrytare; Mikroschalter; Interrupteurs	1	156278	
24	Nut Mutter; Mutter; Ecrou	2	22549	
25	Valve Ventil; Ventil; Soupape	1	130556	
26	Pressure spring Tryckfjäder; Druckfeder; Ressort de pression	1	132988	
27	Packing set Packningssats; Packungssatz; Jeux d´ étanchéite.	1	132979	
30	Connection Koppling; Kupplung; Raccord	1	119545	
31	Clamp Klamma; Rohrschelle; Collier	2	28691	
32	Hose Slang; Schlauch; Tuyau flexible	1	147403	
33	Connection Koppling; Kupplung; Raccord	1	26572	
34	Hose Slang; Schlauch; Tuyau flexible	1	120674	
35	Connection Koppling; Kupplung; Raccord	1	28941	
36	Hose Slang; Schlauch; Tuyau flexible	1	142809	
37	Hose Slang; Schlauch; Tuyau flexible	1	127303	
38	Clamp Klamma; Rohrschelle; Collier	2	28691	
39	Hose Slang; Schlauch; Tuyau flexible	1	135321	
40	Connection Koppling; Kupplung; Raccord	2	20864	
41	Hose Slang; Schlauch; Tuyau flexible	1	142810	
42	Connection Koppling; Kupplung; Raccord	1	28947	
43	Connection Koppling; Kupplung; Raccord	1	27491	

© TOYOTA Industrial Equipment Europe SARL Ancenis, France

Pos	Description	Pcs	Part No	Note
44	Connection Koppling; Kupplung; Raccord	1	27491	
45	Connection Koppling; Kupplung; Raccord	1	29663	
46	Cam disc roller Kamrulle; Umleitungsrolle; Roleau de segment	1	132986	

© TOYOTA Industrial Equipment Europe SARL Ancenis, France

© TOYOTA Industrial Equipment Europe SARL Ancenis, France

6200-003

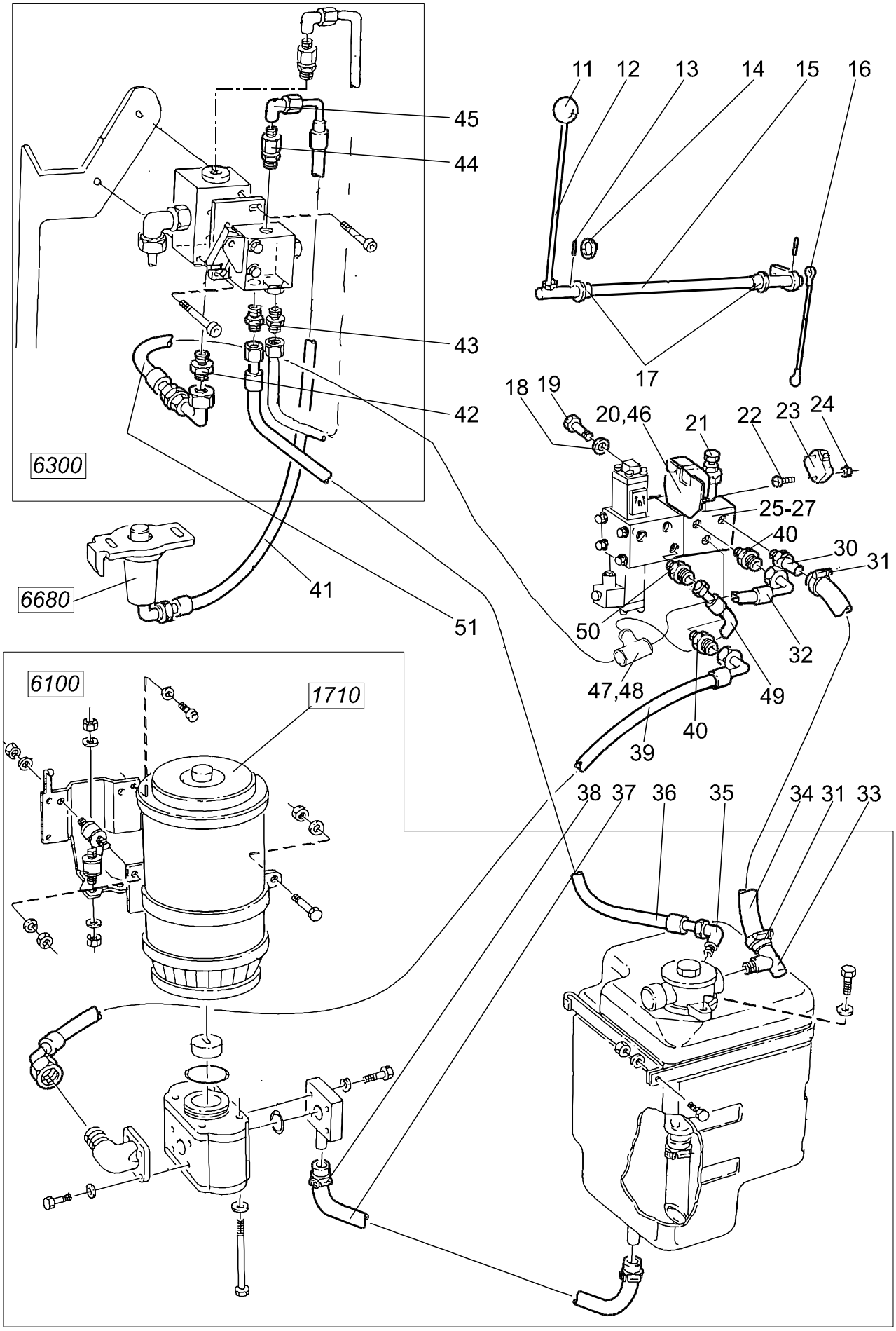

© TOYOTA Industrial Equipment Europe SARL Ancenis, France

6200-003 Hydraulic system chassi mounted

[1998-07-30]

Hydraulsystem chassimonterat; Hydraulikanlage Chassis; Système hydraulique châssis

Electric lifting / sinking; Elektrisk lyft / sänkning; Elektrische hebe / senkung; Levage / dépression de electrique			595 SLL 16	268826 -
Pos	Description	Pcs	Part No	Note
11	Knob Knopp; Knopf; Bouton	1	20080	
12	Lever Spak; Hebel; Levier	1	141746	
13	Locking pin Spännstift; Spannstift; Goupille	2	20001	
14	Washer Bricka; Scheibe; Rondelle	2	20882	
15	Axle Axel; Achse; Axe	1	119439	
16	Link Länk; Gelenk; Bras	1	27901	
17	Bush Bussning; Bague; Bague	2	140174	
18	Washer Bricka; Scheibe; Rondelle	2	21275	
19	Screw Skruv; Schraube; Vis	2	20031	
20	Bracket Fäste; Halterung; Support	1	132985	
21	Pressure reducing valve Tryckbegränsningsventil; Druckreduzierventil; Soupape de réglage de pression	1	132987	
22	Screw Skruv; Schraube; Vis	2	22548	
23	Micro switch Mikrobrytare; Mikroschalter; Interrupteurs	1	156278	
24	Nut Mutter; Mutter; Ecrou	2	22549	
25	Valve Ventil; Ventil; Soupape	1	145830	
26	Pressure spring Tryckfjäder; Druckfeder; Ressort de pression	1	132988	
27	Packing set Packningssats; Packungssatz; Jeux d´ étanchéite.	1	132979	
30	Connection Koppling; Kupplung; Raccord	1	119545	
31	Clamp Klamma; Rohrschelle; Collier	2	28691	
32	Hose Slang; Schlauch; Tuyau flexible	1	153925	
33	Connection Koppling; Kupplung; Raccord	1	26572	
34	Hose Slang; Schlauch; Tuyau flexible	1	120674	
35	Connection Koppling; Kupplung; Raccord	1	28941	
36	Hose Slang; Schlauch; Tuyau flexible	1	142809	
37	Hose Slang; Schlauch; Tuyau flexible	1	127303	
38	Clamp Klamma; Rohrschelle; Collier	2	28691	
39	Hose Slang; Schlauch; Tuyau flexible	1	135321	
40	Connection Koppling; Kupplung; Raccord	2	20864	
41	Hose Slang; Schlauch; Tuyau flexible	1	142810	
42	Connection Koppling; Kupplung; Raccord	1	28947	

© TOYOTA Industrial Equipment Europe SARL Ancenis, France

Pos	Description	Pcs	Part No	Note
43	Connection Koppling; Kupplung; Raccord	1	27491	
44	Connection Koppling; Kupplung; Raccord	1	27491	
45	Connection Koppling; Kupplung; Raccord	1	29663	
46	Cam disc roller Kamrulle; Umleitungsrolle; Roleau de segment	1	132986	
47	Connection(T) Koppling; Kupplung; Raccord	1	28778	
48	Connection Koppling; Kupplung; Raccord	1	28800	
49	Hose Slang; Schlauch; Tuyau flexible	1	149343-002	
50	Connection Koppling; Kupplung; Raccord	1	28943	
51	Hose Slang; Schlauch; Tuyau flexible	1	147403	

© TOYOTA Industrial Equipment Europe SARL Ancenis, France

© TOYOTA Industrial Equipment Europe SARL Ancenis, France

6300-001

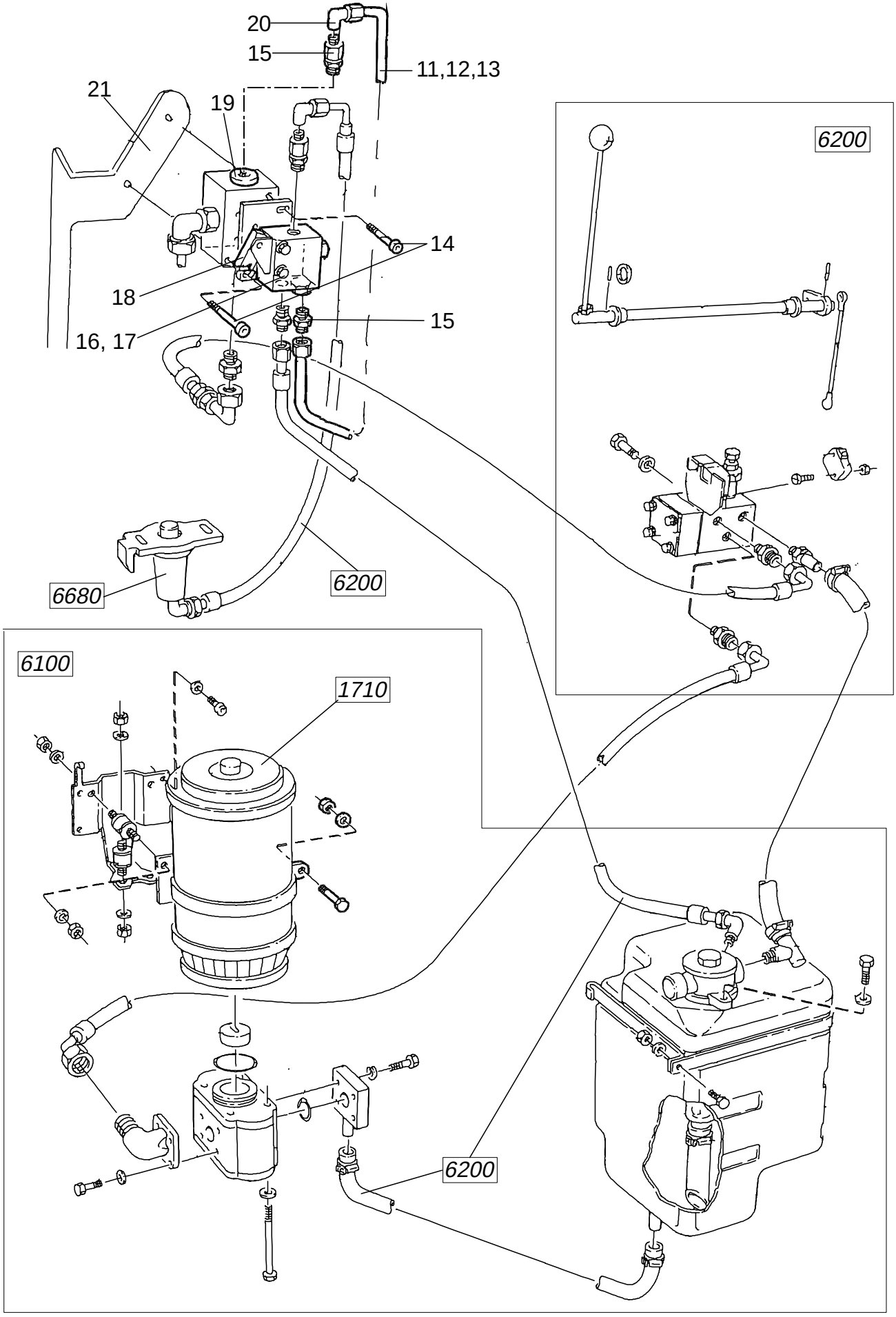

© TOYOTA Industrial Equipment Europe SARL Ancenis, France

6300-001 Hydraulic system mast mounted [1998-03-17]

Hydraulsystem stativmonterat; Hydraulikanlage Hubeinrichtung; Système hydraulique mât

			595 SLL 16	268826 -
Pos	Description	Pcs	Part No	Note
11	Pipe Rör; Rohr; Tube	1	147301	
12	Nut Mutter; Mutter; Ecrou	2	29475	
13	Ferrule Skärring; Schneidring; Cone de raccord	2	29476	
14	Screw Skruv; Schraube; Vis	2	22073	
15	Connection Koppling; Kupplung; Raccord	1	27491	
16	Screw Skruv; Schraube; Vis	2	22006	
17	Washer Bricka; Scheibe; Rondelle	2	20236	
18	Operating device Manöverdon; Steuerungsvorrichtung; Bras de commande	1	133755	
19	Reducer Reducering; Reduzierung; Réduction	1	26273	
20	Connection Koppling; Kupplung; Raccord	1	29663	
21	Bracket Fäste; Halterung; Support	1	148822	

© TOYOTA Industrial Equipment Europe SARL Ancenis, France

6320-005

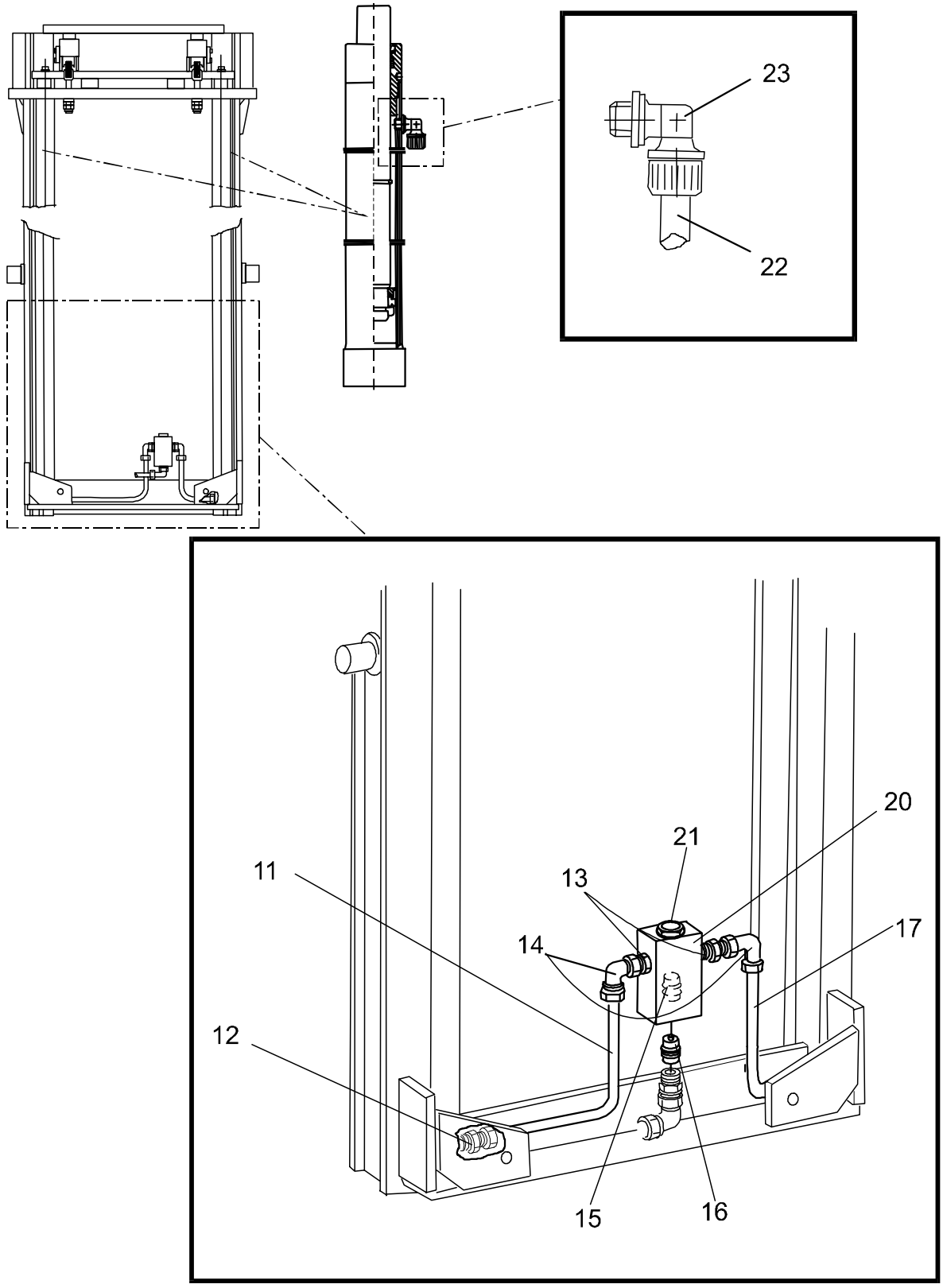

© TOYOTA Industrial Equipment Europe SARL Ancenis, France

6320-005 Mast hydraulic lines

[1998-05-25]

Stativhydraulledningar; Hydraulikleitungen Hubeinrichtung; Circuits hydrauliques mât

Duplex Tele			595 SLL 16	268826 -
Pos	Description	Pcs	Part No	Note
11	Pipe Rör; Rohr; Tube	1	105430	
12	Connection Koppling; Kupplung; Raccord	2	29532	
13	Connection Koppling; Kupplung; Raccord	2	28781	
14	Connection Koppling; Kupplung; Raccord	2	28801	
15	Restriction valve Sänkbromsventil; Drosselventil; Soupape de reduction	1	29670	
16	Connection Koppling; Kupplung; Raccord	1	28947	
17	Pipe Rör; Rohr; Tube	1	105431	
20	Connector unit Kopplingsstycke; Kupplungsstück; Raccordement	1	101292	
21	Reducer Reducering; Reduzierung; Réduction	1	26273	
22	Hose(Meter) Slang(Meter); Schlauch(Meter); Tuyau flexible(Metre)		28108	
23	Connection Koppling; Kupplung; Raccord	2	21994	

© TOYOTA Industrial Equipment Europe SARL Ancenis, France

6320-006

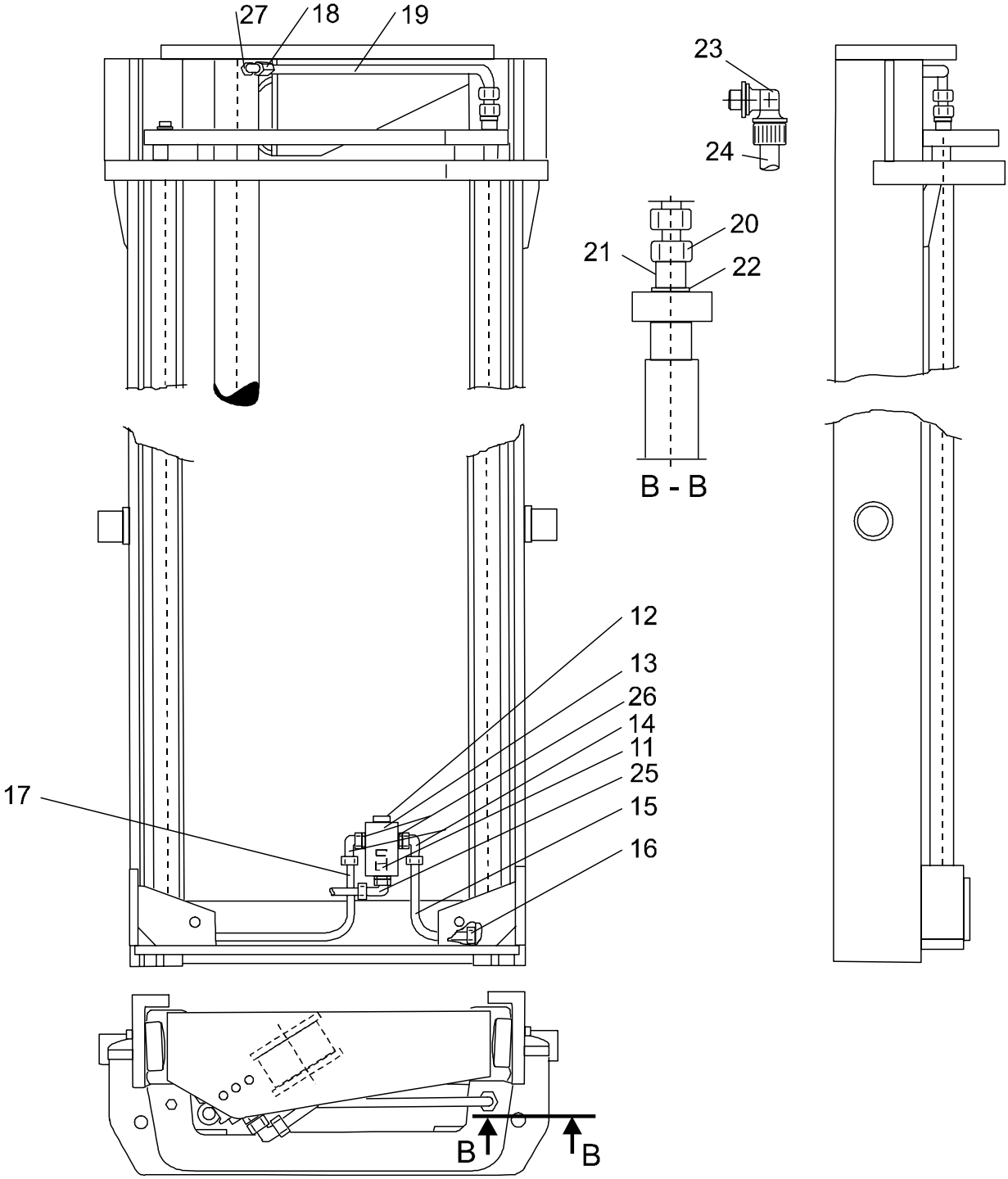

© TOYOTA Industrial Equipment Europe SARL Ancenis, France

6320-006 Mast hydraulic lines

[1998-05-25]

Stativhydraulledningar; Hydraulikleitungen Hubeinrichtung; Circuits hydrauliques mât

Duplex HiLo			595 SLL 16	268826 -
Pos	Description	Pcs	Part No	Note
11	Restriction valve Sänkbromsventil; Drosselventil; Soupape de reduction	1	29670	
12	Reducer Reducering; Reduzierung; Réduction	1	26273	
13	Connector unit Kopplingsstycke; Kupplungsstück; Raccordement	1	101292	
14	Connection Koppling; Kupplung; Raccord	2	28801	
15	Pipe Rör; Rohr; Tube	1	143729	
16	Connection Koppling; Kupplung; Raccord	2	29532	
17	Pipe Rör; Rohr; Tube	1	143728	
18	Connection Koppling; Kupplung; Raccord	1	28801	
19	Pipe Rör; Rohr; Tube	1	139997	
20	Connection Koppling; Kupplung; Raccord	1	28781	
21	Connection Koppling; Kupplung; Raccord	1	140593	
22	Washer Bricka; Scheibe; Rondelle	1	126723-010	
23	Connection Koppling; Kupplung; Raccord	2	21994	
24	Hose(Meter) Slang(Meter); Schlauch(Meter); Tuyau flexible(Metre)		28108	
25	Connection Koppling; Kupplung; Raccord	1	28947	
26	Connection Koppling; Kupplung; Raccord	2	28781	
27	Connection Koppling; Kupplung; Raccord	1	28781	

© TOYOTA Industrial Equipment Europe SARL Ancenis, France

6320-056

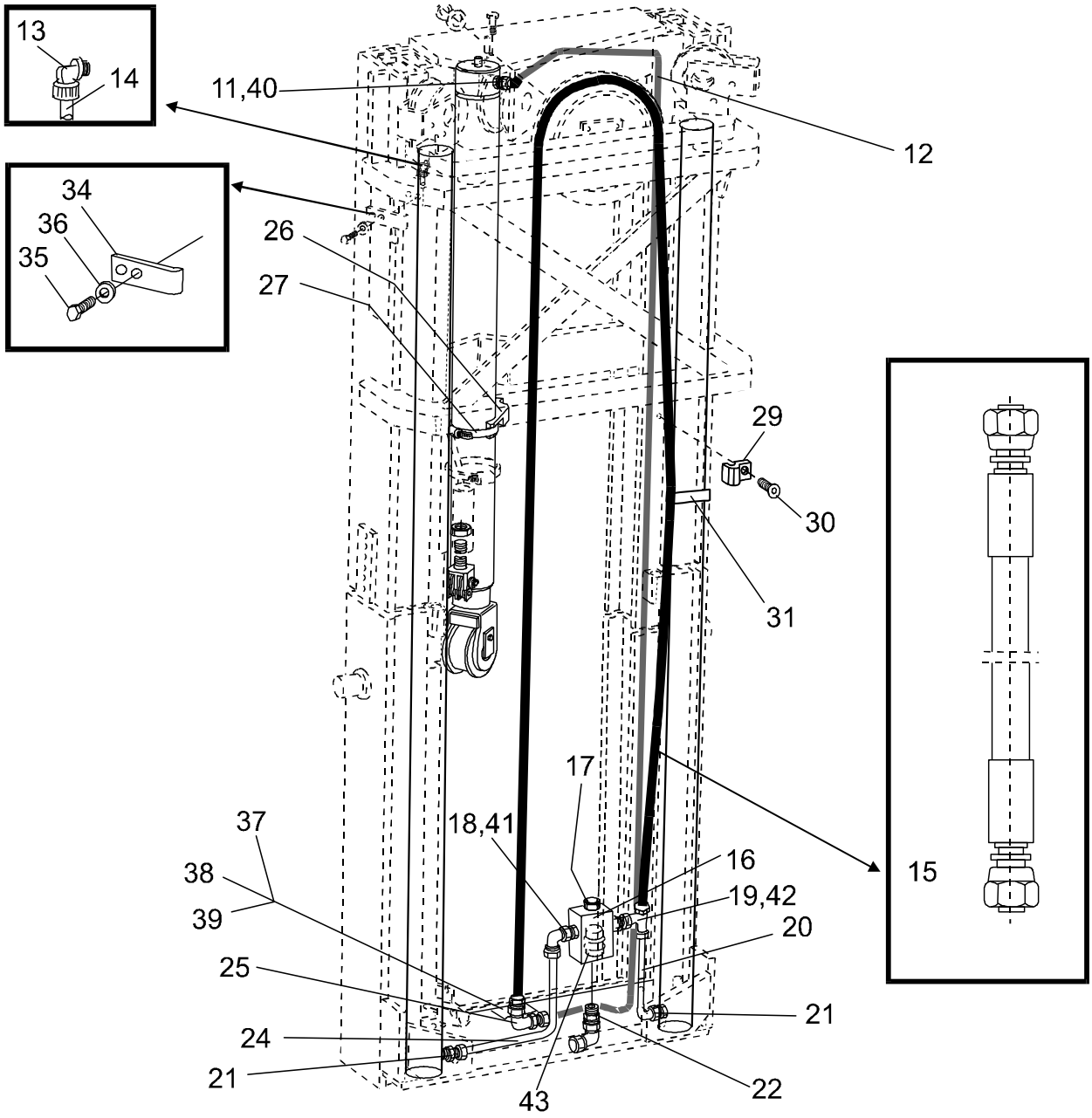

© TOYOTA Industrial Equipment Europe SARL Ancenis, France

6320-056 Mast hydraulic lines

[2000-01-27]

Stativhydraulledningar; Hydraulikleitungen Hubeinrichtung; Circuits hydrauliques mât

Triplex Hi-Lo			595 SLL 16 354260 -	
Pos	Description	Pcs	Part No	Note
11	Connection Koppling; Kupplung; Raccord	1	28801	
12	Pipe Rör; Rohr; Tube	1	151076-335	Lift height = 3350 mm Lyfthöjd = 3350 mm; Hubhöhe = 3350 mm; Hauteur d'élévation = 3350 mm
12	Pipe Rör; Rohr; Tube	1	151076-375	Lift height = 3750 mm Lyfthöjd = 3750 mm; Hubhöhe = 3750 mm; Hauteur d'élévation = 3750 mm
12	Pipe Rör; Rohr; Tube	1	151076-415	Liftheigt = 4150 mm Lyfthöjd = 4150 mm; Hubhöhe = 4150 mm; Hauteur d'élévation = 4150 mm
12	Pipe Rör; Rohr; Tube	1	151076-440	Lift height = 4400 mm Lyfthöjd = 4400 mm; Hubhöhe = 4400 mm; Hauteur d'élévation = 4400 mm
12	Pipe Rör; Rohr; Tube	1	151076-480	Liftheight = 4800 mm Lyfthöjd = 4800 mm; Hubhöhe = 4800 mm; Hauteur de levee = 4800 mm
12	Pipe Rör; Rohr; Tube	1	151076-540	Lift height = 5400 mm Lyfthöjd = 5400 mm; Hubhöhe = 5400 mm; Hauteur de levee = 5400 mm
13	Connection Koppling; Kupplung; Raccord	2	21994	
14	Hose(Meter) Slang(Meter); Schlauch(Meter); Tuyau flexible(Metre)		28108	
15	Hose Slang; Schlauch; Tuyau flexible	1	151074-335	
15	Hose Slang; Schlauch; Tuyau flexible	1	151074-375	
15	Hose Slang; Schlauch; Tuyau flexible	1	151074-415	
15	Hose Slang; Schlauch; Tuyau flexible	1	151074-440	
15	Hose Slang; Schlauch; Tuyau flexible	1	151074-480	
15	Hose Slang; Schlauch; Tuyau flexible	1	151074-540	
16	Reducer Reducering; Reduzierung; Réduction	1	26273	
17	Connection Koppling; Kupplung; Raccord	1	28781	
18	Connection Koppling; Kupplung; Raccord	1	28801	
19	Connection Koppling; Kupplung; Raccord	1	28801	
20	Pipe Rör; Rohr; Tube	1	105431	
21	Connection Koppling; Kupplung; Raccord	2	29532	
22	Connection Koppling; Kupplung; Raccord	1	28947	
24	Pipe Rör; Rohr; Tube	1	105430	
25	Connection Koppling; Kupplung; Raccord	1	28797	
26	Bracket Fäste; Halterung; Support	1	101425	
27	Clamp Klamma; Rohrschelle; Collier	1	20393	
29	Clamp Klamma; Rohrschelle; Collier	1	101417	
30	Screw Skruv; Schraube; Vis	1	20188	

© TOYOTA Industrial Equipment Europe SARL Ancenis, France

Pos	Description	Pcs	Part No	Note
31	Clamp Klamma; Rohrschelle; Collier	2	146753	
34	Clamp Klamma; Rohrschelle; Collier	1	105402	
35	Screw Skruv; Schraube; Vis	2	20154	
36	Washer Bricka; Scheibe; Rondelle	2	20375	
37	Bracket Fäste; Halterung; Support	1	139068	
38	Screw Skruv; Schraube; Vis	2	20154	
39	Washer Bricka; Scheibe; Rondelle	2	21351	
40	Connection Koppling; Kupplung; Raccord	1	28781	
41	Connection Koppling; Kupplung; Raccord	1	28781	
42	Connection Koppling; Kupplung; Raccord	1	28781	
43	Restriction valve Sänkbromsventil; Drosselventil; Soupape de reduction	1	29670	

© TOYOTA Industrial Equipment Europe SARL Ancenis, France

© TOYOTA Industrial Equipment Europe SARL Ancenis, France

6610-006

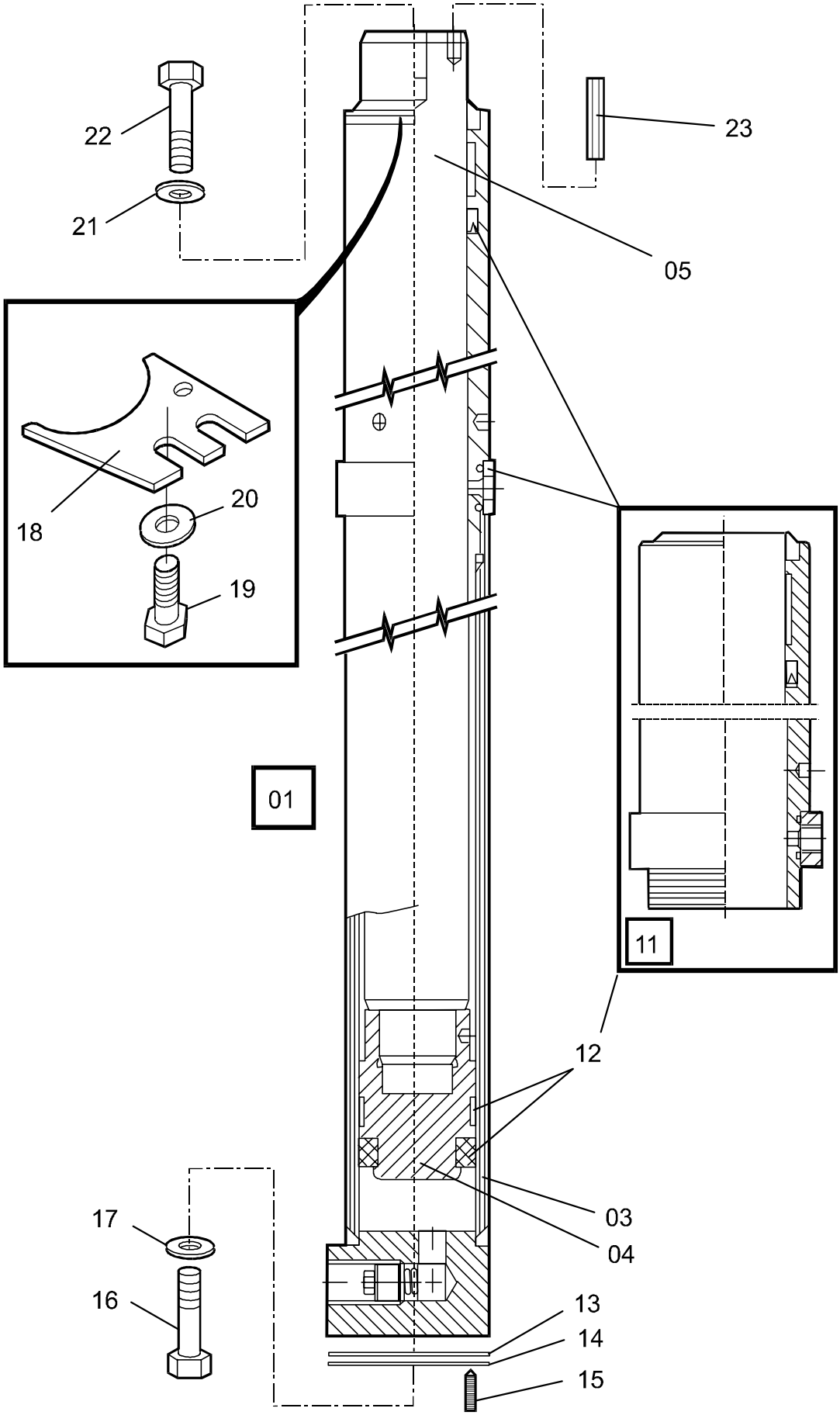

© TOYOTA Industrial Equipment Europe SARL Ancenis, France

6610-006 Main lift cylinders

[1998-05-16]

Huvudlyftcylindrar; Haupthubzylinder; Vérin de levage, principal

Duplex Tele			595 SLL 16	310750 -
Pos	Description	Pcs	Part No	Note
01	Lifting cylinder compl Lyftcylinder kompl.; Hubzylinder Kompl.; Verin de levage compl.	2	157998-235	Lift height = 2350 mm Lyfthöjd = 2350 mm; Hubhöhe = 2350 mm; Hauter d'élévation = 2350 mm
01	Lifting cylinder compl Lyftcylinder kompl.; Hubzylinder Kompl.; Verin de levage compl.	2	157998-285	Lift height = 2850 mm Lyfthöjd = 2850 mm; Hubhöhe = 2850 mm; Hauteur d'élévation = 2850 mm
01	Lifting cylinder compl Lyftcylinder kompl.; Hubzylinder Kompl.; Verin de levage compl.	2	157998-290	Lift height = 2900 mm Lyfthöjd = 2900 mm; Hubhöhe = 2900 mm; Hauteur d'élévation = 2900 mm
01	Lifting cylinder compl Lyftcylinder kompl.; Hubzylinder Kompl.; Verin de levage compl.	2	157998-335	Lift height = 3350 mm Lyfthöjd = 3350 mm; Hubhöhe = 3350 mm; Hauteur d'élévation = 3350 mm
01	Lifting cylinder compl Lyftcylinder kompl.; Hubzylinder Kompl.; Verin de levage compl.	2	157998-375	Lift height = 3750 mm Lyfthöjd = 3750 mm; Hubhöhe = 3750 mm; Hauteur d'élévation = 3750 mm
01	Lifting cylinder compl Lyftcylinder kompl.; Hubzylinder Kompl.; Verin de levage compl.	2	157998-415	Liftheigt = 4150 mm Lyfthöjd = 4150 mm; Hubhöhe = 4150 mm; Hauteur d'élévation = 4150 mm
03	Cylinder pipe Cylinderrör; Zylinderrohr; Tube de cylindre	2	139975-235	
03	Cylinder pipe Cylinderrör; Zylinderrohr; Tube de cylindre	2	139975-285	
03	Cylinder pipe Cylinderrör; Zylinderrohr; Tube de cylindre	2	139975-290	
03	Cylinder pipe Cylinderrör; Zylinderrohr; Tube de cylindre	2	139975-335	
03	Cylinder pipe Cylinderrör; Zylinderrohr; Tube de cylindre	2	139975-375	
03	Cylinder pipe Cylinderrör; Zylinderrohr; Tube de cylindre	2	139975-415	
04	Piston Kolv; Kolben; Piston	2	120494	
05	Piston rod Kolvstång; Kolbenstange; Tige de piston	2	139977-235	
05	Cylinder pipe Cylinderrör; Zylinderrohr; Tube de cylindre	2	139977-285	
05	Piston rod Kolvstång; Kolbenstange; Tige de piston	2	139977-290	
05	Piston rod Kolvstång; Kolbenstange; Tige de piston	2	139977-335	
05	Piston rod Kolvstång; Kolbenstange; Tige de piston	2	139977-375	
05	Piston rod Kolvstång; Kolbenstange; Tige de piston	2	139977-415	
11	Recondition set Renoveringssats; Renovierungssatz; Jeux a´renovation	2	160341	
12	Sealing kit(Piston) Tätningssats(Kolv); Dichtungsatz(Kolben); Jeux d´étanchéite(Piston)	2	160018	
13	Shim(1 mm) Shims; Schim; Cale		105454	
14	Shim(0,5 mm) Shims; Schim; Cale		120531	
15	Stop screw Stoppskruv; Einstellschraube; Vis de arretoire	2	21346	
16	Screw Skruv; Schraube; Vis	4	28308	
17	Washer Bricka; Scheibe; Rondelle	4	21393	
18	Bracket Fäste; Halterung; Support	2	120492	
19	Screw Skruv; Schraube; Vis	4	21935	

© TOYOTA Industrial Equipment Europe SARL Ancenis, France

TOYOTA

Pos	Description	Pcs	Part No	Note
20	Washer Bricka; Scheibe; Rondelle	4	20404	
21	Washer Bricka; Scheibe; Rondelle	2	126723-004	
22	Screw Skruv; Schraube; Vis	2	28709	
23	Locking pin Spännstift; Spannstift; Goupille	2	21316	

© TOYOTA Industrial Equipment Europe SARL Ancenis, France

© TOYOTA Industrial Equipment Europe SARL Ancenis, France

6610-007

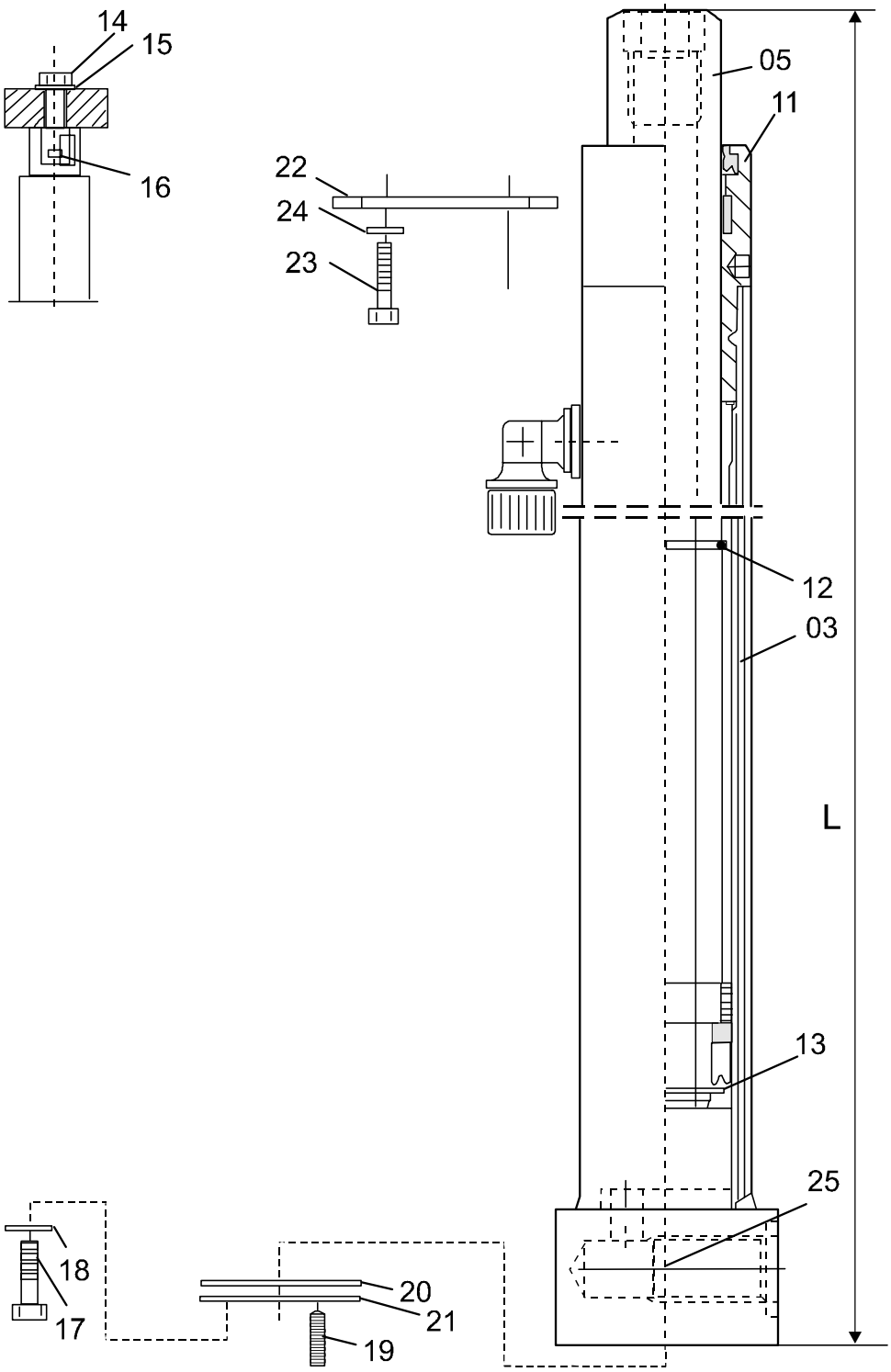

6610-007 Main lift cylinders

[1998-08-11]

Huvudlyftcylindrar; Haupthubzylinder; Vérin de levage, principal

Duplex HiLo			595 SLL 16	256600 -
Pos	Description	Pcs	Part No	Note
01	Lifting cylinder compl(L = 1455 mm) Lyftcylinder kompl.; Hubzylinder Kompl.; Verin de levage compl.	2	139998-235	Lift height = 2350 mm Lyfthöjd = 2350 mm; Hubhöhe = 2350 mm; Hauter d'élévation = 2350 mm
01	Lifting cylinder compl(L = 1730 mm) Lyftcylinder kompl.; Hubzylinder Kompl.; Verin de levage compl.	2	139998-290	Lift height = 2900 mm Lyfthöjd = 2900 mm; Hubhöhe = 2900 mm; Hauteur d'élévation = 2900 mm
01	Lifting cylinder compl(L = 1955 mm) Lyftcylinder kompl.; Hubzylinder Kompl.; Verin de levage compl.	2	139998-335	Lift height = 3350 mm Lyfthöjd = 3350 mm; Hubhöhe = 3350 mm; Hauteur d'élévation = 3350 mm

© TOYOTA Industrial Equipment Europe SARL Ancenis, France

Pos	Description	Pcs	Part No	Note
01	Lifting cylinder compl(L = 2155 mm) Lyftcylinder kompl.; Hubzylinder Kompl.; Verin de levage compl.	2	139998-375	Lift height = 3750 mm Lyfthöjd = 3750 mm; Hubhöhe = 3750 mm; Hauteur d'élévation = 3750 mm
01	Lifting cylinder compl(L = 2355) Lyftcylinder kompl.; Hubzylinder Kompl.; Verin de levage compl.	2	139998-415	Liftheigt = 4150 mm Lyfthöjd = 4150 mm; Hubhöhe = 4150 mm; Hauteur d'élévation = 4150 mm
02	Packing set Packningssats; Packungssatz; Jeux d´ étanchéite.	2	141054	
03	Cylinder pipe Cylinderrör; Zylinderrohr; Tube de cylindre	2	141050-235	
03	Cylinder pipe Cylinderrör; Zylinderrohr; Tube de cylindre	2	141050-290	
03	Cylinder pipe Cylinderrör; Zylinderrohr; Tube de cylindre	2	141050-335	
03	Cylinder pipe Cylinderrör; Zylinderrohr; Tube de cylindre	2	141050-375	
03	Cylinder pipe Cylinderrör; Zylinderrohr; Tube de cylindre	2	141050-415	
05	Piston rod Kolvstång; Kolbenstange; Tige de piston	2	141051-235	
05	Piston rod Kolvstång; Kolbenstange; Tige de piston	2	141051-290	
05	Piston rod Kolvstång; Kolbenstange; Tige de piston	2	141051-335	
05	Piston rod Kolvstång; Kolbenstange; Tige de piston	2	141051-375	
05	Piston rod Kolvstång; Kolbenstange; Tige de piston	2	141051-415	
11	Guide Styrning; Steuerung; Guidage	2	141052	
12	Locking ring Spårring; Schliessring; Circlip	2	141881	
13	Locking ring Spårring; Schliessring; Circlip	2	22704	
14	Screw Skruv; Schraube; Vis	1	24651	
15	Washer Bricka; Scheibe; Rondelle	1	126723-004	
16	Plug Plugg; Pfropf; Bouchon	1	140594	
17	Screw Skruv; Schraube; Vis	4	28308	
18	Washer Bricka; Scheibe; Rondelle	4	21393	
19	Stop screw Stoppskruv; Einstellschraube; Vis de arretoire	2	21346	
20	Shim(1 mm) Shims; Schim; Cale		105454	
21	Shim(0,5 mm) Shims; Schim; Cale		120531	
22	Bracket Fäste; Halterung; Support	2	120492	
23	Screw Skruv; Schraube; Vis	4	21935	
24	Washer Bricka; Scheibe; Rondelle	4	20404	
25	Restriction valve Sänkbromsventil; Drosselventil; Soupape de reduction	2	29626	

© TOYOTA Industrial Equipment Europe SARL Ancenis, France

6610-044

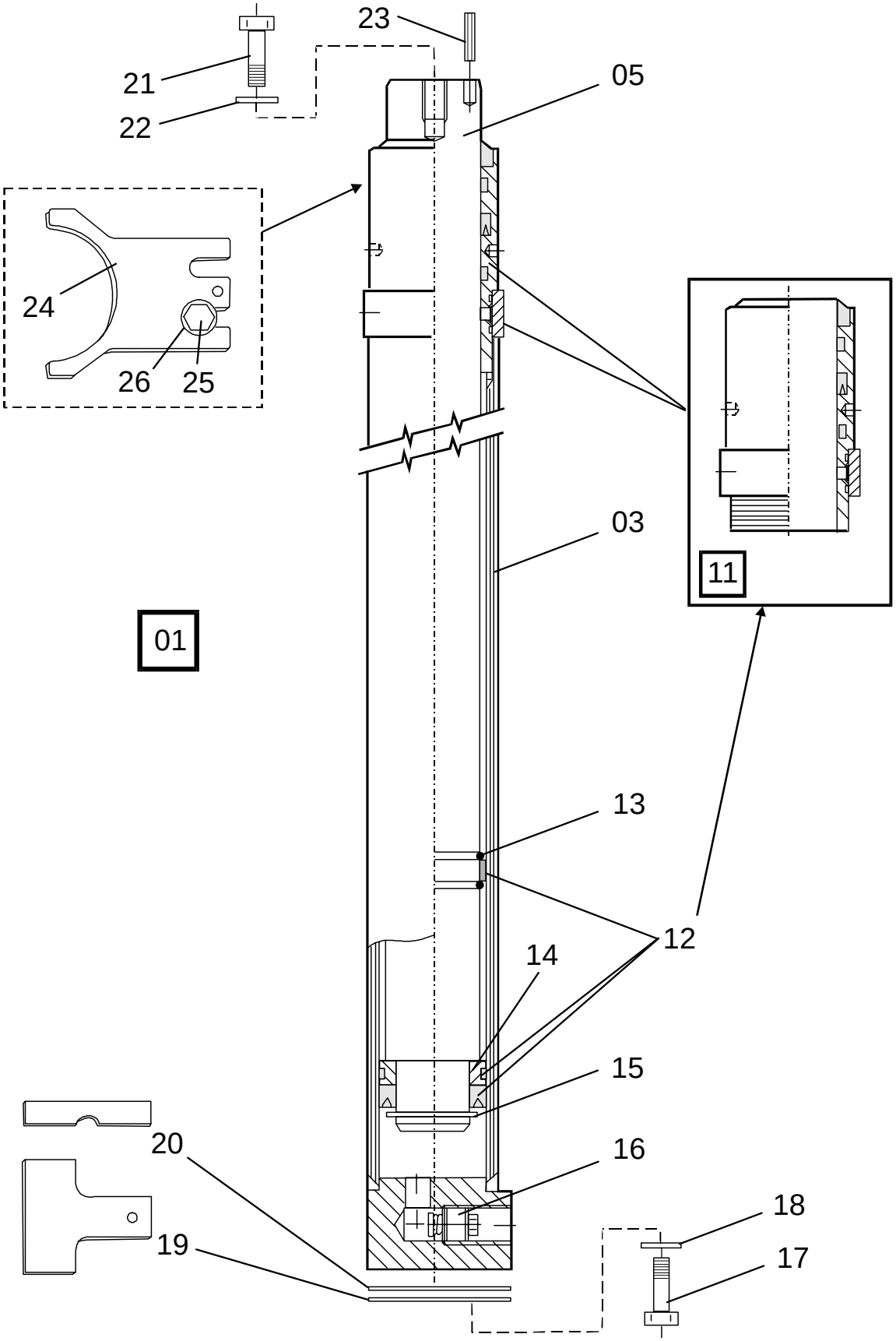

© TOYOTA Industrial Equipment Europe SARL Ancenis, France

6610-044 Main lift cylinders

[2000-01-26]

Huvudlyftcylindrar; Haupthubzylinder; Vérin de levage, principal

Triplex Hi-Lo			595 SLL 16	354260 -
Pos	Description	Pcs	Part No	Note
01	Lifting cylinder compl Lyftcylinder kompl.; Hubzylinder Kompl.; Verin de levage compl.	2	160019-335	Lift height = 3350 mm Lyfthöjd = 3350 mm; Hubhöhe = 3350 mm; Hauteur d'élévation = 3350 mm
01	Lifting cylinder compl Lyftcylinder kompl.; Hubzylinder Kompl.; Verin de levage compl.	2	160019-375	Lift height = 3750 mm Lyfthöjd = 3750 mm; Hubhöhe = 3750 mm; Hauteur d'élévation = 3750 mm
01	Lifting cylinder compl Lyftcylinder kompl.; Hubzylinder Kompl.; Verin de levage compl.	2	160019-415	Liftheigt = 4150 mm Lyfthöjd = 4150 mm; Hubhöhe = 4150 mm; Hauteur d'élévation = 4150 mm
01	Lifting cylinder compl Lyftcylinder kompl.; Hubzylinder Kompl.; Verin de levage compl.	2	160019-440	Lift height = 4400 mm Lyfthöjd = 4400 mm; Hubhöhe = 4400 mm; Hauteur d'élévation = 4400 mm
01	Lifting cylinder compl Lyftcylinder kompl.; Hubzylinder Kompl.; Verin de levage compl.	2	160019-480	Liftheight = 4800 mm Lyfthöjd = 4800 mm; Hubhöhe = 4800 mm; Hauteur de levee = 4800 mm
01	Lifting cylinder compl Lyftcylinder kompl.; Hubzylinder Kompl.; Verin de levage compl.	2	160019-540	Lift height = 5400 mm Lyfthöjd = 5400 mm; Hubhöhe = 5400 mm; Hauteur de levee = 5400 mm
03	Cylinder pipe Cylinderrör; Zylinderrohr; Tube de cylindre	2	155835-335	
03	Cylinder pipe Cylinderrör; Zylinderrohr; Tube de cylindre	2	155835-375	
03	Cylinder pipe Cylinderrör; Zylinderrohr; Tube de cylindre	2	155835-415	
03	Cylinder pipe Cylinderrör; Zylinderrohr; Tube de cylindre	2	155835-440	
03	Cylinder pipe Cylinderrör; Zylinderrohr; Tube de cylindre	2	155835-480	
03	Cylinder pipe Cylinderrör; Zylinderrohr; Tube de cylindre	2	155835-540	
05	Piston rod Kolvstång; Kolbenstange; Tige de piston	2	160023-335	
05	Piston rod Kolvstång; Kolbenstange; Tige de piston	2	160023-375	
05	Piston rod Kolvstång; Kolbenstange; Tige de piston	2	160023-415	
05	Piston rod Kolvstång; Kolbenstange; Tige de piston	2	160023-440	
05	Piston rod Kolvstång; Kolbenstange; Tige de piston	2	160023-480	
05	Piston rod Kolvstång; Kolbenstange; Tige de piston	2	160023-540	
11	Recondition set Renoveringssats; Renovierungssatz; Jeux a´renovation	2	160026	
12	Sealing kit(Piston) Tätningssats(Kolv); Dichtungsatz(Kolben); Jeux d´étanchéite(Piston)	2	160027	
13	Locking wire Låstråd; Schlossdraht; Cheville	2	155892	
14	Ring Ring; Ring; Bague	2	155841	
15	Locking ring Spårring; Schliessring; Circlip	2	20008	
16	Valve Ventil; Ventil; Soupape	2	29774	
17	Screw Skruv; Schraube; Vis	4	29778	
18	Washer Bricka; Scheibe; Rondelle	4	126723-004	
19	Shim(1 mm) Shims; Schim; Cale		105454	
19	Shim(0,5 mm) Shims; Schim; Cale		120531	

© TOYOTA Industrial Equipment Europe SARL Ancenis, France

Pos	Description	Pcs	Part No	Note
20	Shim Shims; Schim; Cale		150954	
21	Screw Skruv; Schraube; Vis	4	28709	
22	Washer Bricka; Scheibe; Rondelle	4	126723-004	
23	Locking pin Spännstift; Spannstift; Goupille	2	21316	
24	Bracket Fäste; Halterung; Support	2	151066	
25	Screw Skruv; Schraube; Vis	4	20460	
26	Washer Bricka; Scheibe; Rondelle	4	20404	

© TOYOTA Industrial Equipment Europe SARL Ancenis, France

© TOYOTA Industrial Equipment Europe SARL Ancenis, France

6620-003

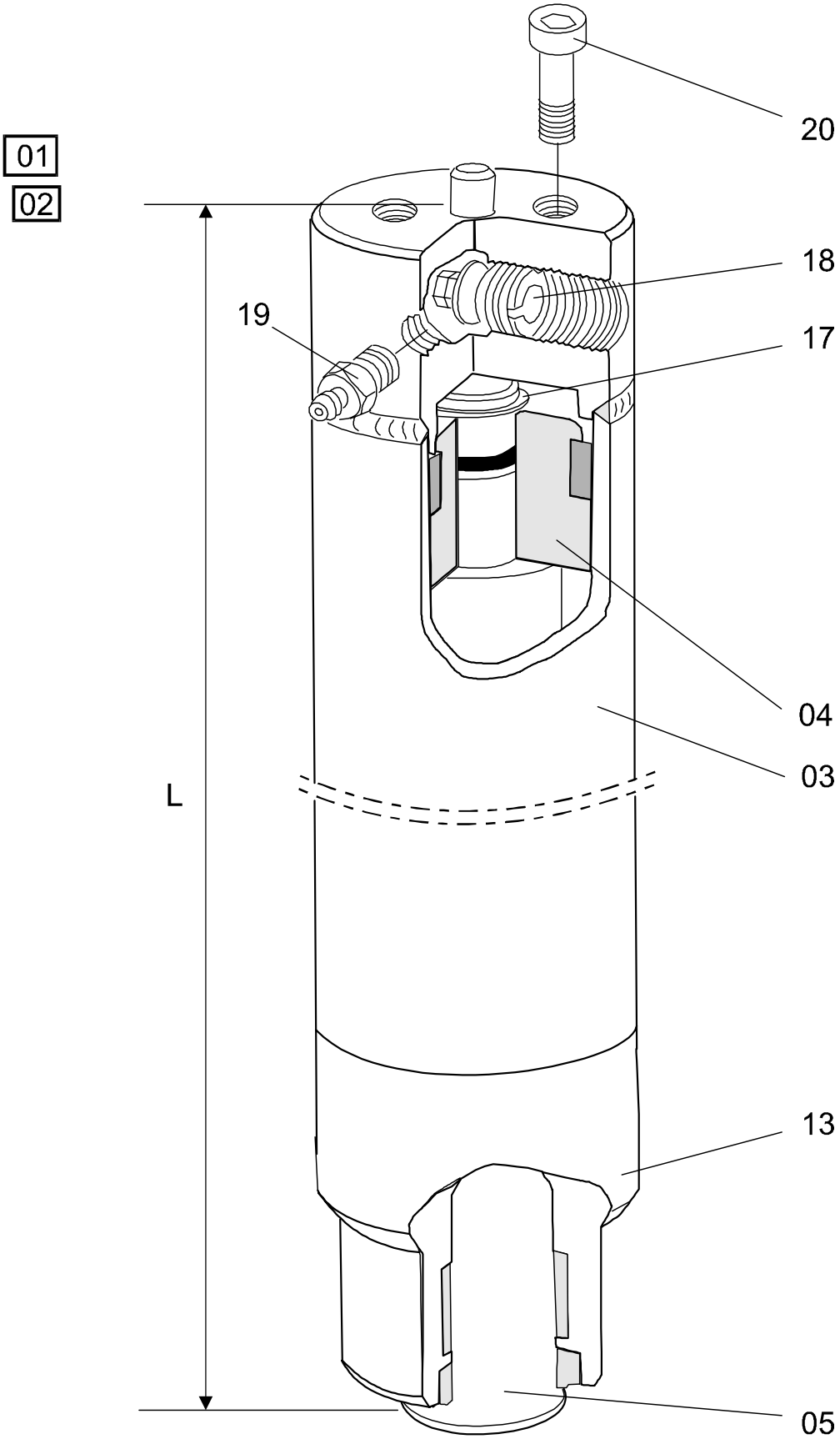

© TOYOTA Industrial Equipment Europe SARL Ancenis, France

6620-003 Free lift cylinder

[1998-05-18]

Frilyftscylinder; Freihubzylinder; Vérin de levée libre

Duplex HiLo			595 SLL 16	287167 -
Pos	Description	Pcs	Part No	Note
01	Cylinder compl.(L = 775 mm) Cylinder kompl.; Zylinder kompl.; Verin compl.	1	152729-235	Lift height = 2350 mm Lyfthöjd = 2350 mm; Hubhöhe = 2350 mm; Hauter d'élévation = 2350 mm
01	Cylinder compl.(L = 912 mm) Cylinder kompl.; Zylinder kompl.; Verin compl.	1	152729-290	Lift height = 2900 mm Lyfthöjd = 2900 mm; Hubhöhe = 2900 mm; Hauteur d'élévation = 2900 mm
01	Cylinder compl.(L = 1025 mm) Cylinder kompl.; Zylinder kompl.; Verin compl.	1	152729-335	Lift height = 3350 mm Lyfthöjd = 3350 mm; Hubhöhe = 3350 mm; Hauteur d'élévation = 3350 mm
01	Cylinder compl.(L = 1125 mm) Cylinder kompl.; Zylinder kompl.; Verin compl.	1	152729-375	Lift height = 3750 mm Lyfthöjd = 3750 mm; Hubhöhe = 3750 mm; Hauteur d'élévation = 3750 mm
01	Cylinder compl.(L = 1225 mm) Cylinder kompl.; Zylinder kompl.; Verin compl.	1	152729-415	Liftheigt = 4150 mm Lyfthöjd = 4150 mm; Hubhöhe = 4150 mm; Hauteur d'élévation = 4150 mm
02	Packing set Packningssats; Packungssatz; Jeux d´ étanchéite.	1	152988	
03	Cylinder pipe Cylinderrör; Zylinderrohr; Tube de cylindre	1	152990-235	
03	Cylinder pipe Cylinderrör; Zylinderrohr; Tube de cylindre	1	152990-290	
03	Cylinder pipe Cylinderrör; Zylinderrohr; Tube de cylindre	1	152990-335	
03	Cylinder pipe Cylinderrör; Zylinderrohr; Tube de cylindre	1	152990-375	
03	Cylinder pipe Cylinderrör; Zylinderrohr; Tube de cylindre	1	152990-415	
04	Piston Kolv; Kolben; Piston	1	152989	
05	Piston rod Kolvstång; Kolbenstange; Tige de piston	1	139988-235	
05	Piston rod Kolvstång; Kolbenstange; Tige de piston	1	139988-290	
05	Piston rod Kolvstång; Kolbenstange; Tige de piston	1	139988-335	
05	Piston rod Kolvstång; Kolbenstange; Tige de piston	1	139988-375	
05	Piston rod Kolvstång; Kolbenstange; Tige de piston	1	139988-415	
13	Cylinder top Cylindertopp; Zylinderkopf; Culasse	1	152991	
17	Locking ring Spårring; Schliessring; Circlip	1	20019	
18	Valve Ventil; Ventil; Soupape	1	27182	
19	Air bleeder Luftventil; Luftnippel; Soupape (air)	1	24325	
20	Screw Skruv; Schraube; Vis	2	20996	

© TOYOTA Industrial Equipment Europe SARL Ancenis, France

6620-027

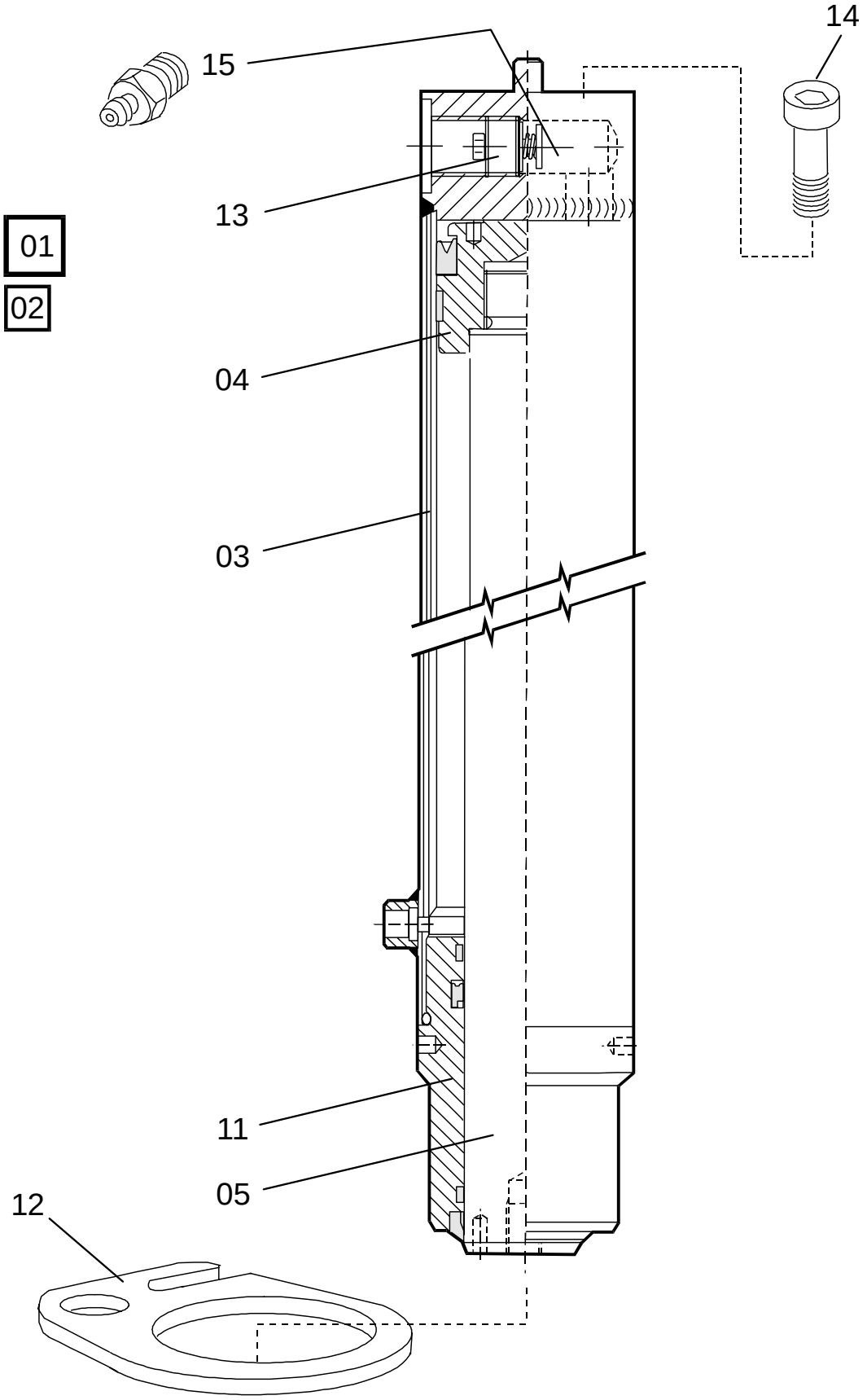

© TOYOTA Industrial Equipment Europe SARL Ancenis, France

6620-027 Free lift cylinder

[2000-01-26]

Frilyftscylinder; Freihubzylinder; Vérin de levée libre

Triplex Hi-Lo			595 SLL 16 354260 -	
Pos	Description	Pcs	Part No	Note
01	Cylinder compl. Cylinder kompl.; Zylinder kompl.; Verin compl.	1	161950-335	Lift height = 3350 mm Lyfthöjd = 3350 mm; Hubhöhe = 3350 mm; Hauteur d'élévation = 3350 mm
01	Cylinder compl. Cylinder kompl.; Zylinder kompl.; Verin compl.	1	161950-375	Lift height = 3750 mm Lyfthöjd = 3750 mm; Hubhöhe = 3750 mm; Hauteur d'élévation = 3750 mm
01	Cylinder compl. Cylinder kompl.; Zylinder kompl.; Verin compl.	1	161950-415	Liftheigt = 4150 mm Lyfthöjd = 4150 mm; Hubhöhe = 4150 mm; Hauteur d'élévation = 4150 mm
01	Cylinder compl. Cylinder kompl.; Zylinder kompl.; Verin compl.	1	161950-440	Lift height = 4400 mm Lyfthöjd = 4400 mm; Hubhöhe = 4400 mm; Hauteur d'élévation = 4400 mm
01	Cylinder compl. Cylinder kompl.; Zylinder kompl.; Verin compl.	1	161950-480	Liftheight = 4800 mm Lyfthöjd = 4800 mm; Hubhöhe = 4800 mm; Hauteur de levee = 4800 mm
01	Cylinder compl. Cylinder kompl.; Zylinder kompl.; Verin compl.	1	161950-540	Lift height = 5400 mm Lyfthöjd = 5400 mm; Hubhöhe = 5400 mm; Hauteur de levee = 5400 mm
02	Packing set Packningssats; Packungssatz; Jeux d´ étanchéite.	1	161948	
03	Cylinder pipe Cylinderrör; Zylinderrohr; Tube de cylindre	1	161944-335	
03	Cylinder pipe Cylinderrör; Zylinderrohr; Tube de cylindre	1	161944-375	
03	Cylinder pipe Cylinderrör; Zylinderrohr; Tube de cylindre	1	161944-415	
03	Cylinder pipe Cylinderrör; Zylinderrohr; Tube de cylindre	1	161944-440	
03	Cylinder pipe Cylinderrör; Zylinderrohr; Tube de cylindre	1	161944-480	
03	Cylinder pipe Cylinderrör; Zylinderrohr; Tube de cylindre	1	161944-540	
04	Piston Kolv; Kolben; Piston	1	155834	
05	Piston rod Kolvstång; Kolbenstange; Tige de piston	1	155742-335	
05	Piston rod Kolvstång; Kolbenstange; Tige de piston	1	155742-375	
05	Piston rod Kolvstång; Kolbenstange; Tige de piston	1	155742-415	
05	Piston rod Kolvstång; Kolbenstange; Tige de piston	1	155742-440	
05	Piston rod Kolvstång; Kolbenstange; Tige de piston	1	155742-480	
05	Piston rod Kolvstång; Kolbenstange; Tige de piston	1	155742-540	
11	Guide Styrning; Steuerung; Guidage	1	161946	
12	Bracket Fäste; Halterung; Support	1	151949	
13	Valve Ventil; Ventil; Soupape	1	29773	
14	Screw Skruv; Schraube; Vis	2	20996	
15	Air bleeder Luftventil; Luftnippel; Soupape (air)	1	24325	

© TOYOTA Industrial Equipment Europe SARL Ancenis, France

6680-001

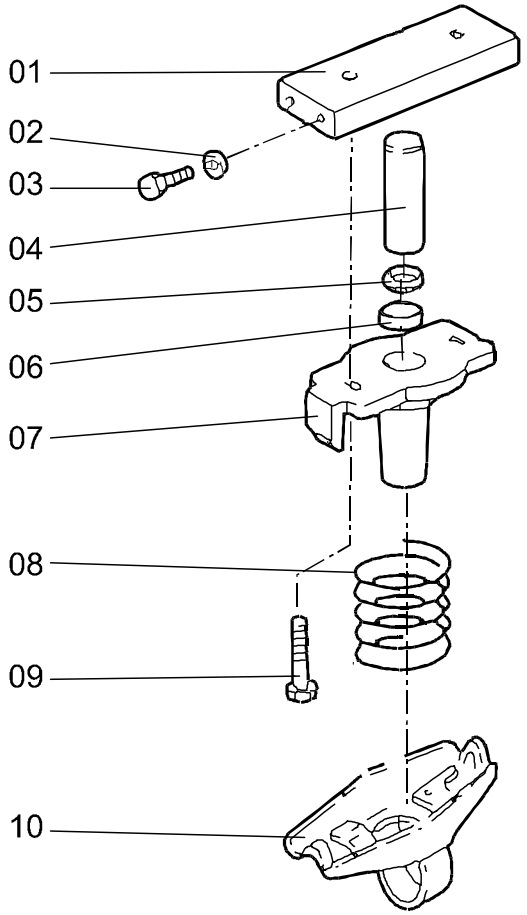

6680-001 Powertrak cylinder

[1998-02-07]

Powertrak cylinder; Powertrak Zylinder; Vérin TGP (Traction Grande Puissance)

			595 SLL 16	285755 -
Pos	Description	Pcs	Part No	Note
01	Bracket Fäste; Halterung; Support	1	132919	
02	Washer Bricka; Scheibe; Rondelle	4	20348	
03	Screw Skruv; Schraube; Vis	4	20599	
04	Piston Kolv; Kolben; Piston	1	132702	
05	Scraper Avskrapare; Abkratzer; Segment racleur	1	20749	
06	Sealing Tätning; Dichtung; Joint	1	132771-002	
07	Cylinder Cylinder; Zylinder; Verin	1	142553	
08	Spring Fjäder; Feder; Ressort	1	109568	
09	Screw Skruv; Schraube; Vis	2	26357	
10	Cradle Vagga; Wiege; Berceau	1	143090	

© TOYOTA Industrial Equipment Europe SARL Ancenis, France

© TOYOTA Industrial Equipment Europe SARL Ancenis, France

7100-006

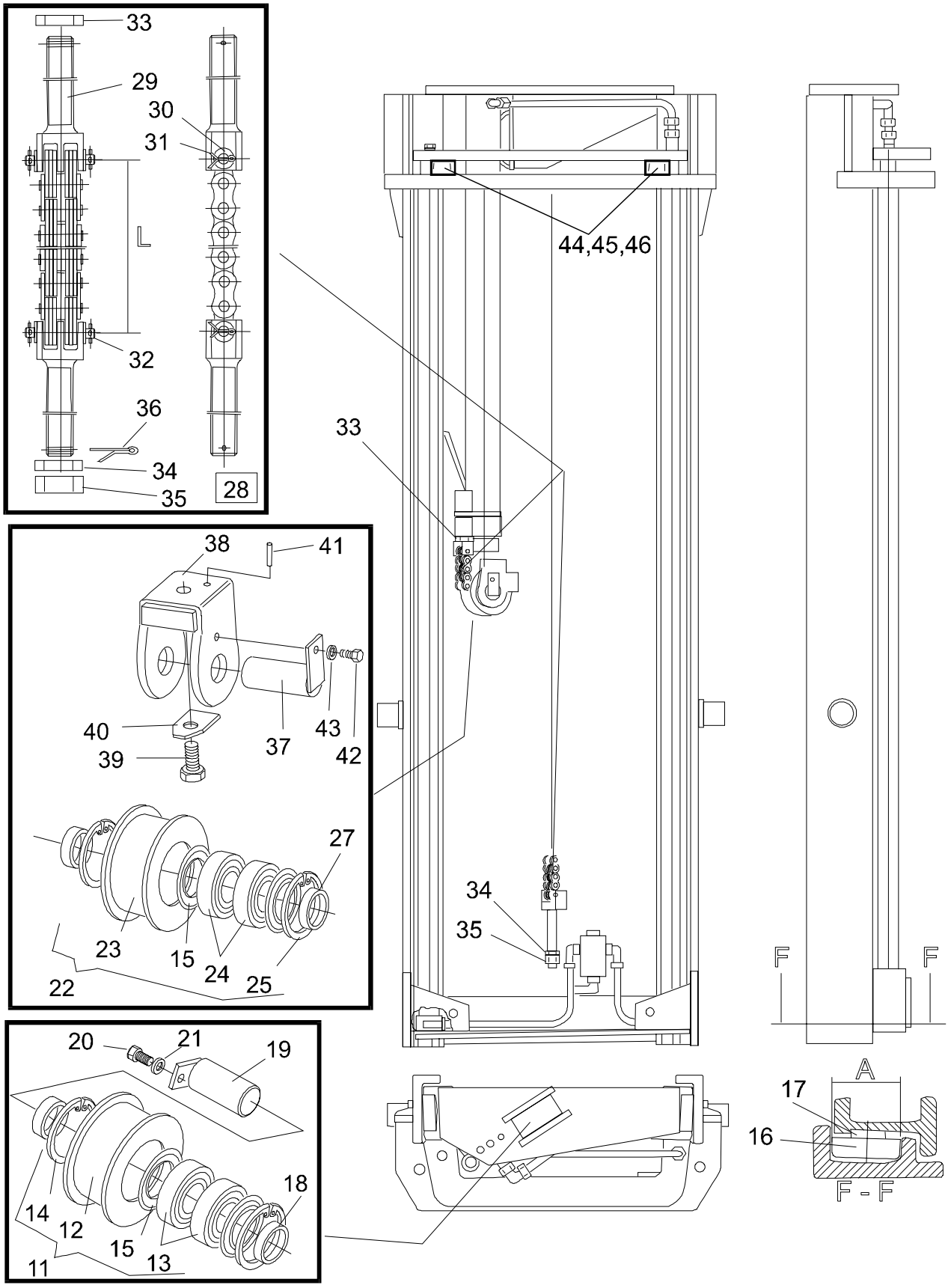

© TOYOTA Industrial Equipment Europe SARL Ancenis, France

7100-006 Main mast

[1998-05-18]

Huvudstativ/-mast; Haupthubgerüst/-mast; Mât principal

Duplex HiLo			595 SLL 16	268826 -
Pos	Description	Pcs	Part No	Note
11	Chain wheel(Complete) Kedjehjul(Komplett); Kettenrad(Komplett); Roue de chaine(Complet)	1	133369	
12	Roller Rulle; Rolle; Roleau	1	133368	
13	Bearing Lager; Lager; Roulement	2	26937	
14	Locking ring Spårring; Schliessring; Circlip	2	20076	
15	Sealing ring Tätningsring; Dichtungsring; Bague d´étanchéité	2	20902	
16	Roller(A = 78,2 mm, marked A) Rulle(A = 78,2 mm, märkt A); Rolle(A = 78,2 mm, marke A); Roleau(A = 78,2 mm, marqué A)		101423	
16	Roller(A = 78,6 mm, marked B) Rulle(A = 78,6 mm, märkt B); Rolle(A = 78,6 mm, marke B); Roleau(A = 78,6 mm, marqué B)		126011	
16	Roller(A = 78 mm, marked C) Rulle(A = 78 mm, märkt C); Rolle(A = 78 mm, marke C); Roleau(A = 78 mm, marqué C)		127698	
17	Distance piece(30 x 42 x 0,1) Distans; Distanz; Distance		21881	
17	Distance piece(30 x 42 x 0,2) Distans; Distanz; Distance		21882	
17	Distance piece(30 x 42 x 0,3) Distans; Distanz; Distance		21883	
17	Distance piece(30 x 42 x 0,5) Distans; Distanz; Distance		21884	
17	Distance piece(30 x 42 x 1,0) Distans; Distanz; Distance		21885	
18	Distance piece Distans; Distanz; Distance	1	101237	
19	Axle Axel; Achse; Axe	1	105392	
20	Screw Skruv; Schraube; Vis	1	23006	
21	Washer Bricka; Scheibe; Rondelle	1	20236	
22	Chain wheel(Complete) Kedjehjul(Komplett); Kettenrad(Komplett); Roue de chaine(Complet)	1	132553	
23	Roller Rulle; Rolle; Roleau	1	105514	
24	Bearing Lager; Lager; Roulement	2	26937	
25	Locking ring Spårring; Schliessring; Circlip	2	20076	
26	Sealing ring Tätningsring; Dichtungsring; Bague d´étanchéité	2	20902	
27	Distance piece Distans; Distanz; Distance	2	101237	
28	Lifting chain complete(L = 2419 mm) Lyftkedja komplett; Hubkette Komplett; Chaine d´élévation complet	1	139989-235	Lift height = 2350 mm Lyfthöjd = 2350 mm; Hubhöhe = 2350 mm; Hauter d'élévation = 2350 mm
28	Lifting chain complete(L = 2838 mm) Lyftkedja komplett; Hubkette Komplett; Chaine d´élévation complet	1	139989-290	Lift height = 2900 mm Lyfthöjd = 2900 mm; Hubhöhe = 2900 mm; Hauteur d'élévation = 2900 mm
28	Lifting chain complete(L = 3181 mm) Lyftkedja komplett; Hubkette Komplett; Chaine d´élévation complet	1	139989-335	Lift height = 3350 mm Lyfthöjd = 3350 mm; Hubhöhe = 3350 mm; Hauteur d'élévation = 3350 mm
28	Lifting chain complete(L = 3486 mm) Lyftkedja komplett; Hubkette Komplett; Chaine d´élévation complet	1	139989-375	Lift height = 3750 mm Lyfthöjd = 3750 mm; Hubhöhe = 3750 mm; Hauteur d'élévation = 3750 mm

© TOYOTA Industrial Equipment Europe SARL Ancenis, France

Pos	Description	Pcs	Part No	Note
28	Lifting chain complete(L = 3791 mm) Lyftkedja komplett; Hubkette Komplett; Chaine d´élévation complet	1	139989-415	Liftheigt = 4150 mm Lyfthöjd = 4150 mm; Hubhöhe = 4150 mm; Hauteur d'élévation = 4150 mm
29	Chain bolt Kedjebult; Kettenbolzen; Tourillon de chaine	2	101333	
30	Washer Bricka; Scheibe; Rondelle	4	20404	
31	Cotter pin Saxpinne; Gespalter stift; Goupille fendue	4	21445	
32	Axle Axel; Achse; Axe	2	26959	
33	Nut Mutter; Mutter; Ecrou	1	20390	
34	Nut Mutter; Mutter; Ecrou	1	20390	
35	Nut Mutter; Mutter; Ecrou	1	20160	
36	Cotter pin Saxpinne; Gespalter stift; Goupille fendue	1	20312	
37	Axle Axel; Achse; Axe	1	101298	
38	Wheel fork Hjulgaffel; Radgabel; Fourche de roue	1	139067	
39	Screw Skruv; Schraube; Vis	1	28708	
40	Washer Bricka; Scheibe; Rondelle	1	126723-006	
41	Locking pin Spännstift; Spannstift; Goupille	1	21316	
42	Screw Skruv; Schraube; Vis	1	23006	
43	Washer Bricka; Scheibe; Rondelle	1	20236	
44	Screw Skruv; Schraube; Vis	2	21750	
45	Damper Dämpare; Dämpfer; Attenteur	2	105388	
46	Washer Bricka; Scheibe; Rondelle		119374	Pcs as needed Antal efter behov; Anzhahl nach bedarf; Nombre éligible

© TOYOTA Industrial Equipment Europe SARL Ancenis, France

© TOYOTA Industrial Equipment Europe SARL Ancenis, France

7100-029

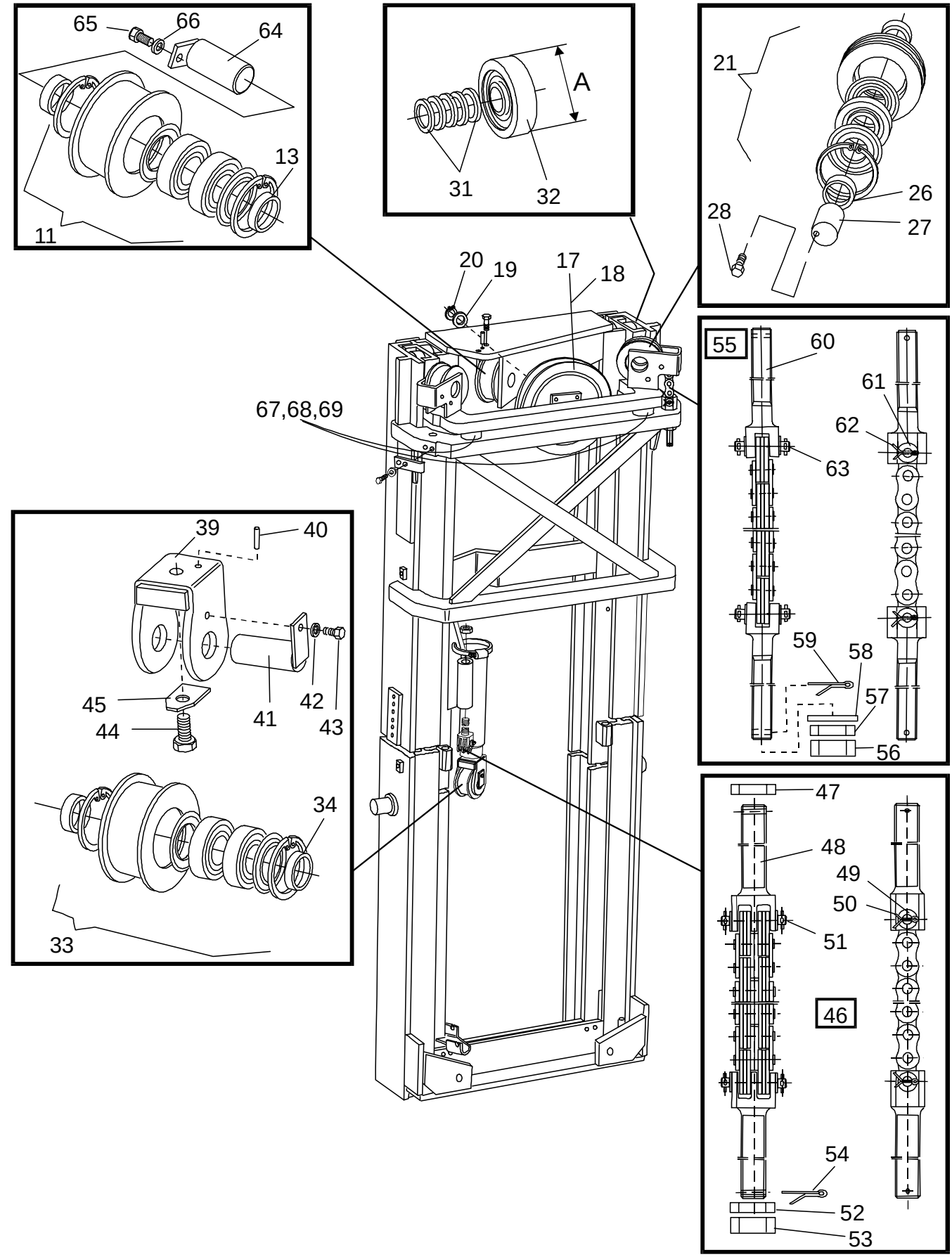

© TOYOTA Industrial Equipment Europe SARL Ancenis, France

7100-029 Main mast

[2000-03-29]

Huvudstativ/-mast; Haupthubgerüst/-mast; Mât principal

Triplex Hi - Lo			595 SLL 16	354260 -
Pos	Description	Pcs	Part No	Note
11	Chain wheel(Complete) Kedjehjul(Komplett); Kettenrad(Komplett); Roue de chaine(Complet)	1	176013	
13	Distance piece Distans; Distanz; Distance	2	101237	
17	Roller Rulle; Rolle; Roleau	1	101339	
18	Bush Bussning; Bague; Bague	1	126883-002	
19	Washer Bricka; Scheibe; Rondelle	1	20013	
20	Locking ring Spårring; Schliessring; Circlip	1	20019	
21	Chain wheel(Complete) Kedjehjul(Komplett); Kettenrad(Komplett); Roue de chaine(Complet)	2	176012	
25	Locking ring Spårring; Schliessring; Circlip	2	20076	
26	Distance piece Distans; Distanz; Distance	2	101341	
27	Axle Axel; Achse; Axe	2	137853	
28	Screw Skruv; Schraube; Vis	2	28835	
31	Distance piece(30 x 42 x 0,1) Distans; Distanz; Distance		21881	
31	Distance piece(30 x 42 x 0,2) Distans; Distanz; Distance		21882	
31	Distance piece(30 x 42 x 0,3) Distans; Distanz; Distance		21883	
31	Distance piece(30 x 42 x 0,5) Distans; Distanz; Distance		21884	
31	Distance piece(30 x 42 x 1,0) Distans; Distanz; Distance		21885	
32	Roller(A = 78,2 mm, marked A) Rulle(A = 78,2 mm, märkt A); Rolle(A = 78,2 mm, marke A); Roleau(A = 78,2 mm, marqué A)	4	101423	
32	Roller(A = 78,6 mm, marked B) Rulle(A = 78,6 mm, märkt B); Rolle(A = 78,6 mm, marke B); Roleau(A = 78,6 mm, marqué B)		126011	
32	Roller(A = 78 mm, marked C) Rulle(A = 78 mm, märkt C); Rolle(A = 78 mm, marke C); Roleau(A = 78 mm, marqué C)		127698	
33	Chain wheel(Complete) Kedjehjul(Komplett); Kettenrad(Komplett); Roue de chaine(Complet)	1	176013	
34	Distance piece Distans; Distanz; Distance	2	101237	
39	Wheel fork Hjulgaffel; Radgabel; Fourche de roue	1	139067	
40	Locking pin Spännstift; Spannstift; Goupille	1	21316	
41	Axle Axel; Achse; Axe	1	101298	
42	Washer Bricka; Scheibe; Rondelle	1	20236	
43	Screw Skruv; Schraube; Vis	1	23006	
44	Screw Skruv; Schraube; Vis	1	28708	
45	Washer Bricka; Scheibe; Rondelle	1	126723-006	
46	Chain complete Kedja komplett; Ketten komplett ; Chaine complete	1	177550-335	Lift height = 3350 mm Lyfthöjd = 3350 mm; Hubhöhe = 3350 mm; Hauteur d'élévation = 3350 mm

© TOYOTA Industrial Equipment Europe SARL Ancenis, France

Pos	Description	Pcs	Part No	Note
46	Chain complete Kedja komplett; Ketten komplett ; Chaine complete	1	177550-375	Lift height = 3750 mm Lyfthöjd = 3750 mm; Hubhöhe = 3750 mm; Hauteur d'élévation = 3750 mm
46	Chain complete Kedja komplett; Ketten komplett ; Chaine complete	1	177550-415	Liftheigt = 4150 mm Lyfthöjd = 4150 mm; Hubhöhe = 4150 mm; Hauteur d'élévation = 4150 mm
46	Chain complete Kedja komplett; Ketten komplett ; Chaine complete	1	177550-480	Liftheight = 4800 mm Lyfthöjd = 4800 mm; Hubhöhe = 4800 mm; Hauteur de levee = 4800 mm
46	Chain complete Kedja komplett; Ketten komplett ; Chaine complete	1	177550-540	Lift height = 5400 mm Lyfthöjd = 5400 mm; Hubhöhe = 5400 mm; Hauteur de levee = 5400 mm
47	Nut Mutter; Mutter; Ecrou	1	20390	
48	Chain bolt Kedjebult; Kettenbolzen; Tourillon de chaine	2	101333	
49	Washer Bricka; Scheibe; Rondelle	4	20404	
50	Cotter pin Saxpinne; Gespalter stift; Goupille fendue	4	20881	
51	Axle Axel; Achse; Axe	2	26959	
52	Nut Mutter; Mutter; Ecrou	1	20390	
53	Nut Mutter; Mutter; Ecrou	1	20160	
54	Cotter pin Saxpinne; Gespalter stift; Goupille fendue	2	20312	
55	Chain complete Kedja komplett; Ketten komplett ; Chaine complete	2	151070-335	Lift height = 3350 mm Lyfthöjd = 3350 mm; Hubhöhe = 3350 mm; Hauteur d'élévation = 3350 mm
55	Chain complete Kedja komplett; Ketten komplett ; Chaine complete	2	151070-375	Lift height = 3750 mm Lyfthöjd = 3750 mm; Hubhöhe = 3750 mm; Hauteur d'élévation = 3750 mm
55	Chain complete Kedja komplett; Ketten komplett ; Chaine complete	2	151070-415	Liftheigt = 4150 mm Lyfthöjd = 4150 mm; Hubhöhe = 4150 mm; Hauteur d'élévation = 4150 mm
55	Chain complete Kedja komplett; Ketten komplett ; Chaine complete	2	151070-480	Liftheight = 4800 mm Lyfthöjd = 4800 mm; Hubhöhe = 4800 mm; Hauteur de levee = 4800 mm
55	Chain complete Kedja komplett; Ketten komplett ; Chaine complete	2	151070-540	Lift height = 5400 mm Lyfthöjd = 5400 mm; Hubhöhe = 5400 mm; Hauteur de levee = 5400 mm
56	Nut Mutter; Mutter; Ecrou	4	20528	
57	Nut Mutter; Mutter; Ecrou	4	20006	
58	Washer Bricka; Scheibe; Rondelle	2	21431	
59	Cotter pin Saxpinne; Gespalter stift; Goupille fendue	2	20312	
60	Anchor bolt Fästbult; Ankerbolzen; Boulon de fixation	2	100839	
61	Washer Bricka; Scheibe; Rondelle	8	20404	
62	Cotter pin Saxpinne; Gespalter stift; Goupille fendue	8	21445	
63	Chain bolt Kedjebult; Kettenbolzen; Tourillon de chaine	4	105814	
64	Axle Axel; Achse; Axe	1	105392	
65	Screw Skruv; Schraube; Vis	1	23006	
66	Washer Bricka; Scheibe; Rondelle	1	20236	
67	Screw Skruv; Schraube; Vis	2	21750	

© TOYOTA Industrial Equipment Europe SARL Ancenis, France

Pos	Description	Pcs	Part No	Note
68	Damper Dämpare; Dämpfer; Attenteur	2	105388	
69	Washer Bricka; Scheibe; Rondelle		119374	

© TOYOTA Industrial Equipment Europe SARL Ancenis, France

7100-031

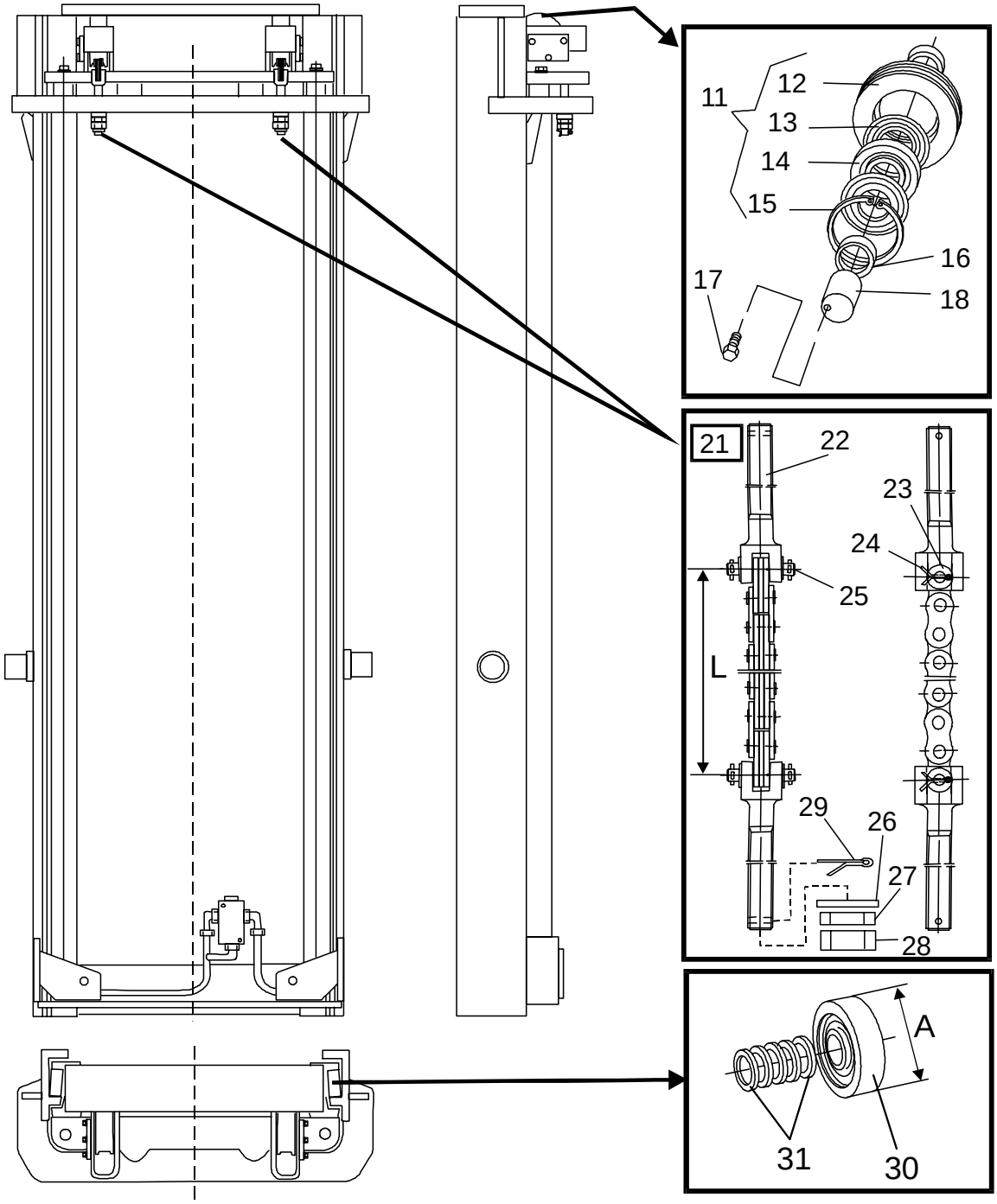

7100-031 Main mast

[2000-02-03]

Huvudstativ/-mast; Haupthubgerüst/-mast; Mât principal

Duplex Tele			595 SLL 16	354260 -
Pos	Description	Pcs	Part No	Note
11	Chain wheel(Complete) Kedjehjul(Komplett); Kettenrad(Komplett); Roue de chaine(Complet)	2	133338	
12	Roller Rulle; Rolle; Roleau	2	133337	
13	Sealing ring Tätningsring; Dichtungsring; Bague d´étanchéité	4	20902	
14	Bearing Lager; Lager; Roulement	2	26939	
15	Locking ring Spårring; Schliessring; Circlip	2	20076	
16	Distance piece Distans; Distanz; Distance	2	101341	

© TOYOTA Industrial Equipment Europe SARL Ancenis, France

Pos	Description	Pcs	Part No	Note
17	Screw Skruv; Schraube; Vis	2	28835	
18	Axle Axel; Achse; Axe	2	137853	
21	Lifting chain complete(L = 1391) Lyftkedja komplett; Hubkette Komplett; Chaine d´élévation complet	2	175912-235	Lift height = 3350 mm Lyfthöjd = 3350 mm; Hubhöhe = 3350 mm; Hauteur d'élévation = 3350 mm
21	Lifting chain complete(L = 1657) Lyftkedja komplett; Hubkette Komplett; Chaine d´élévation complet	2	175912-290	Lift height = 2900 mm Lyfthöjd = 2900 mm; Hubhöhe = 2900 mm; Hauteur d'élévation = 2900 mm
21	Lifting chain complete(L = 1886) Lyftkedja komplett; Hubkette Komplett; Chaine d´élévation complet	2	175912-335	Lift height = 3350 mm Lyfthöjd = 3350 mm; Hubhöhe = 3350 mm; Hauteur d'élévation = 3350 mm
21	Lifting chain complete(L = 2076) Lyftkedja komplett; Hubkette Komplett; Chaine d´élévation complet	2	175912-375	Lift height = 3750 mm Lyfthöjd = 3750 mm; Hubhöhe = 3750 mm; Hauteur d'élévation = 3750 mm
21	Lifting chain complete(L = 2267) Lyftkedja komplett; Hubkette Komplett; Chaine d´élévation complet	2	175912-415	Liftheigt = 4150 mm Lyfthöjd = 4150 mm; Hubhöhe = 4150 mm; Hauteur d'élévation = 4150 mm
22	Anchor bolt Fästbult; Ankerbolzen; Boulon de fixation	4	100839	
23	Washer Bricka; Scheibe; Rondelle	8	20404	
24	Cotter pin Saxpinne; Gespalter stift; Goupille fendue	8	21445	
25	Chain bolt Kedjebult; Kettenbolzen; Tourillon de chaine	4	105814	
26	Washer Bricka; Scheibe; Rondelle	4	21431	
27	Nut Mutter; Mutter; Ecrou	4	20006	
28	Nut Mutter; Mutter; Ecrou	4	20528	
29	Cotter pin Saxpinne; Gespalter stift; Goupille fendue	4	20312	
30	Roller(A = 78,2 mm, marked A) Rulle(A = 78,2 mm, märkt A); Rolle(A = 78,2 mm, marke A); Roleau(A = 78,2 mm, marqué A)		101423	
30	Roller(A = 78,6 mm, marked B) Rulle(A = 78,6 mm, märkt B); Rolle(A = 78,6 mm, marke B); Roleau(A = 78,6 mm, marqué B)		126011	
30	Roller(A = 78 mm, marked C) Rulle(A = 78 mm, märkt C); Rolle(A = 78 mm, marke C); Roleau(A = 78 mm, marqué C)		127698	
31	Distance piece(30 x 42 x 0,1) Distans; Distanz; Distance		21881	
31	Distance piece(30 x 42 x 0,2) Distans; Distanz; Distance		21882	
31	Distance piece(30 x 42 x 0,3) Distans; Distanz; Distance		21883	
31	Distance piece(30 x 42 x 0,5) Distans; Distanz; Distance		21884	
31	Distance piece(30 x 42 x 1,0) Distans; Distanz; Distance		21885	
32	Screw Skruv; Schraube; Vis	2	21750	
33	Damper Dämpare; Dämpfer; Attenteur	2	105388	
34	Washer Bricka; Scheibe; Rondelle		119374	

© TOYOTA Industrial Equipment Europe SARL Ancenis, France

7190-012

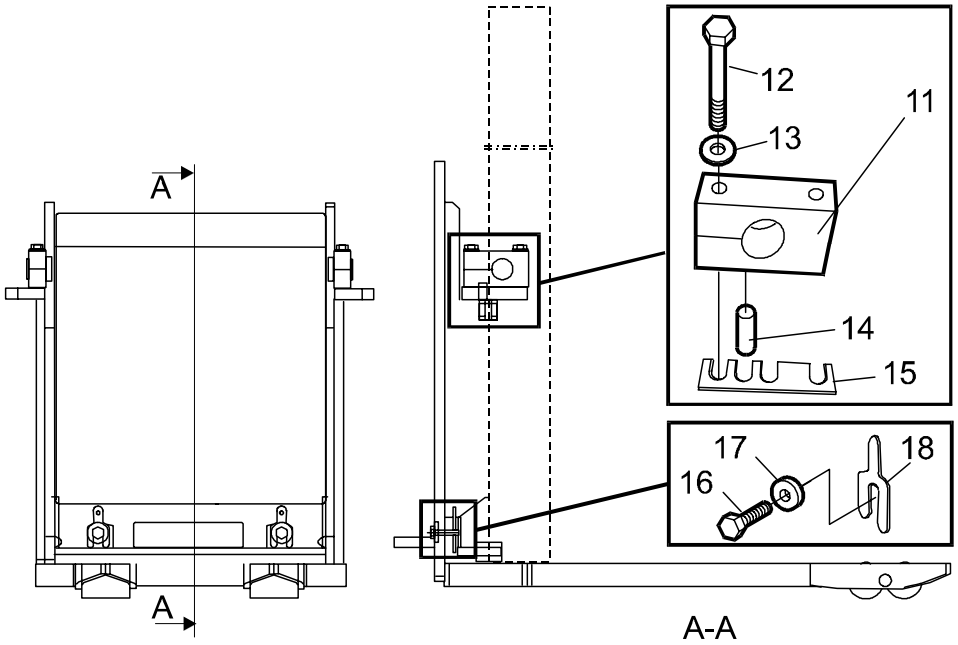

7190-012 Main mast suspension

[1998-06-05]

Huvudstativinfästning; Befestigung Haupthubgerüst; Suspension mât principal

			595 SLL 16 292314 -	
Pos	Description	Pcs	Part No	Note
11	Bracket Fäste; Halterung; Support	2	141390	
12	Screw Skruv; Schraube; Vis	4	20766	
13	Washer Bricka; Scheibe; Rondelle	4	20228	
14	Pin Pinne; Stäbchen; Cheville	2	141525	
15	Shim Shims; Schim; Cale	2	143091	
16	Screw Skruv; Schraube; Vis	2	24383	
17	Washer Bricka; Scheibe; Rondelle	2	21396	
18	Shim(Pcs as needed) Shims(Antal efter behov); Schim(Anzhahl nach bedarf); Cale(Nombre éligible)	2	133814	

© TOYOTA Industrial Equipment Europe SARL Ancenis, France

© TOYOTA Industrial Equipment Europe SARL Ancenis, France

7420-088

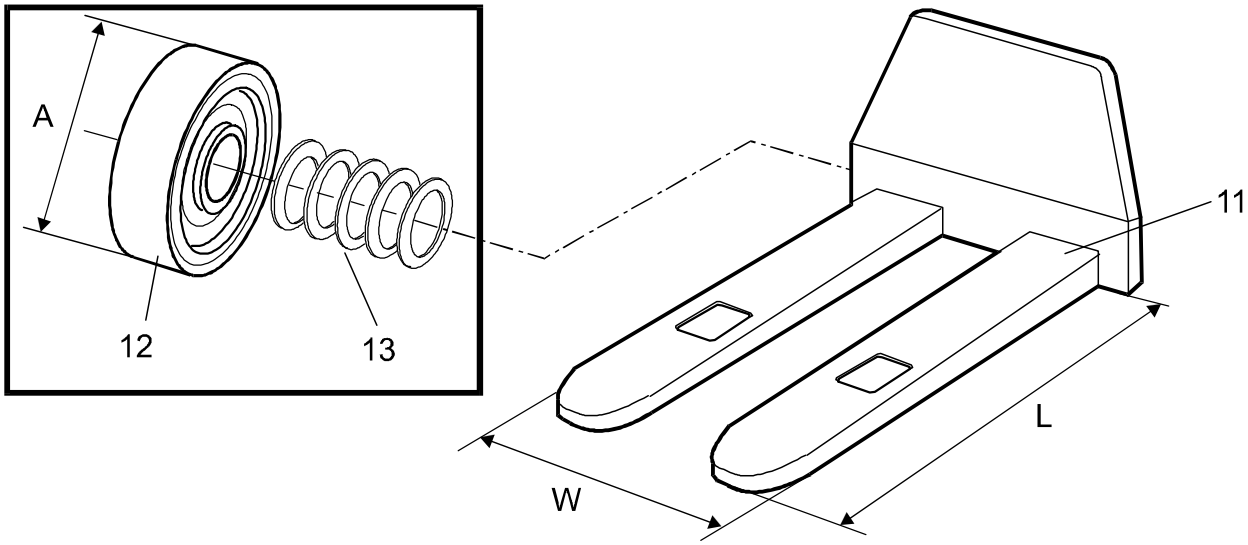

Some fork carriage part numbers depend on fork length/width across forks.
Please contact your aftersales department.
En del av gaffelvagnens res.art.nr bestäms av gaffellängd/ bredd över gafflarna.
Kontakta er reservdelsförsäljning avdelning
Gewiss Teilnummern für Gabelwagen sind von der Gabellänge und/oder dem Mass über die Gabeln abhängig.
Wir bitten Sie, sich mit der Ersatzteilung in Verbindung zu setzen.
La référence du tablier depend de la longeur et de la largeur hors tout des fourches.
'il vous plait contactez le Service Aprés vente.

7420-088 Fork carriage unit, integrated sideshift, fork spread [2000-01-28]

Gaffelvagn med sideshift/gaffelspridning; Gabelwagen/-mit Seitenschieber/Zinkenverstellung; Tablier porte-fourches/de déplacement latéral, écarteur de fourche intégré

			595 SLL 16	354260 -
Pos	Description	Pcs	Part No	Note
11	Fork carriage(L = 1150 mm, W = 570 mm) Gaffelvagn; Gabelwagen; Chariot porte-fourche	1	160404-265	Duplex HiLo
11	Fork carriage(L = 1150 mm, W = 685 mm) Gaffelvagn; Gabelwagen; Chariot porte-fourche	1	160404-465	Duplex HiLo
11	Fork carriage(L = 1150 mm, W = 570 mm) Gaffelvagn; Gabelwagen; Chariot porte-fourche	1	175495-265	Triplex Hi-Lo
11	Fork carriage(L = 1150 mm, W = 685 mm) Gaffelvagn; Gabelwagen; Chariot porte-fourche	1	175495-465	Triplex Hi-Lo
11	Fork carriage(L = 1150 mm, W = 570 mm) Gaffelvagn; Gabelwagen; Chariot porte-fourche	1	175746-265	Duplex Tele
11	Fork carriage(L = 1150 mm, W = 685 mm) Gaffelvagn; Gabelwagen; Chariot porte-fourche	1	175746-465	Duplex Tele
12	Roller(A = 78,2 mm, marked A) Rulle(A = 78,2 mm, märkt A); Rolle(A = 78,2 mm, marke A); Roleau(A = 78,2 mm, marqué A)		101423	
12	Roller(A = 78,6 mm, marked B) Rulle(A = 78,6 mm, märkt B); Rolle(A = 78,6 mm, marke B); Roleau(A = 78,6 mm, marqué B)		126011	
12	Roller(A = 78 mm, marked C) Rulle(A = 78 mm, märkt C); Rolle(A = 78 mm, marke C); Roleau(A = 78 mm, marqué C)		127698	
13	Distance piece(30 x 42 x 0,1) Distans; Distanz; Distance		21881	
13	Distance piece(30 x 42 x 0,2) Distans; Distanz; Distance		21882	

© TOYOTA Industrial Equipment Europe SARL Ancenis, France

Pos	Description	Pcs	Part No	Note
13	Distance piece(30 x 42 x 0,3) Distans; Distanz; Distance		21883	
13	Distance piece(30 x 42 x 0,5) Distans; Distanz; Distance		21884	
13	Distance piece(30 x 42 x 1,0) Distans; Distanz; Distance		21885	

© TOYOTA Industrial Equipment Europe SARL Ancenis, France

9500-055

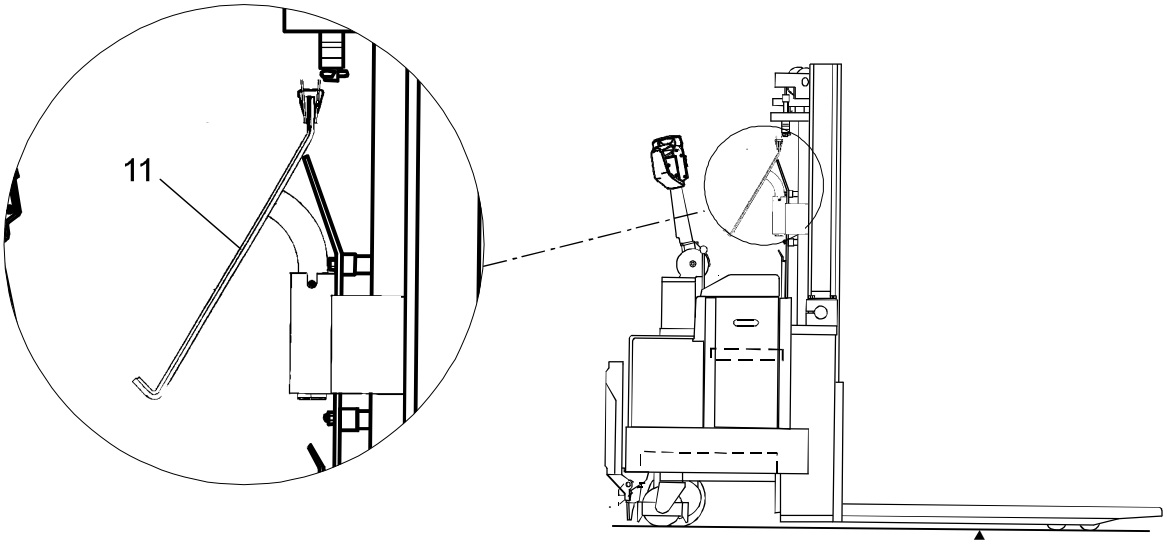

9500-055 Other extra equipment

[1998-08-11]

Extra utrustning övrigt; Zusatzausrüstung Sonstiges; Autre équipement supplémentaire

Writing table; Skrivpulpet; Stauscheibe; Table			595 SLL 16	268826 -
Pos	Description	Pcs	Part No	Note
11	Writing table(Complete) Skrivpulpet(Komplett); Stauscheibe(Komplett); Table(Complet)	1	145597	

© TOYOTA Industrial Equipment Europe SARL Ancenis, France

9500-057

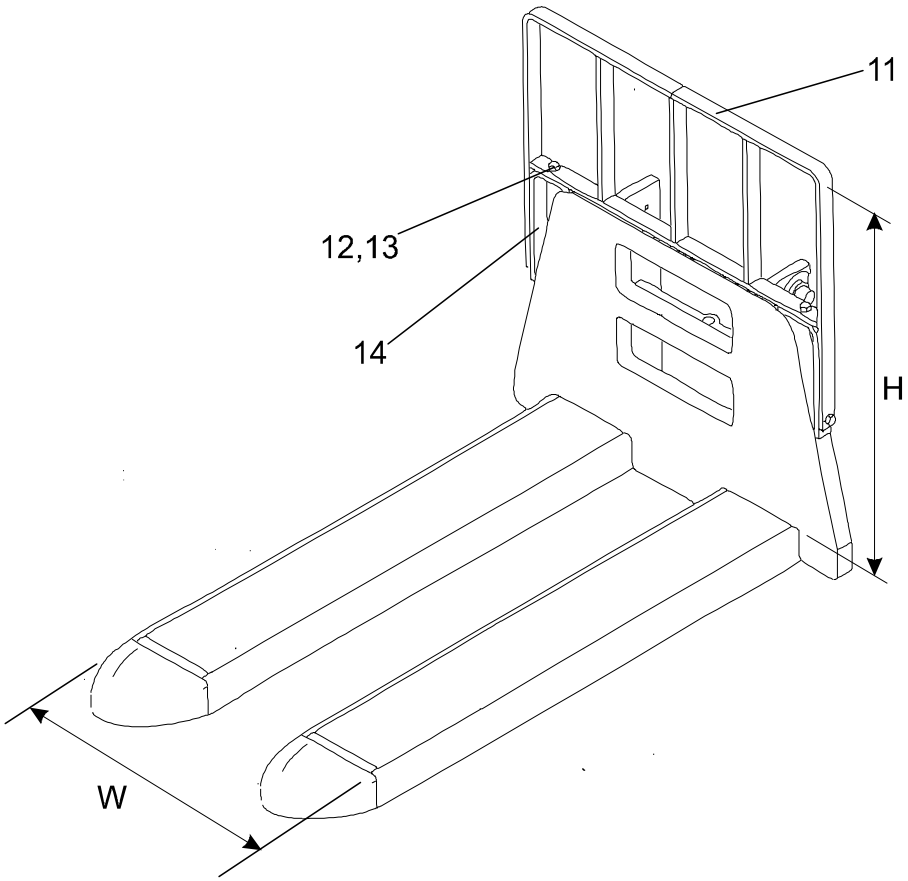

9500-057 Other extra equipment

[2000-06-08]

Extra utrustning övrigt; Zusatzausrüstung Sonstiges; Autre équipement supplémentaire

Load support; Laststöd; Lastschutzgitter; Garde de charge			595 SLL 16 306880 -	
Pos	Description	Pcs	Part No	Note
11	Load guard Laststöd; Lastschutzgitter; Garde de charge	1	143343	W = 520/570 mm H = 760 mm
11	Load guard Laststöd; Lastschutzgitter; Garde de charge	1	143344	W = 520/570 mm H = 1000 mm
12	Screw Skruv; Schraube; Vis	4	20044	
13	Washer Bricka; Scheibe; Rondelle	4	20348	
14	Bracket Fäste; Halterung; Support	2	145106	

© TOYOTA Industrial Equipment Europe SARL Ancenis, France

9550-005

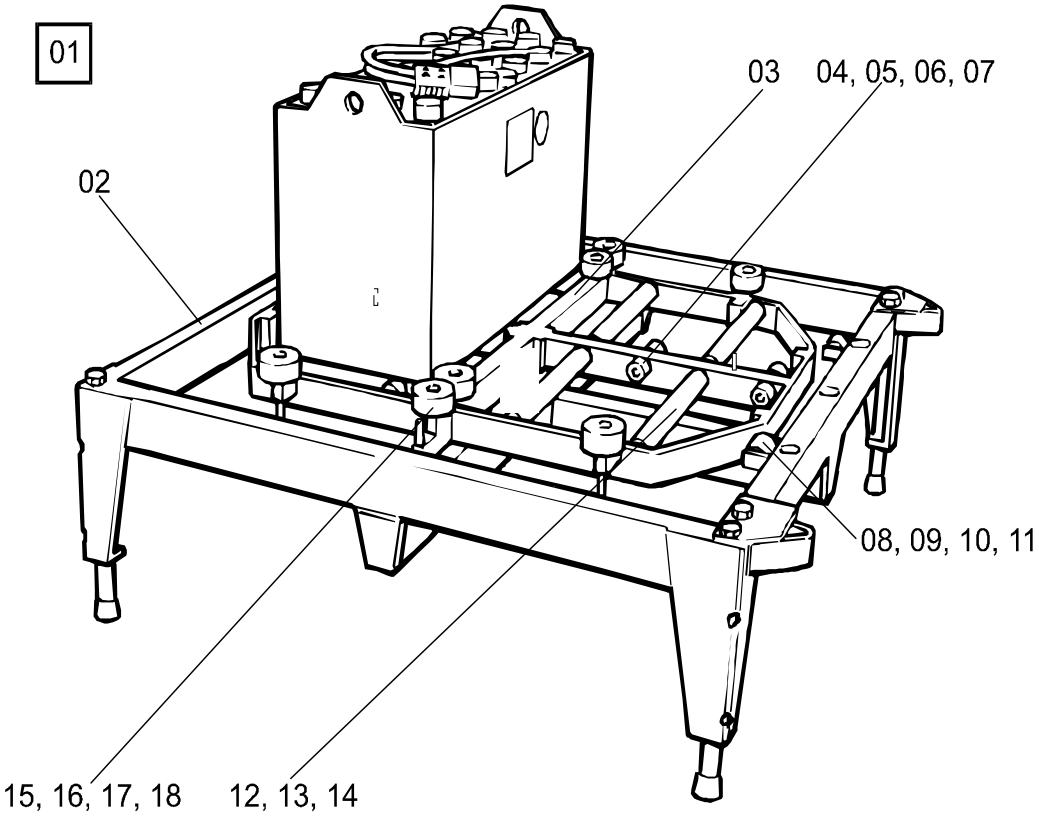

9550-005 Battery changing equipment

[1998-02-09]

Batteribytesanordning; Batteriewechselvorrichtung; Equipement de changement batterie

			595 SLL 16	285755 -
Pos	Description	Pcs	Part No	Note
01	Battery changing equip. compl. Batteribytesanordning kompl.; Batteriewechselvorrichtung kompl.; Changer de batterie compl.	1	128480	
02	Frame(outer) Ram(yttre); Rahmen(aussen); Cadre(externe)	1	120858	
03	Frame(inner) Ram(inre); Rahmen(innen); Cadre(intérieur)	1	120868	
04	Roller Rulle; Rolle; Roleau	16	110725	
05	Axle Axel; Achse; Axe	8	130530	
06	Washer Bricka; Scheibe; Rondelle	32	20882	
07	Cotter pin Saxpinne; Gespalter stift; Goupille fendue	16	21864	
08	Axle Axel; Achse; Axe	2	130531	
09	Roller Rulle; Rolle; Roleau	2	110725	
10	Cotter pin Saxpinne; Gespalter stift; Goupille fendue	4	21864	
11	Washer Bricka; Scheibe; Rondelle	8	20882	
12	Roller Rulle; Rolle; Roleau	8	132531	
13	Axle Axel; Achse; Axe	8	120898-001	
14	Washer Bricka; Scheibe; Rondelle	16	21016	
15	Wheel Hjul; Rad; Roue	8	47150	

© TOYOTA Industrial Equipment Europe SARL Ancenis, France

Pos	Description	Pcs	Part No	Note
16	Pin Tapp; Zapfen; Pivot	8	120883	
17	Locking ring Spårring; Schliessring; Circlip	8	20173	
18	Washer Bricka; Scheibe; Rondelle	8	20348	

© TOYOTA Industrial Equipment Europe SARL Ancenis, France