TOYOTA

Powered Pallet Truck
7 PLL 24

Valid for machine number: 410997 AT-

Only valid for machine number:

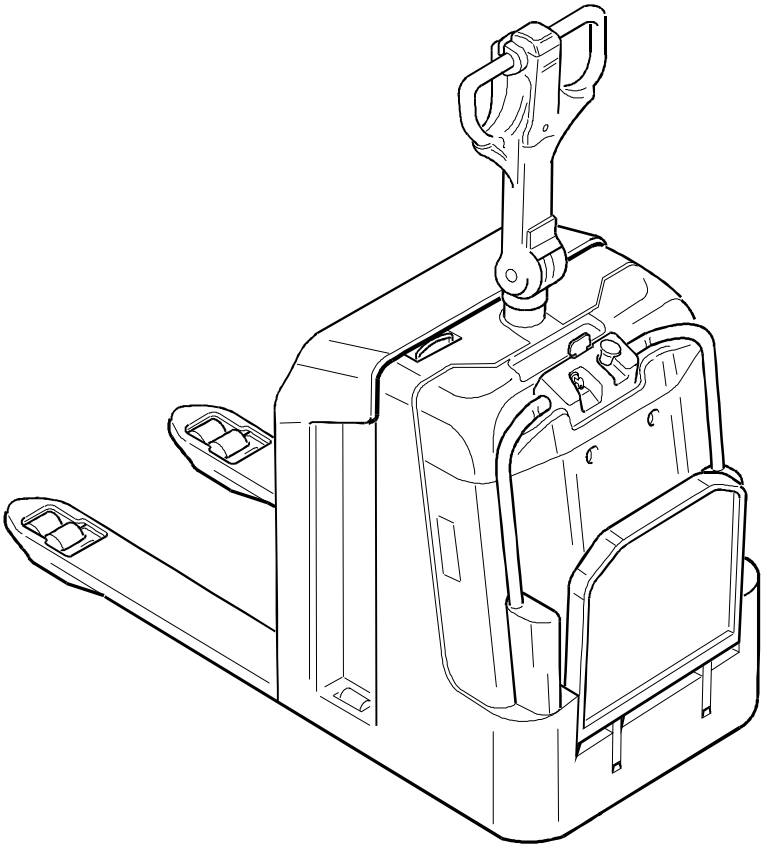

Spare Parts Catalogue

Ordering number 181268

Date ..... 2001-04-02 / ESID

© TOYOTA Industrial Equipment Europe SARL Ancenis, France

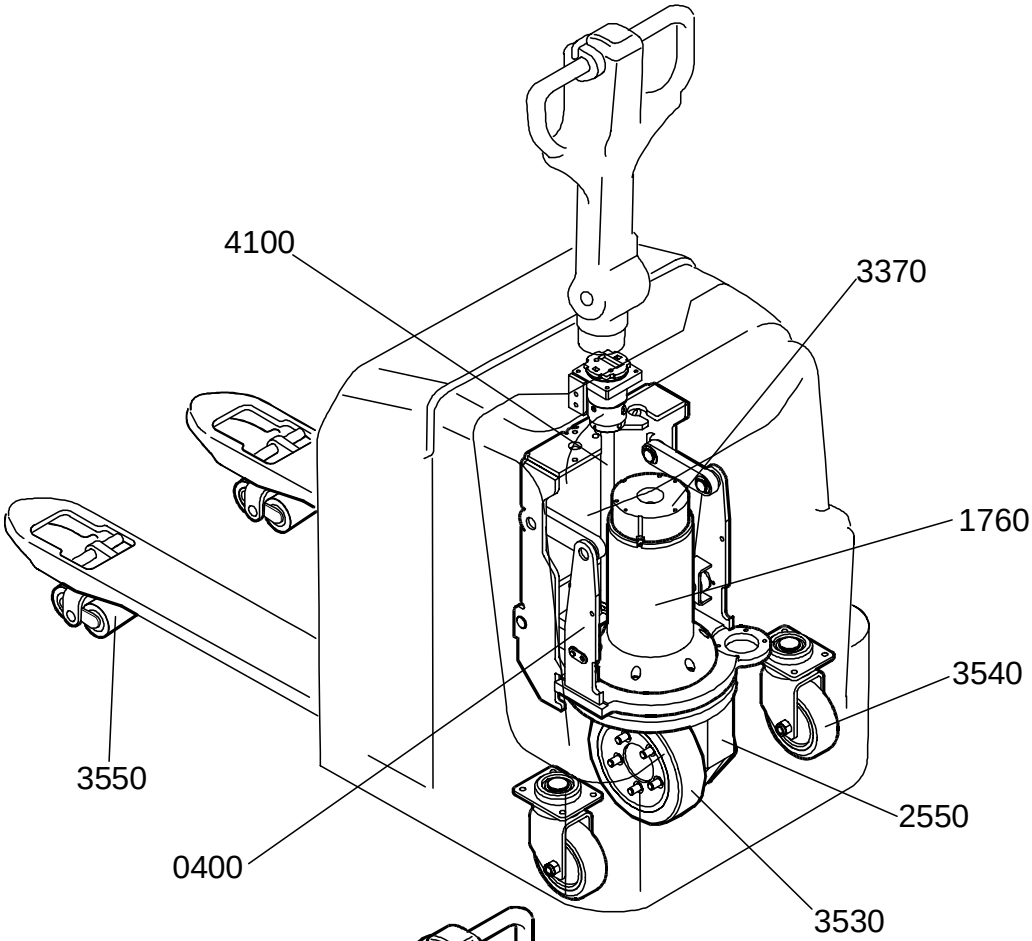

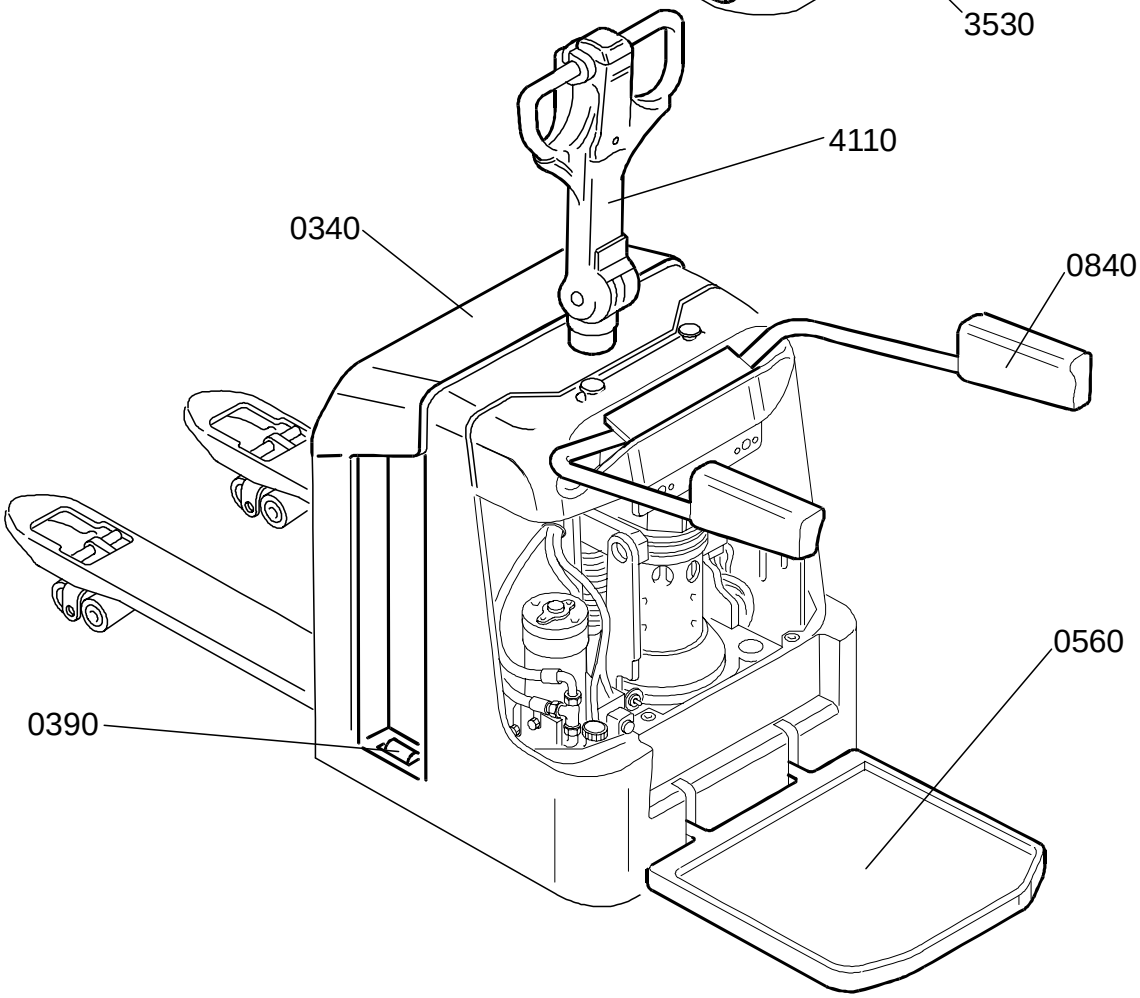

© TOYOTA Industrial Equipment Europe SARL Ancenis, France

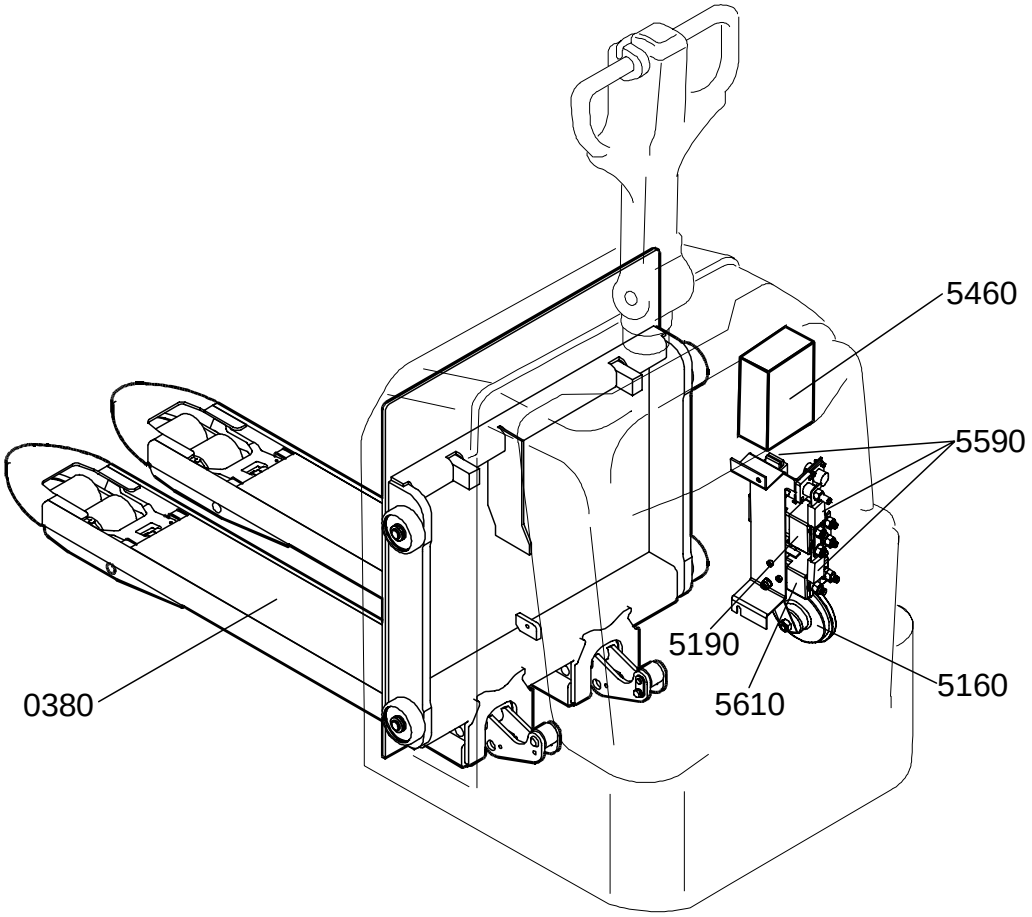

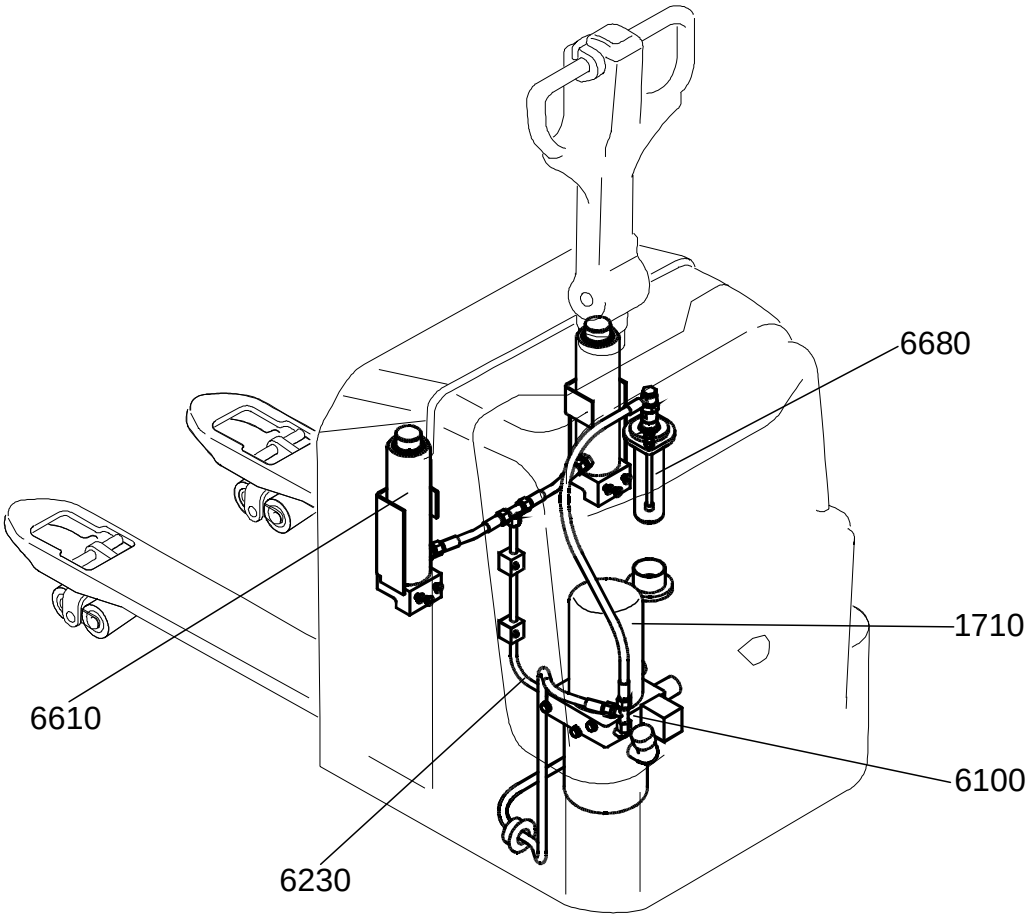

© TOYOTA Industrial Equipment Europe SARL Ancenis, France

0000 Chassis

Chassi; Chassis; Châssis

0340-193 Inspection covers
Huvar, luckor; Hauben, Abdeckungen; Capots, couvercles

0340-194 Inspection covers
Huvar, luckor; Hauben, Abdeckungen; Capots, couvercles

0380-127 Fork frame (low lifters)
Gaffelstomme (låglyftare); Gabelchassis (Niederhubwagen); Châssis (transpalettes)

0390-089 Battery compartment parts
Batteriutrymmesdelar; Batterieraumteile; Pièce de compartiment batterie

0390-090 Battery compartment parts
Batteriutrymmesdelar; Batterieraumteile; Pièce de compartiment batterie

0390-093 Battery compartment parts
Batteriutrymmesdelar; Batterieraumteile; Pièce de compartiment batterie

0390-094 Battery compartment parts
Batteriutrymmesdelar; Batterieraumteile; Pièce de compartiment batterie

0390-095 Battery compartment parts
Batteriutrymmesdelar; Batterieraumteile; Pièce de compartiment batterie

0390-096 Battery compartment parts
Batteriutrymmesdelar; Batterieraumteile; Pièce de compartiment batterie

0400-020 Frame/chassis components **Gearbox fixing points**
Ram-monterade detaljer; Chassisanbauteile; Composants du châssis

0560-055 Platform incl. fixing points
Åkplattform med infästning; Fahrerplattform mit Befestigung; Plateforme et fixations

0840-038 Driver protection
Förarskydd; Fahrerschutz; Protection de cariste

0840-057 Driver protection
Förarskydd; Fahrerschutz; Protection de cariste

0850-153 Signs, warnings, decals
Skyltar, varningar, dekaler; Schilder, Warnzeichen, Aufkleber; Vignettes, avertissements, autocollants

1000 Motors

Motorer; Motoren; Moteurs

1710-018 Electric pump motor
Elektrisk pumpmotor; Elektro-Pumpenmotor; Moteur de pompe électrique

1730-009 Electric steering motor
Elektrisk styrmotor; Elektro-Lenkmotor; Moteur de direction électrique

1760-014 Electric drive motor
Elektrisk åkmotor; Elektro-Fahrmotor; Moteur de traction électrique

© TOYOTA Industrial Equipment Europe SARL Ancenis, France

2000 Transmission/Drive gear

Kraftöverföring/Drivväxel; Kraftübertragung/Fahrgetriebe; Transmission/ Groupe de traction

2550-031 Mechanical drive gear unit
Drivaggregat/-växel; Antriebsaggregat/-getriebe; Groupe de traction, réducteur

3000 Brake/Wheel/Caterpillar system

Broms-/Hjul/Bandsystem; Brems-/Rad-/Bandsystem; Freins/Roues/ Chenilles

3370-012 Electromagnetic parking brake
El-parkeringsbroms, magnetbroms; Elektro-Feststellbremse, Magnetbremse; Frein de stationnement électromagnétique

3530-030 Drive wheel
Drivhjul; Antriebsrad; Roue motrice

3540-030 Support/castor wheels
Stöd-/länkhjul; Stützräder/Gelenkrollen; Roues stabilisatrices/pivotantes

3550-088 Fork/support arm wheels
Gaffel-/stödbenshjul; Gabel-/Stützarmrollen; Roues bras-support

3580-024 Guide rollers/wheels
Löp-/sidostyrningshjul; Laufrollen, Seitenführungsrollen; Galets/roues de guidage

4000 Steering system

Styrsystem; Steuer-/Lenksystem; Système de direction

4100-001 Mechanical steering system
Mekaniskt styrsystem; Mechanische Lenkanlage; Système de direction mécanique

4110-187 Steering arm / wheel / lever
Styr- arm/ratt/spak; Deichsel, Lenkrad-hebel; Timon/volant/levier de direction

4300-003 Electric steering system
Elektriskt styrsystem; Elektro-Lenkung ; Système de direction électrique

5000 Electrical system

Elektriskt system; Elektroanlage; Système électrique

5160-032 General alarm signals (audible/visual)
Signal/larm (ljud-/ljus-); Warn-/Alarmsignale (Aukust./Opt.); Avertisseur (sonore/lumineux), dispositifs dalarme'

5190-030 Battery cut out connector/contactor
Batterifrånskiljare, huvudkontaktor; Batterietrennung, Hauptkontaktor; Coupe-circuit de batterie, contacteur

5190-038 Battery cut out connector/contactor
Batterifrånskiljare, huvudkontaktor; Batterietrennung, Hauptkontaktor; Coupe-circuit de batterie, contacteur

© TOYOTA Industrial Equipment Europe SARL Ancenis, France

5310-057 Start/stop switch
Start/stoppströmställare; Schalter Fahren/Anhalten; Interrupteur (coupe-circuit) démarrage/arrêt

5460-035 Transistor panel
Transistorpanel ; Transistorpanel; Panneau transistor

5590-014 Work function harnesses/ fuse
Arbetsfunktionskablage/ -säkring; Steurstromverkabelung/ -Sicherung; Câblage/ fusible fonction de travail

5600-001 Power system for working function
Effektsystem arbetsfunktion; Leistungssystem Arbeitsfunktion; Circuit (Puissance) fonction de travail

5610-015 Pump contactor
Pumpkontaktor; Pumpenmotorkontaktor; Contacteur (moteur) de pompe

6000 Hydraulic/pneumatic system

Hydraulik/pneumatik; Hydraulikanlage/Pneumatik; Système hydraulique/pneumatique

6100-062 Hydraulic unit
Hydraulaggregat; Hydraulikaggregat; Unité hydraulique

6230-028 Hydraulic lines chassis
Chassimonterade hydraulledningar; Hydraulikleitungen Chassis; Circuits hydrauliques châssis

6610-037 Main lift cylinders
Huvudlyftcylindrar; Haupthubzylinder; Vérin de levage, principal

6680-007 Powertrak cylinder
Powertrak cylinder; Powertrak Zylinder; Vérin TGP (Traction Grande Puissance)

9000 Options/attachments

Tillbehör/extrautrustning; Zubehör /Zusatzausrüstung; Equipement supplémentaire/Options

9420-015 Truck log device, code locking device
Truck logg utrustn., kodlås; Truck Log System, Codesperre; Système Optigest, verrouillage (blocage) code

9500-187 Other extra equipment **Load support**
Extra utrustning övrigt; Zusatzausrüstung Sonstiges; Autre équipement supplémentaire

9500-202 Other extra equipment
Extra utrustning övrigt; Zusatzausrüstung Sonstiges; Autre équipement supplémentaire

9500-203 Other extra equipment
Extra utrustning övrigt; Zusatzausrüstung Sonstiges; Autre équipement supplémentaire

9550-013 Battery changing equipment
Batteribytesanordning; Batteriewechselvorrichtung; Equipement de changement batterie

9999-007 Information
Information; Information; Information

© TOYOTA Industrial Equipment Europe SARL Ancenis, France

© TOYOTA Industrial Equipment Europe SARL Ancenis, France

0340-193

P0013027

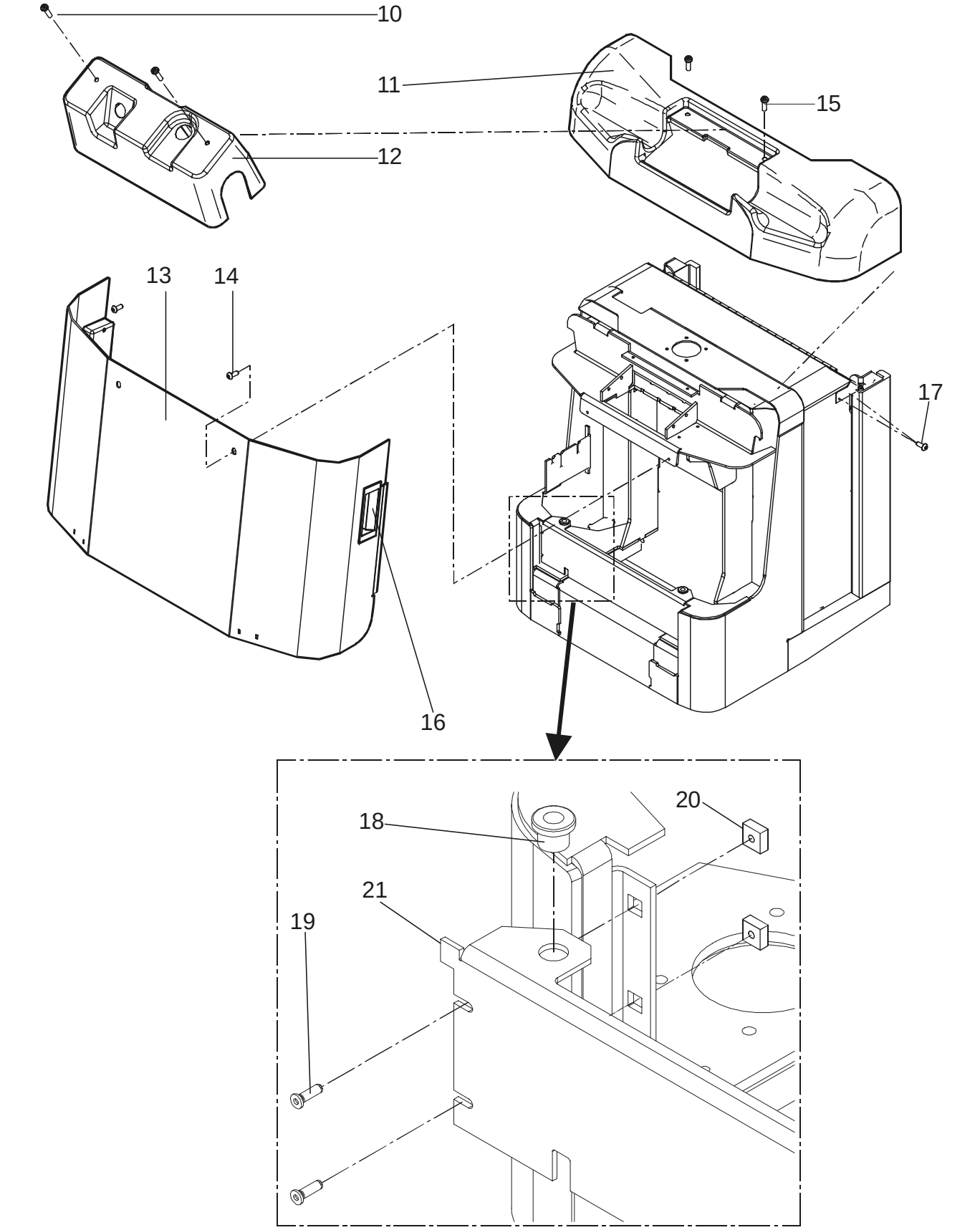

© TOYOTA Industrial Equipment Europe SARL Ancenis, France

0340-193 Inspection covers

[2001-04-02]

Huvar, luckor; Hauben, Abdeckungen; Capots, couvercles

			680 7 PLL 24	410997 -
Pos	Description	Pcs	Part No	Note
10	Screw Skruv; Schraube; Vis	2	20938	
11	Housing Kåpa; Haus; Chape	1	172634	
12	Housing Kåpa; Haus; Chape	1	173190	
13	Cover. Lucka; Deckel; Couvercle	1	172633-031	
14	Screw Skruv; Schraube; Vis	2	173212	
15	Screw Skruv; Schraube; Vis	2	173212	
16	Handle Handtag; Handgriff; Poignée.	2	173260	
17	Screw Skruv; Schraube; Vis	4	29982	
18	Guide Genomföring; Durcgführung; Guide	2	144087	
19	Screw Skruv; Schraube; Vis	4	177874	
20	Nut Mutter; Mutter; Ecrou	4	171406	
21	Cover. Lucka; Deckel; Couvercle	1	172626-031	

© TOYOTA Industrial Equipment Europe SARL Ancenis, France

0340-194

P0013028

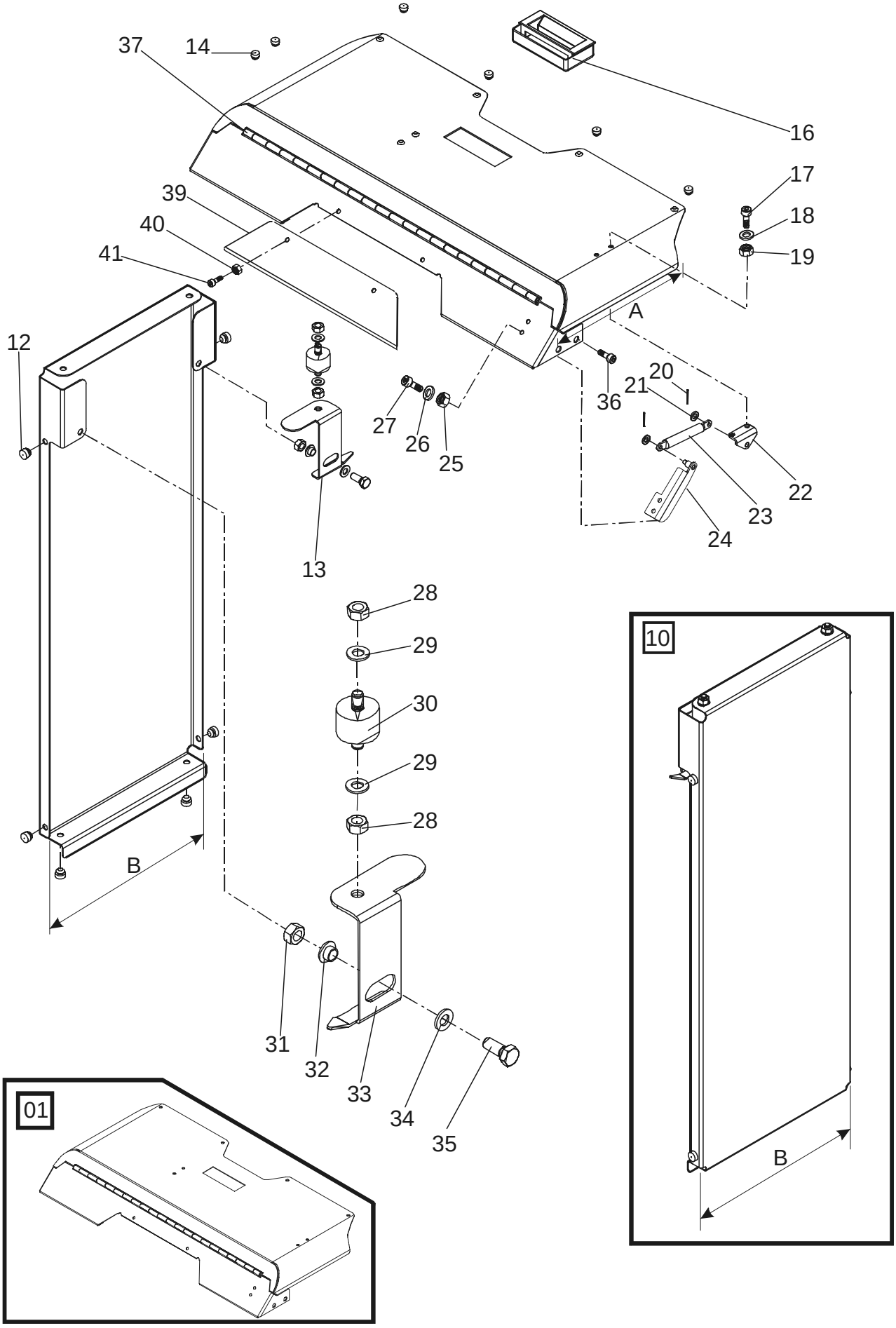

© TOYOTA Industrial Equipment Europe SARL Ancenis, France

0340-194 Inspection covers

[2001-04-02]

Huvar, luckor; Hauben, Abdeckungen; Capots, couvercles

			680 7 PLL 24	410997 -
Pos	Description	Pcs	Part No	Note
01	Cover.(Complete) Lucka(Komplett); Deckel(Komplett); Couvercle(Complet)	1	177785-031	A = 340 mm
01	Cover.(Complete) Lucka(Komplett); Deckel(Komplett); Couvercle(Complet)	1	177786-031	A = 426 mm
10	Cover.(Complete) Lucka(Komplett); Deckel(Komplett); Couvercle(Complet)	2	176475-031	B = 207 mm
10	Cover.(Complete) Lucka(Komplett); Deckel(Komplett); Couvercle(Complet)	2	176476-031	B = 277 mm
12	Damper Dämpare; Dämpfer; Attenteur	6	28078	
13	Hook Hake; Haken; Crochet	2	174878	Rear Bakre; Hinter; arrière
14	Damper Dämpare; Dämpfer; Attenteur	6	28078	
16	Handle Handtag; Handgriff; Poignée.	1	173260	
17	Screw Skruv; Schraube; Vis	2	29606	
18	Washer Bricka; Scheibe; Rondelle	2	20375	
19	Nut Mutter; Mutter; Ecrou	2	20433	
20	Cotter pin Saxpinne; Gespalter stift; Goupille fendue	2	21471	
21	Washer Bricka; Scheibe; Rondelle	2	20375	
22	Bracket Fäste; Halterung; Support	1	167058	
23	Gas suspension Gasfjäder; Gasfederung; Suspension à gaz	1	152616-001	
24	Bracket Fäste; Halterung; Support	1	175744	
25	Nut Mutter; Mutter; Ecrou	2	20433	
26	Washer Bricka; Scheibe; Rondelle	2	20375	
27	Screw Skruv; Schraube; Vis	2	29606	
28	Nut Mutter; Mutter; Ecrou	4	20081	
29	Washer Bricka; Scheibe; Rondelle	4	20404	
30	Damper Dämpare; Dämpfer; Attenteur	2	125956-099	
31	Nut Mutter; Mutter; Ecrou	2	20081	
32	Sleeve Hylsa; Hülse; Douille	2	167029	
33	Hook Hake; Haken; Crochet	2	174877	Front Främre; Vordere; Avant
34	Washer Bricka; Scheibe; Rondelle	2	20404	
35	Screw Skruv; Schraube; Vis	2	21935	
36	Screw Skruv; Schraube; Vis	4	29982	
37	Hinge Gångjärn; Charnier; Charnière	1	167039	
39	Cover plate Täckplåt; Deckblech; Protecteur en tôle	1	177683	
40	Nut Mutter; Mutter; Ecrou	2	20433	

© TOYOTA Industrial Equipment Europe SARL Ancenis, France

TOYOTA

Pos	Description	Pcs	Part No	Note
41	Screw Skruv; Schraube; Vis	2	29606	

© TOYOTA Industrial Equipment Europe SARL Ancenis, France

© TOYOTA Industrial Equipment Europe SARL Ancenis, France

0380-127

P0012379

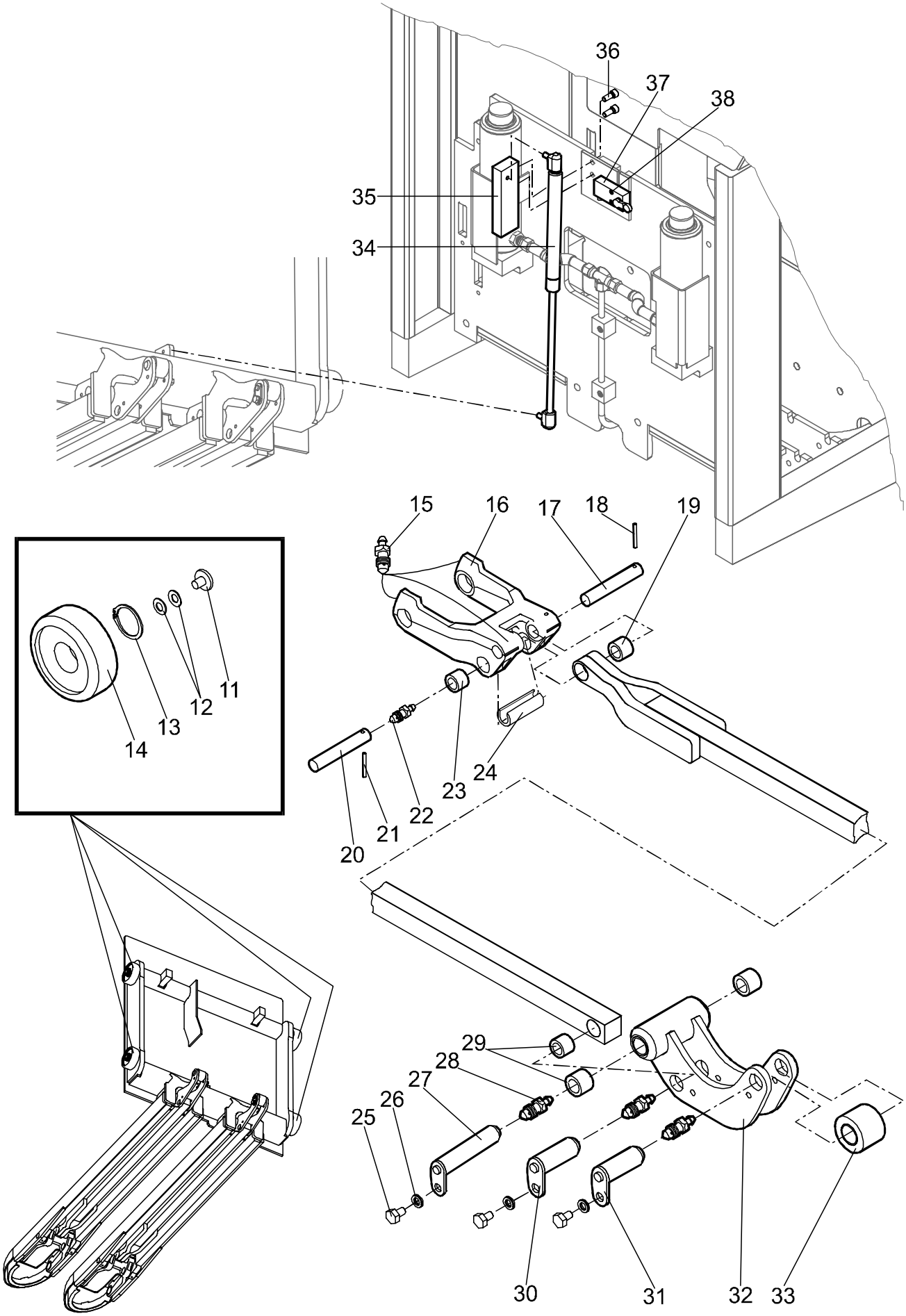

© TOYOTA Industrial Equipment Europe SARL Ancenis, France

0380-127 Fork frame (low lifters) [2001-04-02]

Gaffelstomme (låglyftare); Gabelchassis (Niederhubwagen); Châssis (transpalettes)

			680 7 PLL 24 410997 -	
Pos	Description	Pcs	Part No	Note
11	Guide Styrning; Steuerung; Guidage	4	143840	
12	Washer Bricka; Scheibe; Rondelle	8-16	22707	
13	Locking ring Spårring; Schliessring; Circlip	4	20008	
14	Roller(Complete) Rulle(Komplett); Rolle(Komplett); Roleau(Complet)	4	151849	
15	Greasing nipple Smörjnippel; Smiernippel; Graisseur	4	22410	
16	Wheel fork Hjulgaffel; Radgabel; Fourche de roue	2	157764	
17	Axle Axel; Achse; Axe	2	172944-104	
17	Axle Axel; Achse; Axe	2	176647	Cold stores Fryshus; Gefrieranlage; Chambre frigorifique
18	Locking pin Spännstift; Spannstift; Goupille	2	27921	
19	Bush Bussning; Bague; Bague	2	140168	
20	Axle Axel; Achse; Axe	2	172945-170	
20	Axle Axel; Achse; Axe	2	177480	Cold stores Fryshus; Gefrieranlage; Chambre frigorifique
21	Locking pin Spännstift; Spannstift; Goupille	2	22128	
22	Greasing nipple Smörjnippel; Smiernippel; Graisseur	8	22410	
23	Bush Bussning; Bague; Bague	2	140169	
24	Sleeve Hylsa; Hülse; Douille	2	142771	
25	Screw Skruv; Schraube; Vis	6	20031	
26	Washer Bricka; Scheibe; Rondelle	6	126723-003	
27	Axle Axel; Achse; Axe	2	172939-150	
27	Axle Axel; Achse; Axe	2	176601-150	Cold stores Fryshus; Gefrieranlage; Chambre frigorifique
28	Greasing nipple Smörjnippel; Smiernippel; Graisseur	6	22410	
29	Bush Bussning; Bague; Bague	6	140168	
30	Axle Axel; Achse; Axe	2	172939-052	
30	Axle Axel; Achse; Axe	2	177482	Cold stores Fryshus; Gefrieranlage; Chambre frigorifique
31	Axle Axel; Achse; Axe	2	172939-052	
31	Axle Axel; Achse; Axe	2	176601-058	Cold stores Fryshus; Gefrieranlage; Chambre frigorifique
32	Housing Kåpa; Haus; Chape	2	178817	Cold stores Fryshus; Gefrieranlage; Chambre frigorifique
32	Torsion tube Vridrör; Drehrohrl; Levier de tringlel	2	179818	

© TOYOTA Industrial Equipment Europe SARL Ancenis, France

Pos	Description	Pcs	Part No	Note
33	Roller Rulle; Rolle; Roleau	2	138423	
34	Gas suspension Gasfjäder; Gasfederung; Suspension à gaz	1	173139-100	
35	Bracket Fäste; Halterung; Support	1	172710	
36	Screw Skruv; Schraube; Vis	2	28522	
37	Switch Brytare; Schalter; Rupteur	1	176598	
38	Screw Skruv; Schraube; Vis	2	20243	

© TOYOTA Industrial Equipment Europe SARL Ancenis, France

© TOYOTA Industrial Equipment Europe SARL Ancenis, France

0390-089

P0012338

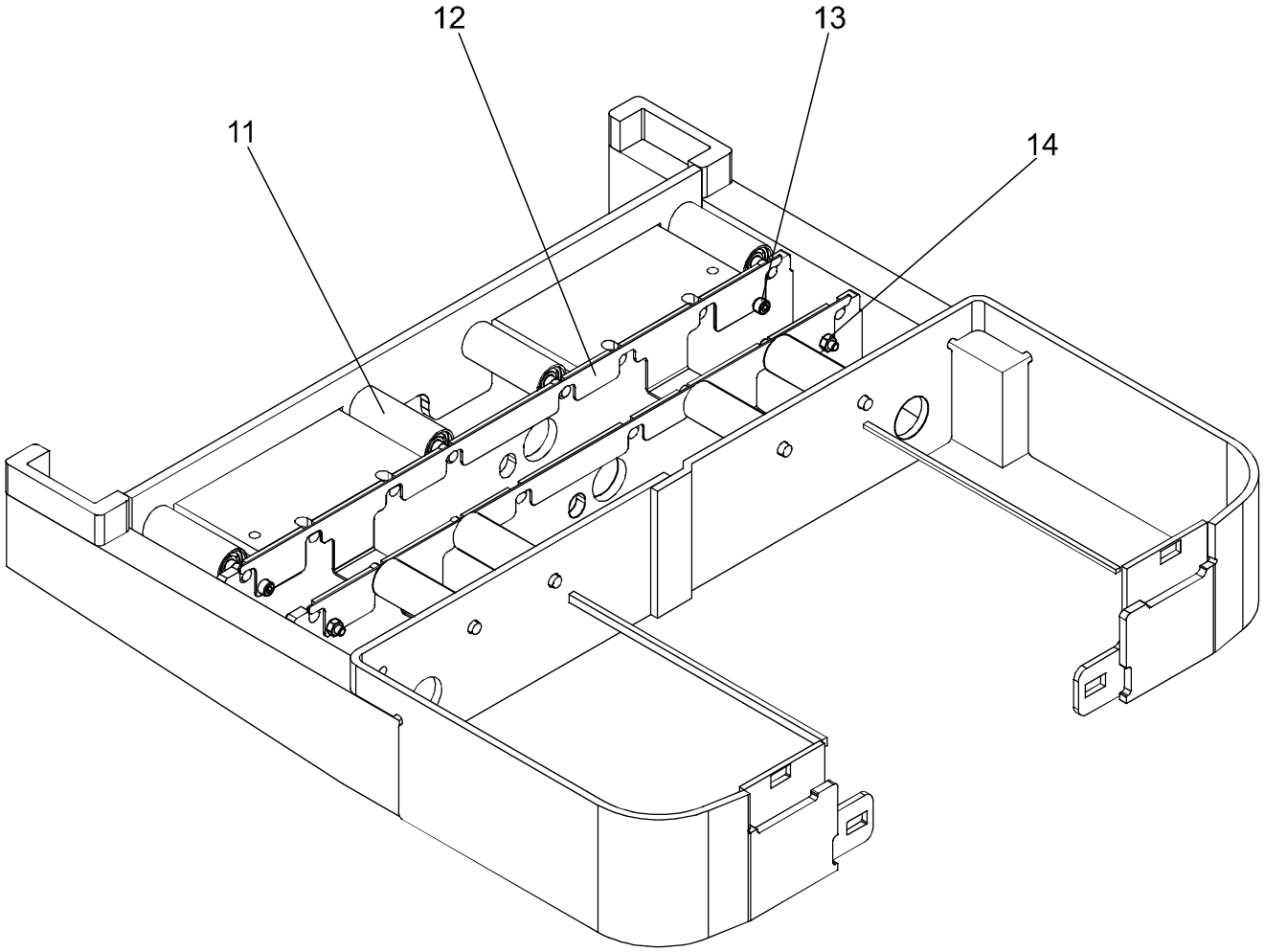

0390-089 Battery compartment parts

[2001-04-02]

Batteriutrymmesdelar; Batterieraumteile; Pièce de compartiment batterie

			680 7 PLL 24	410997 -
Pos	Description	Pcs	Part No	Note
11	Roller(Complete) Rulle(Komplett); Rolle(Komplett); Roleau(Complet)	8	163259-013	
12	Plate Plåt; Platte; Plaque	2	176472	
13	Screw Skruv; Schraube; Vis	4	20192	
14	Nut Mutter; Mutter; Ecrou	4	20016	

© TOYOTA Industrial Equipment Europe SARL Ancenis, France

0390-090

P0012339

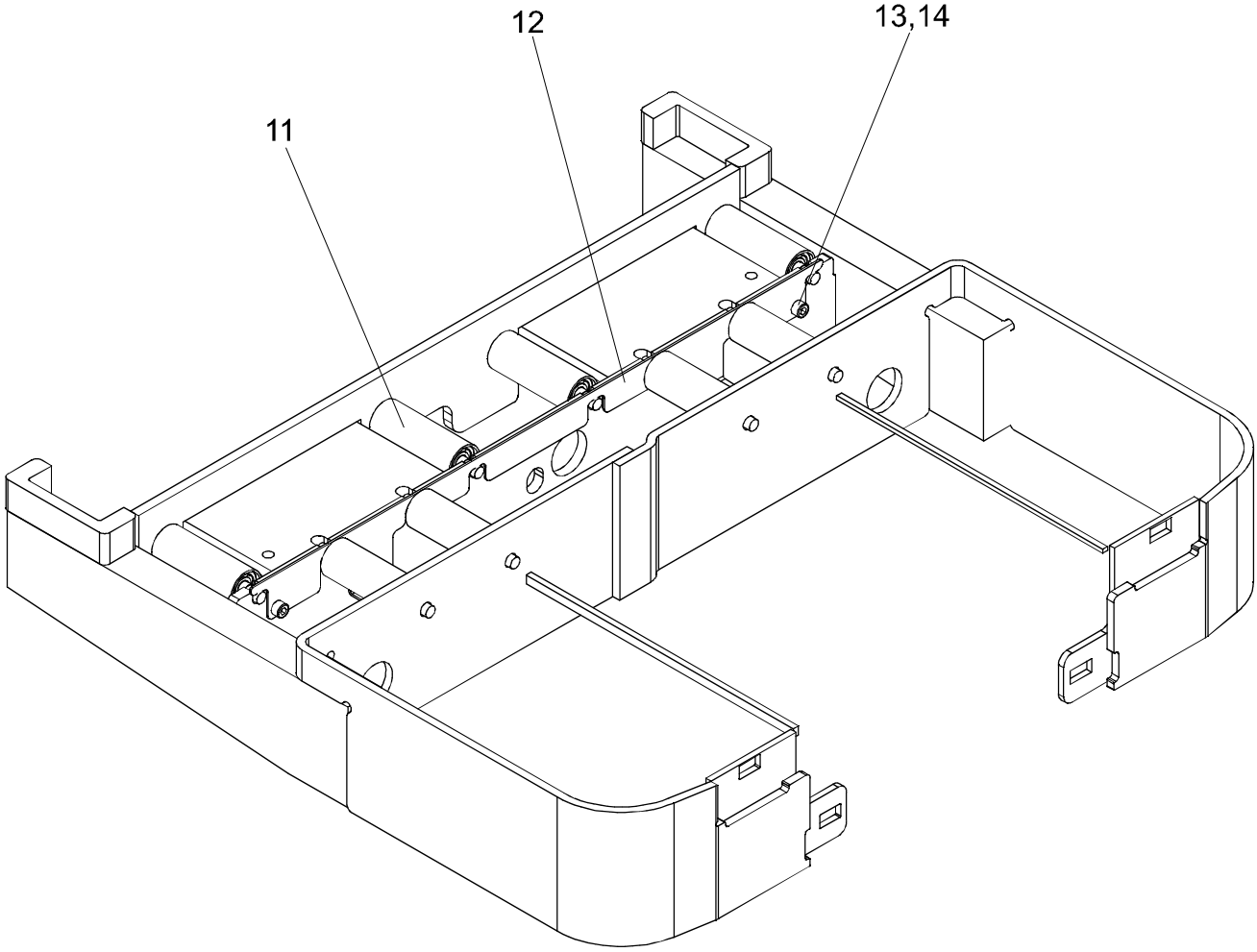

0390-090 Battery compartment parts

[2001-04-02]

Batteriutrymmesdelar; Batterieraumteile; Pièce de compartiment batterie

			680 7 PLL 24 410997 -	
Pos	Description	Pcs	Part No	Note
11	Roller(Complete) Rulle(Komplett); Rolle(Komplett); Roleau(Complet)	8	163259-013	
12	Plate Plåt; Platte; Plaque	1	176472	
13	Screw Skruv; Schraube; Vis	2	20192	
14	Nut Mutter; Mutter; Ecrou	2	20016	

© TOYOTA Industrial Equipment Europe SARL Ancenis, France

0390-093

P0012366

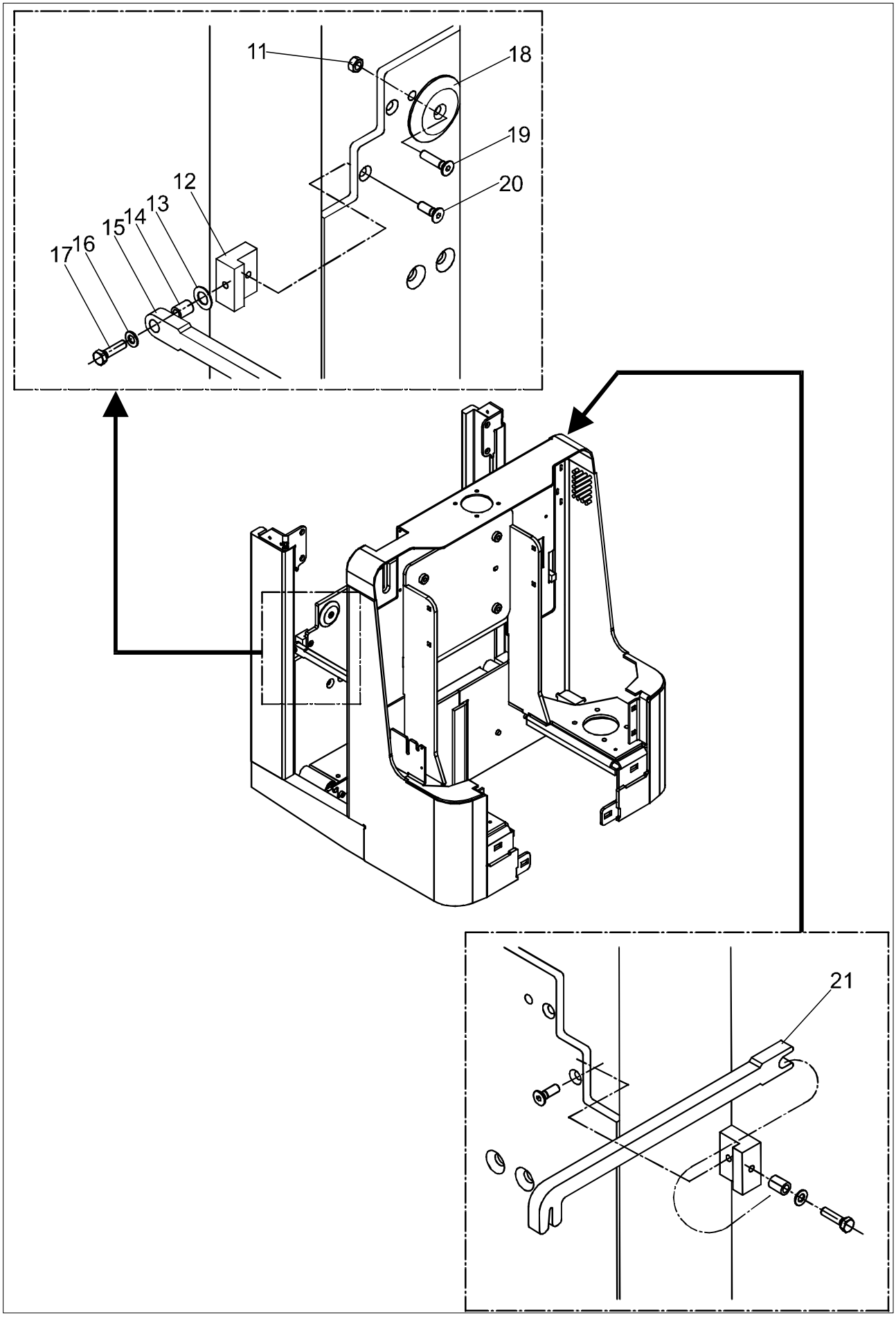

© TOYOTA Industrial Equipment Europe SARL Ancenis, France

0390-093 Battery compartment parts

[2001-04-02]

Batteriutrymmesdelar; Batterieraumteile; Pièce de compartiment batterie

			680 7 PLL 24	410997 -
Pos	Description	Pcs	Part No	Note
11	Nut Mutter; Mutter; Ecrou		20016	
12	Bracket Fäste; Halterung; Support	2	178546	
13	Washer Bricka; Scheibe; Rondelle	2	21394	
14	Bush Bussning; Bague; Bague	2	178547	
15	Catch Spärr; Sperre; Arret	1	178545-001	
16	Washer Bricka; Scheibe; Rondelle	2	20404	
17	Screw Skruv; Schraube; Vis	2	20351	
18	Distance piece Distans; Distanz; Distance		173411	
19	Screw Skruv; Schraube; Vis		20996	
20	Screw Skruv; Schraube; Vis	2	20074	
21	Catch Spärr; Sperre; Arret	1	178828	

© TOYOTA Industrial Equipment Europe SARL Ancenis, France

0390-094 **P0012418**

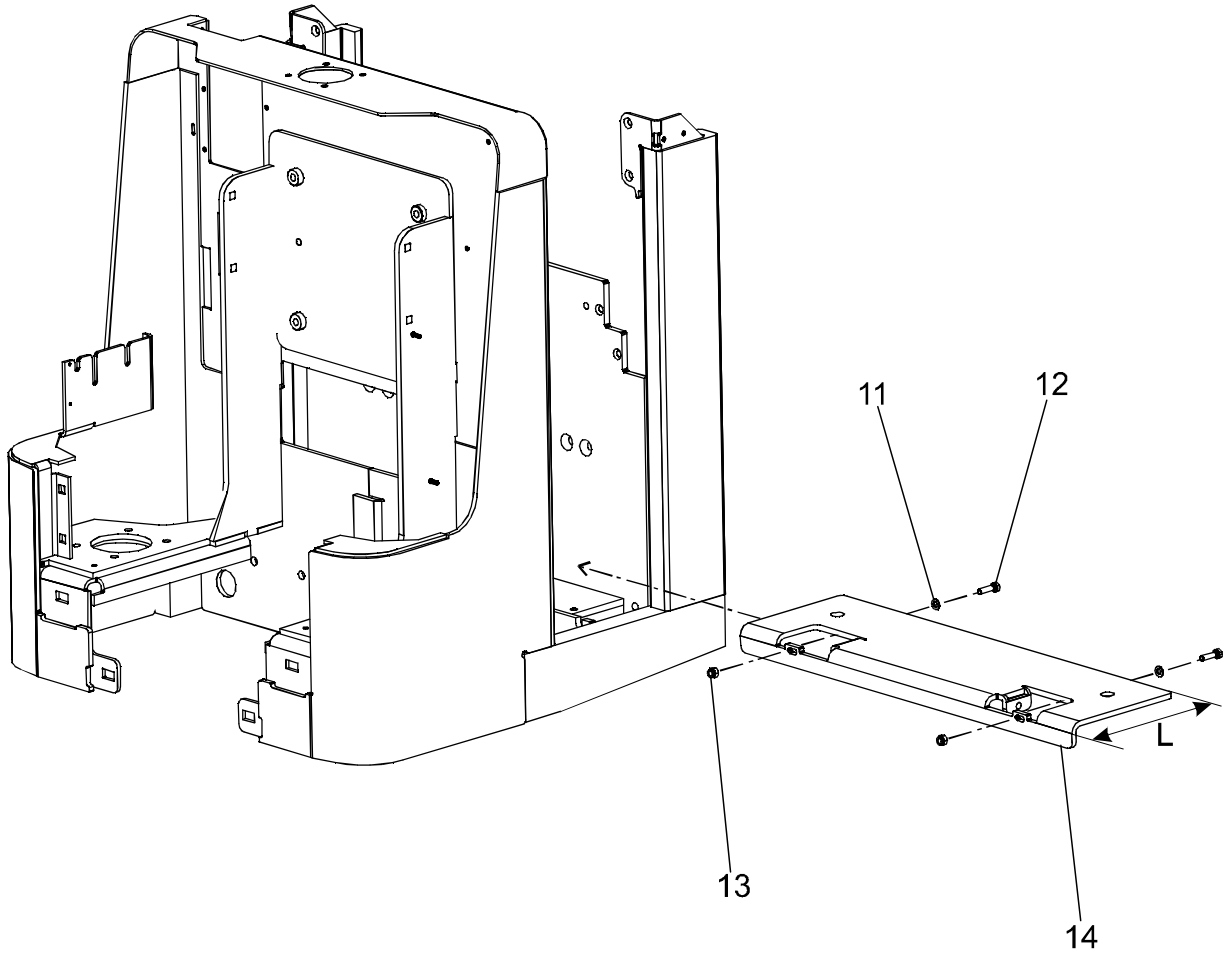

0390-094 Battery compartment parts

[2001-04-02]

Batteriutrymmesdelar; Batterieraumteile; Pièce de compartiment batterie

			680 7 PLL 24	410997 -
Pos	Description	Pcs	Part No	Note
11	Washer Bricka; Scheibe; Rondelle	2	20404	
12	Screw Skruv; Schraube; Vis	2	20460	
13	Nut Mutter; Mutter; Ecrou	2	20016	
14	Plate Plåt; Platte; Plaque	1	176439-001	L = 198
14	Plate Plåt; Platte; Plaque	1	176439-002	L = 284

© TOYOTA Industrial Equipment Europe SARL Ancenis, France

© TOYOTA Industrial Equipment Europe SARL Ancenis, France

0390-095

P0012433

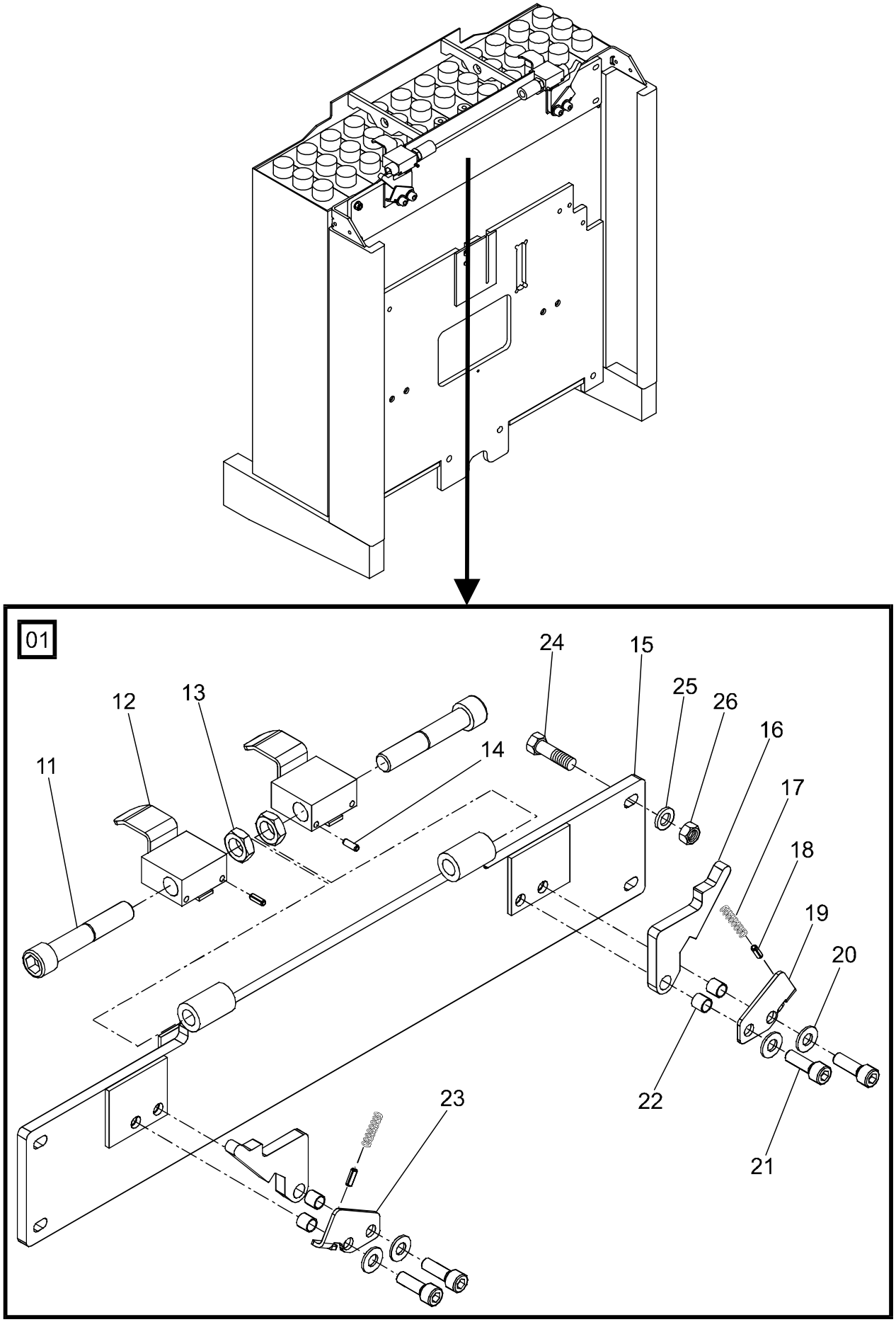

© TOYOTA Industrial Equipment Europe SARL Ancenis, France

0390-095 Battery compartment parts

[2001-04-02]

Batteriutrymmesdelar; Batterieraumteile; Pièce de compartiment batterie

			680 7 PLL 24	410997 -
Pos	Description	Pcs	Part No	Note
01	Battery holder(Complete) Batterihållare(Komplett); Batteriehalter(Komplett); Fixation de batterie(Complet)	1	177768	
11	Screw Skruv; Schraube; Vis	2	28257	
12	Stop lug Stoppklack; Anschlagsstück; Arréter	2	176470	
13	Nut Mutter; Mutter; Ecrou	2	20006	
14	Locking pin Spännstift; Spannstift; Goupille	2	21979	
15	Support Stöd; Stütze; Appui	1	176467	
16	Catch Spärr; Sperre; Arret	2	177764	
17	Spring Fjäder; Feder; Ressort	2	47071	
18	Locking pin Spännstift; Spannstift; Goupille	2	21979	
19	Support Hållare; Stossfänger; Absorber des chocs	1	177767	
20	Washer Bricka; Scheibe; Rondelle	4	20348	
21	Screw Skruv; Schraube; Vis	4	28344	
22	Distance piece Distans; Distanz; Distance	4	76947	
23	Support Hållare; Stossfänger; Absorber des chocs	1	177766	
24	Screw Skruv; Schraube; Vis	4	20358	
25	Washer Bricka; Scheibe; Rondelle	4	20404	
26	Nut Mutter; Mutter; Ecrou	4	20081	

© TOYOTA Industrial Equipment Europe SARL Ancenis, France

0390-096

P0012431

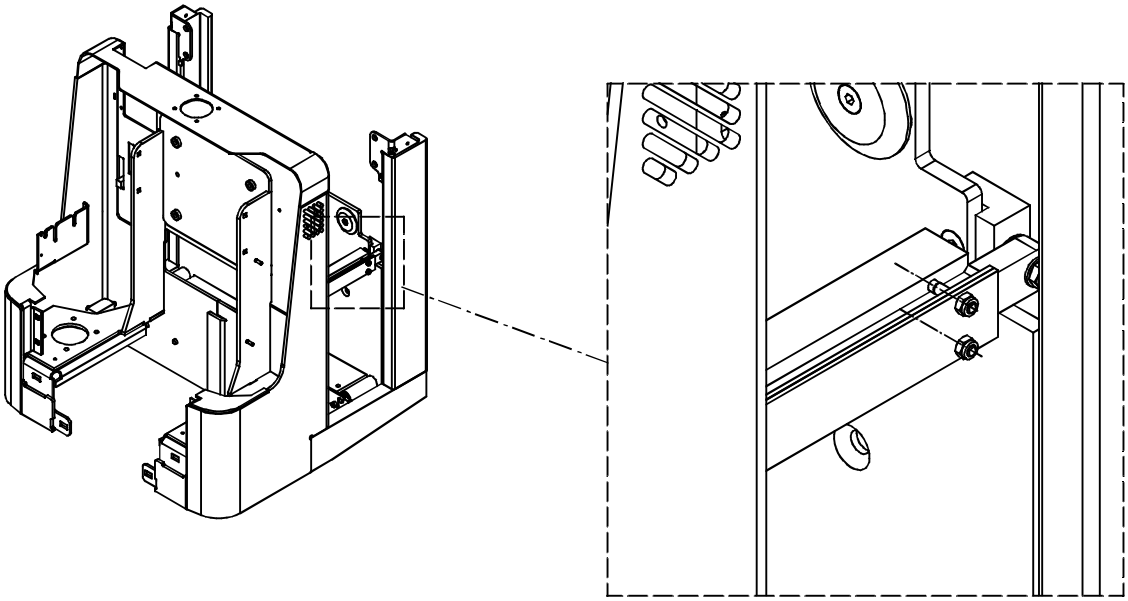

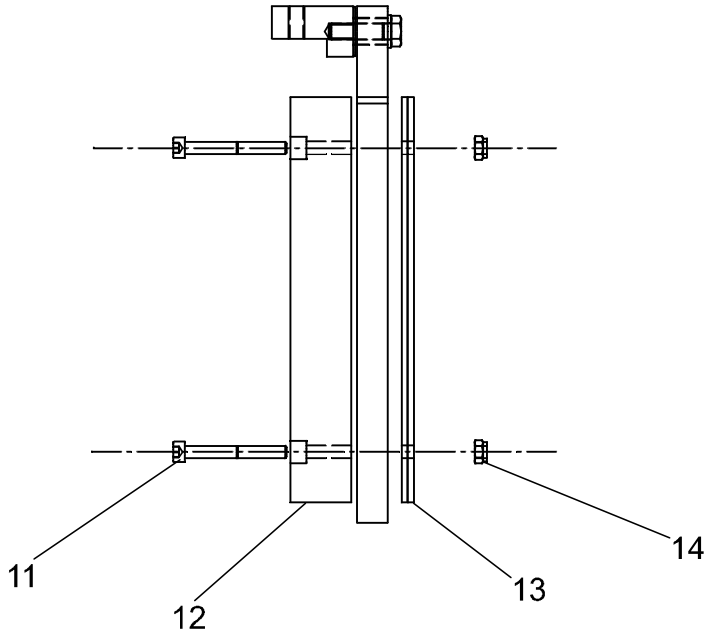

0390-096 Battery compartment parts

[2001-04-02]

Batteriutrymmesdelar; Batterieraumteile; Pièce de compartiment batterie

			680 7 PLL 24	410997 -
Pos	Description	Pcs	Part No	Note
11	Screw Skruv; Schraube; Vis	4	22288	
12	Distance piece Distans; Distanz; Distance	1	176073	
13	Distance piece Distans; Distanz; Distance	2	176071	
14	Nut Mutter; Mutter; Ecrou	4	20433	

© TOYOTA Industrial Equipment Europe SARL Ancenis, France

© TOYOTA Industrial Equipment Europe SARL Ancenis, France

0400-020

P0011248

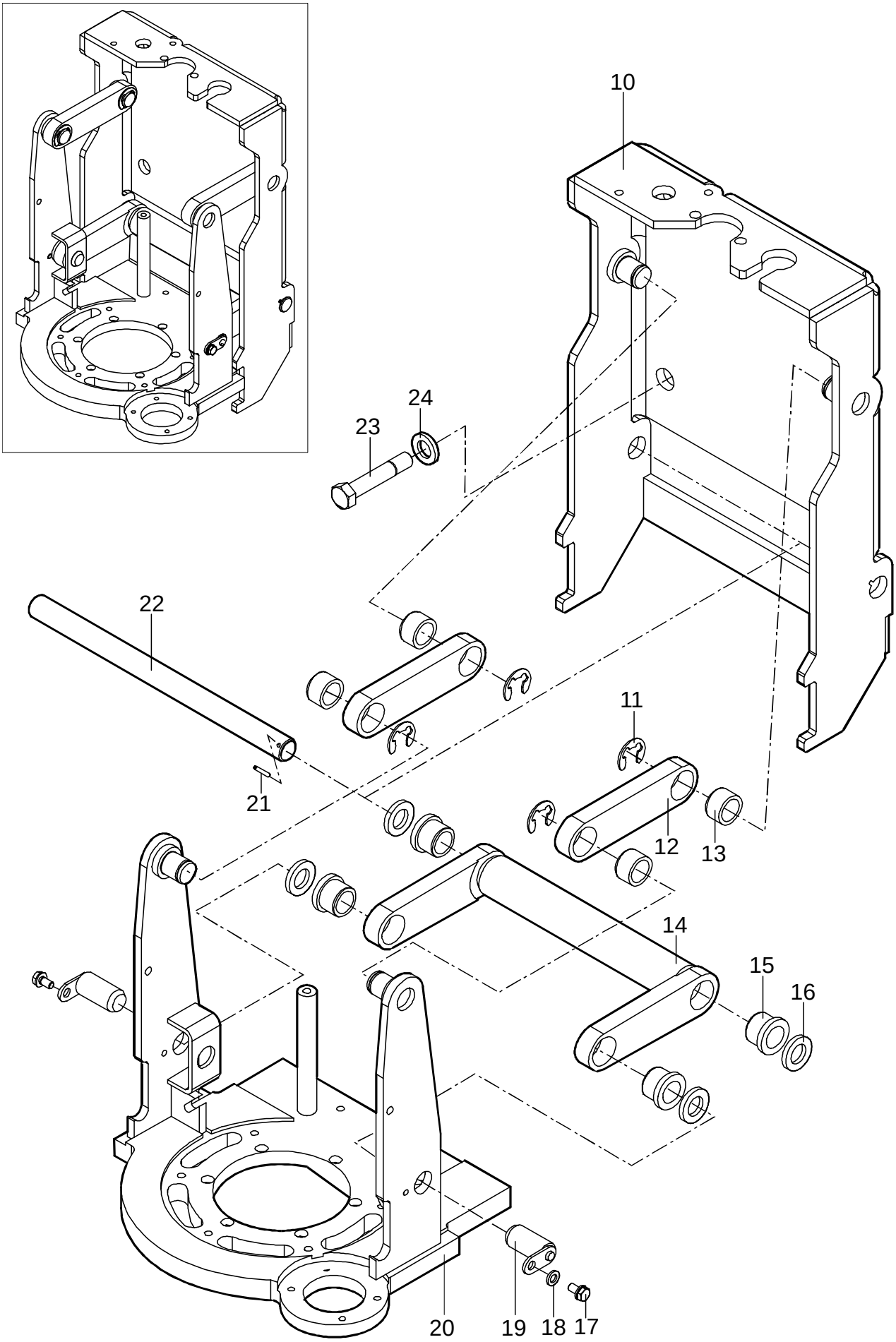

© TOYOTA Industrial Equipment Europe SARL Ancenis, France

0400-020 Frame/chassis components

[2001-04-02]

Ram-monterade detaljer; Chassisanbauteile; Composants du châssis

Gearbox fixing points; Växellådsupphängning/-fästen; Grtriebebefestigung; Points de fixation boîte de vitesses	680 7 PLL 24 410997 -

Pos	Description	Pcs	Part No	Note
10	Bracket Fäste; Halterung; Support	1	169305	
11	Locking ring Spårring; Schliessring; Circlip	4	24000	
12	Link Länk; Gelenk; Bras	2	169450	
13	Bush Bussning; Bague; Bague	4	164091	
14	Torsion tube Vridrör; Drehrohrl; Levier de tringlel	1	164970	
15	Bush Bussning; Bague; Bague	4	164090	
16	Washer(0,5 mm) Bricka; Scheibe; Rondelle		163013-001	Pcs as needed Antal efter behov; Anzhahl nach bedarf; Nombre éligible
16	Washer(1 mm) Bricka; Scheibe; Rondelle		163013-002	Pcs as needed Antal efter behov; Anzhahl nach bedarf; Nombre éligible
17	Screw Skruv; Schraube; Vis	2	20078	
18	Washer Bricka; Scheibe; Rondelle	2	20404	
19	Axle Axel; Achse; Axe	2	174423	
20	Motor bracket Motorfäste; Motorhalterung; Moteur de Support	1	169304	
21	Locking pin Spännstift; Spannstift; Goupille	1	20524	
22	Axle for torsion tube Axel för vridrör; Achse für Drehrohr; Axe du levier de tringle	1	165348	
23	Screw Skruv; Schraube; Vis	4	21816	
24	Washer Bricka; Scheibe; Rondelle	4	175336	

© TOYOTA Industrial Equipment Europe SARL Ancenis, France

0560-055

P0011654

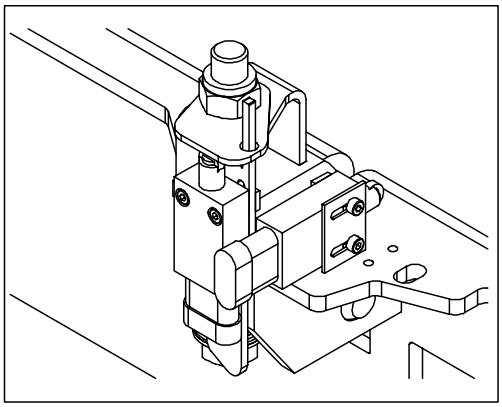

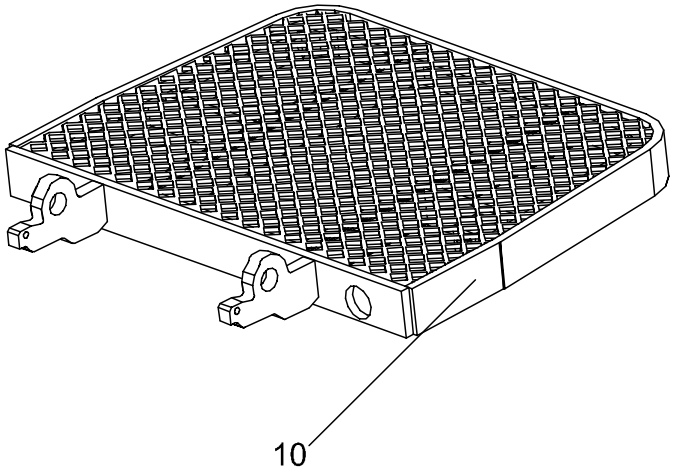

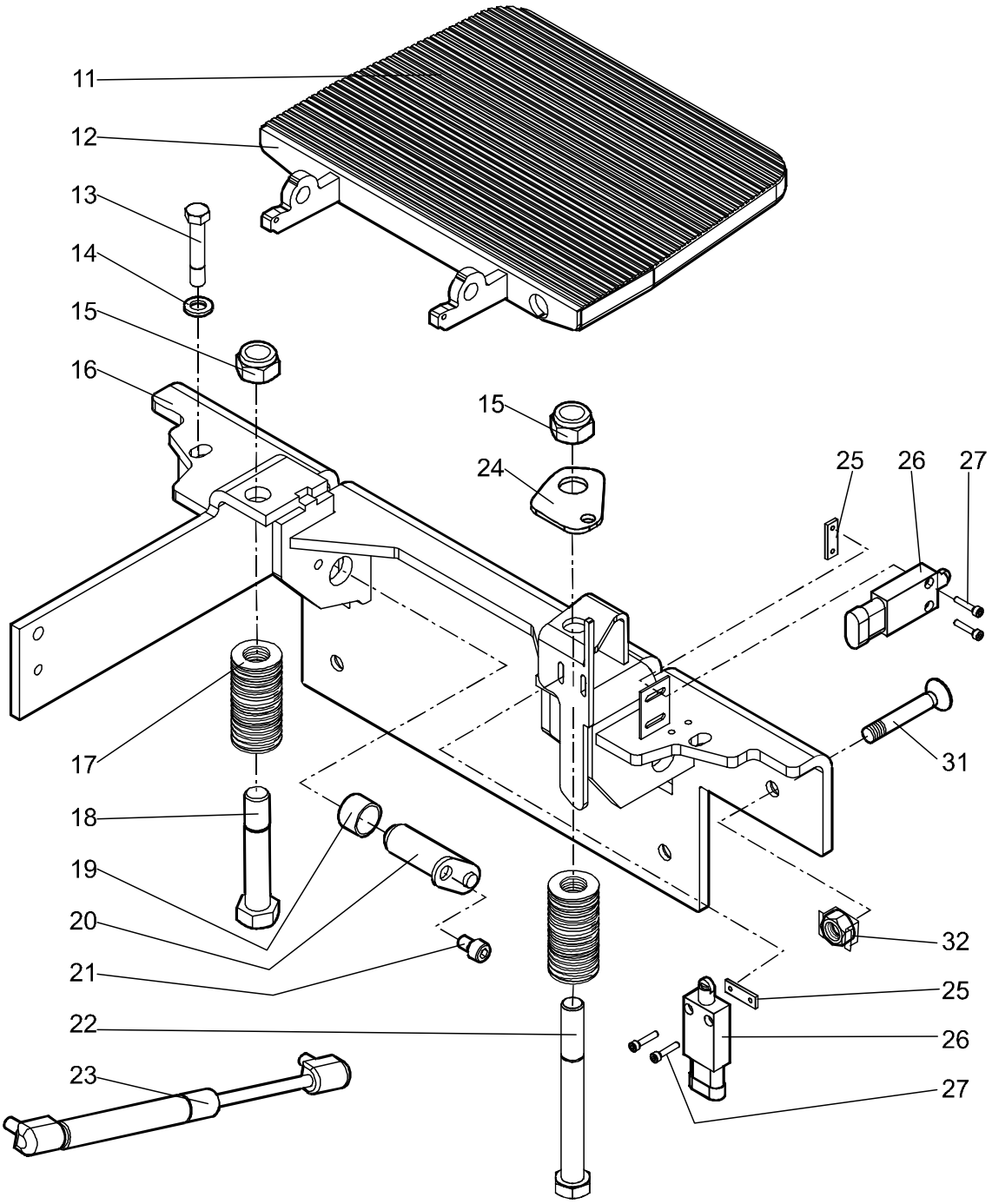

© TOYOTA Industrial Equipment Europe SARL Ancenis, France

0560-055 Platform incl. fixing points

[2001-04-02]

Åkplattform med infästning; Fahrerplattform mit Befestigung; Plateforme et fixations

			680 7 PLL 24	410997 -
Pos	Description	Pcs	Part No	Note
10	Platform Plattform; Plattform; Plate-forme	1	176317	Cold stores Fryshus; Gefrieranlage; Chambre frigorifique
11	Carpet Matta; Teppisch; Tapis	1	173696	
12	Platform Plattform; Plattform; Plate-forme	1	176536	
13	Screw Skruv; Schraube; Vis	2	21935	
14	Washer Bricka; Scheibe; Rondelle	2	20404	
15	Nut Mutter; Mutter; Ecrou	3	21123	
16	Bracket Fäste; Halterung; Support	1	176733-031	
17	Cup spring Tallriksfjäder; Tellerfeder; Ressort de disque	58	23986	
18	Screw Skruv; Schraube; Vis	1	20542	
19	Bush Bussning; Bague; Bague	2	20842	
20	Axle Axel; Achse; Axe	2	176636-060	
21	Screw Skruv; Schraube; Vis	2	21935	
22	Screw Skruv; Schraube; Vis	1	24619	
23	Gas suspension(400 Newton) Gasfjäder(400 N); Gasfederung(400 N); Suspension à gaz(400 N)	1	122314-084	
23	Gas suspension(800 Newton) Gasfjäder; Gasfederung; Suspension à gaz	1	122314-088	
24	Plate Plåt; Platte; Plaque	1	176706	
25	Nut plate Mutterplåt; Mutterplatte; Plaque de ecrou	2	176006	
26	Switch Brytare; Schalter; Rupteur	2	169089	
27	Screw Skruv; Schraube; Vis	4	177005	
27	Screw Skruv; Schraube; Vis	4	21568	Cold stores Fryshus; Gefrieranlage; Chambre frigorifique
31	Screw Skruv; Schraube; Vis	4	162851	
32	Nut Mutter; Mutter; Ecrou	4	29590	

© TOYOTA Industrial Equipment Europe SARL Ancenis, France

0840-038

P0012381

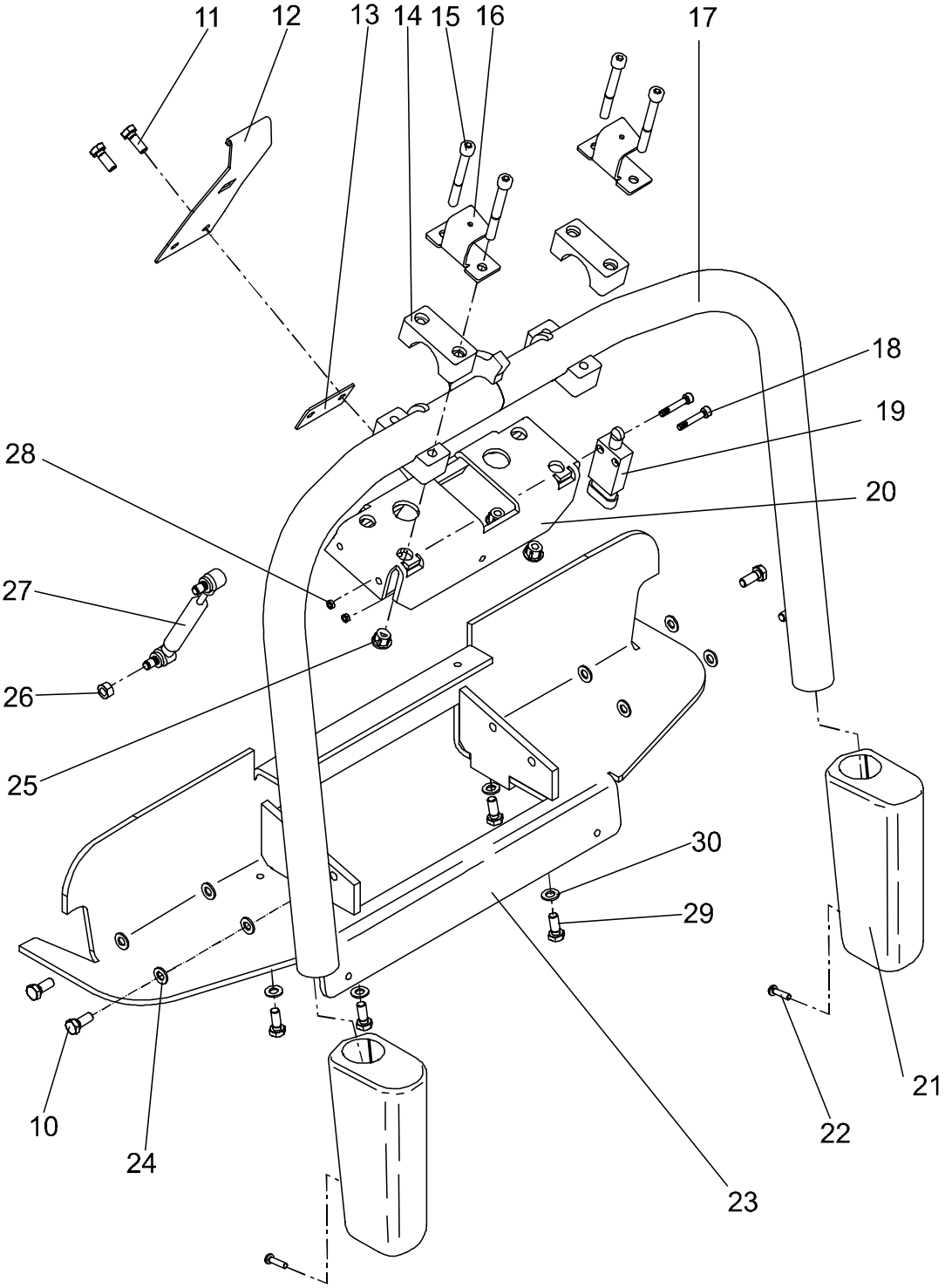

© TOYOTA Industrial Equipment Europe SARL Ancenis, France

0840-038 Driver protection

[2001-04-02]

Förarskydd; Fahrerschutz; Protection de cariste

			680 7 PLL 24	410997 -
Pos	Description	Pcs	Part No	Note
10	Screw Skruv; Schraube; Vis	4	21935	
11	Screw Skruv; Schraube; Vis	2	29768	
12	Stopper Stoppanordning; Abstellvorrichtung; Dispositif d´arrêt	1	175723	
13	Plate Plåt; Platte; Plaque	1	172952	
14	Pedastal Lagerbock; Lagerbock; Palier à chapeau	4	169843	
15	Screw Skruv; Schraube; Vis	4	24352	
16	Bracket Fäste; Halterung; Support	2	173265	
17	Arm Arm; Arm; Bras	1	178589	
18	Screw Skruv; Schraube; Vis	2	21568	
19	Switch Brytare; Schalter; Rupteur	1	169089	
20	Plinth Sockel; Sockel; Socle	1	178570	
21	Protection Skydd; Schutz; Protéege	2	172631	
22	Screw Skruv; Schraube; Vis	2	20938	
23	Support Stöd; Stütze; Appui	1	172630	
24	Washer Bricka; Scheibe; Rondelle	8	126723-003	
25	Nut Mutter; Mutter; Ecrou	4	173140	
26	Nut Mutter; Mutter; Ecrou	1	20016	
27	Gas suspension Gasfjäder; Gasfederung; Suspension à gaz	1	178776-001	
28	Nut Mutter; Mutter; Ecrou	2	25699	
29	Screw Skruv; Schraube; Vis	4	21935	
30	Washer Bricka; Scheibe; Rondelle	8	126723-003	

© TOYOTA Industrial Equipment Europe SARL Ancenis, France

0840-057

P0013026

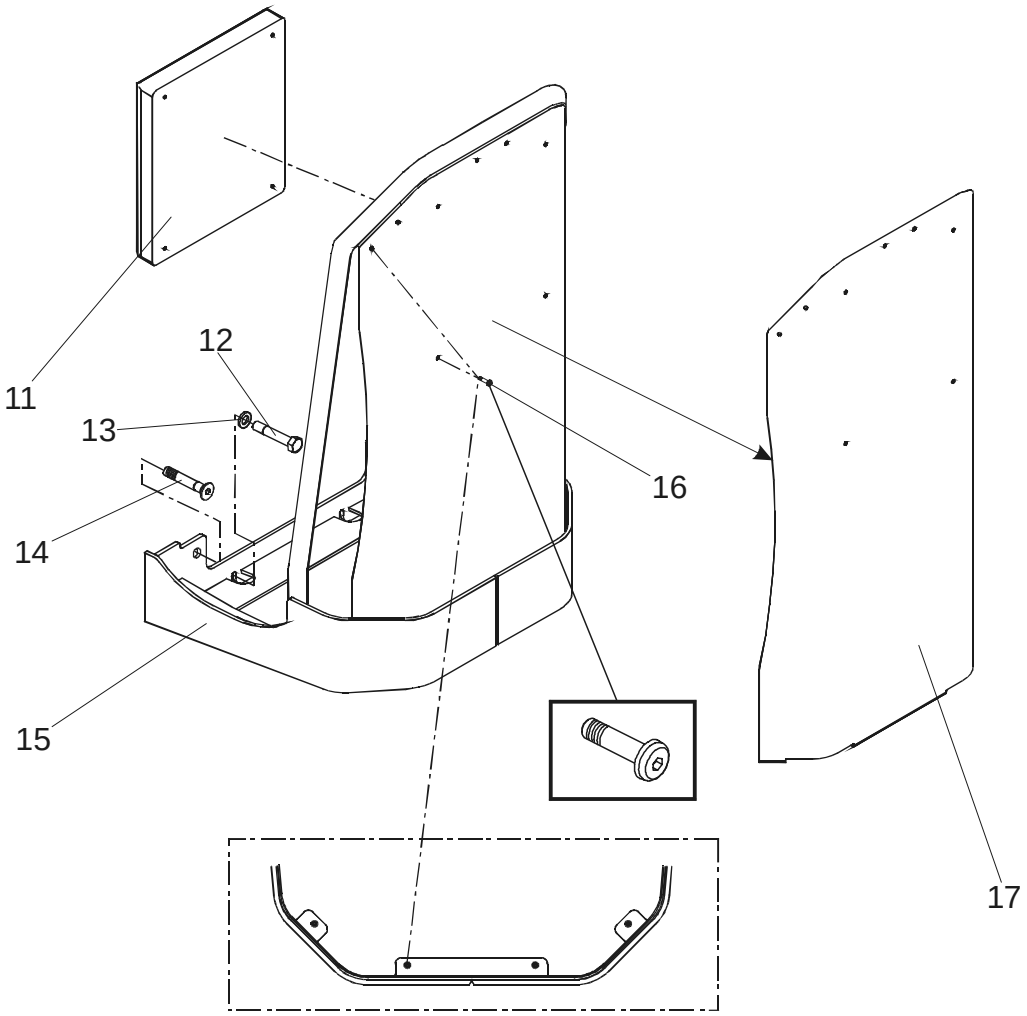

0840-057 Driver protection

[2001-04-02]

Förarskydd; Fahrerschutz; Protection de cariste

			680 7 PLL 24 410997 -	
Pos	Description	Pcs	Part No	Note
11	Cushion Dyna; Kissen; Coussin	1	178148	
12	Screw Skruv; Schraube; Vis	2	26486	
13	Washer Bricka; Scheibe; Rondelle	2	20348	
14	Screw Skruv; Schraube; Vis	2	29514	
15	Frame Stomme; Gerippe; Ossature	1	177466	
16	Screw Skruv; Schraube; Vis	14	171823	
17	Plate Plåt; Platte; Plaque	1	178162-031	

© TOYOTA Industrial Equipment Europe SARL Ancenis, France

© TOYOTA Industrial Equipment Europe SARL Ancenis, France

0850-153

P0013040

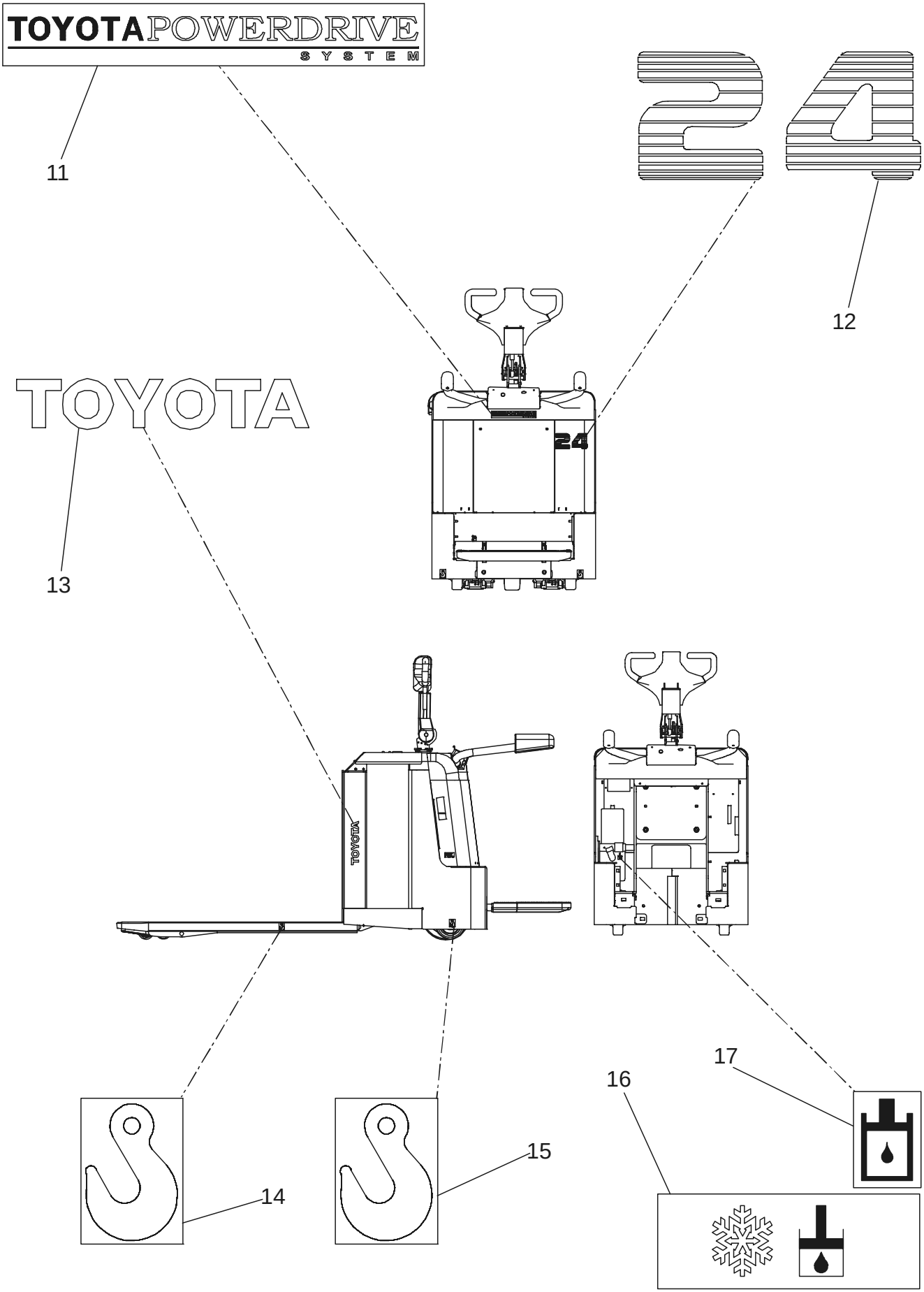

© TOYOTA Industrial Equipment Europe SARL Ancenis, France

0850-153 Signs, warnings, decals

[2001-04-02]

Skyltar, varningar, dekaler; Schilder, Warnzeichen, Aufkleber; Vignettes, avertissements, autocollants

			680 7 PLL 24	410997 -
Pos	Description	Pcs	Part No	Note
11	Sign Skylt; Schild; Vignette	1	177365	
12	Sign Skylt; Schild; Vignette	1	177366	
13	Sign Skylt; Schild; Vignette	2	168388	
14	Sign Skylt; Schild; Vignette	2	168719	
15	Sign Skylt; Schild; Vignette	2	152027	
16	Sign(Cold stores) Skylt(Fryshus); Schild(Gefrieranlage); Vignette(Chambre frigorifique)	1	147488	
17	Sign Skylt; Schild; Vignette	1	72082	

© TOYOTA Industrial Equipment Europe SARL Ancenis, France

1710-018

P0000120

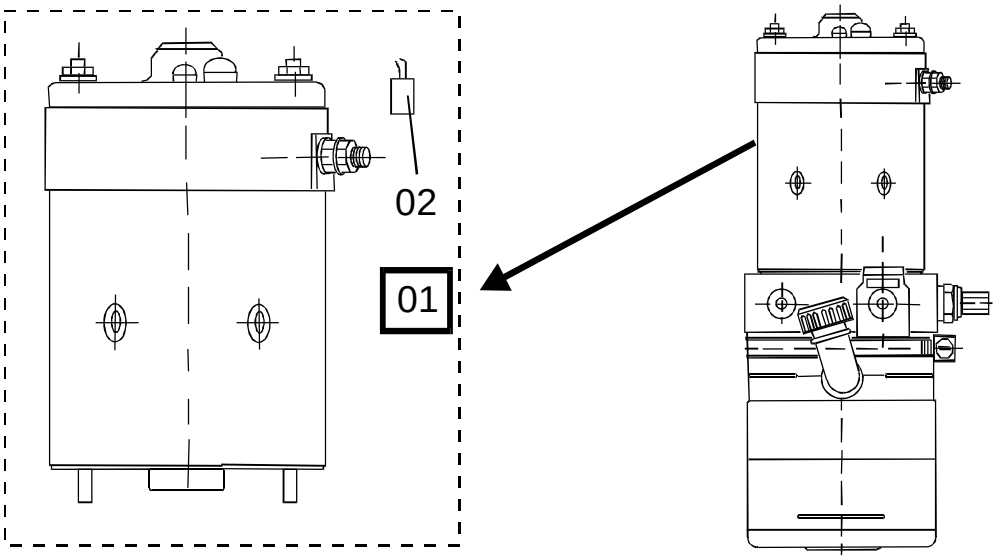

1710-018 Electric pump motor

[2001-04-02]

Elektrisk pumpmotor; Elektro-Pumpenmotor; Moteur de pompe électrique

			680 7 PLL 24	410997 -
Pos	Description	Pcs	Part No	Note
01	Motor Motor; Motor; Moteur	1	143375	
02	Carbon brush set Kolsats; Kohlenbürstesats; Jeux de charbon	1	143376	

© TOYOTA Industrial Equipment Europe SARL Ancenis, France

1730-009

P0012554

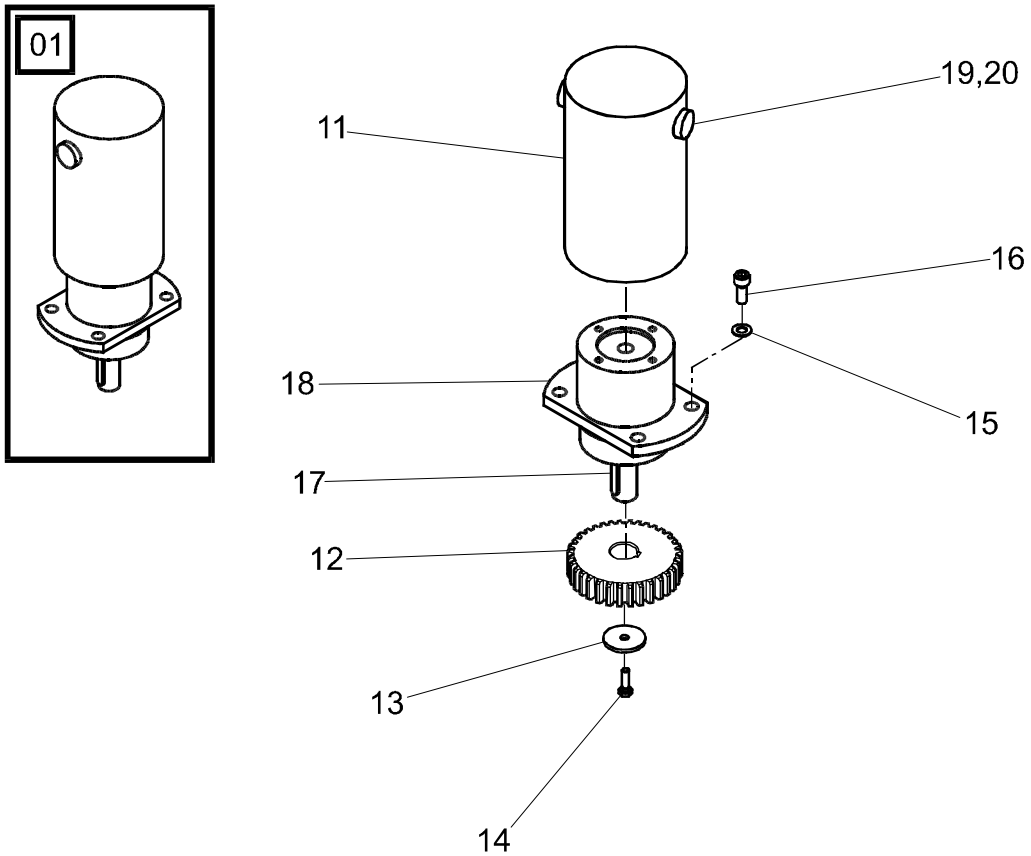

1730-009 Electric steering motor

[2001-04-02]

Elektrisk styrmotor; Elektro-Lenkmotor; Moteur de direction électrique

			680 7 PLL 24	410997 -
Pos	Description	Pcs	Part No	Note
01	Steering motor(Complete) Styrmotor(Komplett); Steuerrungsmotor(Komplett); Module moteur de direction(Complet)	1	154353	
11	Motor Motor; Motor; Moteur	1	139266	
12	Gear wheel Kugghjul; Zahnrad; Roue dentée	1	164414	
13	Washer Bricka; Scheibe; Rondelle	1	29743	
14	Screw Skruv; Schraube; Vis	1	25191	
15	Washer Bricka; Scheibe; Rondelle	4	20404	
16	Screw Skruv; Schraube; Vis	4	21141	
17	Key Kil; Keil; Clavette	1	20909	
18	Gear Växel; Getriebe; Engrenage	1	154354	
19	Plug Plugg; Pfropf; Bouchon	2	164916	
20	Carbon brush Kolborste; Kohlebürste; Charbon	2	29565	

© TOYOTA Industrial Equipment Europe SARL Ancenis, France

1760-014

P0012749

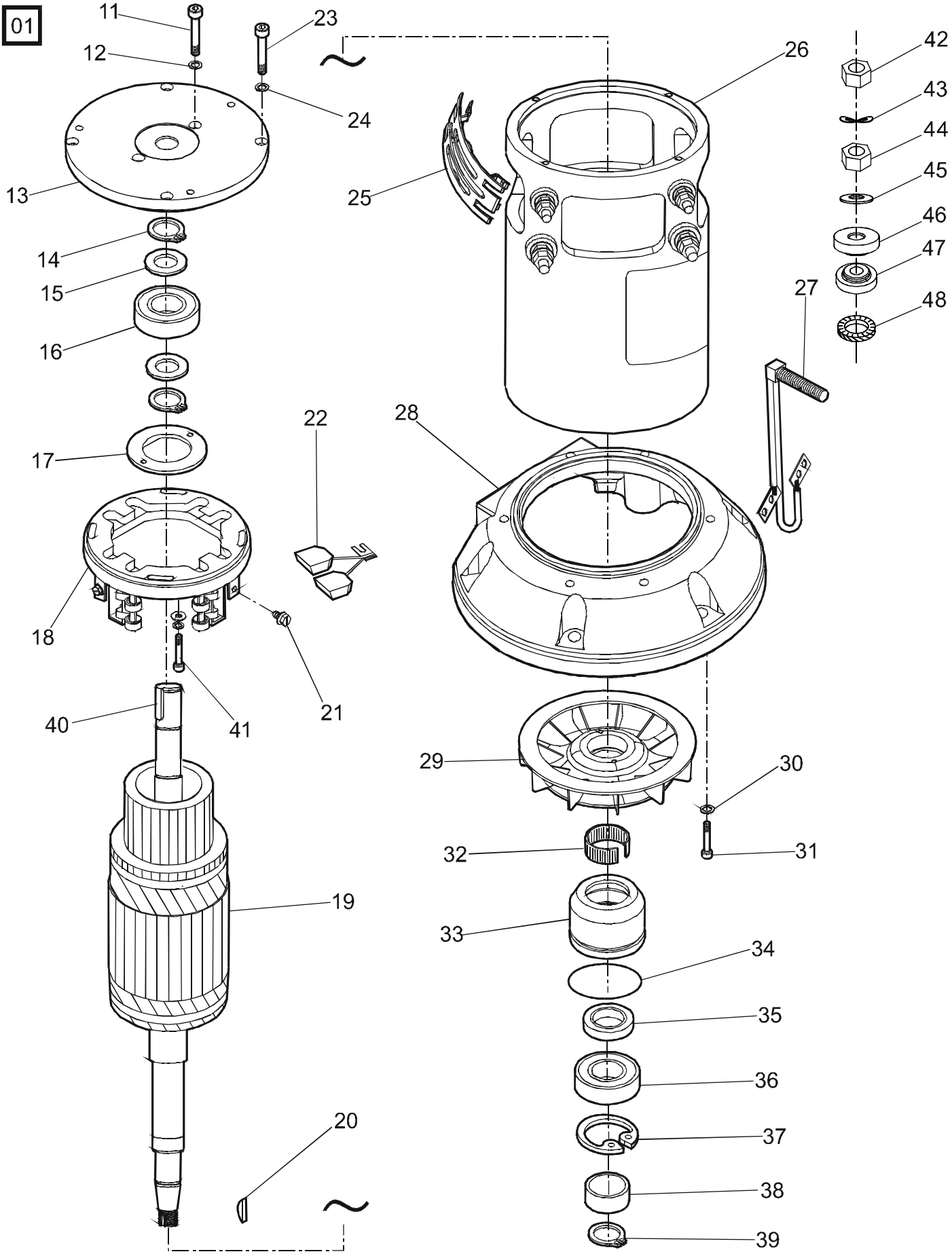

© TOYOTA Industrial Equipment Europe SARL Ancenis, France

1760-014 Electric drive motor

[2001-04-02]

Elektrisk åkmotor; Elektro-Fahrmotor; Moteur de traction électrique

			680 7 PLL 24	410997 -
Pos	Description	Pcs	Part No	Note
01	Motor(Complete) Motor(Komplett); Motor(Komplett); Moteur(Complet)	1	176102	
11	Screw Skruv; Schraube; Vis	2	20224	
12	Washer Bricka; Scheibe; Rondelle	2	179408	
13	End shield Lagersköld; Lagerschild; Bouclier	1	176152	
14	Locking ring Spårring; Schliessring; Circlip	2	20041	
15	Washer Bricka; Scheibe; Rondelle	2	29550	
16	Ball bearing Kullager; Kugellager; Roulement a billes	1	28886	
17	Cap Lock; Deckel; Couvercle	1	175301	
18	Carbon brush holder Kolhållare; Kohlebürstenhalter; Support de charbon	1	174958	
19	Rotor Rotor; Rotor; Rotor	1	174959	
20	Key Kil; Keil; Clavette	1	20150	
21	Screw Skruv; Schraube; Vis	4	175320	
22	Carbon brush Kolborste; Kohlebürste; Charbon	4	174970	
23	Screw Skruv; Schraube; Vis	4	26652	
24	Washer Bricka; Scheibe; Rondelle	4	21307	
25	Protection Skydd; Schutz; Protéege	4	175300	
26	Stator Stator; Ständer; Stator	1	176151	
27	Cable Kabel; Kabel; Câble	2	175299	
28	End shield Lagersköld; Lagerschild; Bouclier	1	174960	
29	Fan Fläkt; Kühlgebläse; Ventilateur	1	145689	
30	Washer Bricka; Scheibe; Rondelle	6	21307	
31	Screw Skruv; Schraube; Vis	6	20219	
32	Expanding sleev Spännbussning; Dehungshülse; Douille expansion	1	145690	
33	Hub Nav; Nabe; Moyeu	1	167541	
34	O-ring O-ring; O-ring; Joint torique	1	20279	
35	Sealing Tätning; Dichtung; Joint	1	28884	
36	Ball bearing Kullager; Kugellager; Roulement a billes	1	26102	
37	Locking ring Spårring; Schliessring; Circlip	1	20923	
38	Distance piece Distans; Distanz; Distance	1	175303	
39	Locking ring Spårring; Schliessring; Circlip	1	20019	
40	Key Kil; Keil; Clavette	1	179410	

© TOYOTA Industrial Equipment Europe SARL Ancenis, France

Pos	Description	Pcs	Part No	Note
41	Washer Bricka; Scheibe; Rondelle	4	20236	
41	Screw Skruv; Schraube; Vis	4	21272	
41	Washer Bricka; Scheibe; Rondelle	4	21307	
42	Nut Mutter; Mutter; Ecrou	2	20081	
43	Washer Bricka; Scheibe; Rondelle	2	21275	
44	Nut Mutter; Mutter; Ecrou	2	20081	
45	Washer Bricka; Scheibe; Rondelle	2	179409	
46	Bush Bussning; Bague; Bague	2	179349	
47	Bush Bussning; Bague; Bague	2	179349	
48	Washer Bricka; Scheibe; Rondelle	2	179407	

© TOYOTA Industrial Equipment Europe SARL Ancenis, France

© TOYOTA Industrial Equipment Europe SARL Ancenis, France

2550-031

P0012335

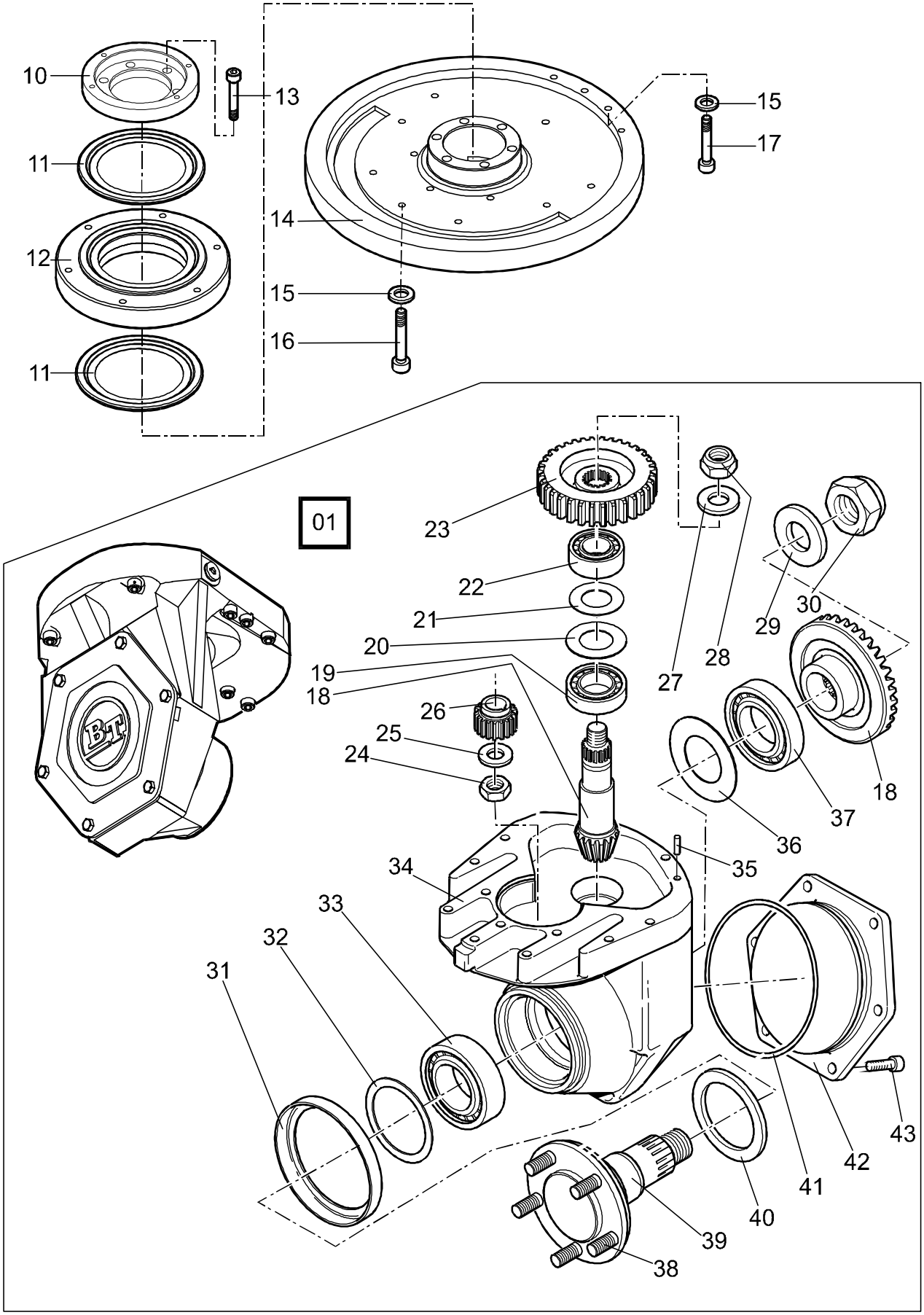

© TOYOTA Industrial Equipment Europe SARL Ancenis, France

2550-031 Mechanical drive gear unit

[2001-04-02]

Drivaggregat/-växel; Antriebsaggregat/-getriebe; Groupe de traction, réducteur

			680 7 PLL 24	410997 -
Pos	Description	Pcs	Part No	Note
01	Driving gear compl. Drivväxel kompl.; Antriebssatz kompl.; Groupe de entrainement compl.	1	170542	
10	Flange Fläns; Flansch; Bride	1	169604	
11	Sealing ring Tätningsring; Dichtungsring; Bague d´étanchéité	2	27210	
12	Steering bearing Styrlager; Steuerlager; Roulement de commande	1	158312	
13	Screw Skruv; Schraube; Vis	6	20276	
14	Cap(Gear ring) Lock(Kuggring); Deckel(Zahnkranz); Couvercle(Couronne dentée)	1	157838	
15	Washer Bricka; Scheibe; Rondelle	8	20404	
16	Screw Skruv; Schraube; Vis	8	20683	
17	Screw Skruv; Schraube; Vis	2	28343	
18	Spare part kit : Bevel gear Reservdelssats : Koniskt kugghjul; Satz : Kegelrad; Jeux : Roue conique à denture droite	1	142932	
19	Bearing Lager; Lager; Roulement	1	29569	
20	Shim(0,05 mm) Shims; Schim; Cale		140102-001	Pcs as needed Antal efter behov; Anzhahl nach bedarf; Nombre éligible
20	Shim(0,1mm) Shims; Schim; Cale		140102-002	Pcs as needed Antal efter behov; Anzhahl nach bedarf; Nombre éligible
20	Shim(0,2 mm) Shims; Schim; Cale		140102-003	Pcs as needed Antal efter behov; Anzhahl nach bedarf; Nombre éligible
20	Shim(0,3 mm) Shims; Schim; Cale		140102-004	Pcs as needed Antal efter behov; Anzhahl nach bedarf; Nombre éligible
20	Shim(0,5 mm) Shims; Schim; Cale		140102-005	Pcs as needed Antal efter behov; Anzhahl nach bedarf; Nombre éligible
21	Shim(0,05 mm) Shims; Schim; Cale		140100-001	Pcs as needed Antal efter behov; Anzhahl nach bedarf; Nombre éligible
21	Shim(0,1mm) Shims; Schim; Cale		140100-002	Pcs as needed Antal efter behov; Anzhahl nach bedarf; Nombre éligible
21	Shim(0,2 mm) Shims; Schim; Cale		140100-003	Pcs as needed Antal efter behov; Anzhahl nach bedarf; Nombre éligible
21	Shim(0,3 mm) Shims; Schim; Cale		140100-004	Pcs as needed Antal efter behov; Anzhahl nach bedarf; Nombre éligible
21	Shim(0,5 mm) Shims; Schim; Cale		140100-005	Pcs as needed Antal efter behov; Anzhahl nach bedarf; Nombre éligible
22	Roller bearing Rullager; Rollenlager; Palier à roleaux	1	27208	
23	Gear wheel Kugghjul; Zahnrad; Roue dentée	1	149012	
24	Nut Mutter; Mutter; Ecrou	1	20877	
25	Washer Bricka; Scheibe; Rondelle	1	20878	
26	Gear wheel Kugghjul; Zahnrad; Roue dentée	1	149011	

© TOYOTA Industrial Equipment Europe SARL Ancenis, France

Pos	Description	Pcs	Part No	Note
27	Washer Bricka; Scheibe; Rondelle	1	20013	
28	Nut Mutter; Mutter; Ecrou	1	139713	
29	Washer Bricka; Scheibe; Rondelle	1	140097	
30	Nut Mutter; Mutter; Ecrou	1	139714	
31	Protection Skydd; Schutz; Protéege	1	140099	
32	Shim(0,05 mm) Shims; Schim; Cale		140101-001	Pcs as needed Antal efter behov; Anzhahl nach bedarf; Nombre éligible
32	Shim(0,1mm) Shims; Schim; Cale		140101-002	Pcs as needed Antal efter behov; Anzhahl nach bedarf; Nombre éligible
32	Shim(0,2 mm) Shims; Schim; Cale		140101-003	Pcs as needed Antal efter behov; Anzhahl nach bedarf; Nombre éligible
32	Shim(0,3 mm) Shims; Schim; Cale		140101-004	Pcs as needed Antal efter behov; Anzhahl nach bedarf; Nombre éligible
32	Shim(0,5 mm) Shims; Schim; Cale		140101-005	Pcs as needed Antal efter behov; Anzhahl nach bedarf; Nombre éligible
33	Bearing Lager; Lager; Roulement	1	26312	
34	Gear housing Växelhus; Getriebhäuse; Carter étauche	1	139700	
35	Cylinder pin Cylindrisk pinne; Zylinderstift; Goupille cylindre	1	21691	
36	Shim(0,05 mm) Shims; Schim; Cale		140103-001	Pcs as needed Antal efter behov; Anzhahl nach bedarf; Nombre éligible
36	Shim(0,1mm) Shims; Schim; Cale		140103-002	Pcs as needed Antal efter behov; Anzhahl nach bedarf; Nombre éligible
36	Shim(0,2 mm) Shims; Schim; Cale		140103-003	Pcs as needed Antal efter behov; Anzhahl nach bedarf; Nombre éligible
36	Shim(0,3 mm) Shims; Schim; Cale		140103-004	Pcs as needed Antal efter behov; Anzhahl nach bedarf; Nombre éligible
36	Shim(0,5 mm) Shims; Schim; Cale		140103-005	Pcs as needed Antal efter behov; Anzhahl nach bedarf; Nombre éligible
37	Bearing Lager; Lager; Roulement	1	29570	
38	Screw Skruv; Schraube; Vis	5	140254	
39	Axle Axel; Achse; Axe	1	139702	
40	Sealing Tätning; Dichtung; Joint	1	139712	
41	O-ring O-ring; O-ring; Joint torique	1	23620	
42	Cap Lock; Deckel; Couvercle	1	139705	
43	Screw Skruv; Schraube; Vis	6	21141	

© TOYOTA Industrial Equipment Europe SARL Ancenis, France

© TOYOTA Industrial Equipment Europe SARL Ancenis, France

3370-012

P0012474

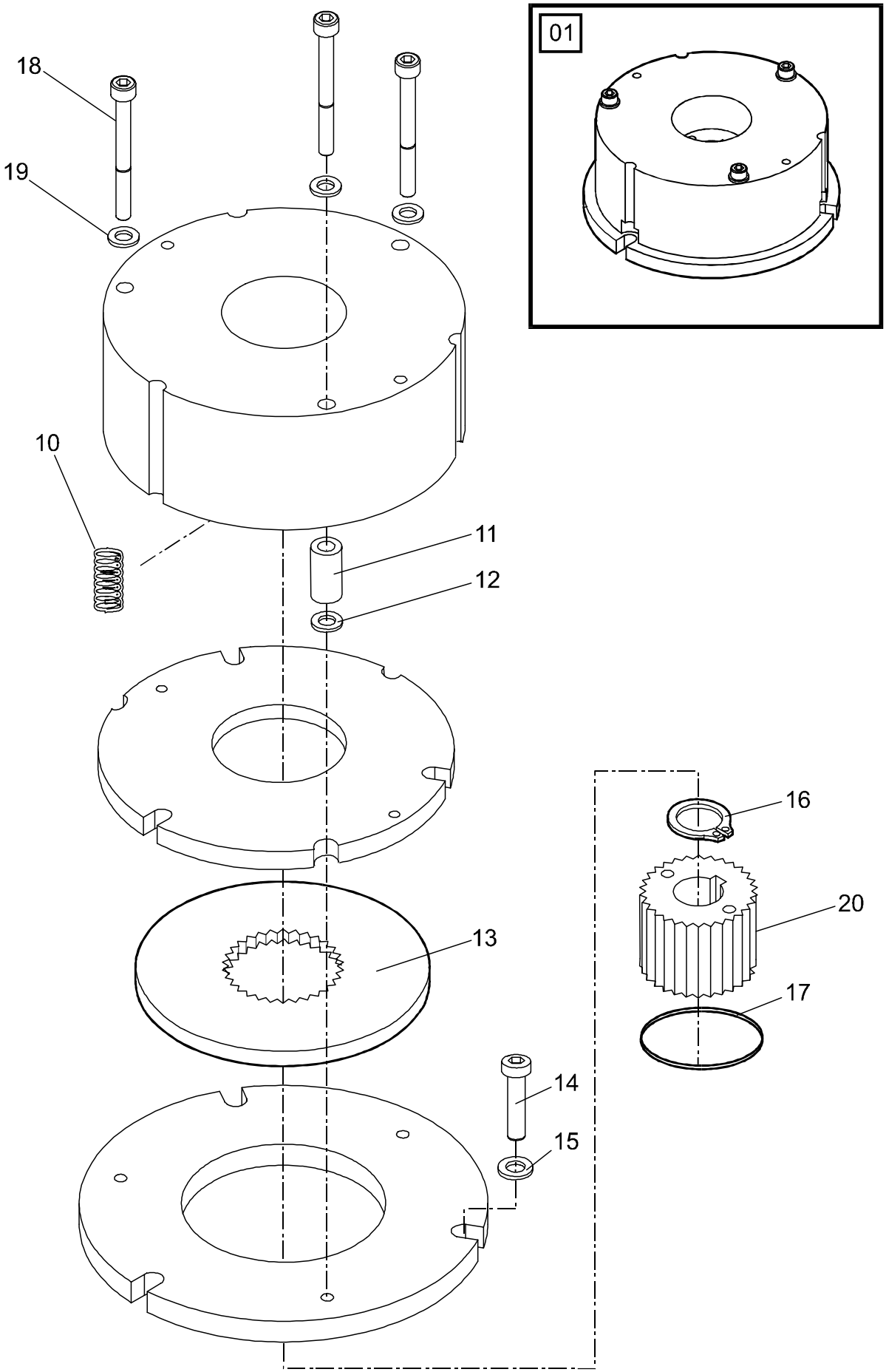

© TOYOTA Industrial Equipment Europe SARL Ancenis, France

3370-012 Electromagnetic parking brake [2001-04-02]

El-parkeringsbroms, magnetbroms; Elektro-Feststellbremse, Magnetbremse; Frein de stationnement électromagnétique

			680 7 PLL 24	410997 -
Pos	Description	Pcs	Part No	Note
01	Brake unit(Complete) Bromsenhet(Komplett); Bremseeinheit(Komplett); Unité de frein(Complet)	1	173608	
10	Spring Fjäder; Feder; Ressort	8	174922	
11	Spacer Distanshylsa; Abstandhülse; Douille entretoise	3	174921	
12	Shim Shims; Schim; Cale	15	174923	
13	Brake disc Bromsskiva; Innenlamelle; Disque de freinage	1	174920	
14	Screw Skruv; Schraube; Vis	3	20192	
15	Washer Bricka; Scheibe; Rondelle	3	20404	
16	Locking ring Spårring; Schliessring; Circlip	1	20019	
17	O-ring O-ring; O-ring; Joint torique	1	174924	
18	Screw Skruv; Schraube; Vis	3	178464	
19	Washer Bricka; Scheibe; Rondelle	3	20375	
20	Hub Nav; Nabe; Moyeu	1	179462	

© TOYOTA Industrial Equipment Europe SARL Ancenis, France

3530-030

P0011653

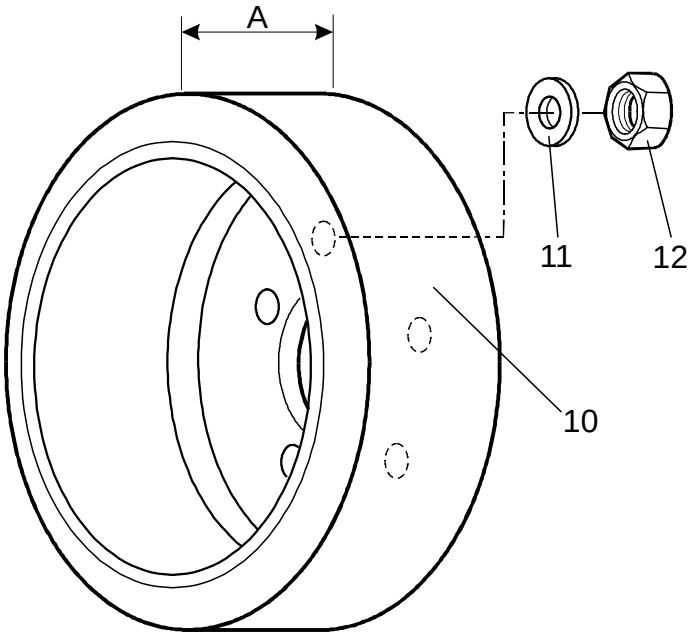

3530-030 Drive wheel

[2001-04-02]

Drivhjul; Antriebsrad; Roue motrice

			680 7 PLL 24	410997 -
Pos	Description	Pcs	Part No	Note
10	Drive wheel(Vulkollan) Drivhjul; Antriebrad; Roue entrainement	1	135161	A = 105 mm
10	Drive wheel(Vulkollan) Drivhjul; Antriebrad; Roue entrainement	1	138457	A = 75 mm
10	Drive wheel(Vulkollan) Drivhjul; Antriebrad; Roue entrainement	1	146061-001	Grooved Sajpad; Gemustert; Sculpture
10	Drive wheel(Tractothan) Drivhjul; Antriebrad; Roue entrainement	1	153874	A = 75 mm
11	Washer Bricka; Scheibe; Rondelle	5	158341	
12	Nut Mutter; Mutter; Ecrou	5	20776	

© TOYOTA Industrial Equipment Europe SARL Ancenis, France

© TOYOTA Industrial Equipment Europe SARL Ancenis, France

3540-030

P0012416

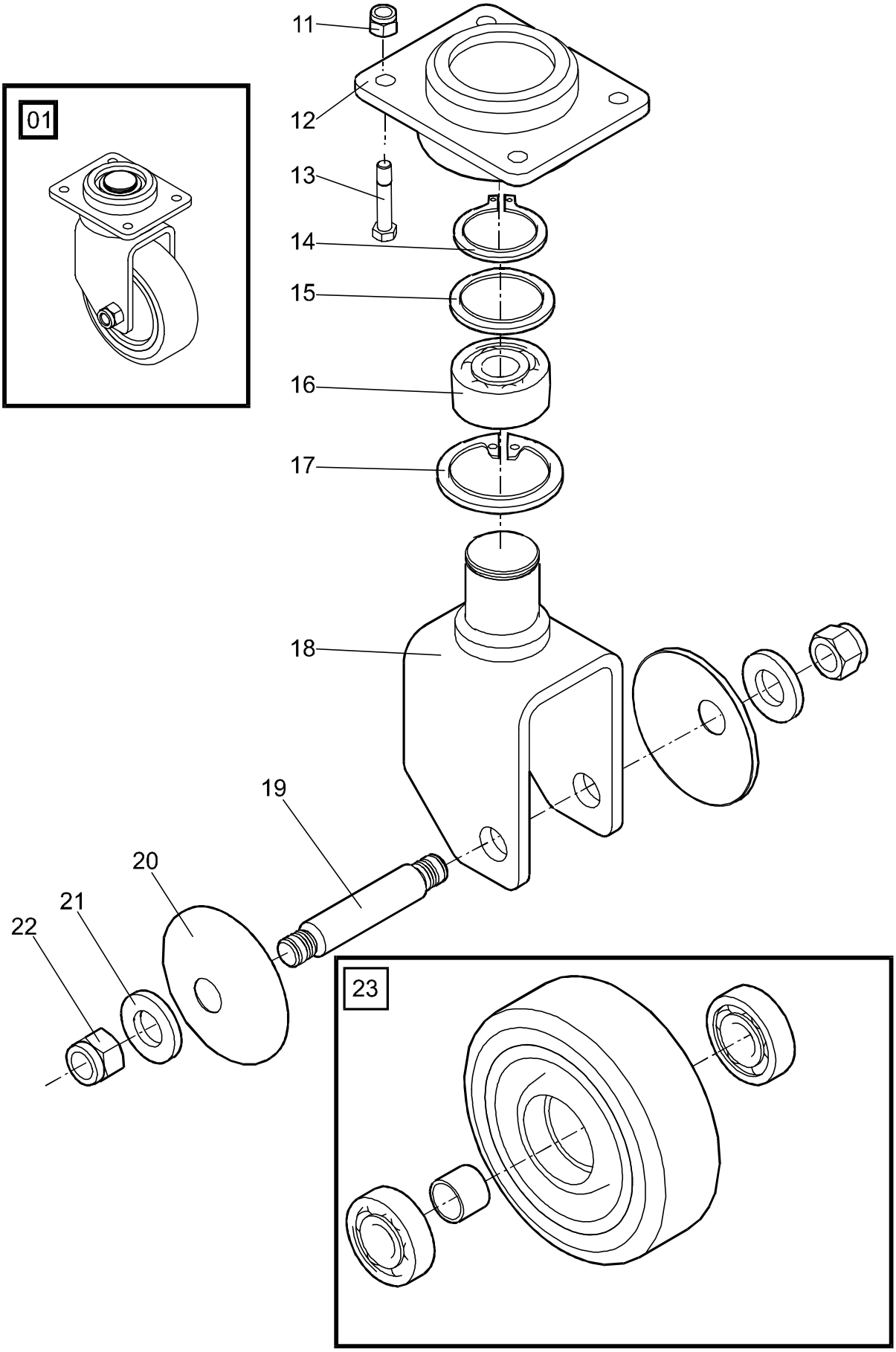

© TOYOTA Industrial Equipment Europe SARL Ancenis, France

3540-030 Support/castor wheels

[2001-04-02]

Stöd-/länkhjul; Stützräder/Gelenkrollen; Roues stabilisatrices/pivotantes

			680 7 PLL 24	410997 -
Pos	Description	Pcs	Part No	Note
01	Link wheel(Complete) Länkhjul(Komplett); Gelenkrad(Komplett); Roue articulée(Complet)	2	157846	
11	Nut Mutter; Mutter; Ecrou	8	20130	
12	Bracket Fäste; Halterung; Support	2	154390	
13	Screw Skruv; Schraube; Vis	8	26486	
14	Locking ring Spårring; Schliessring; Circlip	2	20922	
15	Washer Bricka; Scheibe; Rondelle	2	154399	
16	Bearing Lager; Lager; Roulement	2	29950	
17	Locking ring Spårring; Schliessring; Circlip	2	20076	
18	Wheel fork Hjulgaffel; Radgabel; Fourche de roue	2	157847	
19	Axle Axel; Achse; Axe	2	170391	
20	Protection Skydd; Schutz; Protéege	4	152376	
21	Distance piece Distans; Distanz; Distance	4	152374	
22	Nut Mutter; Mutter; Ecrou	4	21123	
23	Wheel complete Hjul komplett; Rad komplett; Roue complete	2	171029	

© TOYOTA Industrial Equipment Europe SARL Ancenis, France

3550-088

P0012395

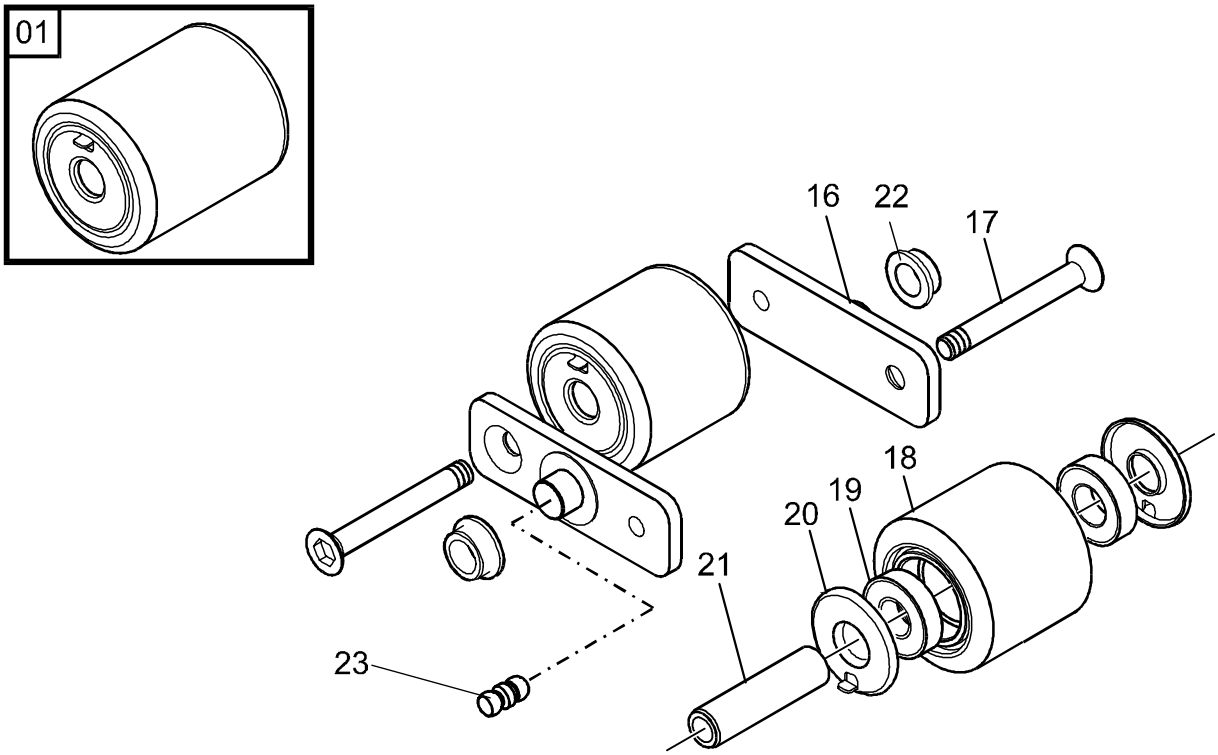

3550-088 Fork/support arm wheels

[2001-04-02]

Gaffel-/stödbenshjul; Gabel-/Stützarmrollen; Roues bras-support

			680 7 PLL 24	410997 -
Pos	Description	Pcs	Part No	Note
01	Bogie wheel(Complete) Boggiehjul(Komplett); Boggirad(Komplett); Roue de fourche bogie(Complet)	4	150131-001	
16	Link Länk; Gelenk; Bras	4	164603	
16	Link Länk; Gelenk; Bras	4	176500	Cold stores Fryshus; Gefrieranlage; Chambre frigor-ifique
17	Screw Skruv; Schraube; Vis	4	150132	
18	Wheel Hjul; Rad; Roue	4	150128-074	
19	Ball bearing Kullager; Kugellager; Roulement a billes	8	20906	
20	Sealing Tätning; Dichtung; Joint	8	150127	
21	Axle Axel; Achse; Axe	4	150126-076	
22	Bush Bussning; Bague; Bague	4	154703	
23	Greasing nipple Smörjnippel; Smiernippel; Graisseur	2	22410	

© TOYOTA Industrial Equipment Europe SARL Ancenis, France

© TOYOTA Industrial Equipment Europe SARL Ancenis, France

3580-024

P0012412

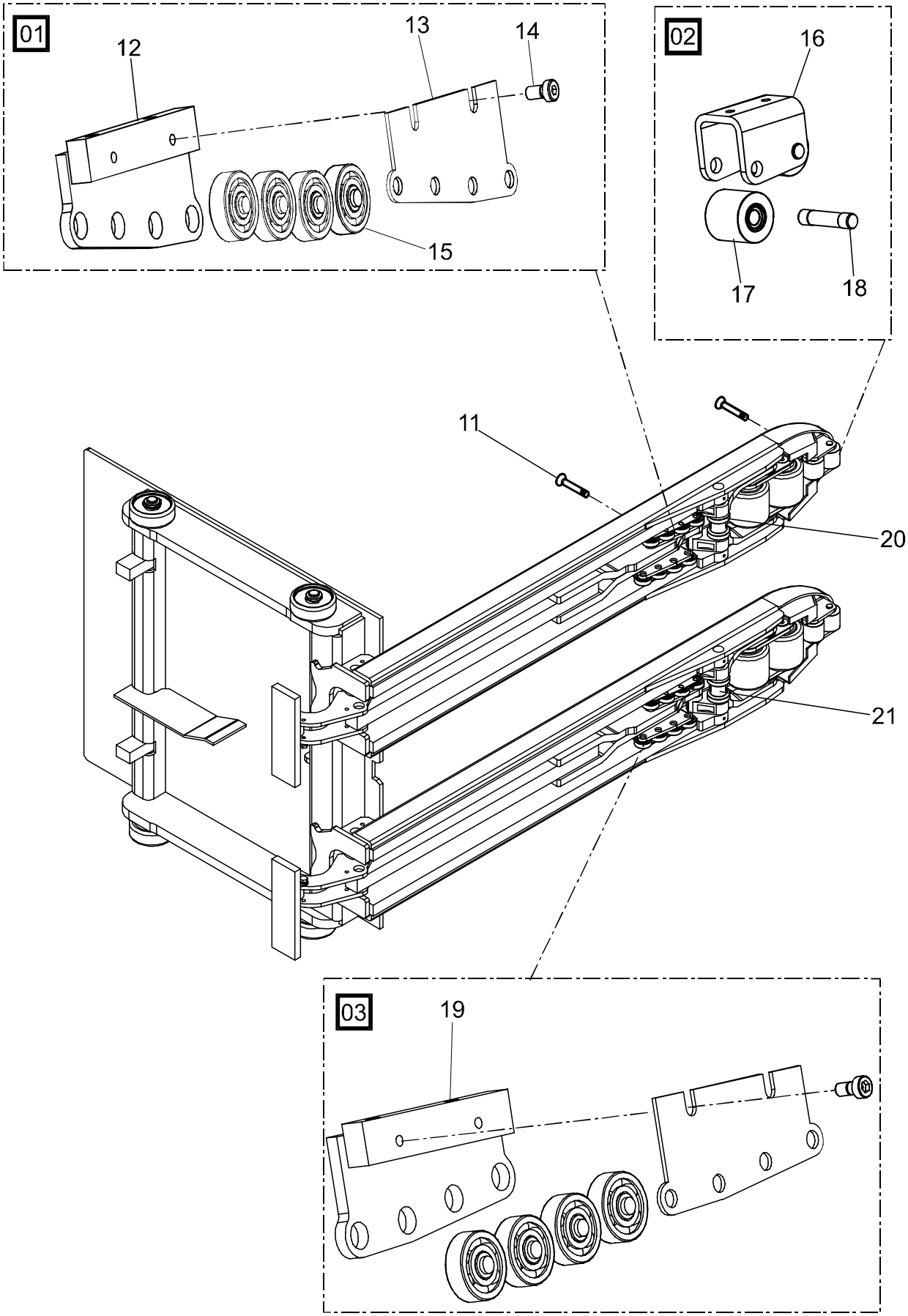

© TOYOTA Industrial Equipment Europe SARL Ancenis, France

3580-024 Guide rollers/wheels

[2001-04-02]

Löp-/sidostyrningshjul; Laufrollen, Seitenführungsrollen; Galets/roues de guidage

			680 7 PLL 24	410997 -
Pos	Description	Pcs	Part No	Note
01	Climber wheel Klätterhjul; Kletterrad; Roue de grimpeur	2	175236	
02	Climber wheel Klätterhjul; Kletterrad; Roue de grimpeur	2	133676	
03	Climber wheel Klätterhjul; Kletterrad; Roue de grimpeur	2	175237	
11	Screw Skruv; Schraube; Vis	12	160628	
12	Bracket Fäste; Halterung; Support	2	175238	
13	Plate Plåt; Platte; Plaque	4	175272	
14	Screw Skruv; Schraube; Vis	8	29606	
15	Ball bearing Kullager; Kugellager; Roulement a billes	16	22930	
16	Wheel bracket Hjulbygel; Radbügel; Support de roue	2	133673	
17	Climber wheel Klätterhjul; Kletterrad; Roue de grimpeur	4	133674	
18	Axle Axel; Achse; Axe	4	133675	
19	Bracket Fäste; Halterung; Support	2	175239	
20	Climber wheel Klätterhjul; Kletterrad; Roue de grimpeur	4	175273	
21	Sleeve Hylsa; Hülse; Douille	2	175324	

© TOYOTA Industrial Equipment Europe SARL Ancenis, France

4100-001

P0012333

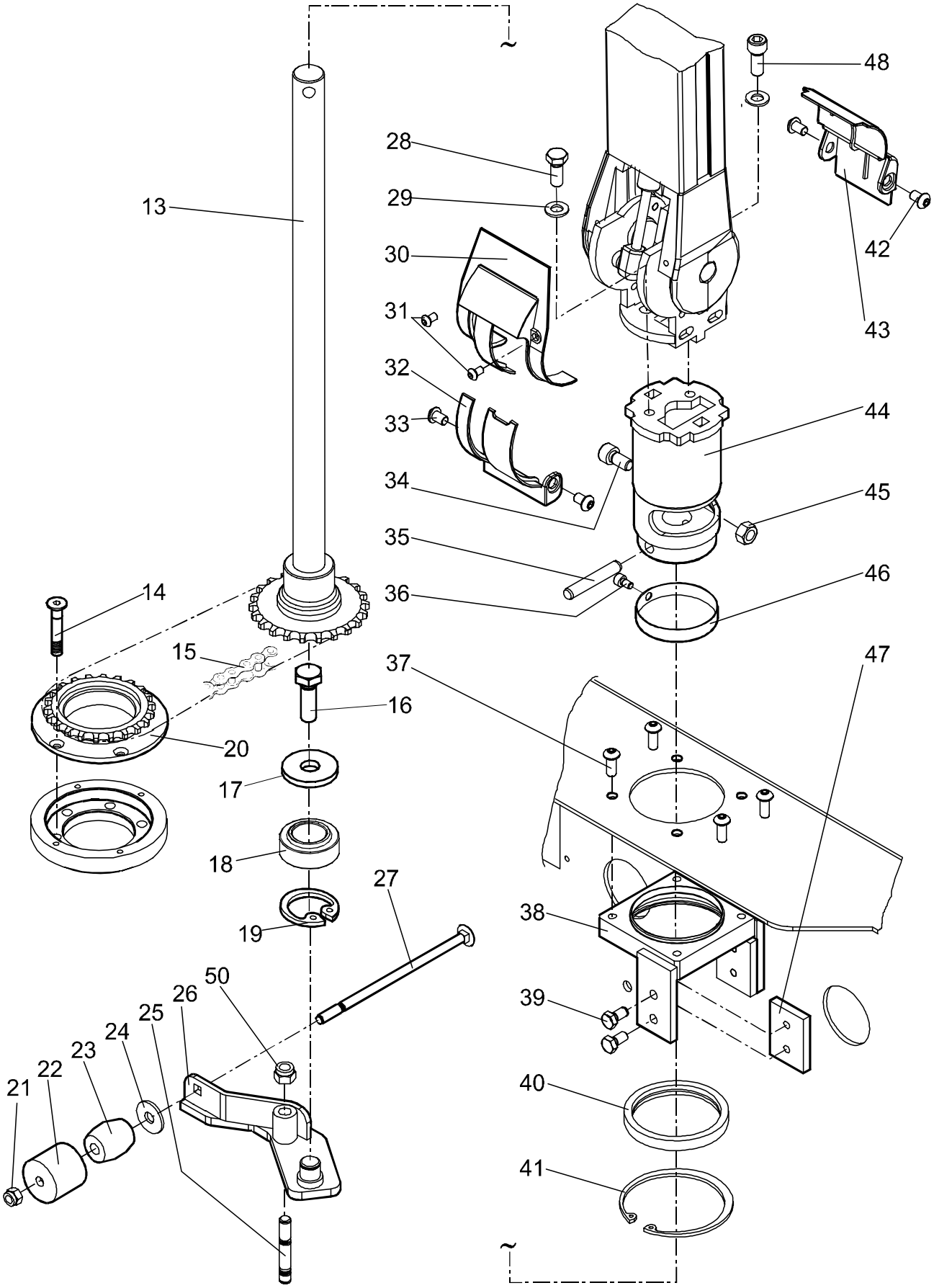

© TOYOTA Industrial Equipment Europe SARL Ancenis, France

4100-001 Mechanical steering system [2001-04-02]

Mekaniskt styrsystem; Mechanische Lenkanlage; Système de direction mécanique

			680 7 PLL 24	410997 -
Pos	Description	Pcs	Part No	Note
13	Axle Axel; Achse; Axe	1	175878	
14	Screw Skruv; Schraube; Vis	4	21442	
15	Chain Kedja; Ketten; Chaine	1	175436	
16	Screw Skruv; Schraube; Vis	1	20351	
17	Washer Bricka; Scheibe; Rondelle	1	42993	
18	Bearing Lager; Lager; Roulement	1	21156	
19	Locking ring Spårring; Schliessring; Circlip	1	21157	
20	Chain wheel Kedjehjul; Kettenrad; Roue de chaine	1	157840	
21	Nut Mutter; Mutter; Ecrou	1	20016	
22	Sleeve Hylsa; Hülse; Douille	1	173711	
23	Damper Dämpare; Dämpfer; Attenteur	1	133493-012	
24	Washer Bricka; Scheibe; Rondelle	1	28425	
25	Stud screw Pinnskruv; Stiftschraube; Prisonnier	1	169772	
26	Arm Arm; Arm; Bras	1	175389	
27	Screw Skruv; Schraube; Vis	1	29895	
28	Screw Skruv; Schraube; Vis	1	20044	
29	Washer Bricka; Scheibe; Rondelle	2	126723-004	
30	Protection Skydd; Schutz; Protéege	1	169271	
31	Screw Skruv; Schraube; Vis	2	171823	
32	Protection Skydd; Schutz; Protéege	1	169272	
33	Screw Skruv; Schraube; Vis	2	28970	
34	Screw Skruv; Schraube; Vis	1	23924	
35	Pin Pinne; Stäbchen; Cheville	1	173173	
36	Screw Skruv; Schraube; Vis	1	29909	
37	Screw Skruv; Schraube; Vis	4	173212	
38	Housing Lagerhus; Gehäuse; Carter de roulement	1	169289	
39	Screw Skruv; Schraube; Vis	4	21935	
40	Bush Bussning; Bague; Bague	1	169282	
41	Locking ring Spårring; Schliessring; Circlip	1	174366	
42	Screw Skruv; Schraube; Vis	2	28970	
43	Protection Skydd; Schutz; Protéege	1	169284	

© TOYOTA Industrial Equipment Europe SARL Ancenis, France

Pos	Description	Pcs	Part No	Note
44	Steering pipe Styrrör; Steuerrohr; Tube de direction	1	169251	
45	Nut Mutter; Mutter; Ecrou	1	20130	
46	Sleeve Hylsa; Hülse; Douille	1	169286	
47	Plate Plåt; Platte; Plaque	2	169288	
48	Screw Skruv; Schraube; Vis	1	20335	
49	Chain lock Kedjelås; Kettenschloss; Arret de chaine	1	26011	
50	Nut Mutter; Mutter; Ecrou	1	20130	

© TOYOTA Industrial Equipment Europe SARL Ancenis, France

© TOYOTA Industrial Equipment Europe SARL Ancenis, France

4110-187

P0010995

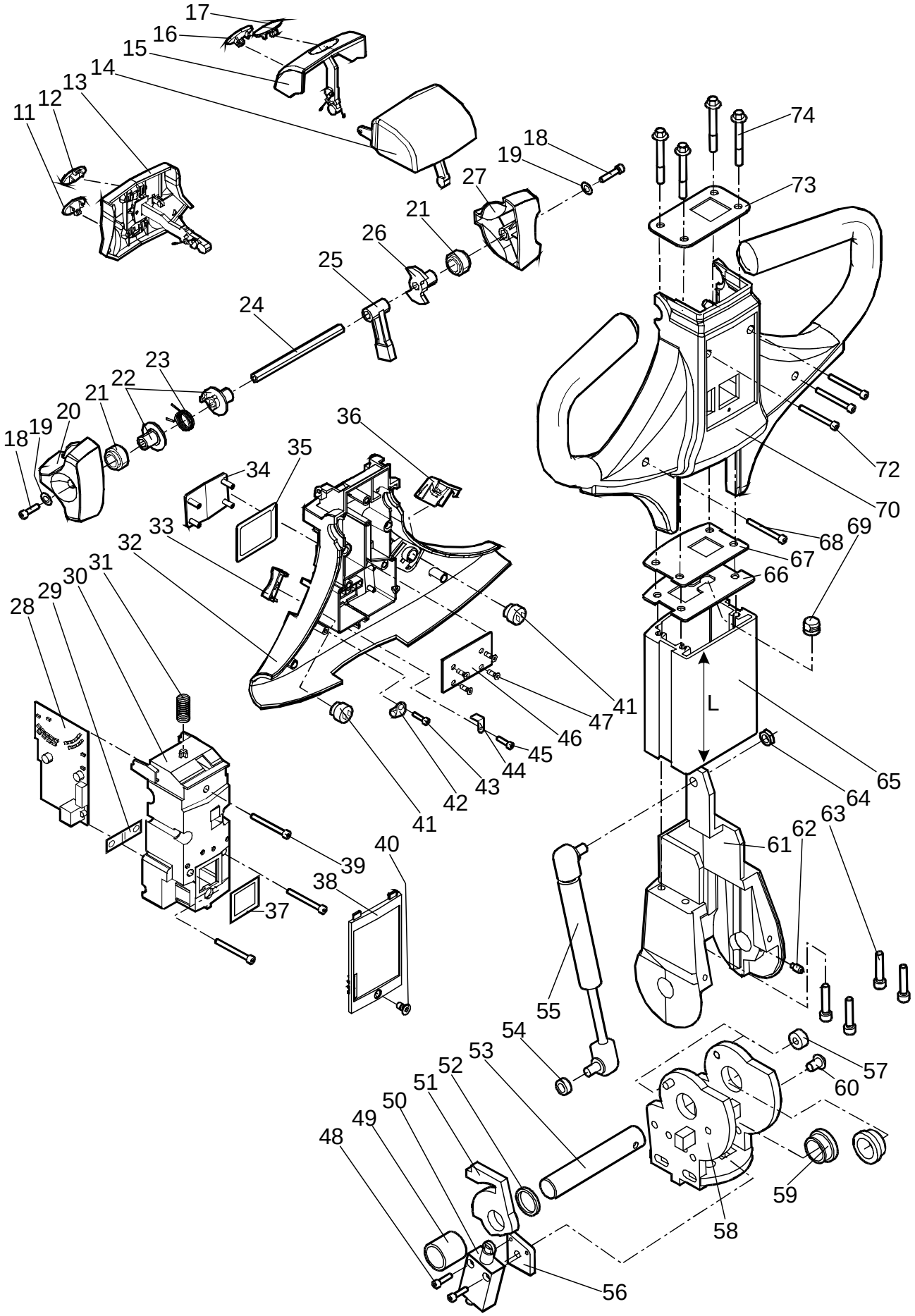

© TOYOTA Industrial Equipment Europe SARL Ancenis, France

4110-187 Steering arm / wheel / lever

[2001-04-02]

Styr- arm/ratt/spak; Deichsel, Lenkrad-hebel; Timon/volant/levier de direction

			680 7 PLL 24	410997 -
Pos	Description	Pcs	Part No	Note
11	Symbol plate(Fork lower) Symbolplatta(Gaffelsänk); Zeichenplatte(Gabbelabsenkung); Plaque de symbole(Descente de la fourche)	1	171585-003	
12	Symbol plate(Fork lift) Symbolplatta(Gaffellyft); Zeichenplatte(Hubgabel); Plaque de symbole(Fourche élévation)	1	171585-004	
13	Push-button(Complete) Tryckknapp(Komplett); Druckknopf(Komplett); Bouton(Complet)	1	171666	Front Främre; Vordere; Avant
14	Push-button(Complete) Tryckknapp(Komplett); Druckknopf(Komplett); Bouton(Complet)	1	171664	Switch for safety reversing Brytare för säkerhetsreversering; Sicherheitsrücklaufschalter; Bouton rouge anti-écrasement
15	Push-button(Complete) Tryckknapp(Komplett); Druckknopf(Komplett); Bouton(Complet)	1	171665	upper övre; obere; supérieur
16	Symbol plate(No function) Symbolplatta(Ingen funktion); Zeichenplatte(keine Funktion); Plaque de symbole(aucune fonction)	1	171583	
17	Symbol plate(No function) Symbolplatta(Ingen funktion); Zeichenplatte(keine Funktion); Plaque de symbole(aucune fonction)	1	171583	
18	Screw Skruv; Schraube; Vis	2	171708	
19	Washer Bricka; Scheibe; Rondelle	2	171710	
20	Rocker(Left) Vippa(Vänster); Kippe(Links); Levier oscillant(Gauge)	1	167841	
21	Bearing Lager; Lager; Roulement	2	167846	
22	Support Hållare; Stossfänger; Absorber des chocs	2	167844	
23	Spring Fjäder; Feder; Ressort	1	167840	
24	Axle Axel; Achse; Axe	1	167843	
25	Arm Arm; Arm; Bras	1	167845	
26	Stop lug Stoppklack; Anschlagsstück; Arréter	1	167830	
27	Rocker(Right) Vippa(Höger); Kippe(Recht); Levier oscillant(Droit)	1	167842	
28	Electronic card Elektronikkort; Elektronikkarte; Carte électronique	1	167833-001	Without program software Utan programvara; Ohne programmierung; Sans programme
28	Electronic card(Including software) Elektronikkort(Inklusive programvara); Elektronikkarte(Inklusive software); Carte électronique(Compris logiciel)	1	179927-401	2 PLL 24 M
28	Electronic card(Including software) Elektronikkort(Inklusive programvara); Elektronikkarte(Inklusive software); Carte électronique(Compris logiciel)	1	179927-501	2 PLL 24 S
29	Spring Fjäder; Feder; Ressort	1	167839	
30	Housing Kåpa; Haus; Chape	1	167835	
31	Spring Fjäder; Feder; Ressort	1	167836	
32	Housing Kåpa; Haus; Chape	1	167822	
33	Push-button(Left) Tryckknapp(Vänster); Druckknopf(Links); Bouton(Gauge)	1	167848	Horn Signalhorn; Signal; Signal
34	Cap(Transparent plastic) Lock(Plastglas); Deckel(Organisches glass); Couvercle(Plastique transparent)	1	167823	
35	Sealing Tätning; Dichtung; Joint	1	169910	

© TOYOTA Industrial Equipment Europe SARL Ancenis, France

Pos	Description	Pcs	Part No	Note
36	Push-button(Right) Tryckknapp(Höger); Druckknopf(Recht); Bouton(Droit)	1	167847	Horn Signalhorn; Signal; Signal
37	Sealing Tätning; Dichtung; Joint	1	167850	
38	Cap Lock; Deckel; Couvercle	1	171659	
38	Cap(Incl. keypad) Lock(Inkl. tangentbord); Deckel(Inkl. Tastatur); Couvercle(Incl. Tablette à clefs)	1	171660	
39	Screw Skruv; Schraube; Vis	3	171707	
40	Screw Skruv; Schraube; Vis	1	171709	
41	Switch Brytare; Schalter; Rupteur	2	171655	
42	Cable tie Kablagehållare; Kabelabbinder; Frette de câblage	2	171734	
43	Screw Skruv; Schraube; Vis	2	171713	
44	Cable tie Kablagehållare; Kabelabbinder; Frette de câblage	2	171662	
45	Screw Skruv; Schraube; Vis	2	171712	
46	Display Display; Display; Display	1	167832-001	
47	Screw Skruv; Schraube; Vis	4	171711	
48	Screw Skruv; Schraube; Vis	2	20243	
49	Distance piece Distans; Distanz; Distance	1	169270-001	
50	Limit switch(Including arm) Gränslägesbrytare(Med arm); Grenzschalter(Mit arm); Limiteur de course(Avec bras)	1	169088	
51	Cam Nock; Nocken; Came	1	169258	
52	Distance piece Distans; Distanz; Distance	1	169270-002	
53	Axle Axel; Achse; Axe	1	169259	
54	Bush Bussning; Bague; Bague	1	169268	
55	Gas suspension Gasfjäder; Gasfederung; Suspension à gaz	1	153960-066	
56	Bracket Fäste; Halterung; Support	1	169267	
57	Rubber buffer Gummibuffert; Gummipuffer; tampon en caoutchouc	2	178105	
58	Yoke Ok; Joch; Manchon	1	169252	
59	Bush Bussning; Bague; Bague	2	140177	
60	Screw Skruv; Schraube; Vis	1	28970	
61	Bracket Fäste; Halterung; Support	1	169253	
62	Stop screw Stoppskruv; Einstellschraube; Vis de arretoire	1	173418	
63	Screw Skruv; Schraube; Vis	4	171342	
64	Nut Mutter; Mutter; Ecrou	1	21110	
65	Section Profil; Profil; Section	1	169254-001	
66	Plate Plåt; Platte; Plaque	1	169249	

© TOYOTA Industrial Equipment Europe SARL Ancenis, France

Pos	Description	Pcs	Part No	Note
67	Plate Plåt; Platte; Plaque	1	169255	
68	Screw Skruv; Schraube; Vis	2	171705	
69	Conduit entry Kabelgenomföring; Kabeldurchgang; Traversée de câble	1	171409	
70	Handle Handtag; Handgriff; Poignée.	1	167821	
72	Screw Skruv; Schraube; Vis	2	171706	
73	Plate Plåt; Platte; Plaque	1	169248	
74	Screw Skruv; Schraube; Vis	4	171403	

© TOYOTA Industrial Equipment Europe SARL Ancenis, France

4300-003

P0012415

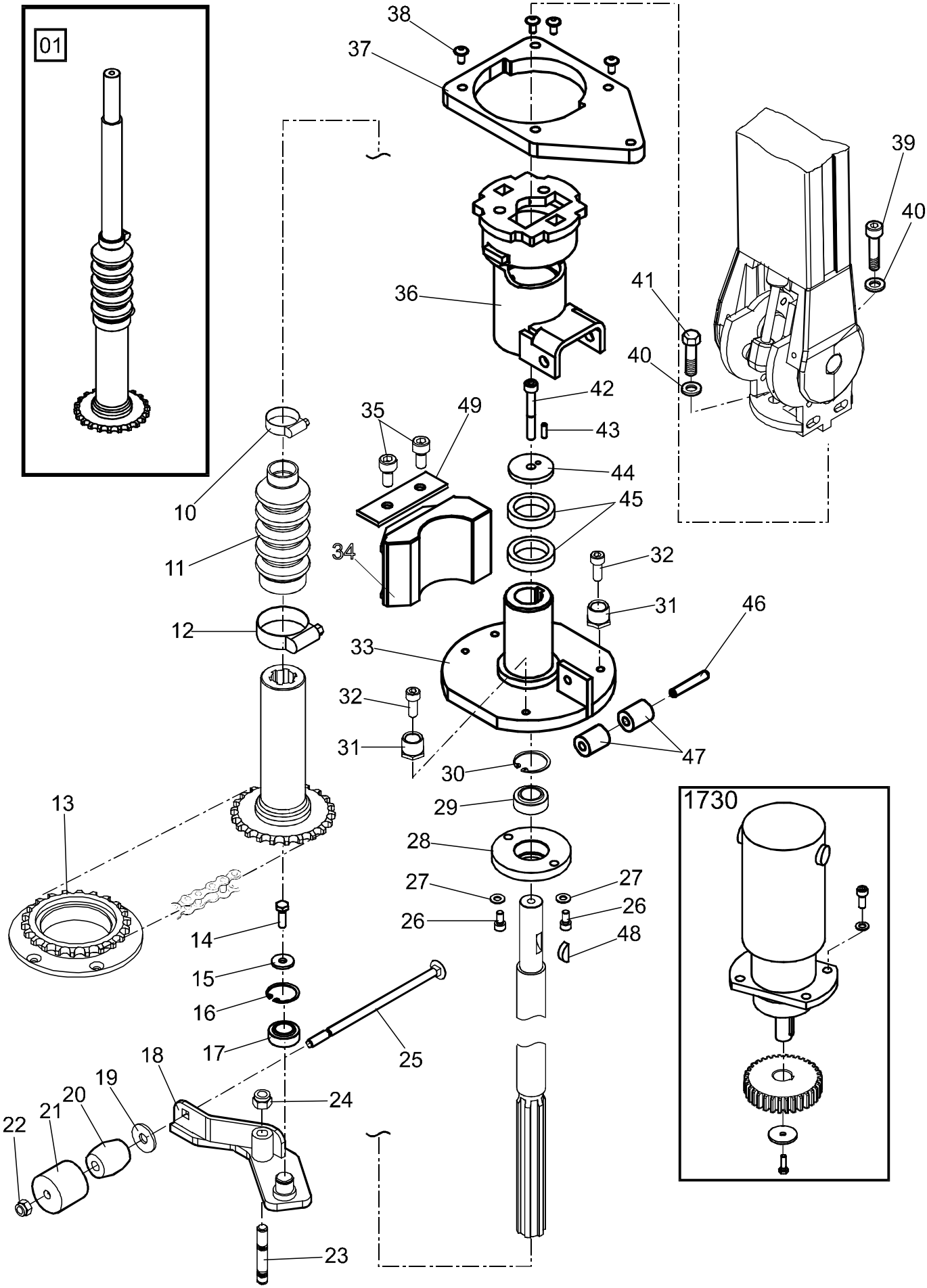

© TOYOTA Industrial Equipment Europe SARL Ancenis, France

4300-003 Electric steering system

[2001-04-02]

Elektriskt styrsystem; Elektro-Lenkung ; Système de direction électrique

			680 7 PLL 24	410997 -
Pos	Description	Pcs	Part No	Note
01	Axle(Complete) Axel(Komplett); Achse(Komplett); Axe(Complet)	1	177410	
10	Clamp Klamma; Rohrschelle; Collier	1	20410	
11	Dust guard Damask; Gamaschen; Dispositif de protection	1	175433	
12	Clamp Klamma; Rohrschelle; Collier	1	21239	
13	Chain wheel Kedjehjul; Kettenrad; Roue de chaine	1	157840	
14	Screw Skruv; Schraube; Vis	1	20351	
15	Washer Bricka; Scheibe; Rondelle	1	42993	
16	Locking ring Spårring; Schliessring; Circlip	1	21157	
17	Bearing Lager; Lager; Roulement	1	21156	
18	Arm Arm; Arm; Bras	1	175389	
19	Washer Bricka; Scheibe; Rondelle	1	28425	
20	Damper Dämpare; Dämpfer; Attenteur	1	133493-012	
21	Sleeve Hylsa; Hülse; Douille	1	173711	
22	Nut Mutter; Mutter; Ecrou	1	20016	
23	Stud screw Pinnskruv; Stiftschraube; Prisonnier	1	169772	
24	Nut Mutter; Mutter; Ecrou	1	20130	
25	Screw Skruv; Schraube; Vis	1	29895	
26	Screw Skruv; Schraube; Vis	2	20335	
27	Washer Bricka; Scheibe; Rondelle	2	20348	
28	Ring Ring; Ring; Bague	1	173988	
29	Bearing Lager; Lager; Roulement	1	21156	
30	Locking ring Spårring; Schliessring; Circlip	1	21157	
31	Eccentric Excenter; Exzenter; Excentrique	2	175604	
32	Screw Skruv; Schraube; Vis	2	20400	
33	Support Hållare; Stossfänger; Absorber des chocs	1	175393	
34	Logic box Logikbox; Steuerbox; Boite de lougique	1	169904-001	
35	Screw Skruv; Schraube; Vis	3	20333	
36	Steering pipe Styrrör; Steuerrohr; Tube de direction	1	173983	
37	Lamina Platta; Platten; Platine	1	175473	
38	Screw Skruv; Schraube; Vis	4	29544	
39	Screw Skruv; Schraube; Vis	1	20335	

© TOYOTA Industrial Equipment Europe SARL Ancenis, France

Pos	Description	Pcs	Part No	Note
40	Washer Bricka; Scheibe; Rondelle	2	126723-004	
41	Screw Skruv; Schraube; Vis	1	20044	
42	Screw Skruv; Schraube; Vis	1	23577	
43	Locking pin Spännstift; Spannstift; Goupille	1	21091	
44	Washer Bricka; Scheibe; Rondelle	1	175396	
45	Bearing Lager; Lager; Roulement	2	175395	
46	Locking pin Spännstift; Spannstift; Goupille	1	20189	
47	Buffer Buffert; Puffer; Atténnateur	2	137162-031	
48	Key Kil; Keil; Clavette	1	26547	
49	Washer Bricka; Scheibe; Rondelle	1	178261	

© TOYOTA Industrial Equipment Europe SARL Ancenis, France

© TOYOTA Industrial Equipment Europe SARL Ancenis, France

5160-032

P0011444

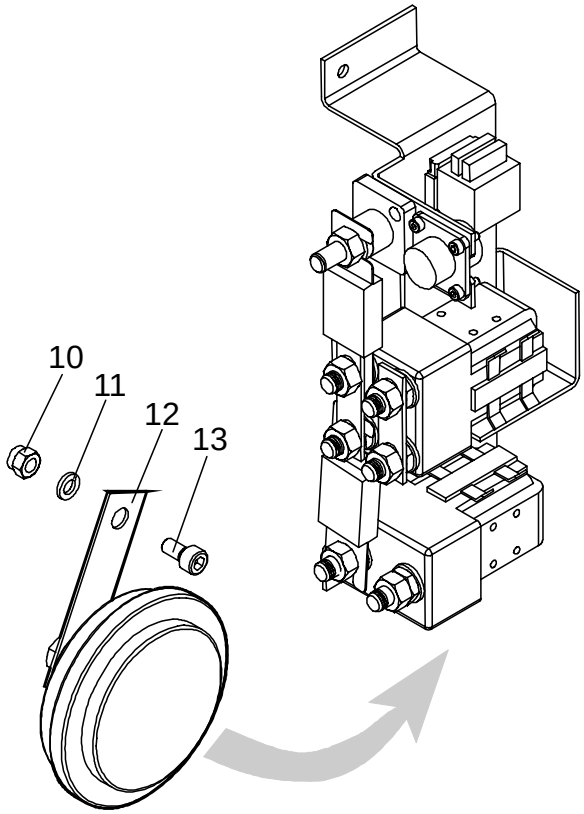

5160-032 General alarm signals (audible/visual)

[2001-04-02]

Signal/larm (ljud-/ljus-); Warn-/Alarmsignale (Aukust./Opt.); Avertisseur (sonore/lumineux), dispositifs d'alarme

			680 7 PLL 24	410997 -
Pos	Description	Pcs	Part No	Note
10	Nut Mutter; Mutter; Ecrou	1	20433	
11	Washer Bricka; Scheibe; Rondelle	1	20375	
12	Horn Signalhorn; Signalhorn; Avertisseur	1	170729	
13	Screw Skruv; Schraube; Vis	1	20333	

© TOYOTA Industrial Equipment Europe SARL Ancenis, France

5190-030

P0012064

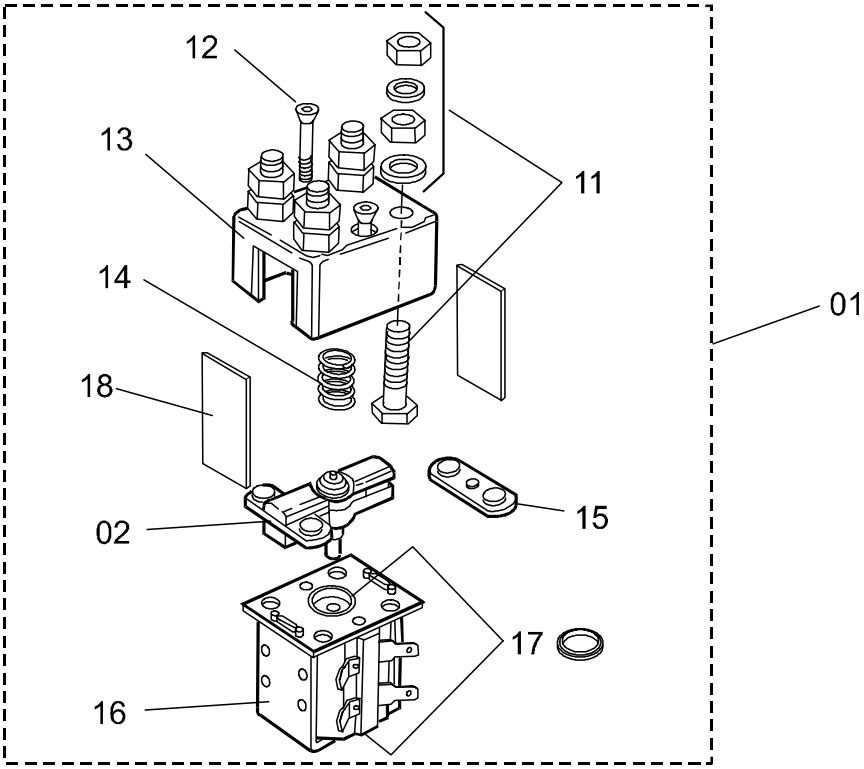

5190-030 Battery cut out connector/contactor

[2001-04-02]

Batterifrånskiljare, huvudkontaktor; Batterietrennung, Hauptkontaktor; Coupe-circuit de batterie, contacteur

			680 7 PLL 24	410997 -
Pos	Description	Pcs	Part No	Note
01	Contactor Kontaktor; Kontaktor; Contacteur	1	177912	
02	Moving contact holder (less contacts) Rörlig kontakthållare (utan kontakter); Beweglicher Kontakthalter (ohne Kontakten); Support de contact mobile (sans contact)	1	154561	
11	Fixed contact(Complete) Fast kontakt(Komplett); Fester Kontakt(Komplett); Contact fixé(Complet)	4	154551	
12	Screw Skruv; Schraube; Vis	2	154549	
13	Housing Kåpa; Haus; Chape	1	154560	
14	Spring Fjäder; Feder; Ressort	1	161484	
15	Contact Kontakt; Kontakt; Contact	2	154562	
16	Magnetic coil Magnetspole; Magnetspule; Bobine électrique	1	173918	
17	Housing Kåpa; Haus; Chape	2	165416	
18	Dust sheild Dammskydd; Staubkappe; Protector de poussières	2	177922	

© TOYOTA Industrial Equipment Europe SARL Ancenis, France

5190-038

P0012558

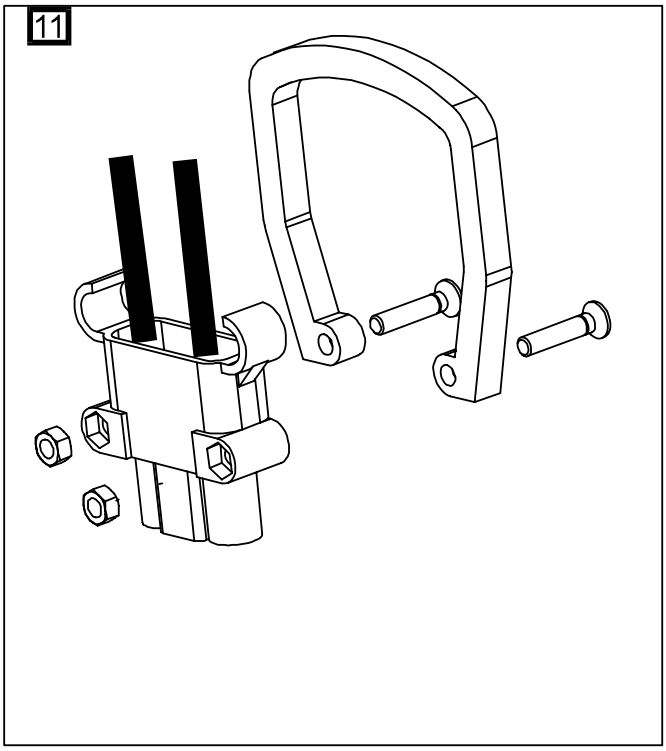

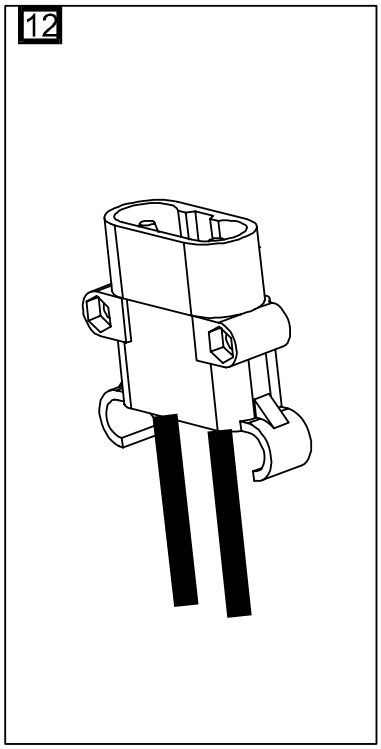

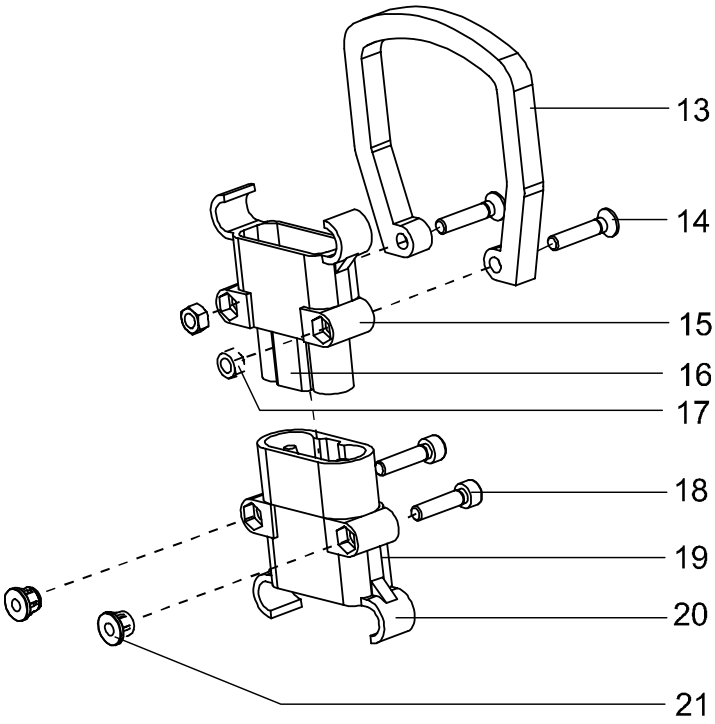

© TOYOTA Industrial Equipment Europe SARL Ancenis, France

5190-038 Battery cut out connector/contactor [2001-04-02]

Batterifrånskiljare, huvudkontaktor; Batterietrennung, Hauptkontaktor; Coupe-circuit de batterie, contacteur

			680 7 PLL 24	410997 -
Pos	Description	Pcs	Part No	Note
11	Battery connector with cable cpl. Batterihandske med kabel kpl.; Stromstecker mit Kabel Kpl; Bloc de connextion avec câble cpl.	1	169084	
12	Battery connector with cable cpl. Batterihandske med kabel kpl.; Stromstecker mit Kabel Kpl; Bloc de connextion avec câble cpl.	1	169096	
13	Handle Handtag; Handgriff; Poignée.	1	171687	
14	Screw Skruv; Schraube; Vis	2	29985	
15	Connector socket Kabelhandske; Leistungverbinder; Connexion socle.	1	171682	
16	Gender key Kodpinne; Code-Stift; Code-goupille	1	171704-002	
17	Nut Mutter; Mutter; Ecrou	2	20433	
18	Screw Skruv; Schraube; Vis	2	20224	
19	Gender key Kodpinne; Code-Stift; Code-goupille	1	171704-001	
20	Connector socket Kabelhandske; Leistungverbinder; Connexion socle.	1	171683	
21	Nut Mutter; Mutter; Ecrou	2	172413	

© TOYOTA Industrial Equipment Europe SARL Ancenis, France

5310-057

P0012374

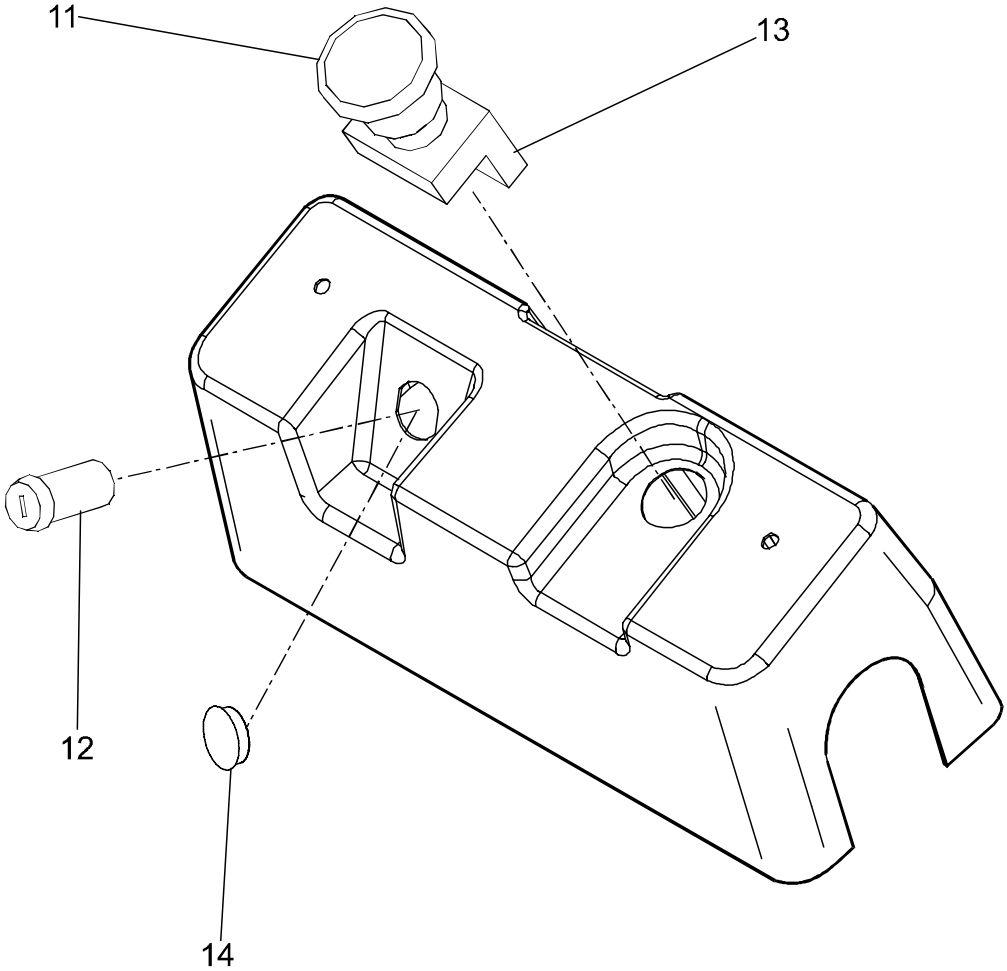

5310-057 Start/stop switch

[2001-04-02]

Start/stoppströmställare; Schalter Fahren/Anhalten; Interrupteur (coupe-circuit) démarrage/arrêt

			680 7 PLL 24	410997 -
Pos	Description	Pcs	Part No	Note
11	Push-button(Red) Tryckknapp(Röd); Druckknopf(Rot); Bouton(Rouge)	1	155567	
12	Ignition switch Startlås; Zündschloss; Contact-démarreur	1	171654	
13	Contact device Kontaktblock; Kontakteinheit; Unite de contact	1	155568	
14	Cap Lock; Deckel; Couvercle	1	139240-190	

© TOYOTA Industrial Equipment Europe SARL Ancenis, France

5460-035

P0011453

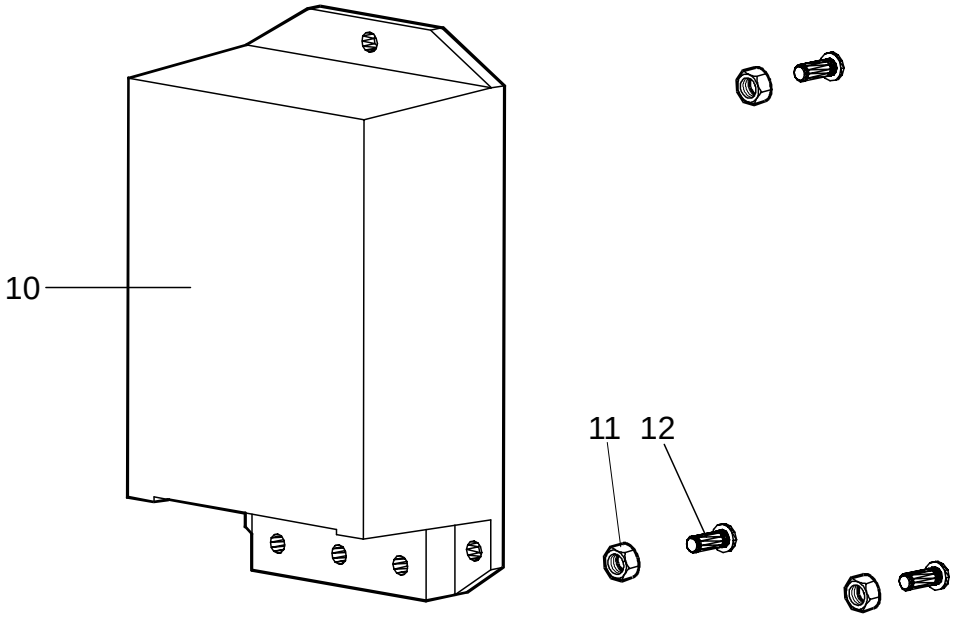

5460-035 Transistor panel

[2001-04-02]

Transistorpanel ; Transistorpanel; Panneau transistor

			680 7 PLL 24	410997 -
Pos	Description	Pcs	Part No	Note
10	Transistor controller Transistorregulator; Transistorregulator; Regulateur des transistors	1	169073-001	
11	Nut Mutter; Mutter; Ecrou	3	20249	
12	Screw Skruv; Schraube; Vis	3	29978	

© TOYOTA Industrial Equipment Europe SARL Ancenis, France

5590-014

P0012437

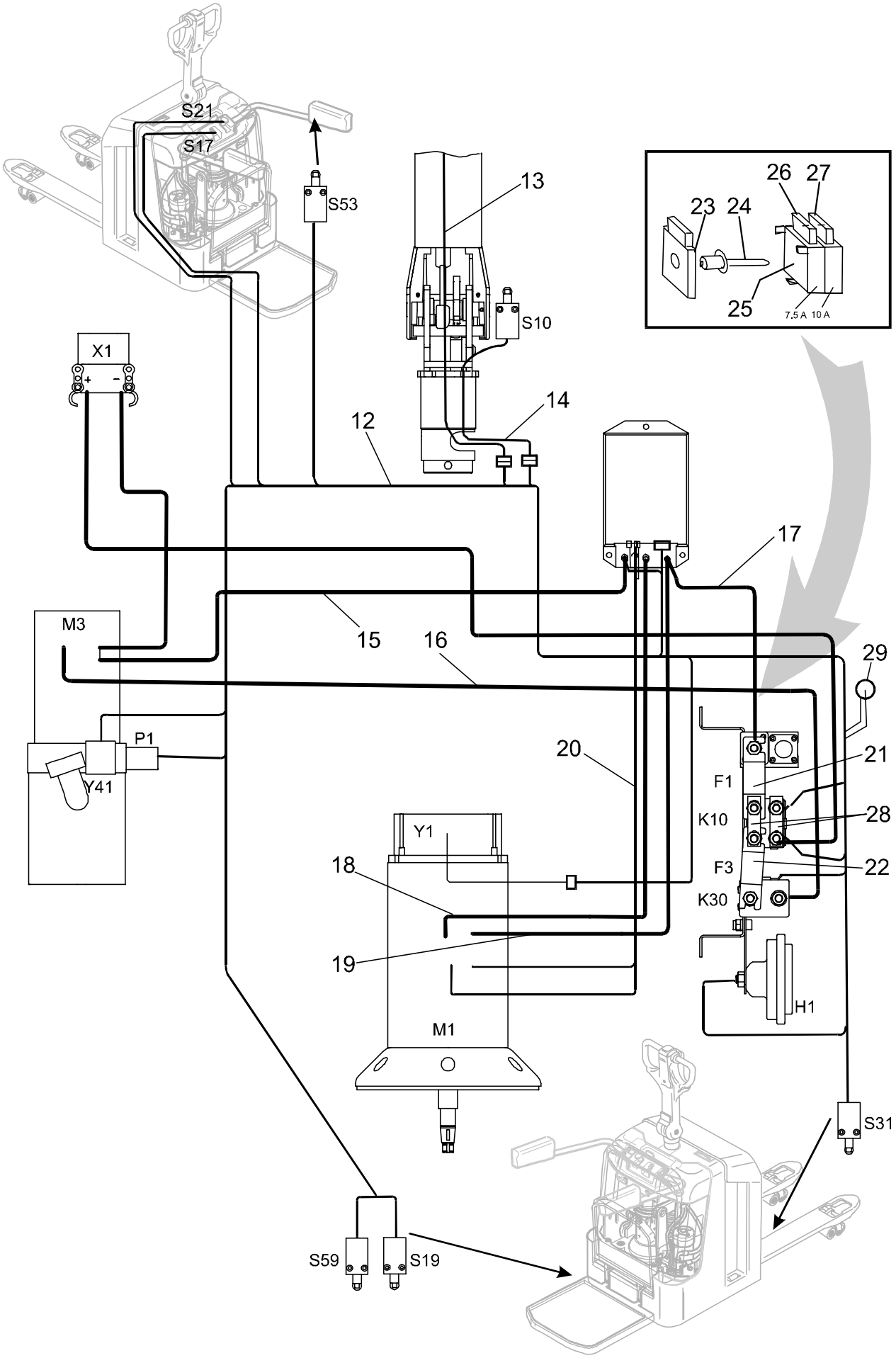

© TOYOTA Industrial Equipment Europe SARL Ancenis, France

5590-014 Work function harnesses/ fuse [2001-04-02]

Arbetsfunktionskablage/ -säkring; Steurstromverkabelung/ -Sicherung; Câblage/ fusible fonction de travail

			680 7 PLL 24	410997 -
Pos	Description	Pcs	Part No	Note
12	Wiring harness complete Kablage komplett; Kabelsatz Komplett; Câblage complet	1	178313	
13	Wiring harness Kablage; Kabelsatz; Câblage	1	169083	
14	Limit switch(Including arm) Gränslägesbrytare(Med arm); Grenzschalter(Mit arm); Limiteur de course(Avec bras)	1	169088	
15	Cable Kabel; Kabel; Câble	1	169082	
16	Cable Kabel; Kabel; Câble	1	169075	
17	Cable Kabel; Kabel; Câble	1	169081	
18	Cable Kabel; Kabel; Câble	1	172638	
19	Cable Kabel; Kabel; Câble	1	172637	
20	Wiring harness Kablage; Kabelsatz; Câblage	1	169074	
21	Fuse(160 A) Säkring; Sicherung; Fusible	1	173172-160	
22	Fuse(125 A) Säkring; Sicherung; Fusible	1	173172-125	
23	Bracket Fäste; Halterung; Support	1	135422	
24	Nit Nit; Niet; Rivet	1	28959	
25	Fuse holder Säkringshållare; Sicherungshalter; Porte-fusibles	2	135421	
26	Fuse(7,5A) Säkring; Sicherung; Fusible	1	122308-075	
27	Fuse(10A) Säkring; Sicherung; Fusible	1	122308-100	
28	Copper bar Kopparskena; Kupferstab; Plaque de cuivre	2	162601	
29	Resistance Motstånd; Widerstand; Résistance	1	169142-005	

© TOYOTA Industrial Equipment Europe SARL Ancenis, France

5600-001

P0012440

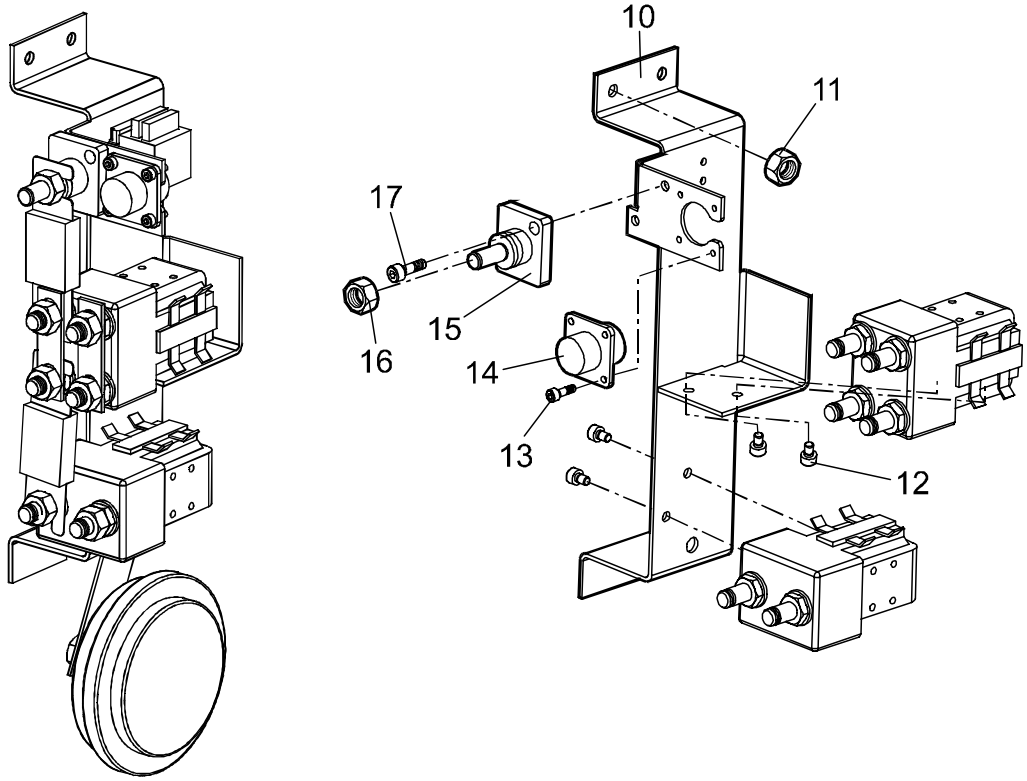

5600-001 Power system for working function

[2001-04-02]

Effektsystem arbetsfunktion; Leistungssystem Arbeitsfunktion; Circuit (Puissance) fonction de travail

			680 7 PLL 24 410997 -	
Pos	Description	Pcs	Part No	Note
10	Bracket Fäste; Halterung; Support	1	178625	
11	Nut Mutter; Mutter; Ecrou	2	21094	
12	Screw Skruv; Schraube; Vis	4	22445	
13	Screw Skruv; Schraube; Vis	4	29966	
14	Contact Kontakt; Kontakt; Contact	1	157649	
15	Terminal board Kopplingsplint; Schaltplint; Tableau de connections	1	173261	
16	Nut Mutter; Mutter; Ecrou	1	20081	
17	Screw Skruv; Schraube; Vis	2	27500	

© TOYOTA Industrial Equipment Europe SARL Ancenis, France

5610-015

P0008945

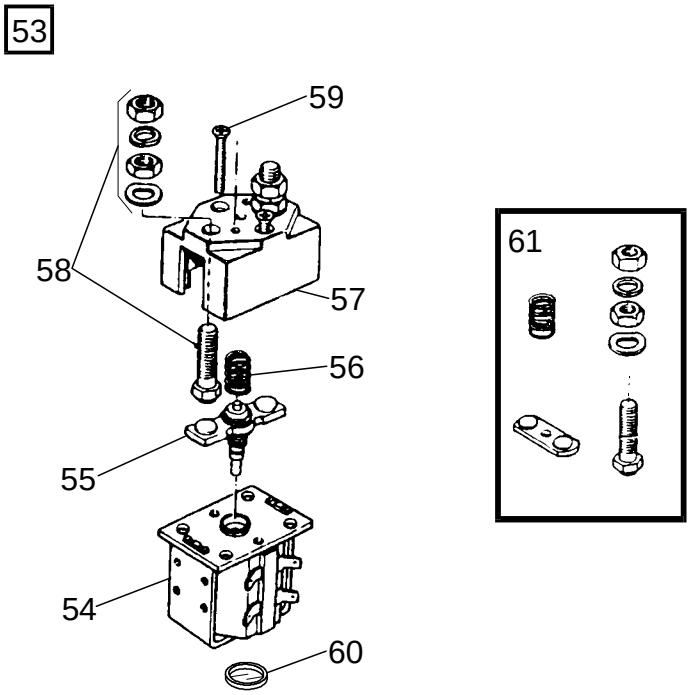

5610-015 Pump contactor

[2001-04-02]

Pumpkontaktor; Pumpenmotorkontaktor; Contacteur (moteur) de pompe

			680 7 PLL 24	410997 -
Pos	Description	Pcs	Part No	Note
53	Contactor Kontaktor; Kontaktor; Contacteur	1	154548	
54	Magnetic coil Magnetspole; Magnetspule; Bobine électrique	1	154554	
55	Contact Kontakt; Kontakt; Contact	1	154553	
56	Spring Fjäder; Feder; Ressort	1	154552	
57	Housing Kåpa; Haus; Chape	1	154550	
58	Fixed contact(Complete) Fast kontakt(Komplett); Fester Kontakt(Komplett); Contact fixé(Complet)	2	154551	
59	Screw Skruv; Schraube; Vis	2	154549	
60	Housing Kåpa; Haus; Chape	1	165416	
61	Contact set Kontaktsats; Kontaktsatz; Jeux de contact	1	169214	

© TOYOTA Industrial Equipment Europe SARL Ancenis, France

6100-062

P0011301

01

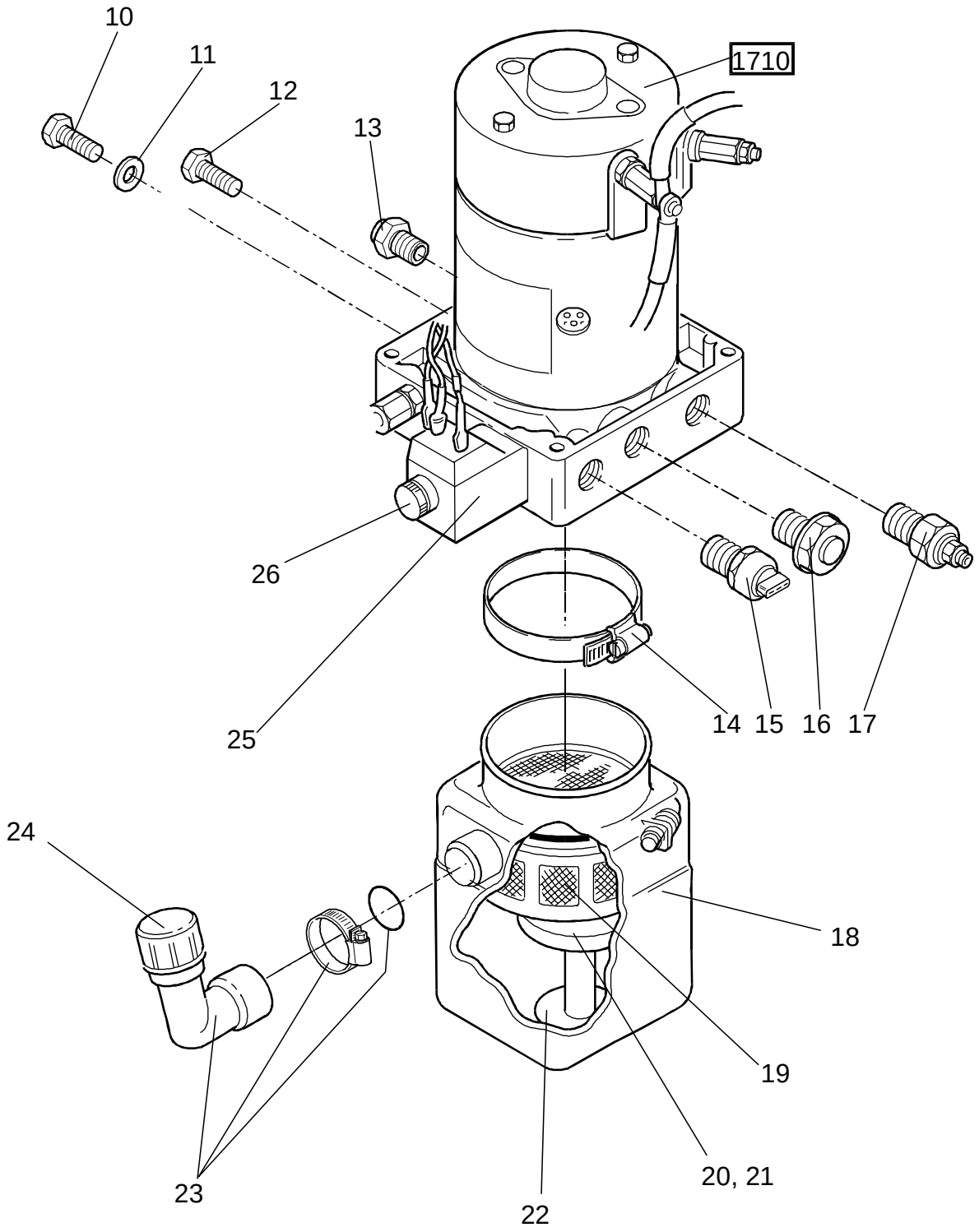

© TOYOTA Industrial Equipment Europe SARL Ancenis, France

6100-062 Hydraulic unit

[2001-04-02]

Hydraulaggregat; Hydraulikaggregat; Unité hydraulique

			680 7 PLL 24	410997 -
Pos	Description	Pcs	Part No	Note
10	Screw Skruv; Schraube; Vis	2	20460	
11	Washer Bricka; Scheibe; Rondelle	3	20404	
12	Screw Skruv; Schraube; Vis	1	20078	
13	Non return valve Backventil; Rückschlagklappe; Clapet de retenue	1	143374	
14	Clamp Klamma; Rohrschelle; Collier	1	143381	
15	Pressure transducer Tryckgivare; Druckgeber; Capteur de pression	1	171651	
16	Valve(Flow) Ventil(Flödes); Ventil(Fluss); Soupape(Flux)	1	143370	
17	Valve Ventil; Ventil; Soupape	1	143373	
18	Oil tank Oljebehållare; Ölbehälter; Reservoir d´huile	1	143379	
19	Filter Filter; Filter; Filtre	1	152716	
20	Pump Pump; Pump; Pumpe	1	143377	
21	Sealing kit Tätningssats; Dichtungsatz; Jeux d´étanchéite	1	143378	
22	Filter(Complete) Filter(Komplett); Filter(Komplett); Filtre(Complet)	1	167328	
23	Filler tube(Complete) Påfyllningsrör(Komplett); Füllstutzen(Komplett); Tuyau de remplissage(Complet)	1	167327	
24	Cap Lock; Deckel; Couvercle	1	143380	
25	Coil Spole; Spule; Bobine	1	143372	
26	Valve(Magnet) Ventil(Magnet); Ventil(Magnet); Soupape(Magnétique)	1	143371	

© TOYOTA Industrial Equipment Europe SARL Ancenis, France

6230-028

P0012389

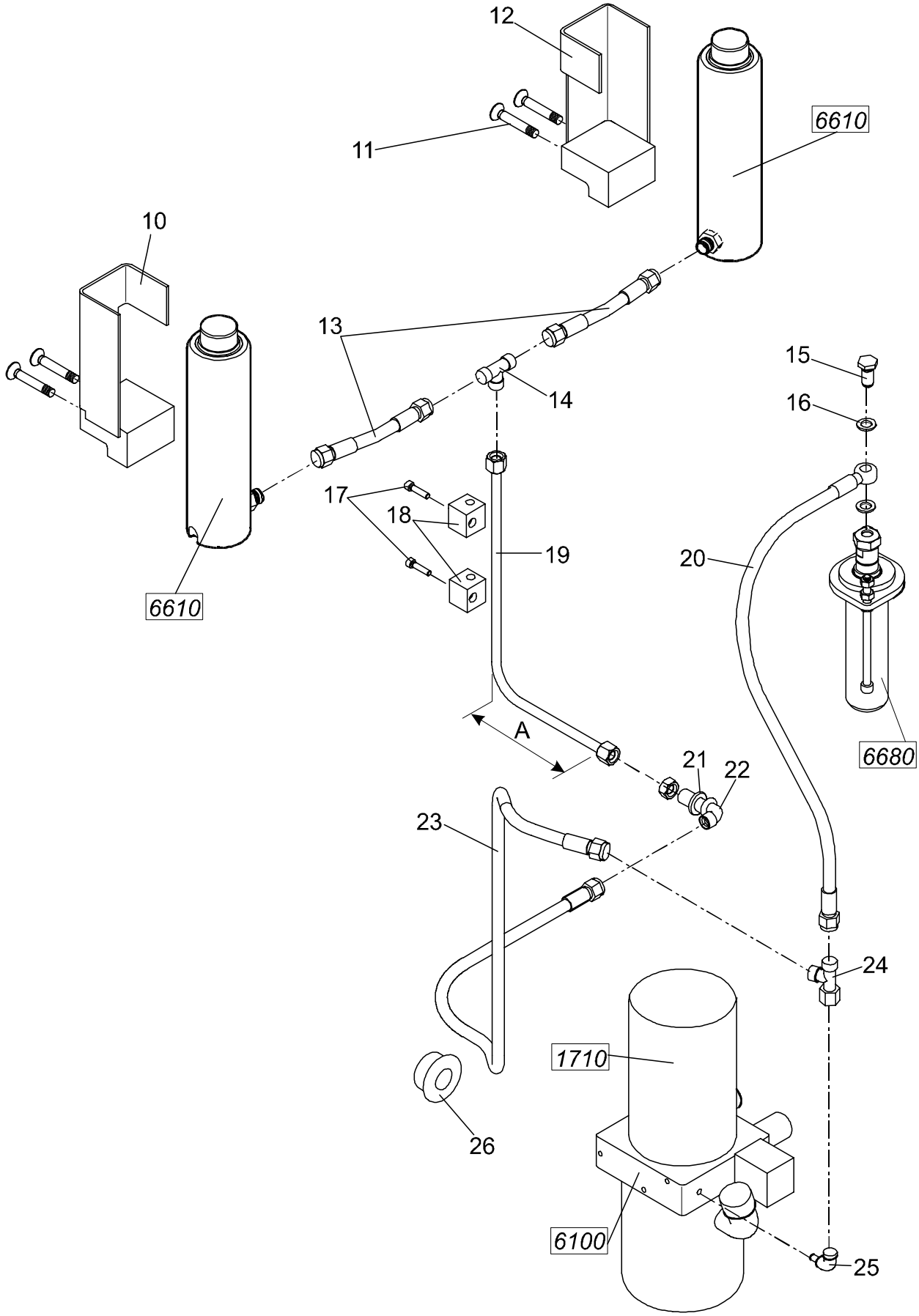

© TOYOTA Industrial Equipment Europe SARL Ancenis, France

6230-028 Hydraulic lines chassis

[2001-04-02]

Chassimonterade hydraulledningar; Hydraulikleitungen Chassis; Circuits hydrauliques châssis

			680 7 PLL 24	410997 -
Pos	Description	Pcs	Part No	Note
10	Support Stöd; Stütze; Appui	1	176498	
11	Screw Skruv; Schraube; Vis	4	21044	
12	Support Stöd; Stütze; Appui	1	176497	
13	Hose Slang; Schlauch; Tuyau flexible	2	172833	
14	Connection Koppling; Kupplung; Raccord	1	28777	
15	Hollow screw Hålskruv; Hohlschraube; Vis à torage	1	29661	
16	Sealing Tätning; Dichtung; Joint	2	23062	
17	Screw Skruv; Schraube; Vis	2	20224	
18	Clamp Klamma; Rohrschelle; Collier	2	21871	
19	Pipe Rör; Rohr; Tube	1	173233-001	A = 109 mm
19	Pipe Rör; Rohr; Tube	1	173233-002	A = 179 mm
20	Hose Slang; Schlauch; Tuyau flexible	1	170960	
21	Shim(1 mm) Shims; Schim; Cale	2	27225	
22	Connection Koppling; Kupplung; Raccord	1	28795	
23	Hose Slang; Schlauch; Tuyau flexible	1	173280	
24	Connection Koppling; Kupplung; Raccord	1	28944	
25	Connection Koppling; Kupplung; Raccord	1	28785	
26	Guide Genomföring; Durcgführung; Guide	1	143169	

© TOYOTA Industrial Equipment Europe SARL Ancenis, France

6610-037 **P0011354**

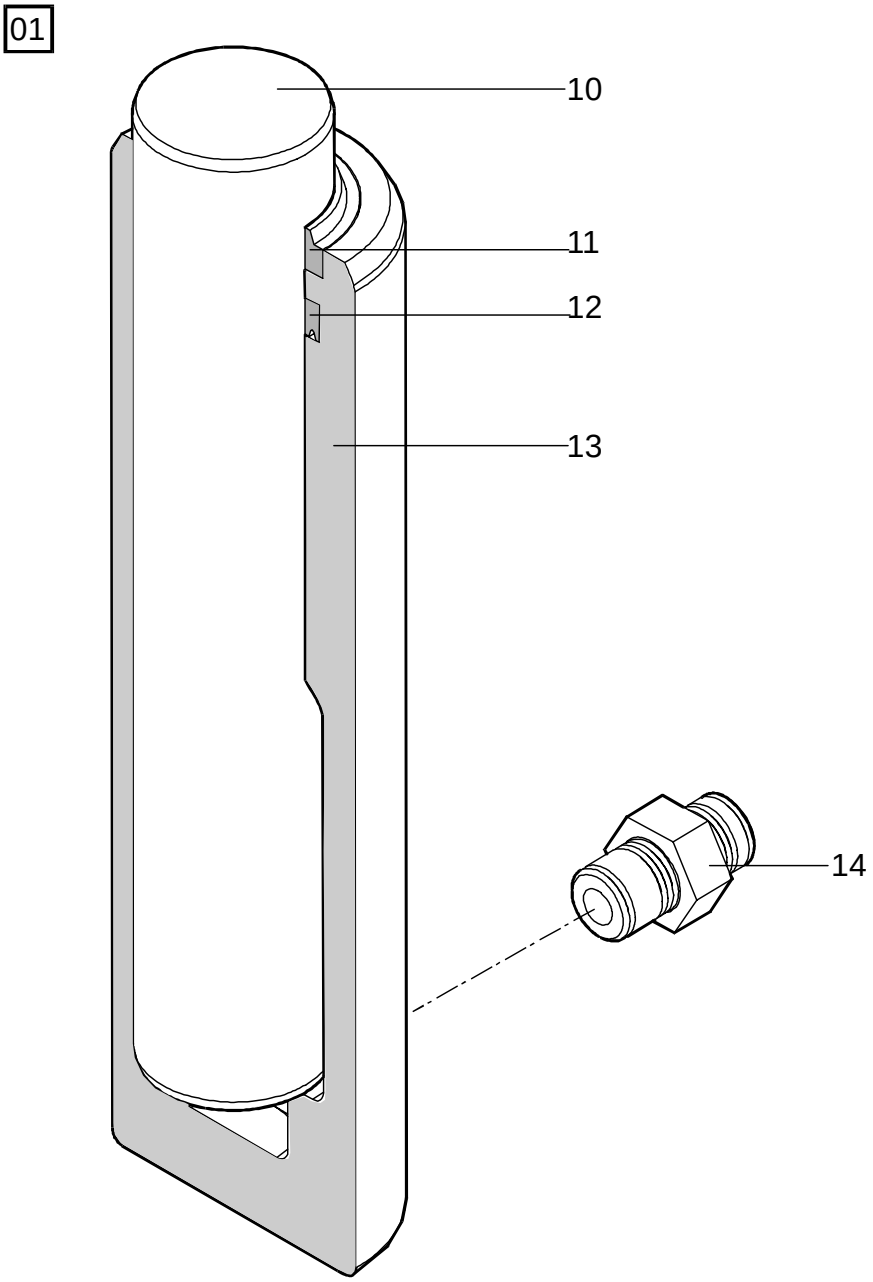

6610-037 Main lift cylinders

[2001-04-02]

Huvudlyftcylindrar; Haupthubzylinder; Vérin de levage, principal

			680 7 PLL 24	410997 -
Pos	Description	Pcs	Part No	Note
01	Cylinder compl. Cylinder kompl.; Zylinder kompl.; Verin compl.	2	160760	
10	Piston Kolv; Kolben; Piston	2	157900	
11	Scraper Avskrapare; Abkratzer; Segment racleur	2	20749	
12	Sealing Tätning; Dichtung; Joint	2	132771-002	
13	Cylinder pipe Cylinderrör; Zylinderrohr; Tube de cylindre	2	157898	
14	Connection Koppling; Kupplung; Raccord	2	28943	

© TOYOTA Industrial Equipment Europe SARL Ancenis, France

© TOYOTA Industrial Equipment Europe SARL Ancenis, France

6680-007

P0012337

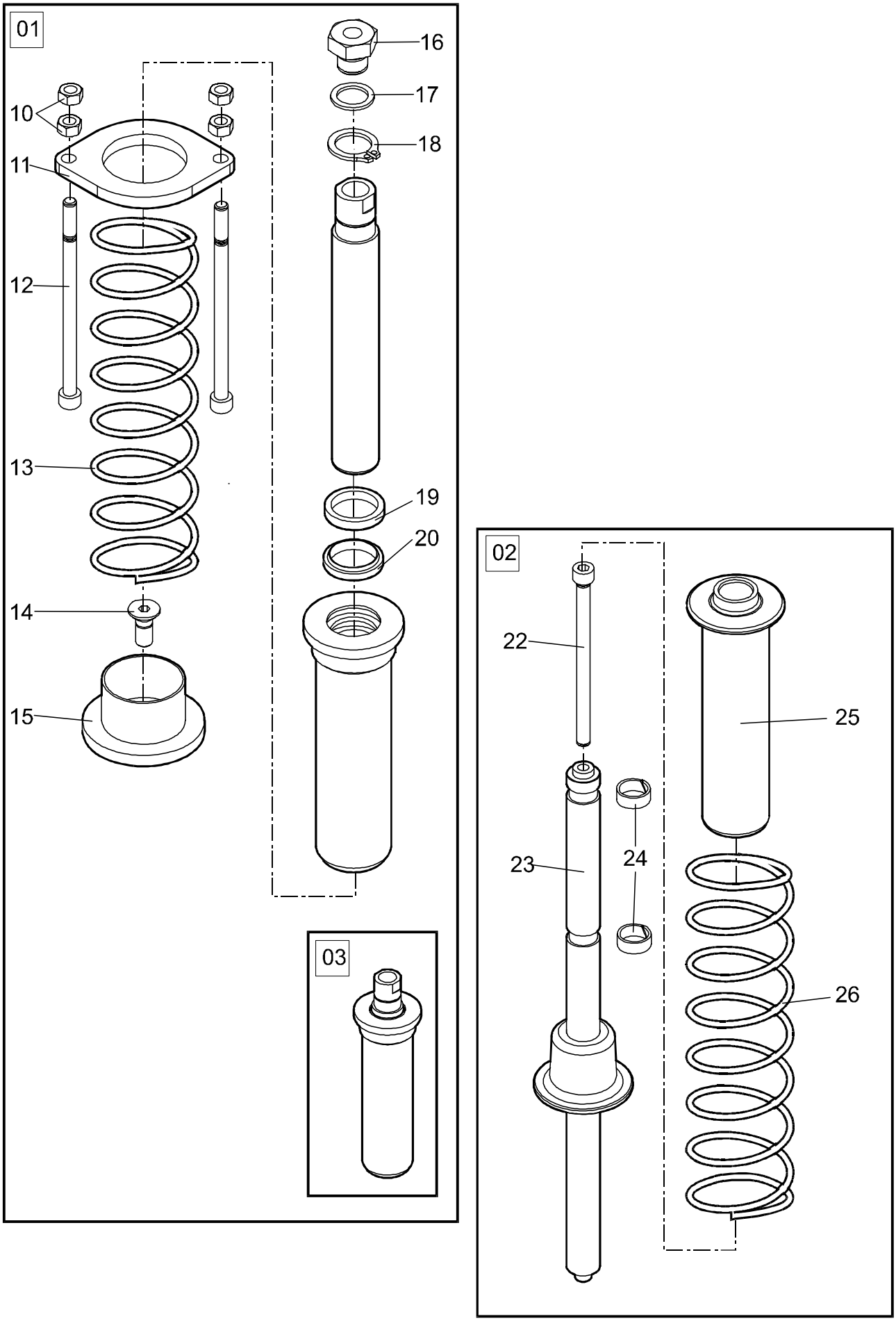

© TOYOTA Industrial Equipment Europe SARL Ancenis, France

6680-007 Powertrak cylinder

[2001-04-02]

Powertrak cylinder; Powertrak Zylinder; Vérin TGP (Traction Grande Puissance)

			680 7 PLL 24	410997 -
Pos	Description	Pcs	Part No	Note
01	Spring unit(Complete) Fjäderenhet(Komplett); Federeinheit(Komplett); Unite de ressort(Complet)	1	169920	Left Vänster; Links; Gauge
02	Spring unit(Complete) Fjäderenhet(Komplett); Federeinheit(Komplett); Unite de ressort(Complet)	1	173900	Right Höger; Recht; Droit
03	Cylinder compl. Cylinder kompl.; Zylinder kompl.; Verin compl.	1	174007	
10	Nut Mutter; Mutter; Ecrou	4	20081	
11	Stop lug Stoppklack; Anschlagsstück; Arréter	1	169919	
12	Screw Skruv; Schraube; Vis	2	28693	
13	Spring Fjäder; Feder; Ressort	1	169914	
14	Screw Skruv; Schraube; Vis	1	20128	
15	Stop bar Anslag; Anschlag; Arret	1	169918	
16	Nipple Nippel; Nippel; Nipple	1	172169	
17	Sealing ring Tätningsring; Dichtungsring; Bague d´étanchéité	1	20530	
18	Locking ring Spårring; Schliessring; Circlip	1	20630	
19	Scraper Avskrapare; Abkratzer; Segment racleur	1	172780	
20	Sealing Tätning; Dichtung; Joint	1	172779	
22	Screw Skruv; Schraube; Vis	1	174008	
23	Rod Stång; Stange; Tige	1	173902	
24	Guide ring Styrring; Steuerring; Anneau de guidage	2	172582	
25	Sleeve Hylsa; Hülse; Douille	1	173901	
26	Spring Fjäder; Feder; Ressort	1	157824	

© TOYOTA Industrial Equipment Europe SARL Ancenis, France

9420-015

P0012396

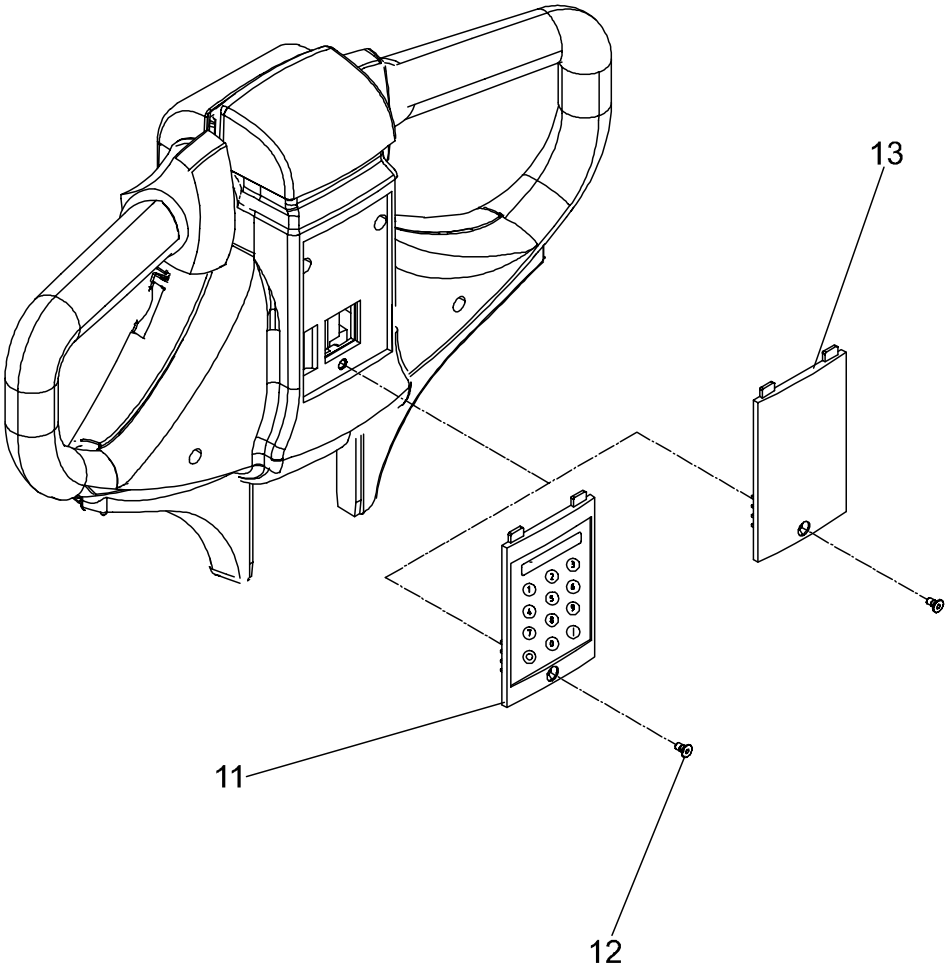

9420-015 Truck log device, code locking device

[2001-04-02]

Truck logg utrustn., kodlås; Truck Log System, Codesperre; Système Optigest, verrouillage (blocage) code

			680 7 PLL 24	410997 -
Pos	Description	Pcs	Part No	Note
11	Cap(Incl. keypad) Lock(Inkl. tangentbord); Deckel(Inkl. Tastatur); Couvercle(Incl. Tablette à clefs)	1	171660	
12	Screw Skruv; Schraube; Vis	1	171709	
13	Cap Lock; Deckel; Couvercle	1	171659	

© TOYOTA Industrial Equipment Europe SARL Ancenis, France

© TOYOTA Industrial Equipment Europe SARL Ancenis, France

9500-187

P0012407

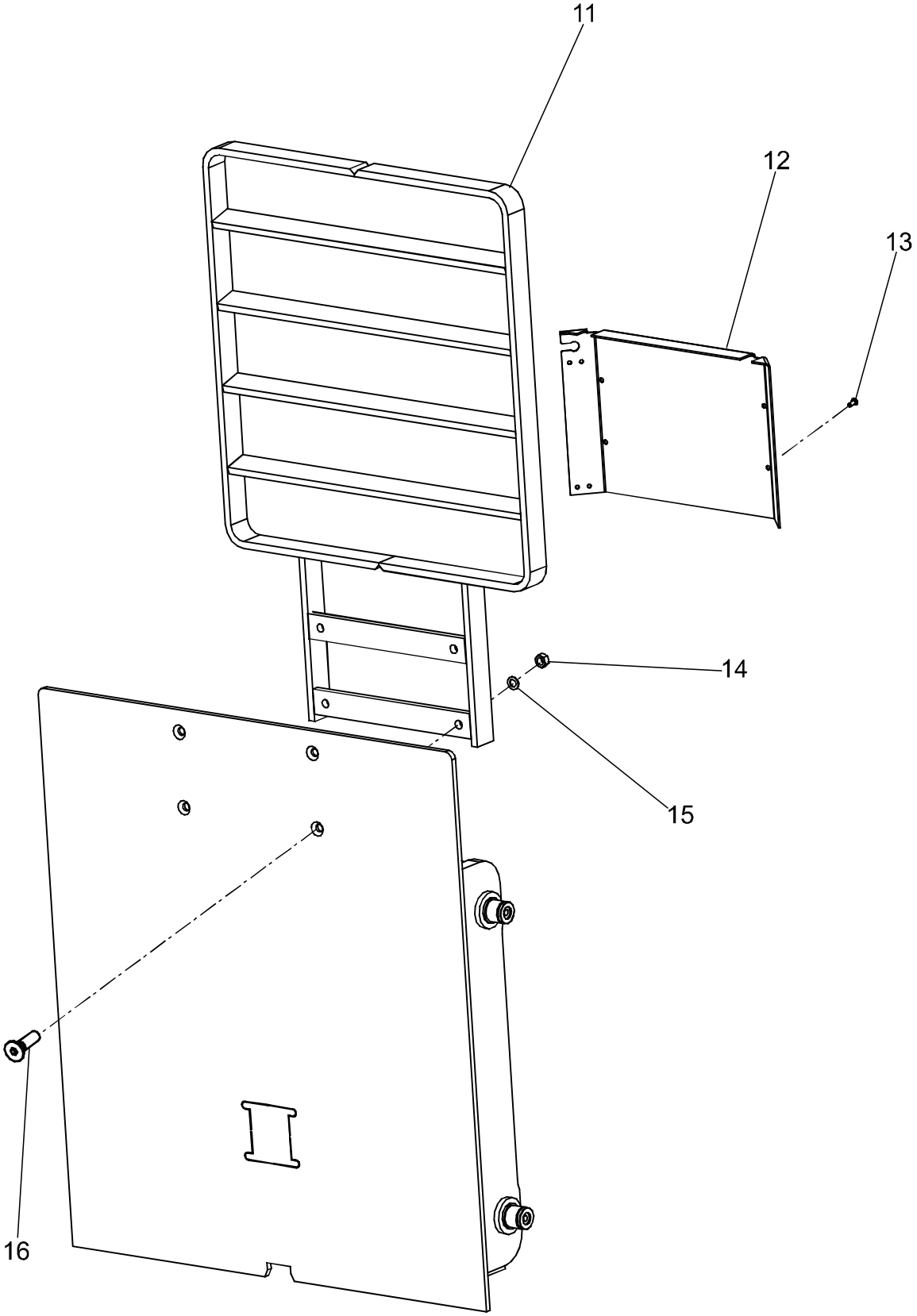

© TOYOTA Industrial Equipment Europe SARL Ancenis, France

9500-187 Other extra equipment

[2001-04-02]

Extra utrustning övrigt; Zusatzausrüstung Sonstiges; Autre équipement supplémentaire

Load support; Laststöd; Lastschutzgitter; Garde de charge			680 7 PLL 24	410997 -
Pos	Description	Pcs	Part No	Note
11	Load guard Laststöd; Lastschutzgitter; Garde de charge	1	177689-140	
12	Protection Skydd; Schutz; Protéege	1	177758	
13	Screw Skruv; Schraube; Vis	4	29968	
14	Nut Mutter; Mutter; Ecrou	4	20130	
15	Washer Bricka; Scheibe; Rondelle	4	20348	
16	Screw Skruv; Schraube; Vis	4	29514	

© TOYOTA Industrial Equipment Europe SARL Ancenis, France

9500-202

P0012404

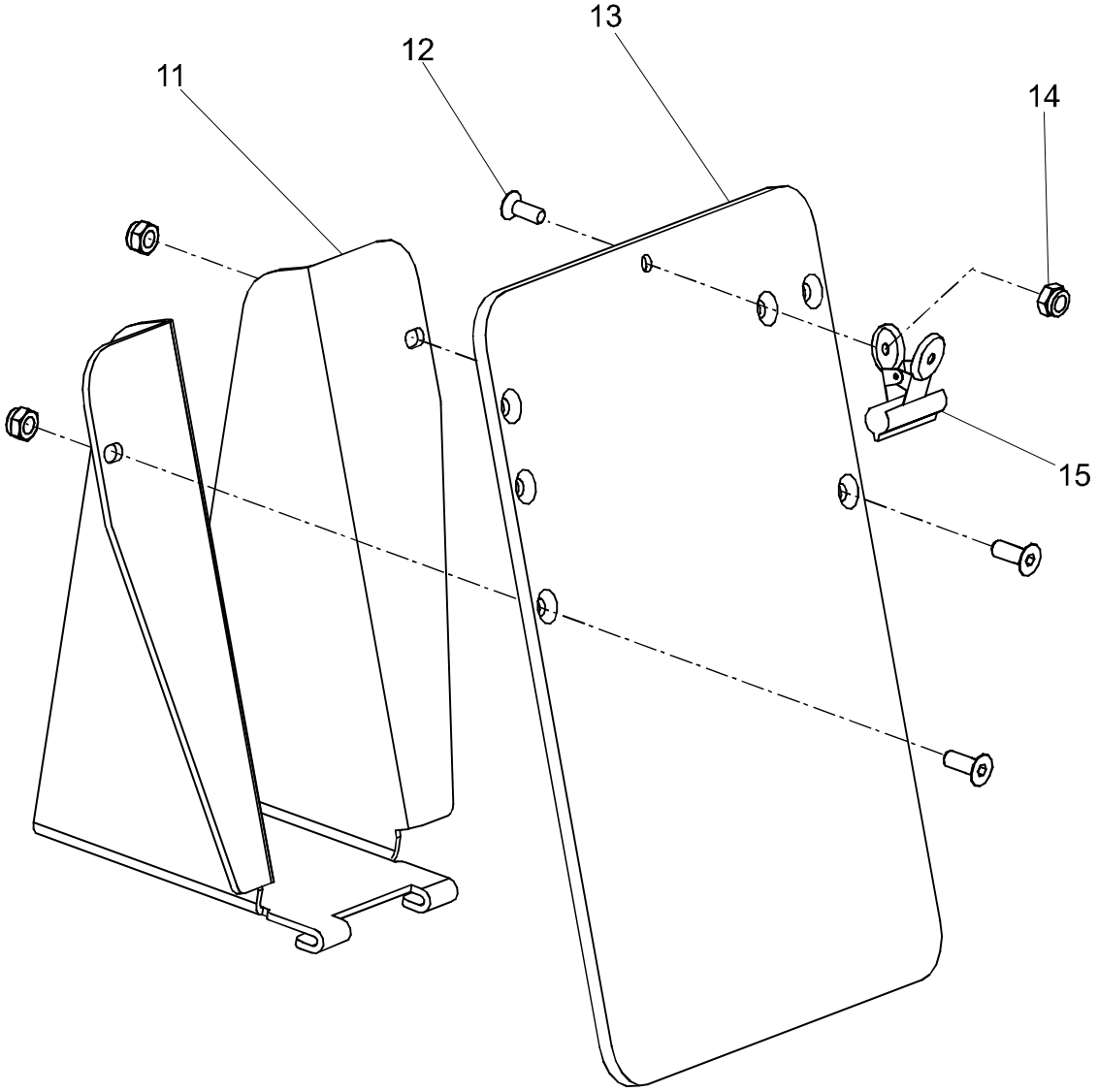

9500-202 Other extra equipment

[2001-04-02]

Extra utrustning övrigt; Zusatzausrüstung Sonstiges; Autre équipement supplémentaire

			680 7 PLL 24 410997 -	
Pos	Description	Pcs	Part No	Note
11	Bracket Fäste; Halterung; Support	1	175182	
12	Screw Skruv; Schraube; Vis	3	28264	
13	Plate Plåt; Platte; Plaque	1	176518	
14	Nut Mutter; Mutter; Ecrou	3	20433	
15	Clamp Klämma; Klammer; Pincer	1	175193	

© TOYOTA Industrial Equipment Europe SARL Ancenis, France

© TOYOTA Industrial Equipment Europe SARL Ancenis, France

9500-203

P0012421

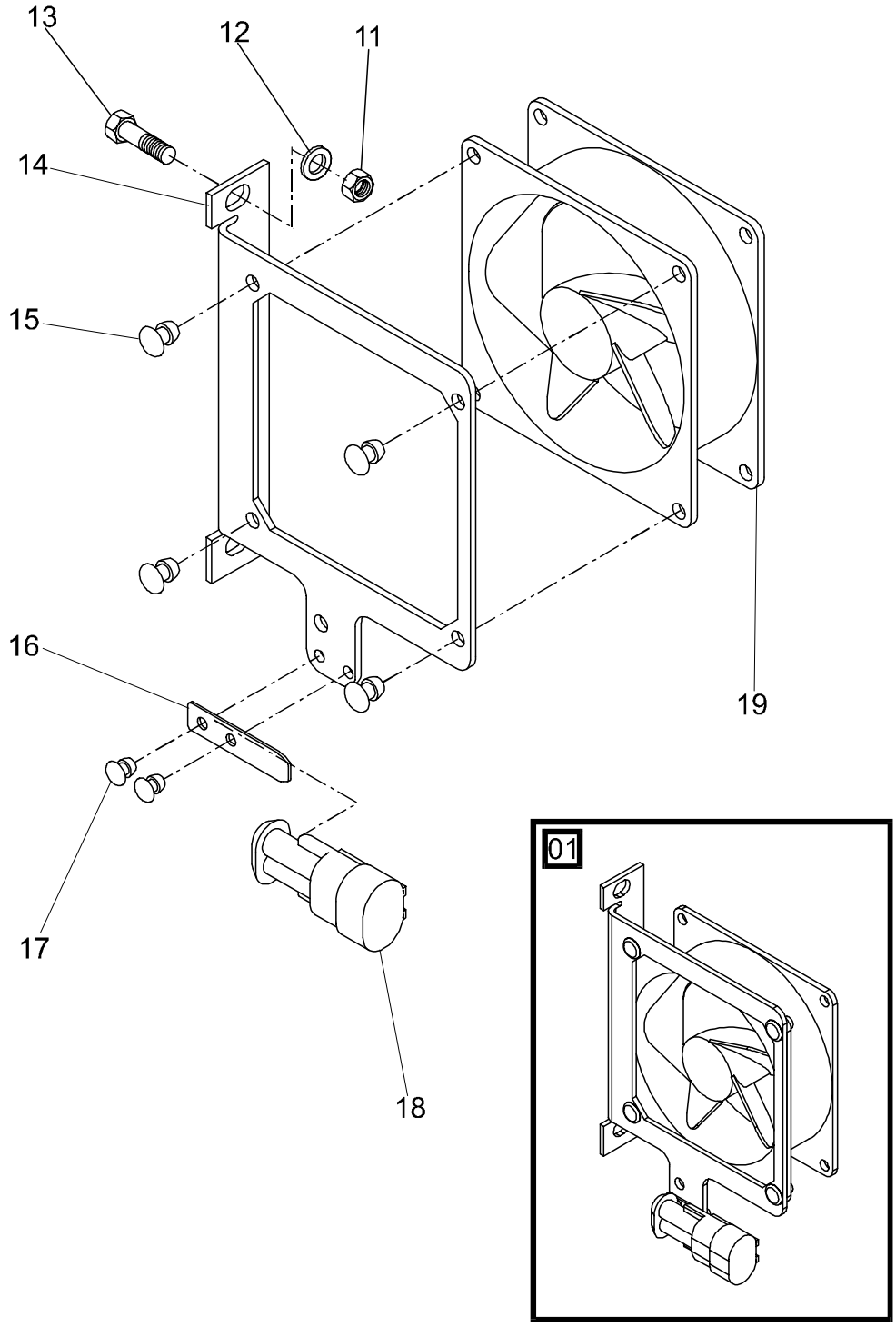

© TOYOTA Industrial Equipment Europe SARL Ancenis, France

9500-203 Other extra equipment

[2001-04-02]

Extra utrustning övrigt; Zusatzausrüstung Sonstiges; Autre équipement supplémentaire

			680 7 PLL 24	410997 -
Pos	Description	Pcs	Part No	Note
01	Fan(Complete) Fläkt(Komplett); Kühlgebläse(Komplett); Ventilateur(Complet)	1	177037	
11	Nut Mutter; Mutter; Ecrou	2	20433	
12	Washer Bricka; Scheibe; Rondelle	2	20375	
13	Screw Skruv; Schraube; Vis	2	29777	
14	Bracket Fäste; Halterung; Support	1	176860	
15	Nit Nit; Niet; Rivet	4	24664	
16	Bracket Fäste; Halterung; Support	1	169956	
17	Nit Nit; Niet; Rivet	2	21988	
18	Contact housing Kontakthus; Kontaktvorrichtung; Engrenage de mise en action	1	159221-002	
19	Fan Fläkt; Kühlgebläse; Ventilateur	1	143173	

© TOYOTA Industrial Equipment Europe SARL Ancenis, France

9550-013

P0012468

01

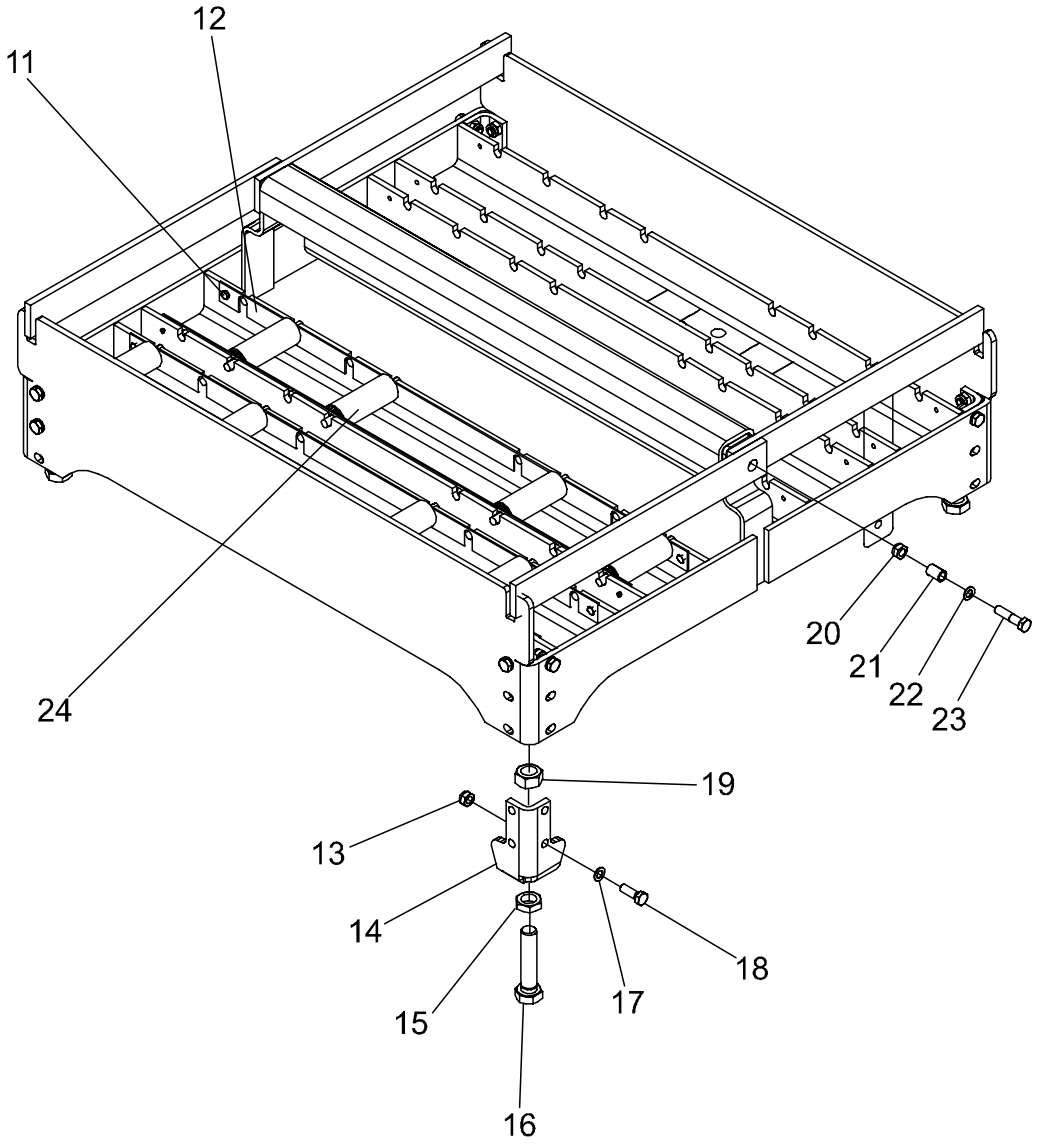

© TOYOTA Industrial Equipment Europe SARL Ancenis, France

9550-013 Battery changing equipment

[2001-04-02]

Batteribytesanordning; Batteriewechselvorrichtung; Equipement de changement batterie

			680 7 PLL 24	410997 -
Pos	Description	Pcs	Part No	Note
01	Battery changing equip. compl. Batteribytesanordning kompl.; Batteriewechselvorrichtung kompl.; Changer de batterie compl.	1	177910-001	
11	Screw Skruv; Schraube; Vis	16	29925	
12	Plate Plåt; Platte; Plaque	8	177938	
13	Nut Mutter; Mutter; Ecrou	12	20130	
14	Bracket Fäste; Halterung; Support	4	177984	
15	Nut Mutter; Mutter; Ecrou	4	20390	
16	Screw Skruv; Schraube; Vis	4	178417	
17	Washer Bricka; Scheibe; Rondelle	12	20348	
18	Screw Skruv; Schraube; Vis	12	20599	
19	Nut Mutter; Mutter; Ecrou	4	20160	
20	Nut Mutter; Mutter; Ecrou	2	20130	
21	Distance piece Distans; Distanz; Distance	2	177913	
22	Washer Bricka; Scheibe; Rondelle	2	20348	
23	Screw Skruv; Schraube; Vis	2	20654	
24	Roller(Complete) Rulle(Komplett); Rolle(Komplett); Roleau(Complet)	16	163259-013	

© TOYOTA Industrial Equipment Europe SARL Ancenis, France

© TOYOTA Industrial Equipment Europe SARL Ancenis, France

9999-007 P0013725

Information & Training Services

Opinion poll

As part of our ongoing work to improve BT documentation, we would value receiving your viewpoints

Ordering number of the book…….
Ordernummer på boken; Bestellnummer des Buches; Référence de commande du livre

Are you pleased with the contents of this book? ☐ ☐ ☐
Bokens innehåll; Der inhalt des Buches; La contenu du livre

Are you pleased with the pictures in the book? ☐ ☐ ☐
Bilderna i boken; Die bildes des Buches; Les images du livre

Was it easy to find the part number you needed? ☐ ☐ ☐
Lätt att hitta; Einfach zu finden; Facile de trouver

Comments:

I have found errors on the following pages…
Fel på sidan..; Der Fehler der Seite…; D'erreur de la page…

Page	Comments
Example *2860-042*	*Bad picture. I can't see what item 15 points at?*

Submitted by.....
Thanks for your assistance. Please fax your answer to:
BT Information & Training Services on +46 (0)142 865 37

9999-007 Information [2001-03-07]
Information; Information; Information

Pos	Description	Pcs	Part No	Note

© TOYOTA Industrial Equipment Europe SARL Ancenis, France