TOYOTA

Powered Pallet Truck
2 PM 18 / 2 PM 20 / 2 PM20N

Valid for machine number: 406404AT -

Only valid for machine number:

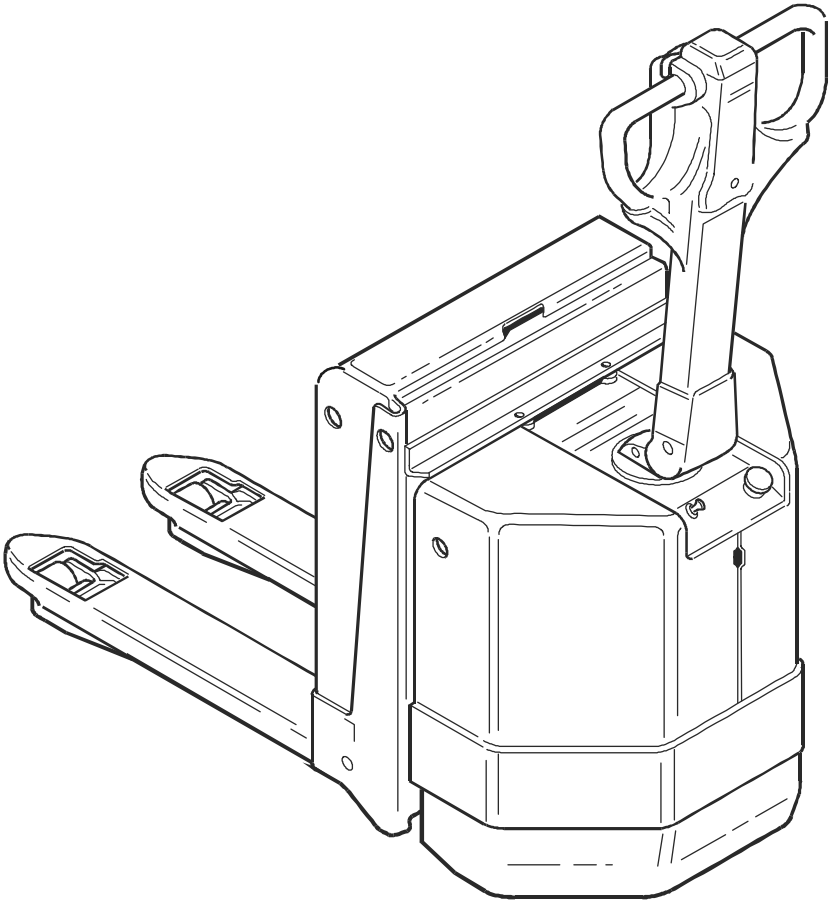

Spare Parts Catalogue

Ordering number 180672

Date 2001-03-27/ESIJ

© TOYOTA Industrial Equipment Europe SARL Ancenis, France

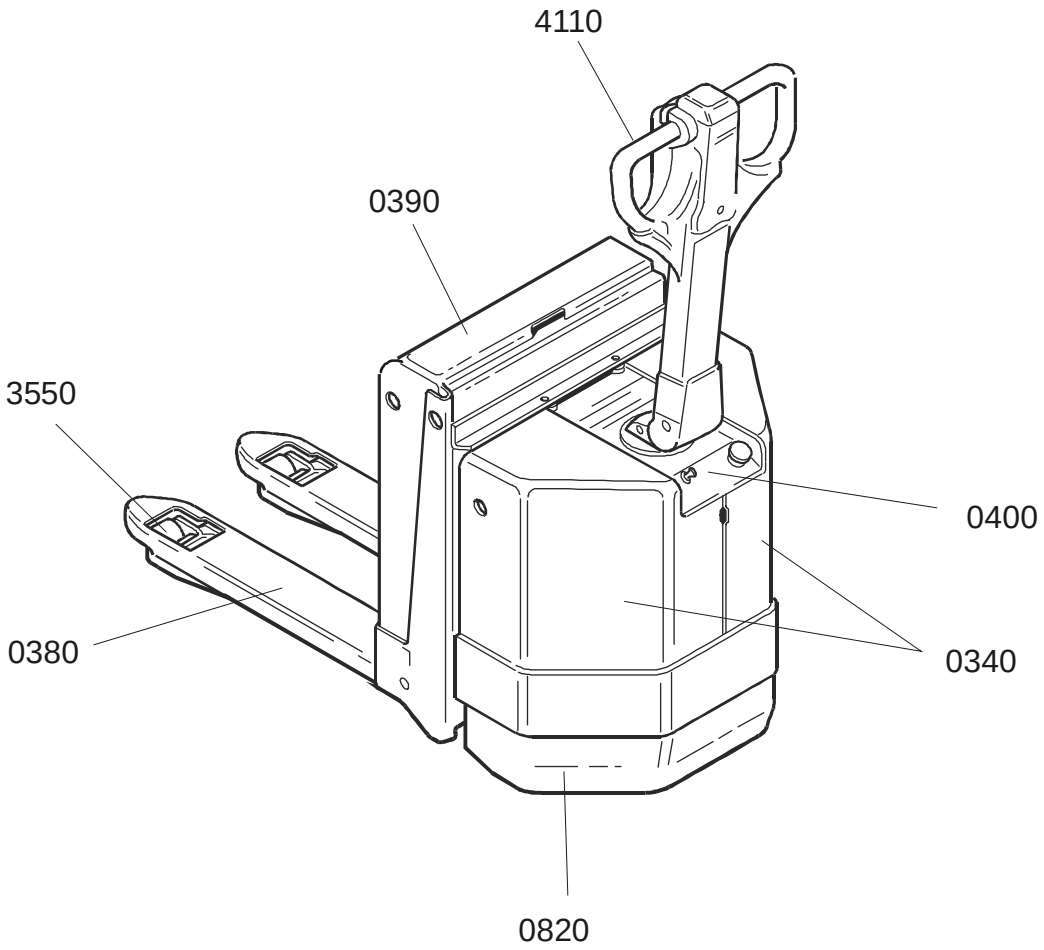

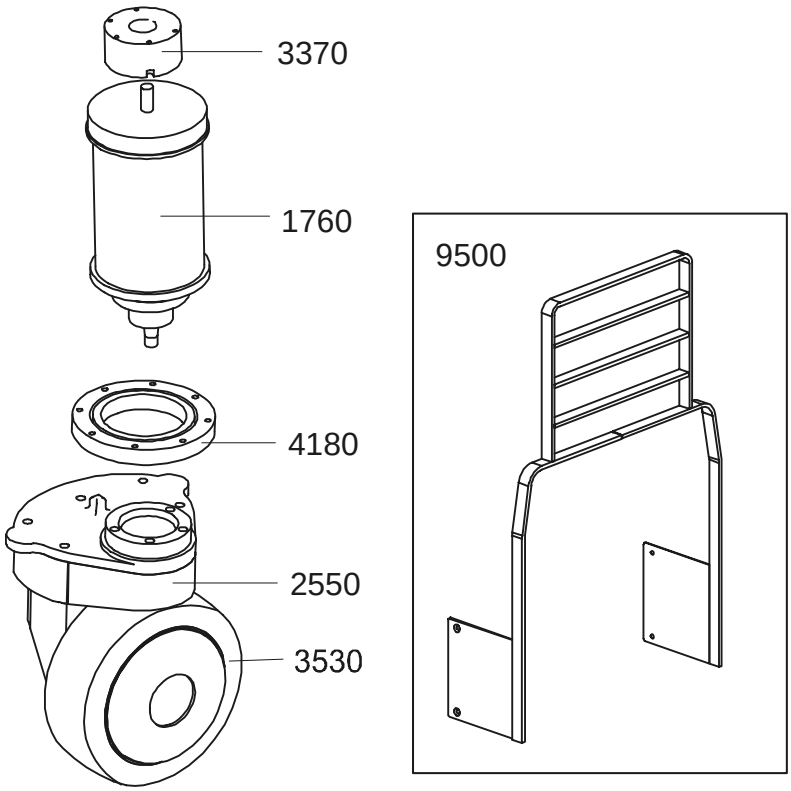

© TOYOTA Industrial Equipment Europe SARL Ancenis, France

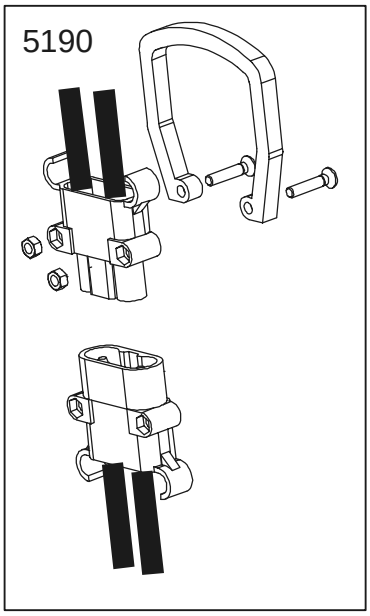

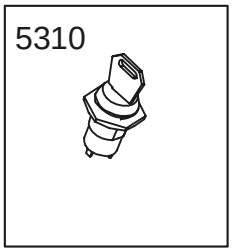

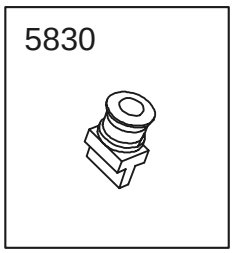

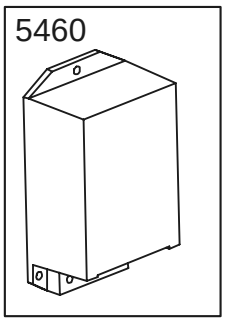

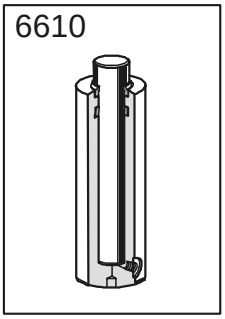

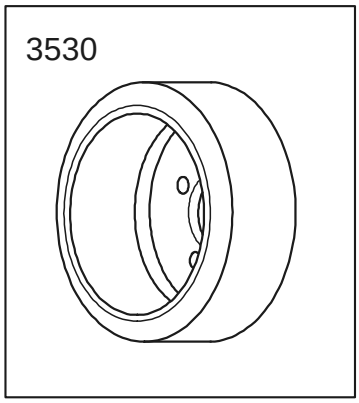

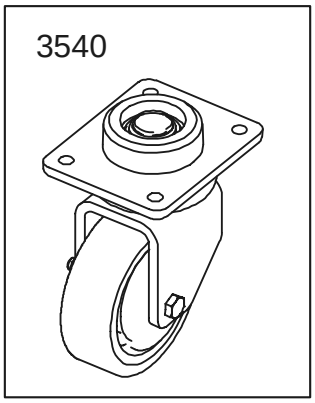

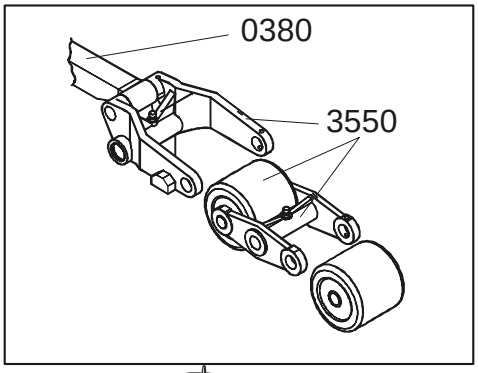

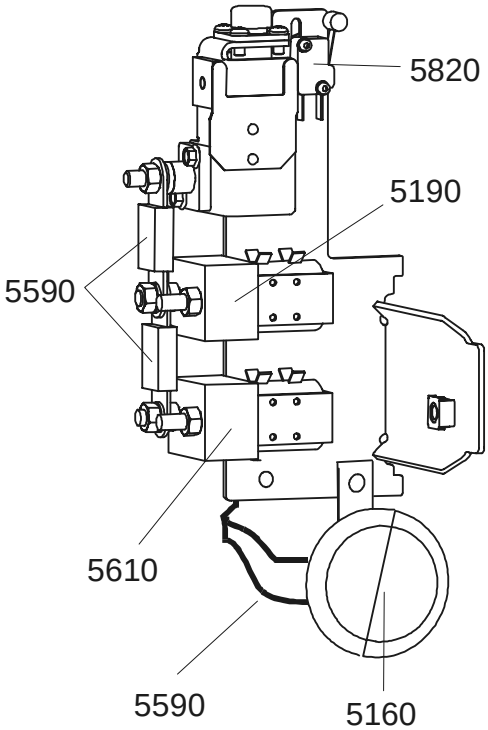

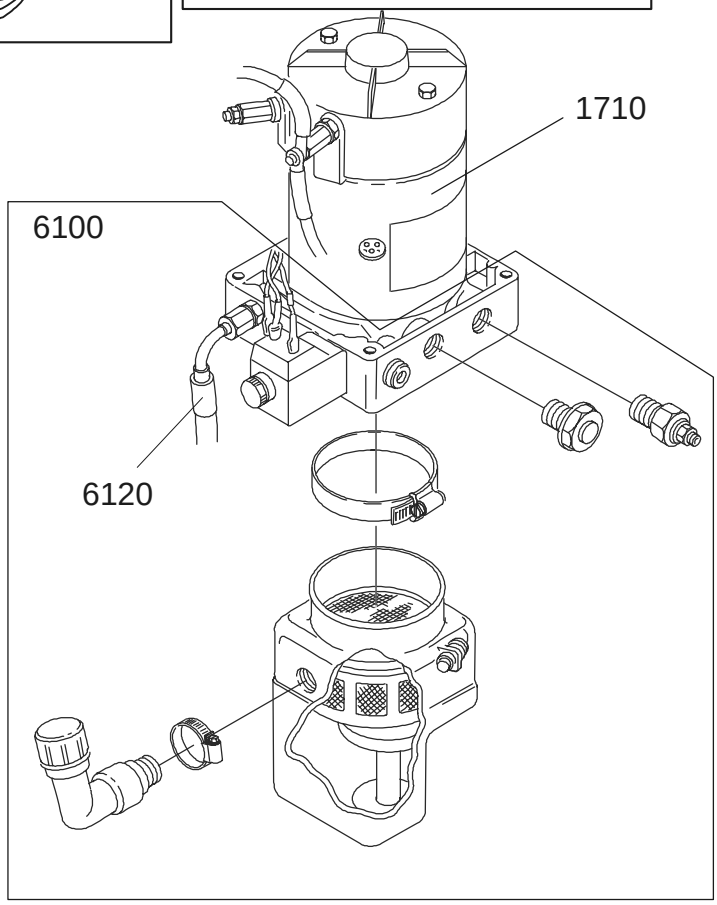

© TOYOTA Industrial Equipment Europe SARL Ancenis, France

0000 Chassis

Chassi; Chassis; Châssis

0340-197 Inspection covers
Huvar, luckor; Hauben, Abdeckungen; Capots, couvercles

0380-134 Fork frame (low lifters) e = 156 mm
Gaffelstomme (låglyftare); Gabelchassis (Niederhubwagen); Châssis (transpalettes)

0380-188 Fork frame (low lifters) e = 180 mm
Gaffelstomme (låglyftare); Gabelchassis (Niederhubwagen); Châssis (transpalettes)

0390-102 Battery compartment parts
Batteriutrymmesdelar; Batterieraumteile; Pièce de compartiment batterie

0390-112 Battery compartment parts
Batteriutrymmesdelar; Batterieraumteile; Pièce de compartiment batterie

0400-024 Frame/chassis components
Ram-monterade detaljer; Chassisanbauteile; Composants du châssis

0820-076 Finger/foot guards
Finger-/fotskydd; Finger-/ Fussschutz; Protection de doigts/pieds anti-écrasement

0850-157 Signs, warnings, decals
Skyltar, varningar, dekaler; Schilder, Warnzeichen, Aufkleber; Vignettes, avertissements, autocollants

1000 Motors

Motorer; Motoren; Moteurs

1710-016 Electric pump motor
Elektrisk pumpmotor; Elektro-Pumpenmotor; Moteur de pompe électrique

1710-017 Electric pump motor
Elektrisk pumpmotor; Elektro-Pumpenmotor; Moteur de pompe électrique

1760-015 Electric drive motor
Elektrisk åkmotor; Elektro-Fahrmotor; Moteur de traction électrique

1760-024 Electric drive motor
Elektrisk åkmotor; Elektro-Fahrmotor; Moteur de traction électrique

2000 Transmission/Drive gear

Kraftöverföring/Drivväxel; Kraftübertragung/Fahrgetriebe; Transmission/ Groupe de traction

2550-032 Mechanical drive gear unit
Drivaggregat/-växel; Antriebsaggregat/-getriebe; Groupe de traction, réducteur

© TOYOTA Industrial Equipment Europe SARL Ancenis, France

3000 Brake/Wheel/Caterpillar system

Broms-/Hjul/Bandsystem; Brems-/Rad-/Bandsystem; Freins/Roues/ Chenilles

3370-010 Electromagnetic parking brake
El-parkeringsbroms, magnetbroms; Elektro-Feststellbremse, Magnetbremse; Frein de stationnement électromagnétique

3530-026 Drive wheel
Drivhjul; Antriebsrad; Roue motrice

3540-032 Support/castor wheels
Stöd-/länkhjul; Stützräder/Gelenkrollen; Roues stabilisatrices/pivotantes

3550-094 Fork/support arm wheels **e = 156 mm**
Gaffel-/stödbenshjul; Gabel-/Stützarmrollen; Roues bras-support

3550-159 Fork/support arm wheels **e = 180 mm**
Gaffel-/stödbenshjul; Gabel-/Stützarmrollen; Roues bras-support

3570-061 Wheel locating points
Hjulinfästning/-upphängning; Radaufhängung; Point de fixation/suspension roues

4000 Steering system

Styrsystem; Steuer-/Lenksystem; Système de direction

4110-181 Steering arm / wheel / lever
Styr- arm/ratt/spak; Deichsel, Lenkrad-hebel; Timon/volant/levier de direction

4180-020 Steering bearings, radial bearing
Styrlagring/-krans ; Führungslagerung, Lenkkranz; Paliers de direction, paliers radials

© TOYOTA Industrial Equipment Europe SARL Ancenis, France

5000 Electrical system

Elektriskt system; Elektroanlage; Système électrique

5160-031 General alarm signals (audible/visual)
Signal/larm (ljud-/ljus-); Warn-/Alarmsignale (Aukust./Opt.); Avertisseur (sonore/lumineux), dispositifs dalarme'

5190-028 Battery cut out connector/contactor
Batterifrånskiljare, huvudkontaktor; Batterietrennung, Hauptkontaktor; Coupe-circuit de batterie, contacteur

5190-029 Battery cut out connector/contactor
Batterifrånskiljare, huvudkontaktor; Batterietrennung, Hauptkontaktor; Coupe-circuit de batterie, contacteur

5190-039 Battery cut out connector/contactor
Batterifrånskiljare, huvudkontaktor; Batterietrennung, Hauptkontaktor; Coupe-circuit de batterie, contacteur

5310-045 Start/stop switch
Start/stoppströmställare; Schalter Fahren/Anhalten; Interrupteur (coupe-circuit) démarrage/arrêt

5460-032 Transistor panel
Transistorpanel ; Transistorpanel; Panneau transistor

5590-033 Work function harnesses/ fuse
Arbetsfunktionskablage/ -säkring; Steurstromverkabelung/ -Sicherung; Câblage/ fusible fonction de travail

5610-014 Pump contactor
Pumpkontaktor; Pumpenmotorkontaktor; Contacteur (moteur) de pompe

5820-018 Lift/lowering/reach movment probes/sensors
Lyft-/sänk-/skjutrörelse-givare/-sensor; Hub-/Senk-/Schubgeber/-sensor; Capteurs de levage/ descente/rétraction

5820-019 Lift/lowering/reach movment probes/sensors Cold stores
Lyft-/sänk-/skjutrörelse-givare/-sensor; Hub-/Senk-/Schubgeber/-sensor; Capteurs de levage/ descente/rétraction

5830-043 Safety probes/ sensors
Säkerhets-givare/-sensorer; Sicherheitsgeber/-sensor; Capteurs de sécurité

© TOYOTA Industrial Equipment Europe SARL Ancenis, France

6000 Hydraulic/pneumatic system

Hydraulik/pneumatik; Hydraulikanlage/Pneumatik; Système hydraulique/pneumatique

6100-059 Hydraulic unit
Hydraulaggregat; Hydraulikaggregat; Unité hydraulique

6100-060 Hydraulic unit
Hydraulaggregat; Hydraulikaggregat; Unité hydraulique

6120-165 Hydraulic tank lines
Tankhydraulledningar; Hydrauliktankleitungen; Tuyaux réservoir hydraulique

6120-166 Hydraulic tank lines
Tankhydraulledningar; Hydrauliktankleitungen; Tuyaux réservoir hydraulique

6610-036 Main lift cylinders
Huvudlyftcylindrar; Haupthubzylinder; Vérin de levage, principal

9000 Options/attachments

Tillbehör/extrautrustning; Zubehör /Zusatzausrüstung; Equipement supplémentaire/Options

9400-054 Extra electrical equipment
Extra elektrisk utrustning; Elektrische Zusatzausrüstung ; Equipement électrique supplémentaire

9400-055 Extra electrical equipment **Only UK**
Extra elektrisk utrustning; Elektrische Zusatzausrüstung ; Equipement électrique supplémentaire

9420-015 Truck log device, code locking device
Truck logg utrustn., kodlås; Truck Log System, Codesperre; Système Optigest, verrouillage (blocage) code

9500-206 Other extra equipment **Load support**
Extra utrustning övrigt; Zusatzausrüstung Sonstiges; Autre équipement supplémentaire

9500-208 Other extra equipment **Writing table**
Extra utrustning övrigt; Zusatzausrüstung Sonstiges; Autre équipement supplémentaire

9500-219 Other extra equipment **Load support**
Extra utrustning övrigt; Zusatzausrüstung Sonstiges; Autre équipement supplémentaire

9550-014 Battery changing equipment
Batteribytesanordning; Batteriewechselvorrichtung; Equipement de changement batterie

© TOYOTA Industrial Equipment Europe SARL Ancenis, France

0340-197

P0013095

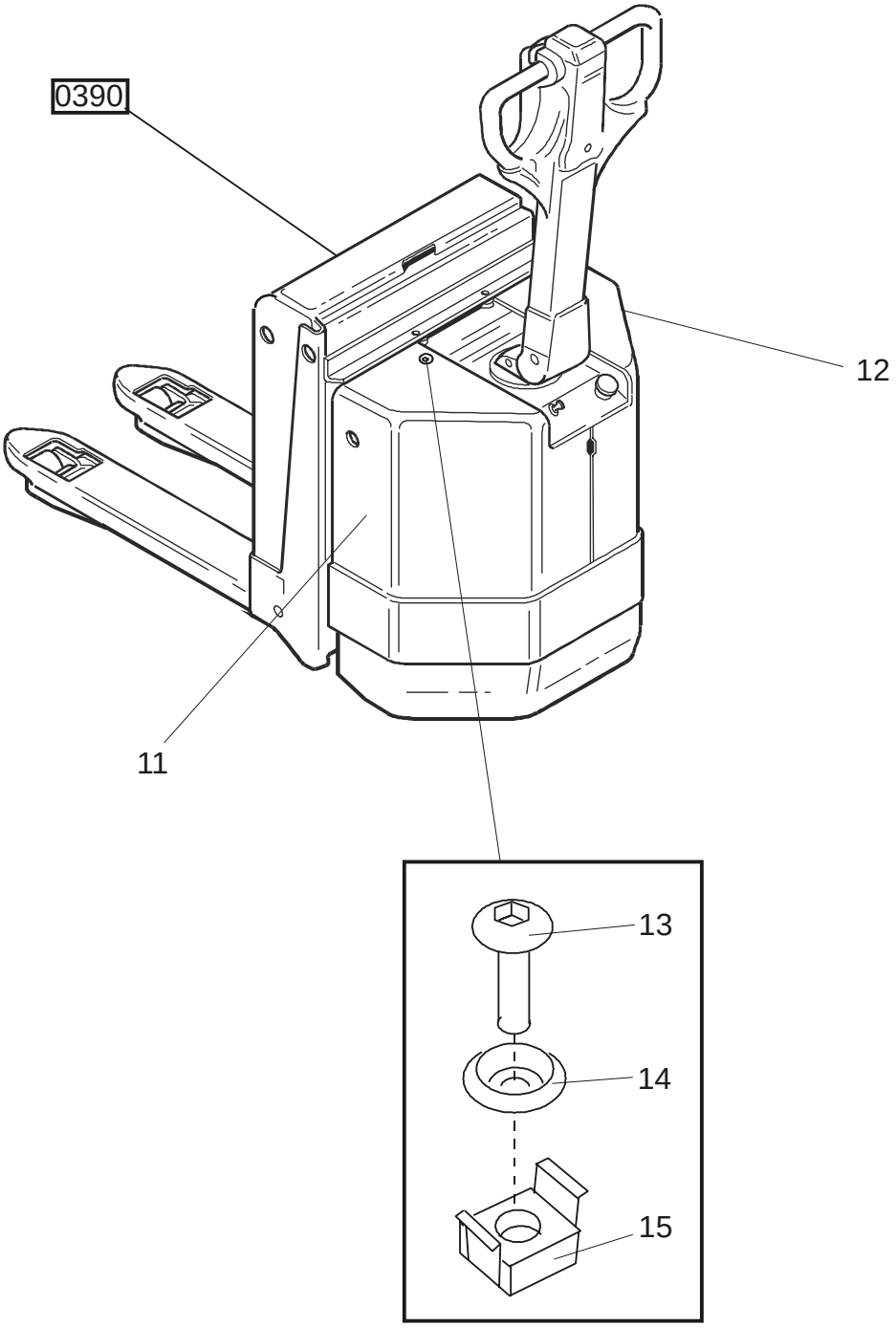

© TOYOTA Industrial Equipment Europe SARL Ancenis, France

0340-197 Inspection covers

[2000-11-07]

Huvar, luckor; Hauben, Abdeckungen; Capots, couvercles

			677 2 PM 18 678 2 PM 20 678 2 PM20N	364690 - 364690 - 364690 -
Pos	Description	Pcs	Part No	Note
11	Cover(Orange) Huv; Haube; Capot	1	172999-031	
12	Cover(Orange) Huv; Haube; Capot	1	172998-031	
13	Screw Skruv; Schraube; Vis	2	174892	
14	Washer Bricka; Scheibe; Rondelle	2	174893	
15	Nut Mutter; Mutter; Ecrou	2	28931	

© TOYOTA Industrial Equipment Europe SARL Ancenis, France

0380-134

P0011364

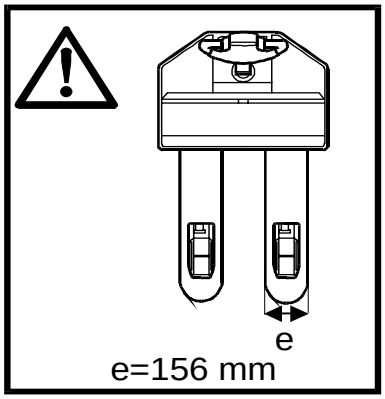

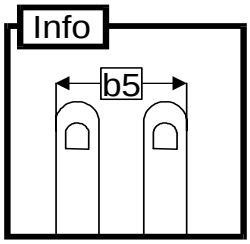

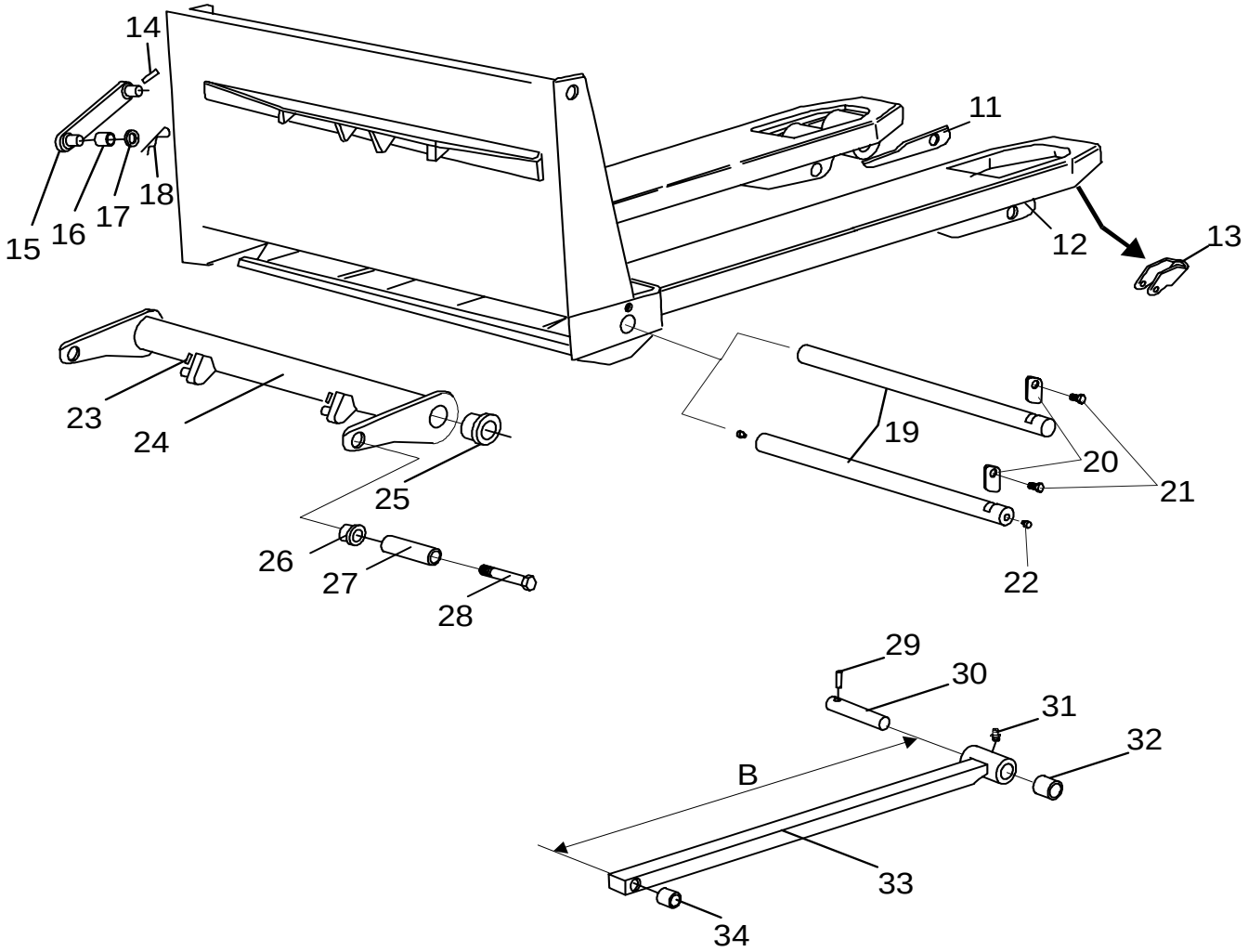

© TOYOTA Industrial Equipment Europe SARL Ancenis, France

0380-134 Fork frame (low lifters) [2001-02-08]

Gaffelstomme (låglyftare); Gabelchassis (Niederhubwagen); Châssis (transpalettes)

e = 156 mm	677 2 PM 18 364690 - 678 2 PM20N 364690 -

Pos	Description	Pcs	Part No	Note
11	Ear Öra; Halter; Etrier	2	138209	
12	Ear Öra; Halter; Etrier	2	138210	
13	Bracket Fäste; Halterung; Support	2	47110	
14	Locking pin Spännstift; Spannstift; Goupille	2	20014	
15	Link Länk; Gelenk; Bras	2	109319	
16	Bush Bussning; Bague; Bague	4	140173	
17	Washer Bricka; Scheibe; Rondelle	4	20013	
18	Split pin Hårnålssprint; Splint; Goupiller	2	28925	
19	Axle Axel; Achse; Axe	1	172644	
20	Bracket Fäste; Halterung; Support	1	152111	
21	Screw Skruv; Schraube; Vis	1	29768	
22	Greasing nipple Smörjnippel; Smiernippel; Graisseur	2	22410	
23	Cotter pin Saxpinne; Gespalter stift; Goupille fendue	2	20313	
24	Torsion tube compl Vridrör kompl; Drehrohr Kompl; Levier de tringle compl	1	171941-001	b5=450 mm
24	Torsion tube compl Vridrör kompl; Drehrohr Kompl; Levier de tringle compl	1	171941-002	b5=520 mm
24	Torsion tube compl Vridrör kompl; Drehrohr Kompl; Levier de tringle compl	1	171941-003	b5=550 mm
24	Torsion tube compl Vridrör kompl; Drehrohr Kompl; Levier de tringle compl	1	171941-004	b5=570 mm
24	Torsion tube compl Vridrör kompl; Drehrohr Kompl; Levier de tringle compl	1	171941-005	b5=685 mm
24	Torsion tube compl Vridrör kompl; Drehrohr Kompl; Levier de tringle compl	1	171941-006	b5=400 mm
24	Torsion tube compl Vridrör kompl; Drehrohr Kompl; Levier de tringle compl	1	171941-007	b5=580 mm
24	Torsion tube compl Vridrör kompl; Drehrohr Kompl; Levier de tringle compl	1	171941-008	b5=650 mm
24	Torsion tube(b5=536 mm) Vridrör; Drehrohrl; Levier de tringlel	1	171941-009	
25	Bush Bussning; Bague; Bague	2	169807	
26	Bush Bussning; Bague; Bague	2	140173	
27	Axle Axel; Achse; Axe	2	134521	
28	Screw Skruv; Schraube; Vis	2	29522	
29	Locking pin Spännstift; Spannstift; Goupille	2	20001	
30	Axle Axel; Achse; Axe	2	126131	
30	Axle(Stainless Steel) Axel(Rostfri); Achse(Nichtrostende); Axe(Inoxydable)	2	128507	
31	Greasing nipple Smörjnippel; Smiernippel; Graisseur	4	27662	

© TOYOTA Industrial Equipment Europe SARL Ancenis, France

Pos	Description	Pcs	Part No	Note
32	Bush Bussning; Bague; Bague	2	140172	
33	Push rod(B = 616) Tryckstång; Druckstange; Tringle	2	136846-081	
33	Push rod(B = 716) Tryckstång; Druckstange; Tringle	2	136846-091	
33	Push rod(B = 736) Tryckstång; Druckstange; Tringle	2	136846-096	
33	Push rod(B = 771) Tryckstång; Druckstange; Tringle	2	136846-100	
33	Push rod(B = 926) Tryckstång; Druckstange; Tringle	2	136846-112	
33	Push rod(B = 956) Tryckstång; Druckstange; Tringle	2	136846-115	
33	Push rod(B = 971) Tryckstång; Druckstange; Tringle	2	136846-120	
33	Push rod(B = 1026) Tryckstång; Druckstange; Tringle	2	136846-122	
33	Push rod(B = 1176) Tryckstång; Druckstange; Tringle	2	136846-137	
33	Push rod(B = 1256) Tryckstång; Druckstange; Tringle	2	136846-145	
33	Push rod(B = 1326) Tryckstång; Druckstange; Tringle	2	136846-152	
34	Bush Bussning; Bague; Bague	2	140168	

© TOYOTA Industrial Equipment Europe SARL Ancenis, France

© TOYOTA Industrial Equipment Europe SARL Ancenis, France

0380-188

P0012399

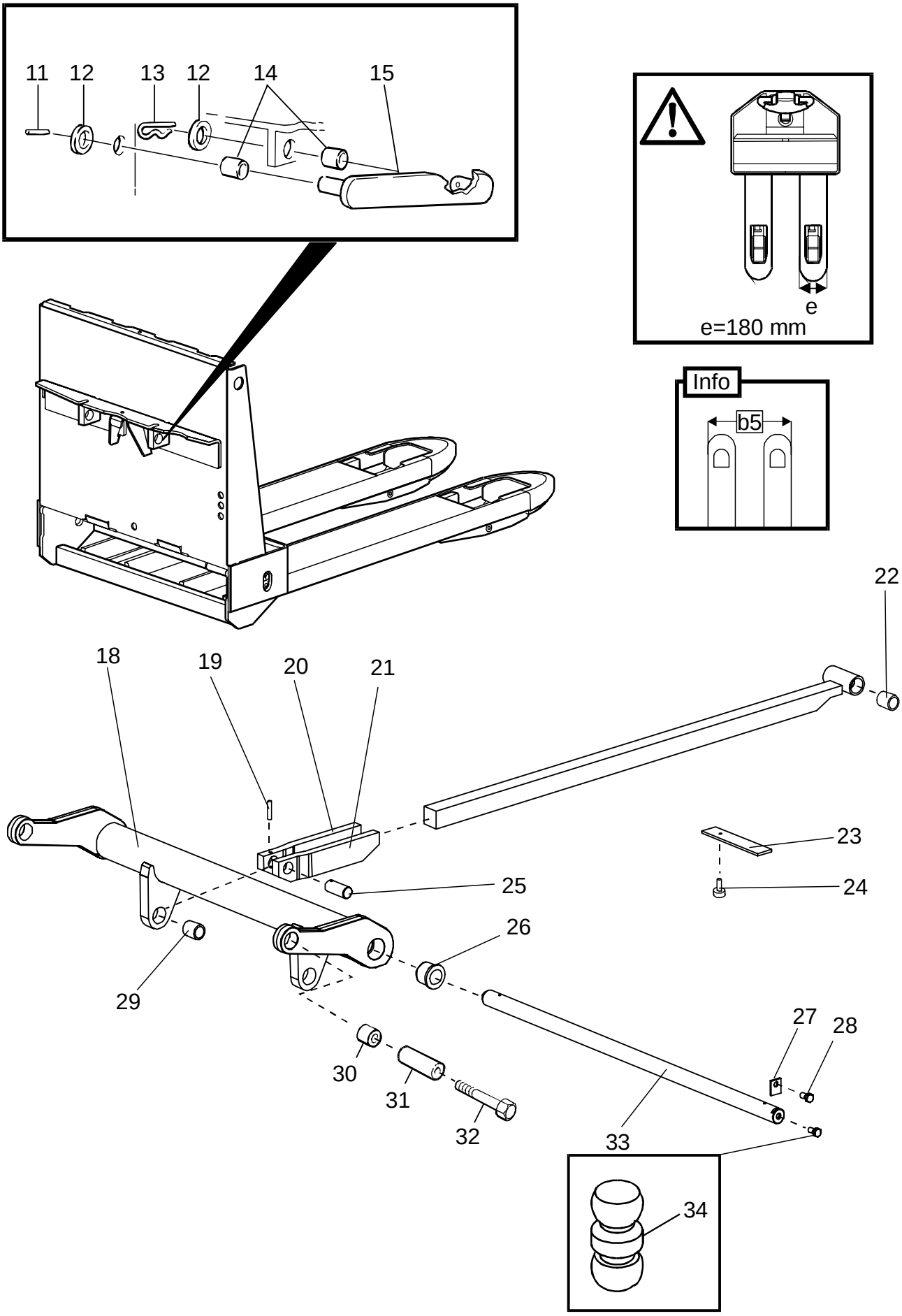

© TOYOTA Industrial Equipment Europe SARL Ancenis, France

0380-188 Fork frame (low lifters) [2001-02-08]

Gaffelstomme (låglyftare); Gabelchassis (Niederhubwagen); Châssis (transpalettes)

e = 180 mm			678 2 PM 20 364690 -	
Pos	Description	Pcs	Part No	Note
11	Locking pin Spännstift; Spannstift; Goupille	2	20014	
12	Washer Bricka; Scheibe; Rondelle	4	20013	
13	Split pin Hårnålssprint; Splint; Goupiller	2	28925	
14	Bush Bussning; Bague; Bague	4	140173	
15	Link Länk; Gelenk; Bras	2	109319	
18	Torsion tube(b5=450 mm) Vridrör; Drehrohrl; Levier de tringlel	1	176890-001	
18	Torsion tube(b5=520 mm) Vridrör; Drehrohrl; Levier de tringlel	1	176890-002	
18	Torsion tube(b5=550 mm) Vridrör; Drehrohrl; Levier de tringlel	1	176890-003	
18	Torsion tube(b5=570 mm) Vridrör; Drehrohrl; Levier de tringlel	1	176890-004	
18	Torsion tube(b5=685 mm) Vridrör; Drehrohrl; Levier de tringlel	1	176890-005	
18	Torsion tube(b5=400 mm) Vridrör; Drehrohrl; Levier de tringlel	1	176890-006	
18	Torsion tube(b5=580 mm) Vridrör; Drehrohrl; Levier de tringlel	1	176890-007	
18	Torsion tube(b5=650 mm) Vridrör; Drehrohrl; Levier de tringlel	1	176890-008	
18	Torsion tube(b5=536 mm) Vridrör; Drehrohrl; Levier de tringlel	1	176890-009	
19	Locking pin Spännstift; Spannstift; Goupille	2	22128	
20	Link Länk; Gelenk; Bras	2	130587	
21	Link Länk; Gelenk; Bras	2	130586	
22	Bush Bussning; Bague; Bague	4	140169	
23	Support Stöd; Stütze; Appui	2	136267	
24	Screw Skruv; Schraube; Vis	2	22229	
25	Axle(Stainless Steel) Axel(Rostfri); Achse(Nichtrostende); Axe(Inoxydable)	2	130590	
25	Axle Axel; Achse; Axe	2	132005	
26	Bush Bussning; Bague; Bague	2	169807	
27	Bracket Fäste; Halterung; Support	1	152111	
28	Screw Skruv; Schraube; Vis	1	29768	
29	Bush Bussning; Bague; Bague	2	140170	
30	Bush Bussning; Bague; Bague	2	140173	
31	Axle Axel; Achse; Axe	2	134521	
32	Screw Skruv; Schraube; Vis	2	29522	
33	Axle(Stainless Steel) Axel(Rostfri); Achse(Nichtrostende); Axe(Inoxydable)	1	169836	
33	Axle Axel; Achse; Axe	1	172644	

© TOYOTA Industrial Equipment Europe SARL Ancenis, France

TOYOTA

Pos	Description	Pcs	Part No	Note
34	Greasing nipple Smörjnippel; Smiernippel; Graisseur	2	22410	

© TOYOTA Industrial Equipment Europe SARL Ancenis, France

0390-102

P0013103

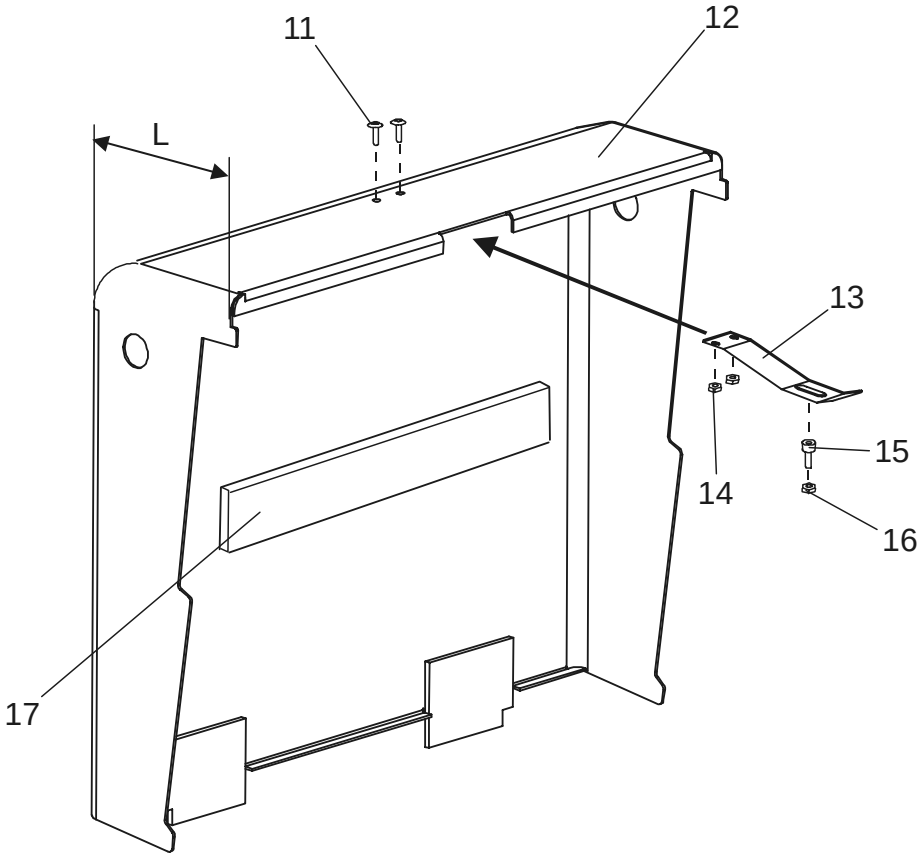

0390-102 Battery compartment parts

[2000-11-08]

Batteriutrymmesdelar; Batterieraumteile; Pièce de compartiment batterie

			677 2 PM 18 678 2 PM 20 678 2 PM20N	364690 - 364690 - 364690 -
Pos	Description	Pcs	Part No	Note
11	Screw Skruv; Schraube; Vis	2	28922	
12	Cover(Orange) Huv; Haube; Capot	1	177368-031	L = 158 mm
12	Cover(Orange) Huv; Haube; Capot	1	177370-031	L = 204 mm
12	Cover(Orange) Huv; Haube; Capot	1	177372-031	L = 252 mm
13	Locking plate Låsplåt; Schlussplatte; Lame de serrage	1	134517	L = 204 mm, L = 252 mm
13	Locking plate Låsplåt; Schlussplatte; Lame de serrage	1	177389	L = 158 mm
14	Nut Mutter; Mutter; Ecrou	2	20016	
15	Screw Skruv; Schraube; Vis	1	20184	
16	Nut Mutter; Mutter; Ecrou	1	20016	
17	Damper Dämpare; Dämpfer; Attenteur	1	173185	

© TOYOTA Industrial Equipment Europe SARL Ancenis, France

0390-112

P0013834

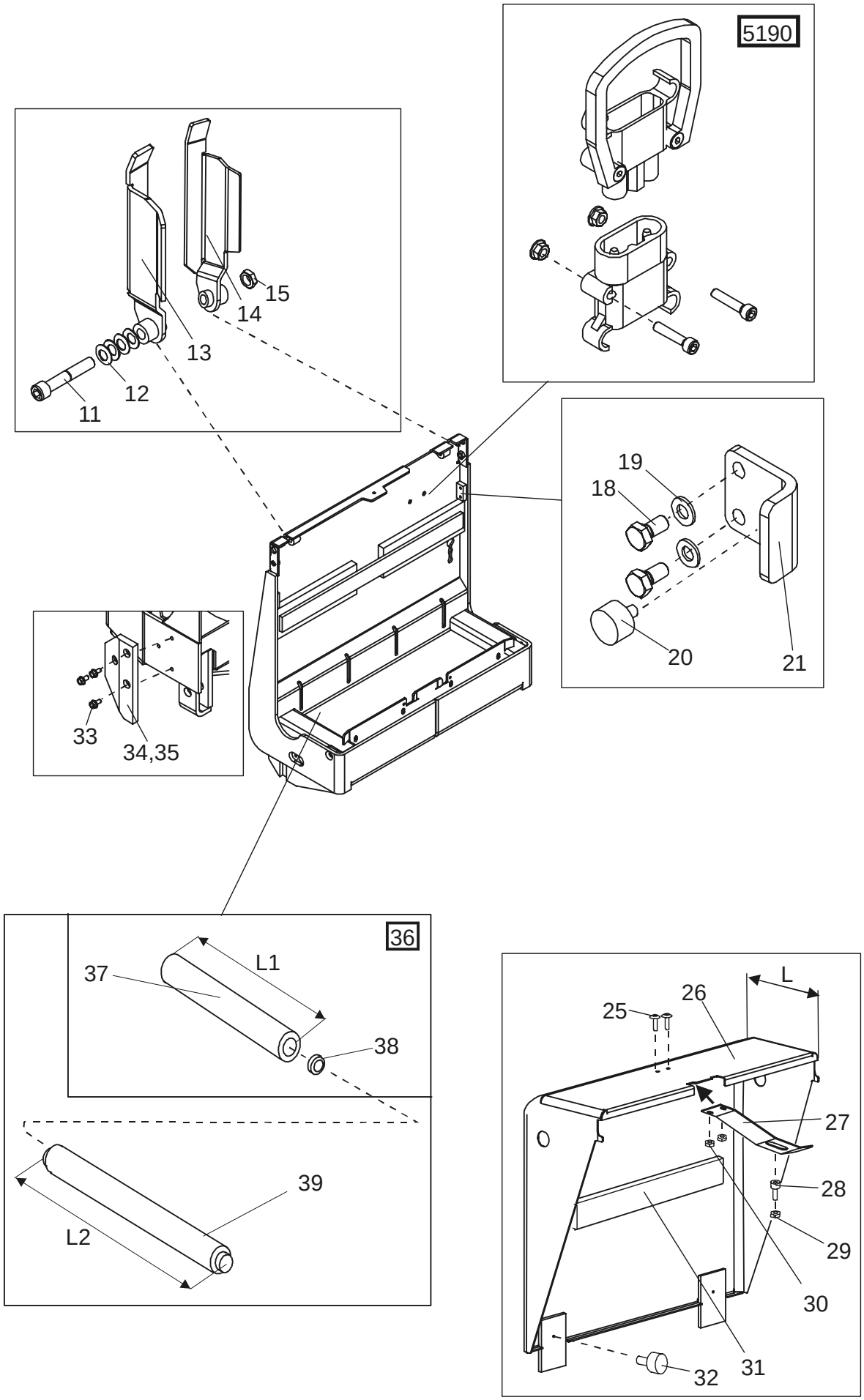

© TOYOTA Industrial Equipment Europe SARL Ancenis, France

0390-112 Battery compartment parts

[2001-02-12]

Batteriutrymmesdelar; Batterieraumteile; Pièce de compartiment batterie

			678 2 PM 20	406404 -
Pos	Description	Pcs	Part No	Note
11	Screw Skruv; Schraube; Vis	2	21251	
12	Washer Bricka; Scheibe; Rondelle	6	164052	
13	Lock Lås; Schloss; Verrou	1	180779	Right Höger; Recht; Droit
14	Lock Lås; Schloss; Verrou	1	180778	Left Vänster; Links; Gauge
15	Nut Mutter; Mutter; Ecrou	2	20777	
18	Screw Skruv; Schraube; Vis	2	20078	
19	Washer Bricka; Scheibe; Rondelle	2	20404	
20	Buffer Buffert; Puffer; Atténnateur	1	23791	
21	Support Stöd; Stütze; Appui	1	180741	
25	Screw Skruv; Schraube; Vis	2	28922	
26	Battery door(Orange) Batterilucka; Batterietür; Porte de batterie	1	177374-031	L = 246 mm
26	Battery door(Orange) Batterilucka; Batterietür; Porte de batterie	1	177376-031	L = 296 mm
27	Locking plate Låsplåt; Schlussplatte; Lame de serrage	1	134517	
28	Screw Skruv; Schraube; Vis	1	20184	
29	Nut Mutter; Mutter; Ecrou	1	20016	
30	Nut Mutter; Mutter; Ecrou	2	20016	
31	Damper Dämpare; Dämpfer; Attenteur	1	164062	
32	Damper Dämpare; Dämpfer; Attenteur	2	29686	
33	Screw Skruv; Schraube; Vis	6	28548	
34	Distance piece Distans; Distanz; Distance	1	179049	Right Höger; Recht; Droit
35	Distance piece Distans; Distanz; Distance	1	179050	Left Vänster; Links; Gauge
36	Roller(Complete) Rulle(Komplett); Rolle(Komplett); Roleau(Complet)	4	163259-015	L2 = 269 mm
36	Roller(Complete) Rulle(Komplett); Rolle(Komplett); Roleau(Complet)	4	163259-016	L2 = 219 mm
37	Roller Rulle; Rolle; Roleau	4	163258-015	L1 = 250 mm
37	Roller Rulle; Rolle; Roleau	4	163258-016	L1 = 200 mm
38	Ball bearing Kullager; Kugellager; Roulement a billes	8	22930	
39	Axle Axel; Achse; Axe	4	163257-015	L2 = 269 mm
39	Axle Axel; Achse; Axe	4	163257-016	L2 = 219 mm

© TOYOTA Industrial Equipment Europe SARL Ancenis, France

0400-024

P0013105

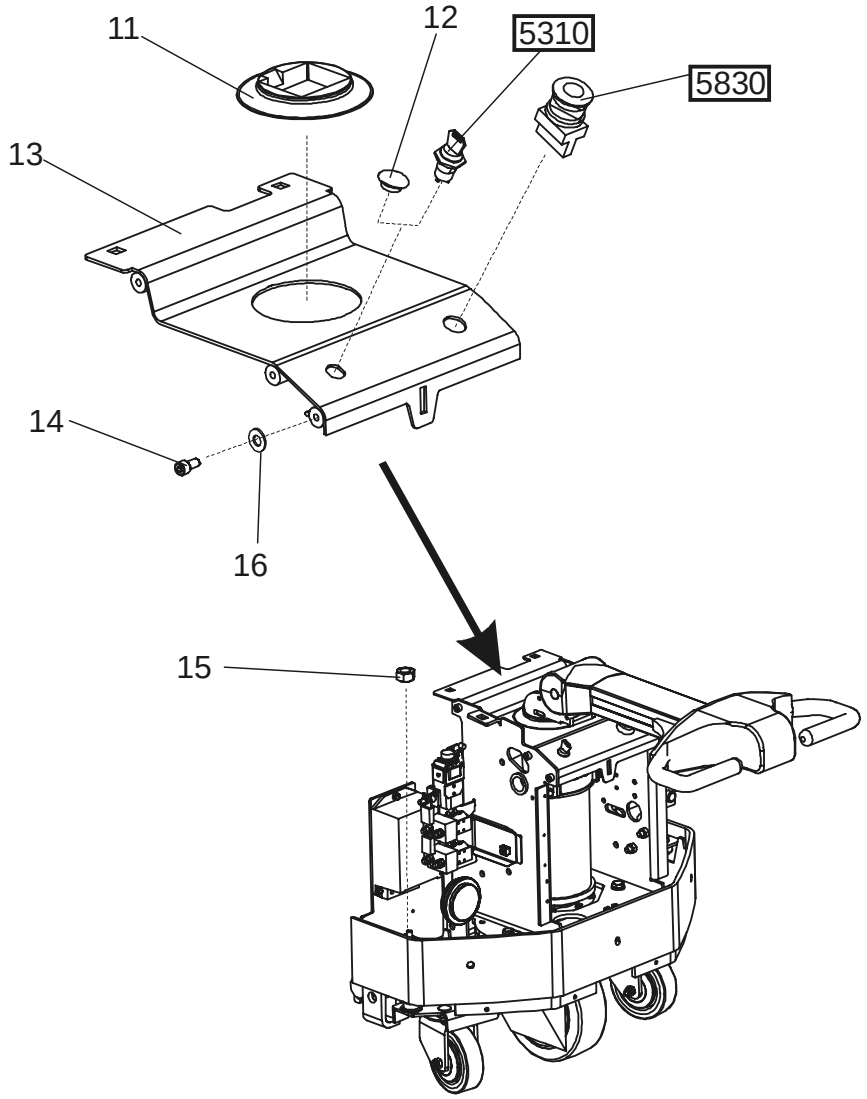

© TOYOTA Industrial Equipment Europe SARL Ancenis, France

0400-024 Frame/chassis components

[2000-11-08]

Ram-monterade detaljer; Chassisanbauteile; Composants du châssis

			677 2 PM 18 678 2 PM 20 678 2 PM20N	364690 - 364690 - 364690 -
Pos	Description	Pcs	Part No	Note
11	Dust guard Damask; Gamaschen; Dispositif de protection	1	169285	
12	Cap Lock; Deckel; Couvercle	1	139240-190	
13	Plate(Orange) Plåt; Platte; Plaque	1	169803-031	
14	Screw Skruv; Schraube; Vis	6	20184	
15	Nut Mutter; Mutter; Ecrou	2	20130	
16	Washer Bricka; Scheibe; Rondelle	12	126723-003	

© TOYOTA Industrial Equipment Europe SARL Ancenis, France

0820-076

P0011411

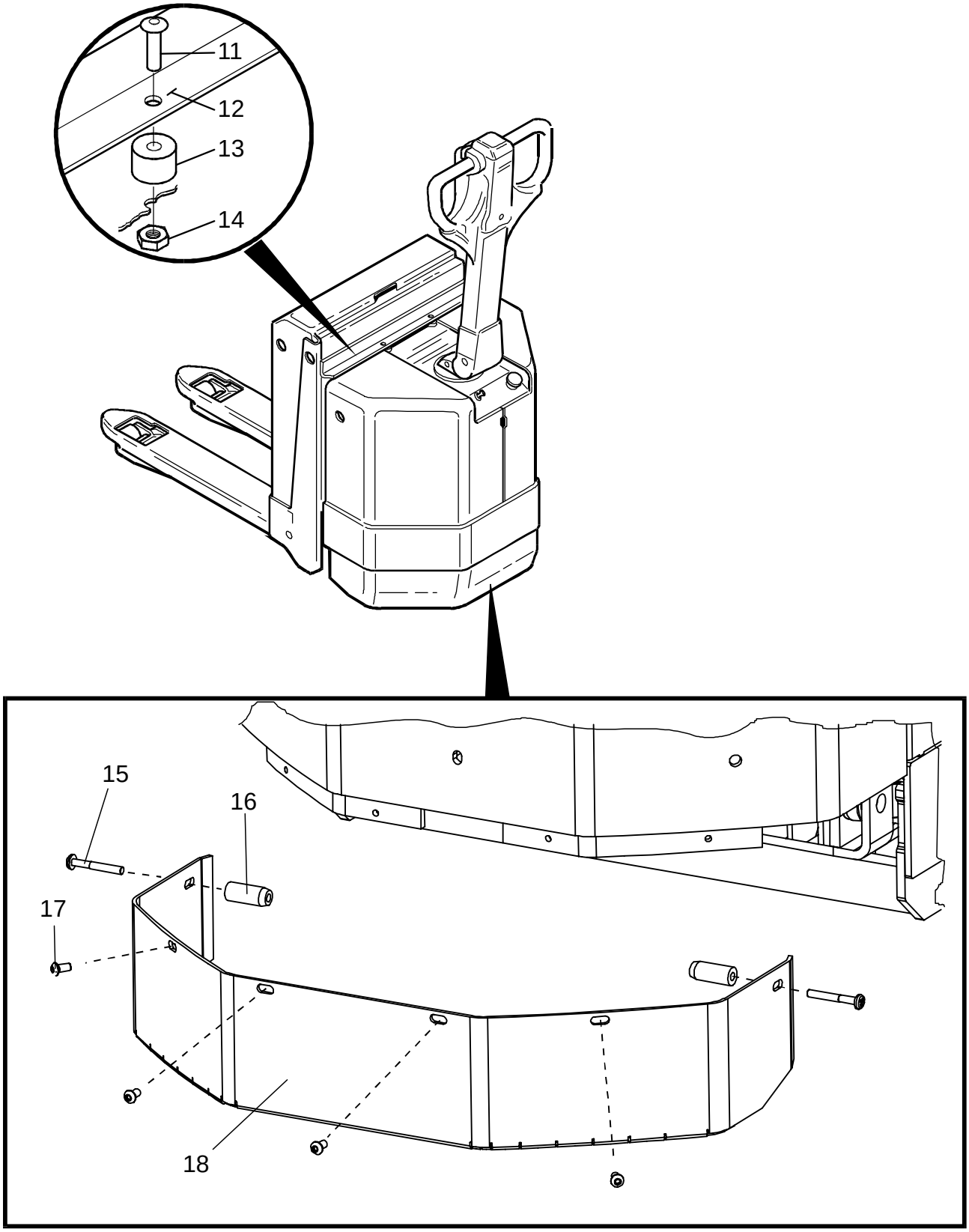

© TOYOTA Industrial Equipment Europe SARL Ancenis, France

0820-076 Finger/foot guards

[1999-11-18]

Finger-/fotskydd; Finger-/ Fussschutz; Protection de doigts/pieds anti-écrasement

			677 2 PM 18 678 2 PM 20 678 2 PM20N	364690 - 364690 - 364690 -
Pos	Description	Pcs	Part No	Note
11	Screw Skruv; Schraube; Vis	2	22533	
12	Protection Skydd; Schutz; Protéege	1	134519	
13	Rubber washer Gummibricka; Gummischeibe; Rondelle de cautchouc	2	139742	
14	Nut Mutter; Mutter; Ecrou	2	28930	
15	Screw Skruv; Schraube; Vis	2	29522	
16	Axle Axel; Achse; Axe	2	134521	
17	Screw Skruv; Schraube; Vis	4	29544	
18	Protection Skydd; Schutz; Protéege	1	172117	

© TOYOTA Industrial Equipment Europe SARL Ancenis, France

0850-157

P0013129

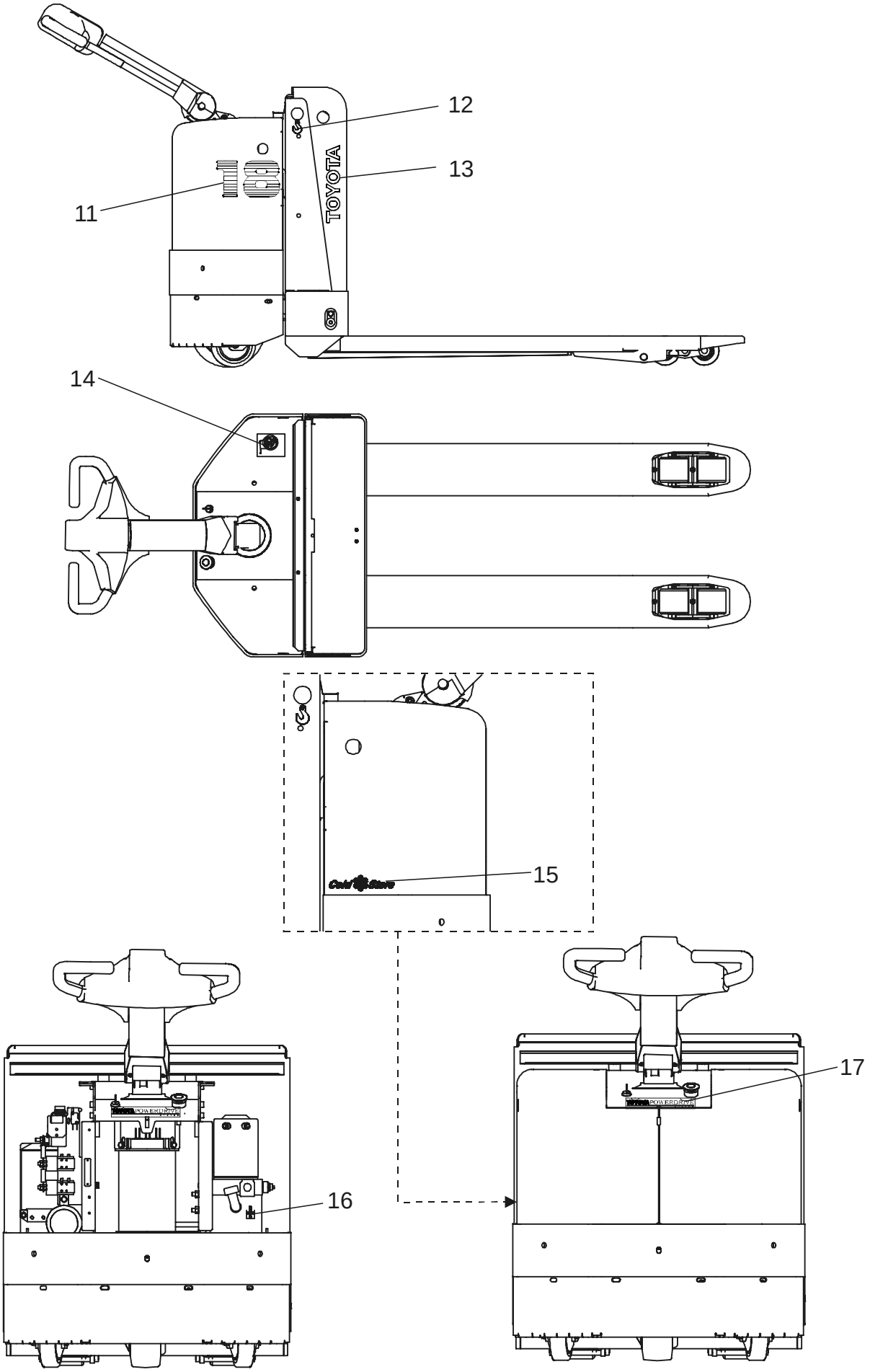

© TOYOTA Industrial Equipment Europe SARL Ancenis, France

0850-157 Signs, warnings, decals

[2000-11-09]

Skyltar, varningar, dekaler; Schilder, Warnzeichen, Aufkleber; Vignettes, avertissements, autocollants

			677 2 PM 18 678 2 PM 20 678 2 PM20N	364690 - 364690 - 364690 -
Pos	Description	Pcs	Part No	Note
11	Sign(18) Skylt; Schild; Vignette	2	169532	
11	Sign(20) Skylt; Schild; Vignette	2	169533	
12	Sign Skylt; Schild; Vignette	2	168719	
13	Sign Skylt; Schild; Vignette	2	168388	
14	Sign Skylt; Schild; Vignette	1	161150	
15	Sign(Cold Store) Skylt; Schild; Vignette	1	133434	
16	Sign(Cold stores) Skylt(Fryshus); Schild(Gefrieranlage); Vignette(Chambre frigorifique)	1	147488	
16	Sign Skylt; Schild; Vignette	1	72082	
17	Sign Skylt; Schild; Vignette	1	177365	

© TOYOTA Industrial Equipment Europe SARL Ancenis, France

1710-016

P0011277

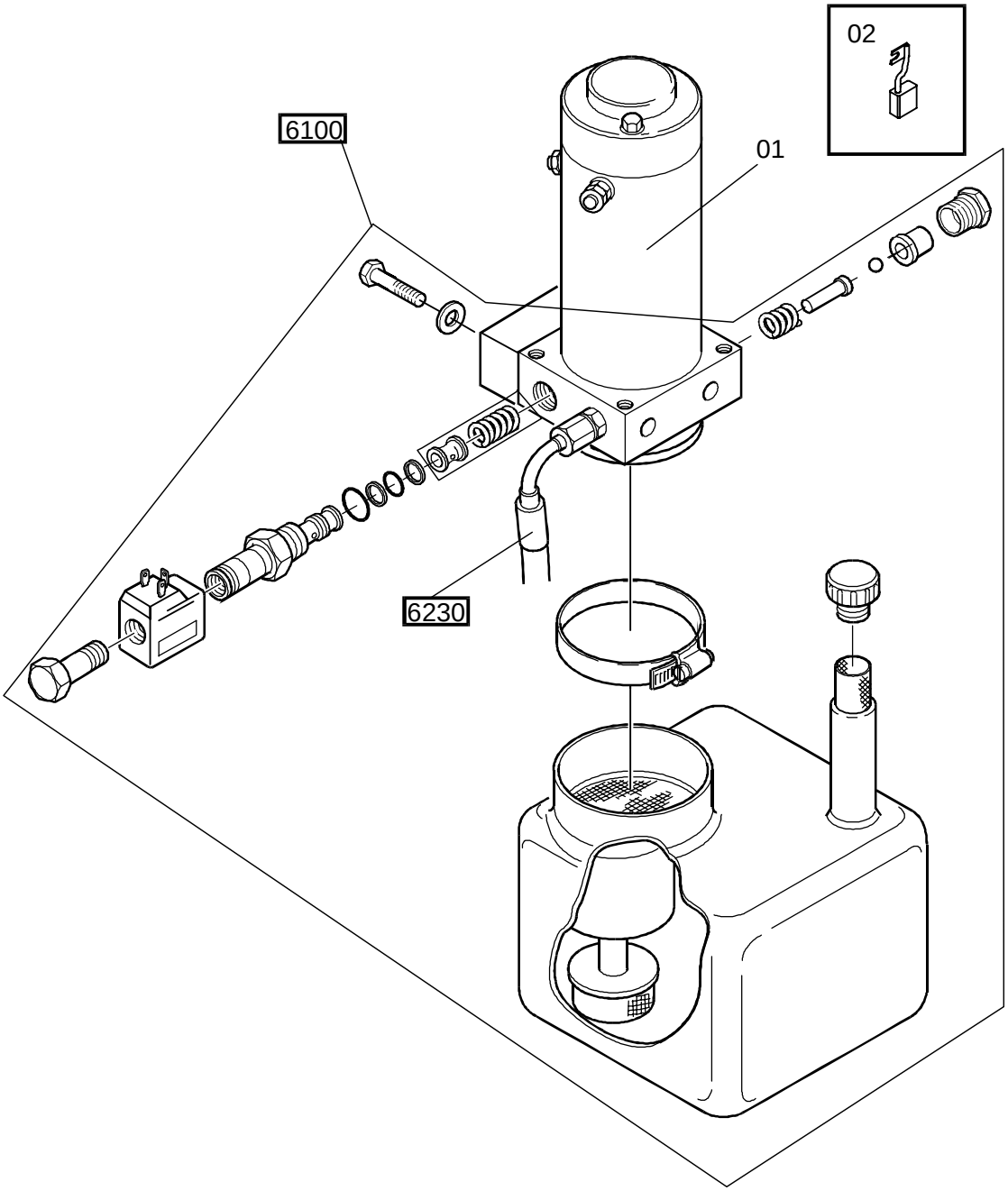

1710-016 Electric pump motor

[1999-11-01]

Elektrisk pumpmotor; Elektro-Pumpenmotor; Moteur de pompe électrique

			677 2 PM 18	364690 -
Pos	Description	Pcs	Part No	Note
01	Motor Motor; Motor; Moteur	1	163848	
02	Carbon brush set Kolsats; Kohlenbürstesats; Jeux de charbon	1	163849	

© TOYOTA Industrial Equipment Europe SARL Ancenis, France

1710-017

P0011299

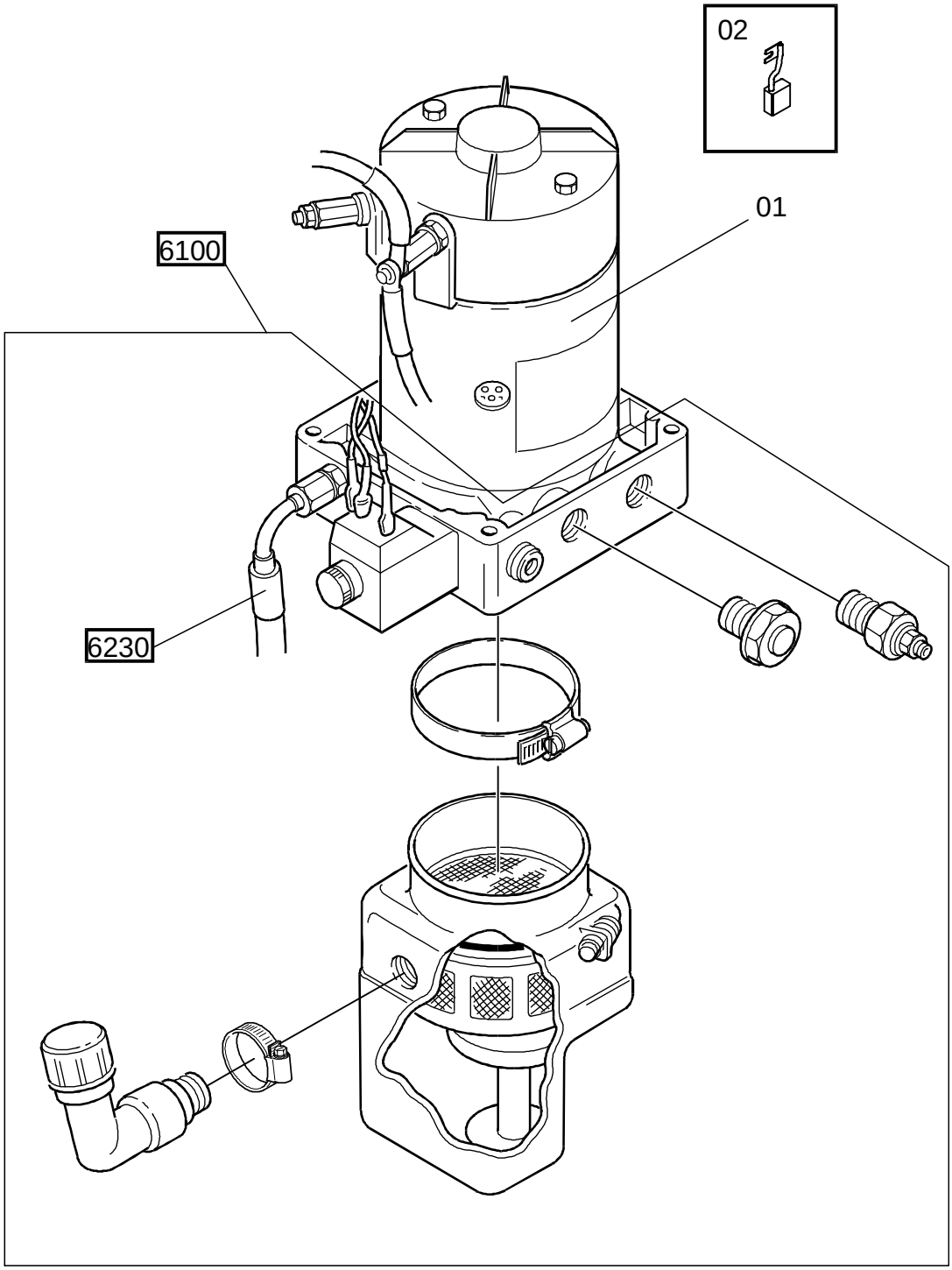

1710-017 Electric pump motor

[1999-11-04]

Elektrisk pumpmotor; Elektro-Pumpenmotor; Moteur de pompe électrique

			678 2 PM 20 678 2 PM20N	364690 - 364690 -
Pos	Description	Pcs	Part No	Note
01	Motor Motor; Motor; Moteur	1	164205	
02	Carbon brush(Kit) Kolborste(Sats); Kohlebürste(satz); Charbon(Jeux)	1	164206	

© TOYOTA Industrial Equipment Europe SARL Ancenis, France

1760-015

P0011297

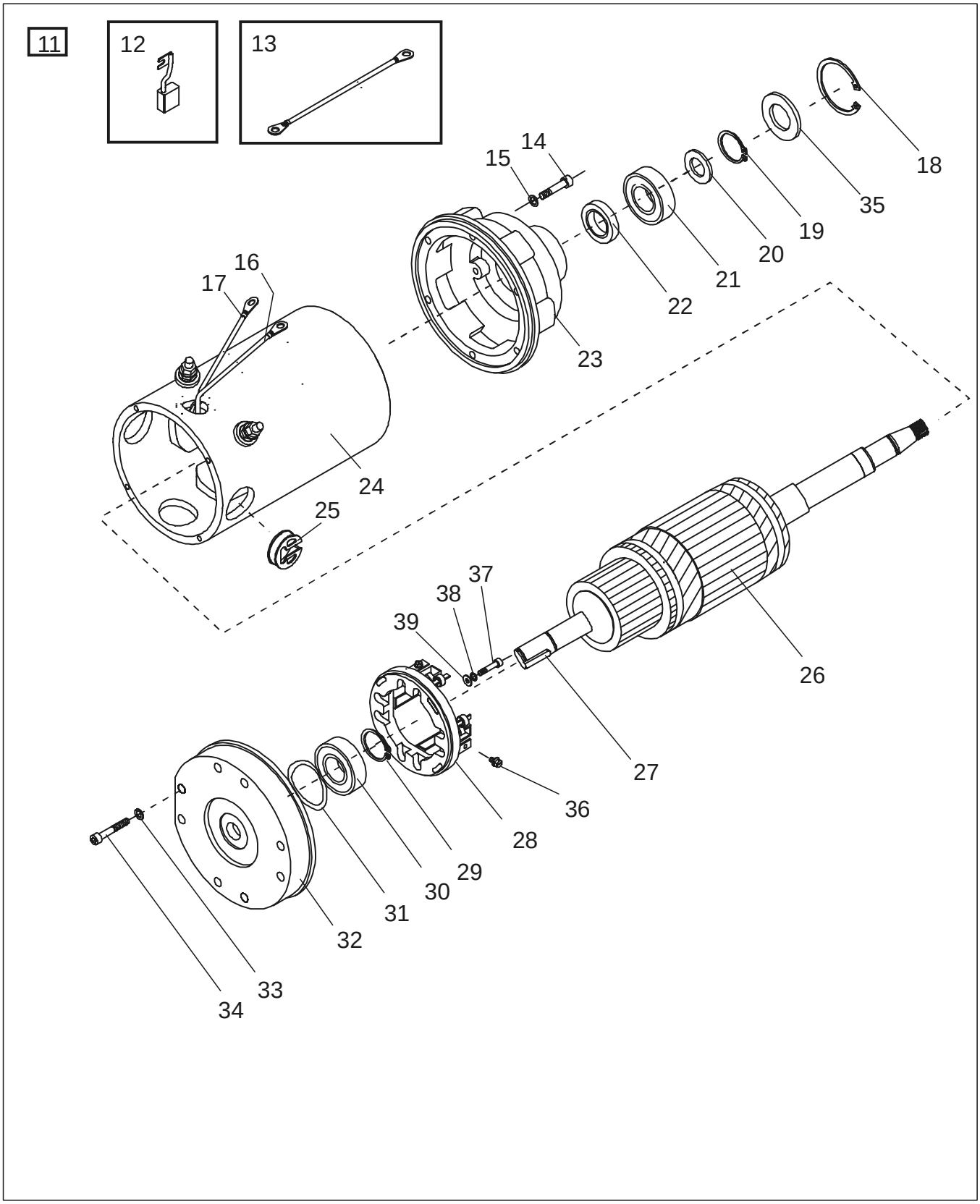

© TOYOTA Industrial Equipment Europe SARL Ancenis, France

1760-015 Electric drive motor

[1999-11-04]

Elektrisk åkmotor; Elektro-Fahrmotor; Moteur de traction électrique

			678 2 PM 20 678 2 PM20N	364690 - 364690 -
Pos	Description	Pcs	Part No	Note
11	Motor(Complete) Motor(Komplett); Motor(Komplett); Moteur(Complet)	1	173176	
12	Carbon brush Kolborste; Kohlebürste; Charbon	4	161611	
13	Cable Kabel; Kabel; Câble	2	27899	
14	Screw Skruv; Schraube; Vis	6	20224	
15	Washer Bricka; Scheibe; Rondelle	6	21351	
16	Cable Kabel; Kabel; Câble	1	175313	
17	Cable Kabel; Kabel; Câble	1	175312	
18	Locking ring Spårring; Schliessring; Circlip	1	20923	
19	Locking ring Spårring; Schliessring; Circlip	1	29515	
20	Washer Bricka; Scheibe; Rondelle	1	29516	
21	Ball bearing Kullager; Kugellager; Roulement a billes	1	26102	
22	Sealing Tätning; Dichtung; Joint	1	28884	
23	End shield Lagersköld; Lagerschild; Bouclier	1	139172	
24	Stator Stator; Ständer; Stator	1	175306	
25	Plug Propp; Pfropfen; Bouchon	4	148206	
26	Rotor Rotor; Rotor; Rotor	1	139178	
27	Key Kil; Keil; Clavette	1	27900	
28	Brush bridge Borstbrygga; Bürstenbräcke; Support de porte balais	1	135853	
29	Locking ring Spårring; Schliessring; Circlip	1	22122	
30	Bearing Lager; Lager; Roulement	1	28560	
31	Locking ring Spårring; Schliessring; Circlip	1	27542	
32	End shield Lagersköld; Lagerschild; Bouclier	1	175309	
33	Washer Bricka; Scheibe; Rondelle	8	21351	
34	Screw Skruv; Schraube; Vis	8	20224	
35	Washer Bricka; Scheibe; Rondelle	1	29517	
36	Screw Skruv; Schraube; Vis	4	175320	
37	Screw Skruv; Schraube; Vis	4	21272	
38	Washer Bricka; Scheibe; Rondelle	4	20236	
39	Washer Bricka; Scheibe; Rondelle	4	21307	

© TOYOTA Industrial Equipment Europe SARL Ancenis, France

1760-024

P0011297

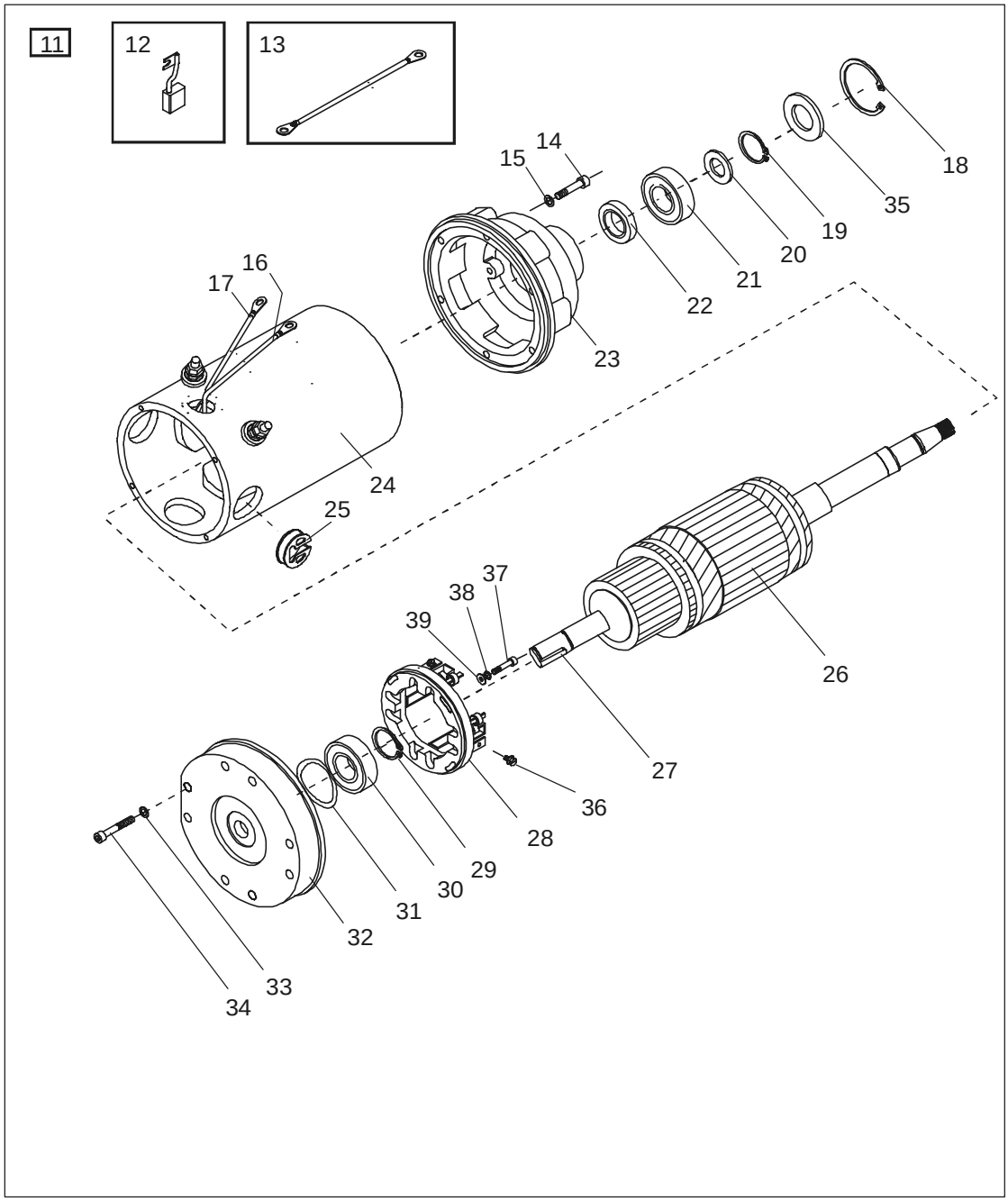

1760-024 Electric drive motor

[2000-09-07]

Elektrisk åkmotor; Elektro-Fahrmotor; Moteur de traction électrique

			677 2 PM 18	364690 -
Pos	Description	Pcs	Part No	Note
11	Motor(Complete) Motor(Komplett); Motor(Komplett); Moteur(Complet)	1	177007	
12	Carbon brush Kolborste; Kohlebürste; Charbon	4	161611	
13	Cable Kabel; Kabel; Câble	2	27899	
14	Screw Skruv; Schraube; Vis	6	20224	
15	Washer Bricka; Scheibe; Rondelle	6	21351	
16	Cable Kabel; Kabel; Câble	1	175313	
17	Cable Kabel; Kabel; Câble	1	175312	

© TOYOTA Industrial Equipment Europe SARL Ancenis, France

Pos	Description	Pcs	Part No	Note
18	Locking ring Spårring; Schliessring; Circlip	1	20923	
19	Locking ring Spårring; Schliessring; Circlip	1	29515	
20	Washer Bricka; Scheibe; Rondelle	1	29516	
21	Ball bearing Kullager; Kugellager; Roulement a billes	1	26102	
22	Sealing Tätning; Dichtung; Joint	1	28884	
23	End shield Lagersköld; Lagerschild; Bouclier	1	139172	
24	Stator Stator; Ständer; Stator	1	175306	
25	Plug Propp; Pfropfen; Bouchon	4	148206	
26	Rotor Rotor; Rotor; Rotor	1	139178	
27	Key Kil; Keil; Clavette	1	27900	
28	Brush bridge Borstbrygga; Bürstenbräcke; Support de porte balais	1	135853	
29	Locking ring Spårring; Schliessring; Circlip	1	22122	
30	Bearing Lager; Lager; Roulement	1	28560	
31	Locking ring Spårring; Schliessring; Circlip	1	27542	
32	End shield Lagersköld; Lagerschild; Bouclier	1	175309	
33	Washer Bricka; Scheibe; Rondelle	8	21351	
34	Screw Skruv; Schraube; Vis	8	20224	
35	Washer Bricka; Scheibe; Rondelle	1	29517	
36	Screw Skruv; Schraube; Vis	4	175320	
37	Screw Skruv; Schraube; Vis	4	21272	
38	Washer Bricka; Scheibe; Rondelle	4	20236	
39	Washer Bricka; Scheibe; Rondelle	4	21307	

© TOYOTA Industrial Equipment Europe SARL Ancenis, France

2550-032

P0011303

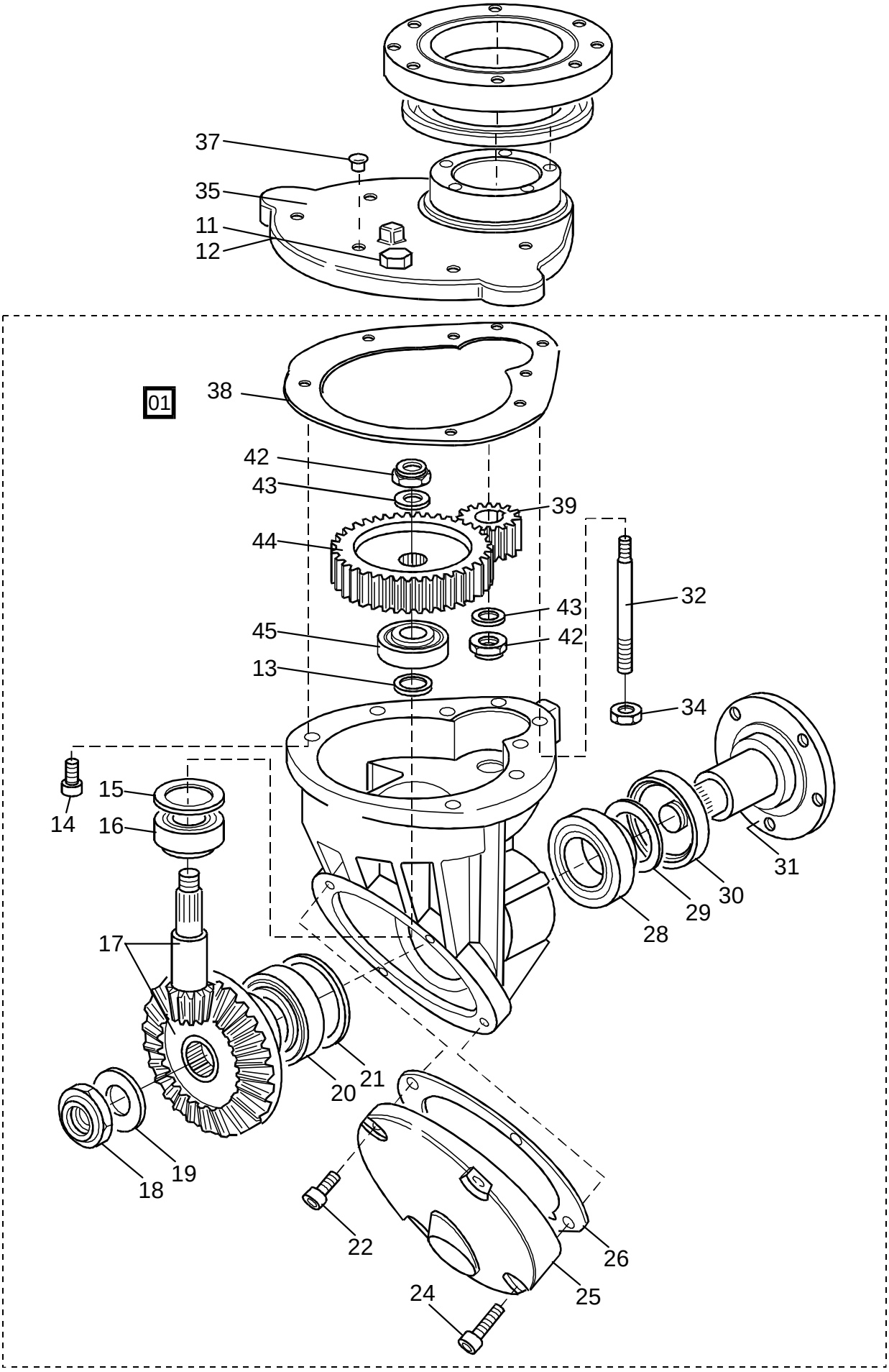

© TOYOTA Industrial Equipment Europe SARL Ancenis, France

2550-032 Mechanical drive gear unit

[2001-03-26]

Drivaggregat/-växel; Antriebsaggregat/-getriebe; Groupe de traction, réducteur

			677 2 PM 18 678 2 PM 20 678 2 PM20N	364690 - 364690 - 364690 -
Pos	Description	Pcs	Part No	Note
01	Driving gear compl. Drivväxel kompl.; Antriebssatz kompl.; Groupe de entrainement compl.	1	170539	6 km/h
11	Dip stick Oljesticka; Ölmesstab; Jauge d´huile	1	135915	
12	Washer Bricka; Scheibe; Rondelle	1	28998	
13	Shim(0,05mm) Shims; Schim; Cale		27220	
13	Shim(0,1mm) Shims; Schim; Cale		27221	
13	Shim(0,2mm) Shims; Schim; Cale		27222	
13	Shim(0,3mm) Shims; Schim; Cale		27223	
13	Shim(0,5mm) Shims; Schim; Cale		27224	
13	Shim(1 mm) Shims; Schim; Cale		27225	
14	Screw Skruv; Schraube; Vis	4	21141	
15	Shim(0,05mm) Shims; Schim; Cale		27232	
15	Shim(0,1mm) Shims; Schim; Cale		27233	
15	Shim(0,2mm) Shims; Schim; Cale		27234	
15	Shim(0,3mm) Shims; Schim; Cale		27235	
15	Shim(0,5 mm) Shims; Schim; Cale		27236	
15	Shim(1 mm) Shims; Schim; Cale		27237	
16	Roller bearing Rullager; Rollenlager; Palier à roleaux	1	27208	
17	Spare part kit : Bevel gear Reservdelssats : Koniskt kugghjul; Satz : Kegelrad; Jeux : Roue conique à denture droite	1	101092	
18	Nut Mutter; Mutter; Ecrou	1	101098	
19	Washer Bricka; Scheibe; Rondelle	1	23604	
20	Roller bearing Rullager; Rollenlager; Palier à roleaux	1	27206	
21	Shim(0,05mm) Shims; Schim; Cale		27238	
21	Shim(0,1mm) Shims; Schim; Cale		27239	
21	Shim(0,2mm) Shims; Schim; Cale		27240	
21	Shim(0,3mm) Shims; Schim; Cale		27241	
21	Shim(0,5mm) Shims; Schim; Cale		27242	
21	Shim(1 mm) Shims; Schim; Cale		27243	
22	Screw Skruv; Schraube; Vis	2	28519	
24	Screw Skruv; Schraube; Vis	2	20276	

© TOYOTA Industrial Equipment Europe SARL Ancenis, France

Pos	Description	Pcs	Part No	Note
25	Cap Lock; Deckel; Couvercle	1	127280	
26	Packing Packning; Packung; Étanchage	1	141687	
27	Gear housing Växelhus; Getriebhäuse; Carter étauche	1	135340	
28	Roller bearing Rullager; Rollenlager; Palier à roleaux	1	27206	
29	Shim(0,05mm) Shims; Schim; Cale		27226	
29	Shim(0,1mm) Shims; Schim; Cale		27227	
29	Shim(0,2mm) Shims; Schim; Cale		27228	
29	Shim(0,3mm) Shims; Schim; Cale		27229	
29	Shim(0,5 mm) Shims; Schim; Cale		27230	
29	Shim(1 mm) Shims; Schim; Cale		27231	
30	Sealing Tätning; Dichtung; Joint	1	28490	
31	Axle Axel; Achse; Axe	1	126998	
32	Screw Skruv; Schraube; Vis	4	27216	
34	Nut Mutter; Mutter; Ecrou	8	20016	
35	Cap Lock; Deckel; Couvercle	1	135342	
37	Air bleeder Luftventil; Luftnippel; Soupape (air)	1	27211	
38	Packing Packning; Packung; Étanchage	1	135345	
39	Gear wheel Kugghjul; Zahnrad; Roue dentée	1	137959	
41	Nut Mutter; Mutter; Ecrou	8	20016	
42	Nut Mutter; Mutter; Ecrou	2	101097	
43	Washer Bricka; Scheibe; Rondelle	2	63081	
44	Gear wheel Kugghjul; Zahnrad; Roue dentée	1	137958	
45	Bearing Lager; Lager; Roulement	1	27207	

© TOYOTA Industrial Equipment Europe SARL Ancenis, France

© TOYOTA Industrial Equipment Europe SARL Ancenis, France

3370-010

P0011272

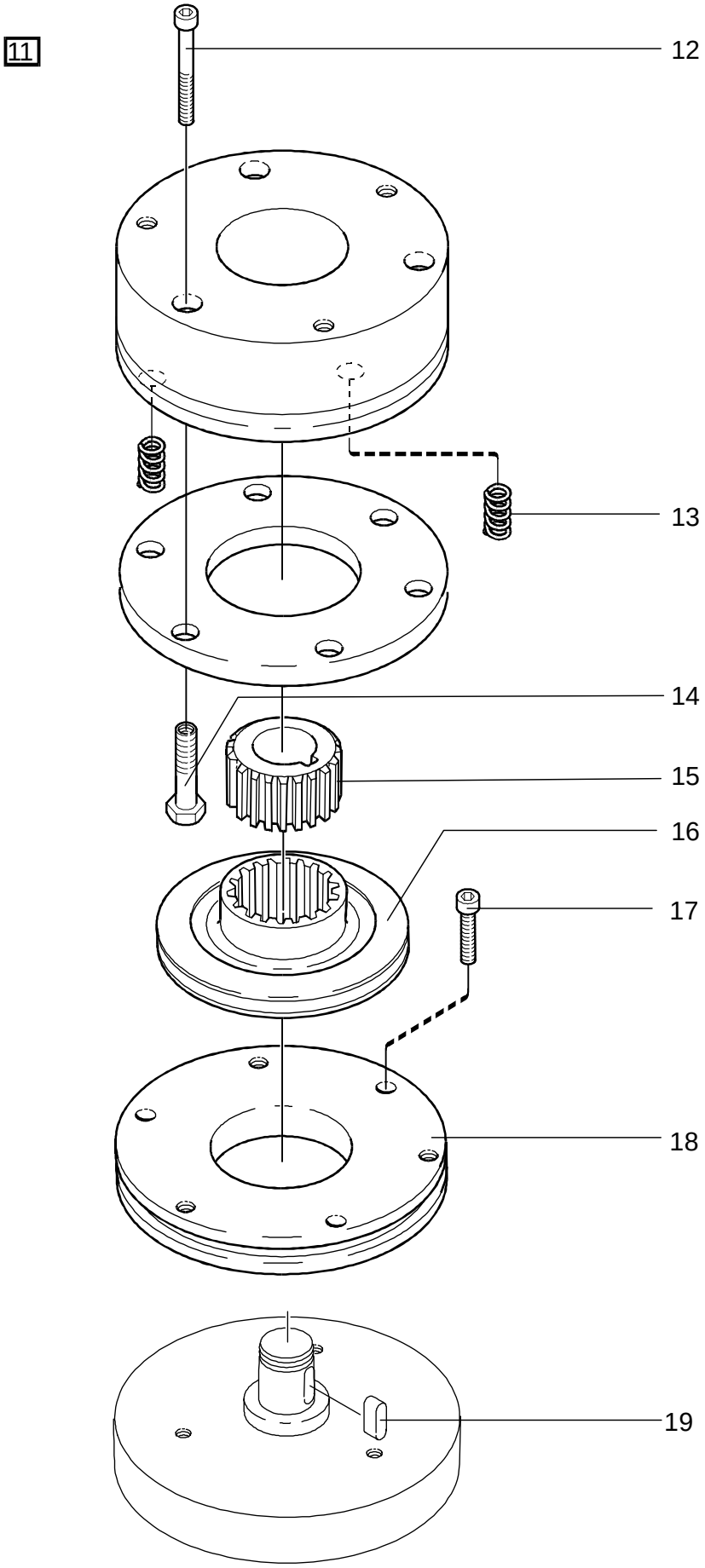

© TOYOTA Industrial Equipment Europe SARL Ancenis, France

3370-010 Electromagnetic parking brake [1999-10-28]

El-parkeringsbroms, magnetbroms; Elektro-Feststellbremse, Magnetbremse; Frein de stationnement électromagnétique

			677 2 PM 18 678 2 PM 20 678 2 PM20N	364690 - 364690 - 364690 -
Pos	Description	Pcs	Part No	Note
11	Brake compl. Broms kompl.; Brems Kompl.; Frein compl.	1	173609	
12	Screw Skruv; Schraube; Vis	3	23457	
13	Spring Fjäder; Feder; Ressort	1	175049	Kit Sats; satz; Jeux
14	Sleeve Hylsa; Hülse; Douille	3	175048	
15	Hub Nav; Nabe; Moyeu	1	175046	
16	Rotor Rotor; Rotor; Rotor	1	175047	
17	Screw Skruv; Schraube; Vis	3	20743	
18	Lamina Platta; Platten; Platine	1	175050	
19	Key Kil; Keil; Clavette	1	27900	

© TOYOTA Industrial Equipment Europe SARL Ancenis, France

3530-026

P0011304

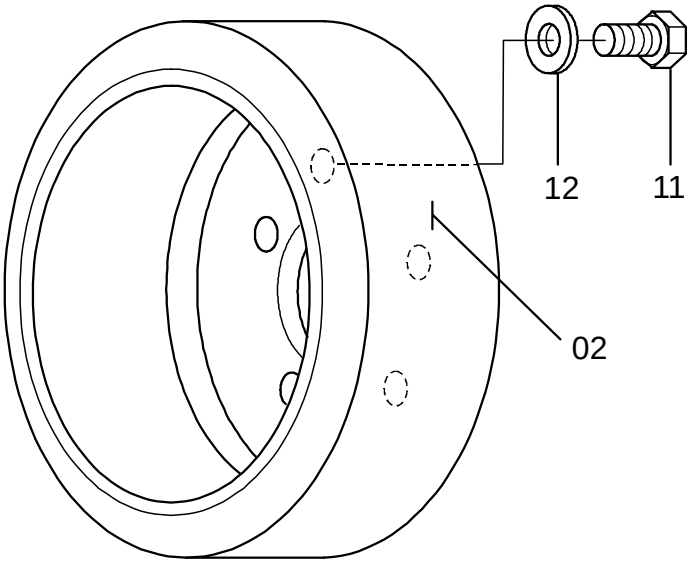

© TOYOTA Industrial Equipment Europe SARL Ancenis, France

3530-026 Drive wheel

[2001-02-12]

Drivhjul; Antriebsrad; Roue motrice

			677 2 PM 18 678 2 PM 20 678 2 PM20N	364690 - 364690 - 364690 -
Pos	Description	Pcs	Part No	Note
02	Drive wheel(Grooved) Drivhjul(Sajpad); Antriebrad(Gemustert); Roue entrainement(Sculpture)	1	121023-002	Vulkollan
02	Drive wheel(Elastomer) Drivhjul; Antriebrad; Roue entrainement	1	127352	
02	Drive wheel(Tractothan) Drivhjul; Antriebrad; Roue entrainement	1	143308	
02	Drive wheel(Vulkollan) Drivhjul; Antriebrad; Roue entrainement	1	163950	
11	Screw Skruv; Schraube; Vis	5	110803	
12	Washer Bricka; Scheibe; Rondelle	5	21393	

© TOYOTA Industrial Equipment Europe SARL Ancenis, France

3540-032

P0011305

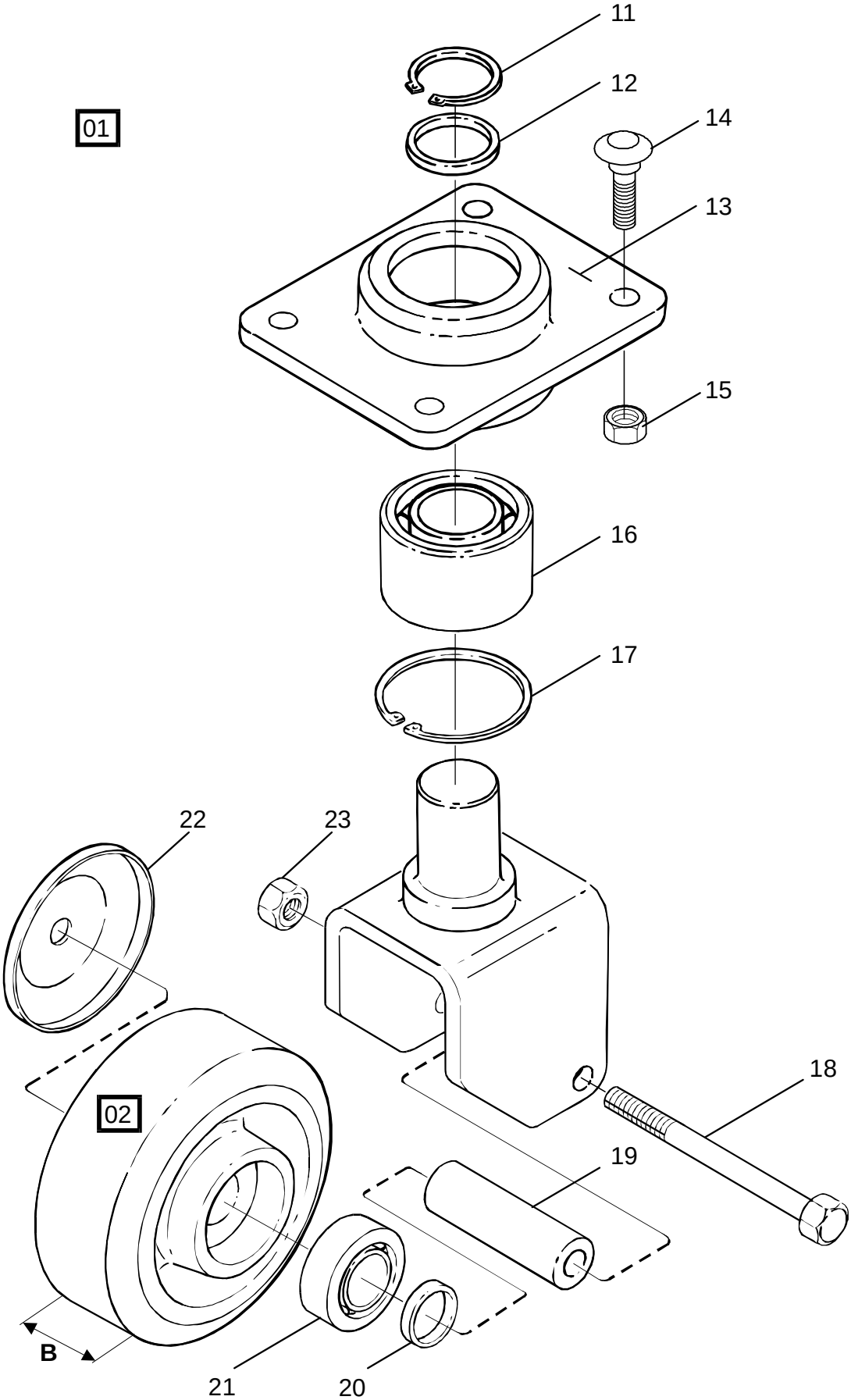

© TOYOTA Industrial Equipment Europe SARL Ancenis, France

3540-032 Support/castor wheels

[1999-11-07]

Stöd-/länkhjul; Stützräder/Gelenkrollen; Roues stabilisatrices/pivotantes

			677 2 PM 18 678 2 PM 20 678 2 PM20N	364690 - 364690 - 364690 -
Pos	Description	Pcs	Part No	Note
01	Link wheel compl. Länkhjul kompl.; Gelenkrad kompl.; Roue articulée compl.	2	136135	B = 40 mm
01	Link wheel compl. Länkhjul kompl.; Gelenkrad kompl.; Roue articulée compl.	2	157946	B = 50 mm
02	Wheel Hjul; Rad; Roue	2	134698	B = 40 mm
02	Wheel Hjul; Rad; Roue	2	156259	B = 50 mm
11	Locking ring Spårring; Schliessring; Circlip	2	20008	
12	Washer Bricka; Scheibe; Rondelle	2	69550	
13	Bracket Fäste; Halterung; Support	2	135842	
14	Screw Skruv; Schraube; Vis	8	29949	
15	Nut Mutter; Mutter; Ecrou	8	20130	
16	Bearing Lager; Lager; Roulement	2	28940	
17	Locking ring Spårring; Schliessring; Circlip	2	22759	
18	Screw Skruv; Schraube; Vis	2	20933	
19	Distance piece Distans; Distanz; Distance	2	136140	
20	Washer Bricka; Scheibe; Rondelle	4	136589	B = 40 mm
20	Distance piece Distans; Distanz; Distance	4	24115	B = 50 mm
21	Bearing Lager; Lager; Roulement	2	22226	
22	Protection Skydd; Schutz; Protéege	2	136138	
23	Nut Mutter; Mutter; Ecrou	2	20130	

© TOYOTA Industrial Equipment Europe SARL Ancenis, France

3550-094

P0011310

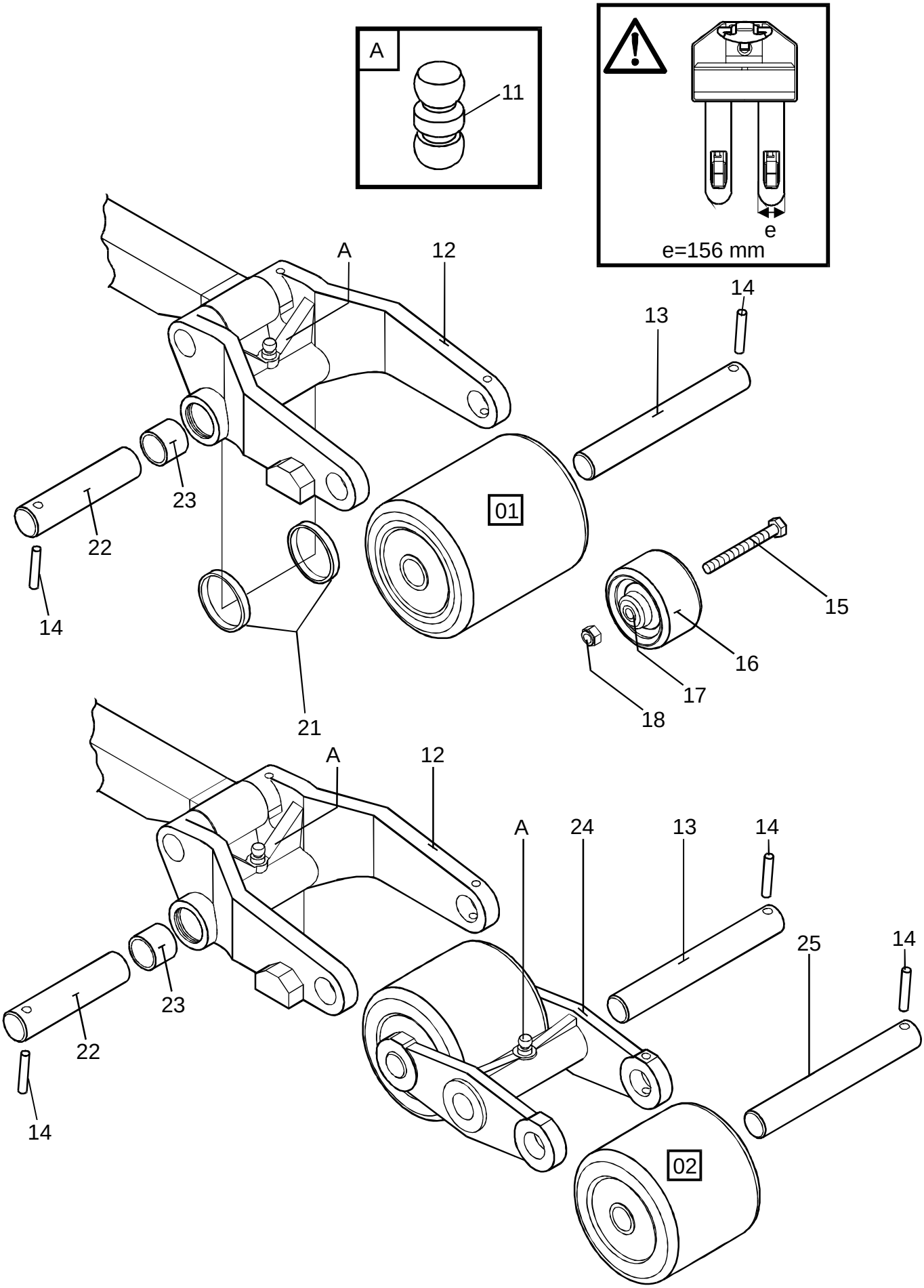

© TOYOTA Industrial Equipment Europe SARL Ancenis, France

3550-094 Fork/support arm wheels

[2001-02-12]

Gaffel-/stödbenshjul; Gabel-/Stützarmrollen; Roues bras-support

e = 156 mm			677 2 PM 18 678 2 PM20N	364690 - 364690 -
Pos	Description	Pcs	Part No	Note
01	Wheel complete(Vulkollan) Hjul komplett; Rad komplett; Roue complete	2	167599	
01	Wheel complete(Polyuretan) Hjul komplett; Rad komplett; Roue complete	2	167605	
02	Wheel complete(Vulkollan) Hjul komplett; Rad komplett; Roue complete	4	167607	
02	Wheel complete(Polyuretan) Hjul komplett; Rad komplett; Roue complete	4	167610	
11	Greasing nipple Smörjnippel; Smiernippel; Graisseur		27662	
12	Wheel fork(Complete) Hjulgaffel(Komplett); Radgabel(Komplett); Fourche de roue(Complet)	2	130685	
13	Axle Axel; Achse; Axe	2	47133	
13	Axle(Stainless Steel) Axel(Rostfri); Achse(Nichtrostende); Axe(Inoxydable)	2	49883	
14	Locking pin Spännstift; Spannstift; Goupille	2	20001	
15	Screw Skruv; Schraube; Vis	2	21385	
16	Wheel Hjul; Rad; Roue	2	47150	
17	Spacer Distanshylsa; Abstandhülse; Douille entretoise	2	47151	
18	Nut Mutter; Mutter; Ecrou	2	20433	
21	Wheel Hjul; Rad; Roue	2	65601	
22	Axle(Stainless Steel) Axel(Rostfri); Achse(Nichtrostende); Axe(Inoxydable)	2	131676	
22	Axle Axel; Achse; Axe	2	140106	
23	Bush Bussning; Bague; Bague	4	140169	
24	Bogie fork Boggigaffel; Boggigabel; Fourchebogie	2	126742	
25	Axle Axel; Achse; Axe	4	47162	
25	Axle(Stainless Steel) Axel(Rostfri); Achse(Nichtrostende); Axe(Inoxydable)	4	49884	

© TOYOTA Industrial Equipment Europe SARL Ancenis, France

3550-159

P0013826

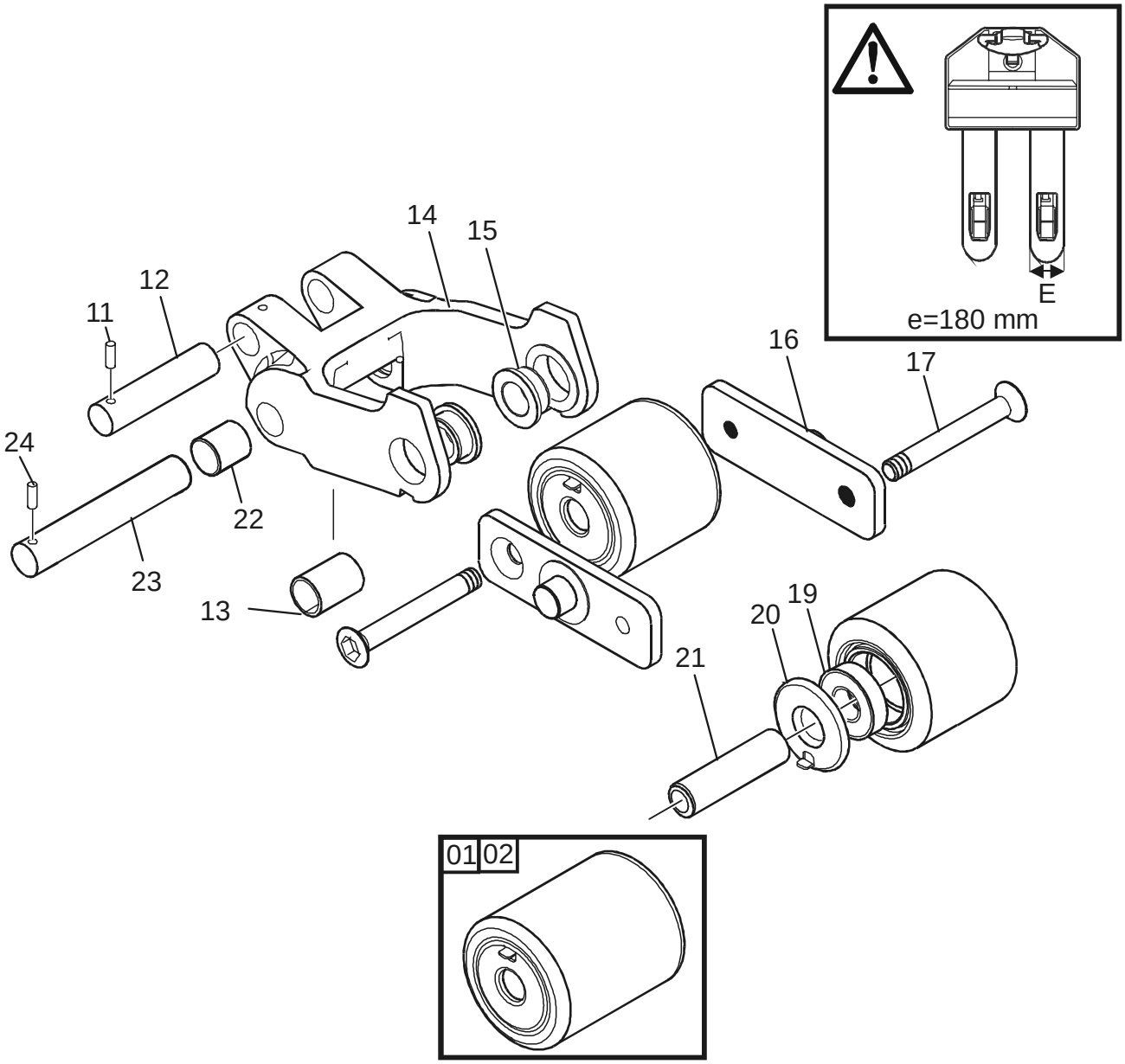

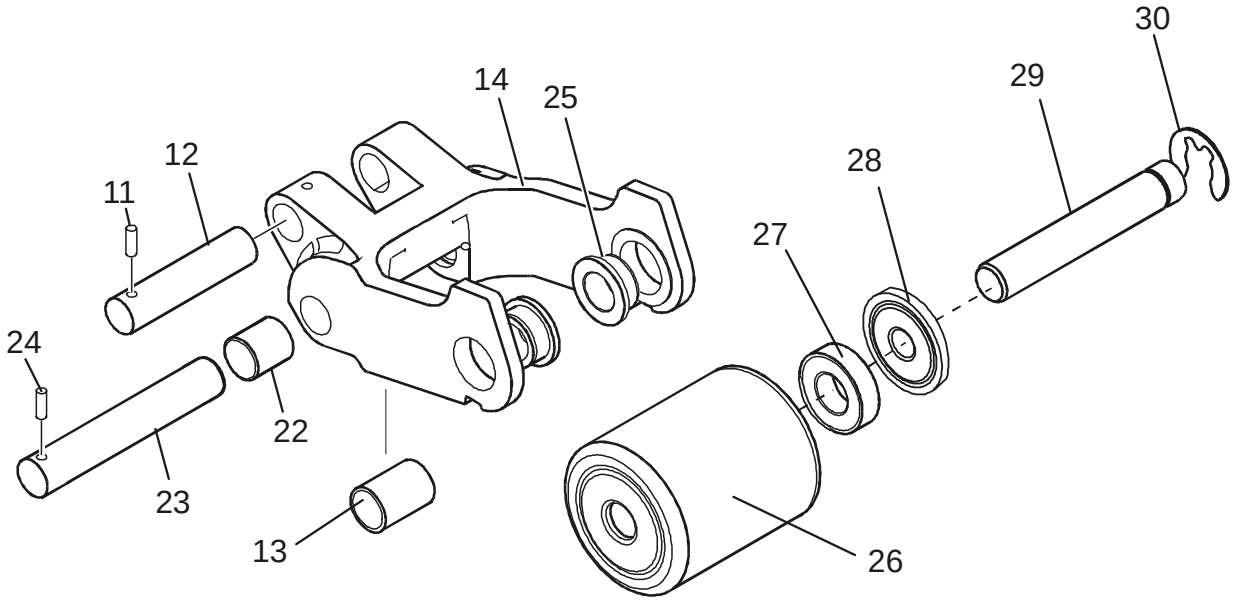

© TOYOTA Industrial Equipment Europe SARL Ancenis, France

3550-159 Fork/support arm wheels

[2001-02-11]

Gaffel-/stödbenshjul; Gabel-/Stützarmrollen; Roues bras-support

e = 180 mm			678 2 PM 20	406404 -
Pos	Description	Pcs	Part No	Note
01	Bogie wheel(Complete) Boggiehjul(Komplett); Boggirad(Komplett); Roue de fourche bogie(Complet)	4	180135	
02	Wheel complete(Vulkollan) Hjul komplett; Rad komplett; Roue complete	2	10100	
11	Locking pin Spännstift; Spannstift; Goupille	2	27921	
12	Axle Axel; Achse; Axe	2	125872	
12	Axle(Stainless Steel) Axel(Rostfri); Achse(Nichtrostende); Axe(Inoxydable)	2	126936	
13	Sleeve Hylsa; Hülse; Douille	2	134391	
14	Wheel fork Hjulgaffel; Radgabel; Fourche de roue	2	132523	
15	Bush Bussning; Bague; Bague	4	140178	
16	Bracket Fäste; Halterung; Support	4	177165	
17	Screw Skruv; Schraube; Vis	4	150132	
19	Ball bearing Kullager; Kugellager; Roulement a billes	8	20906	
20	Sealing Tätning; Dichtung; Joint	8	150127	
21	Axle Axel; Achse; Axe	4	150126-076	
22	Bush Bussning; Bague; Bague	4	140169	
23	Axle Axel; Achse; Axe	2	156750	
23	Axle(Stainless Steel) Axel(Rostfri); Achse(Nichtrostende); Axe(Inoxydable)	2	156751	
24	Locking pin Spännstift; Spannstift; Goupille	2	21316	
25	Bush Bussning; Bague; Bague	4	140178	
26	Wheel(Vulkollan) Hjul; Rad; Roue	2	31186	
27	Ball bearing Kullager; Kugellager; Roulement a billes	4	20023	
28	Sealing Tätning; Dichtung; Joint	4	20905	
29	Axle Axel; Achse; Axe	2	139185	
29	Axle(Stainless Steel) Axel(Rostfri); Achse(Nichtrostende); Axe(Inoxydable)	2	143079	
30	Locking ring Spårring; Schliessring; Circlip	2	24000	

© TOYOTA Industrial Equipment Europe SARL Ancenis, France

3570-061

P0013828

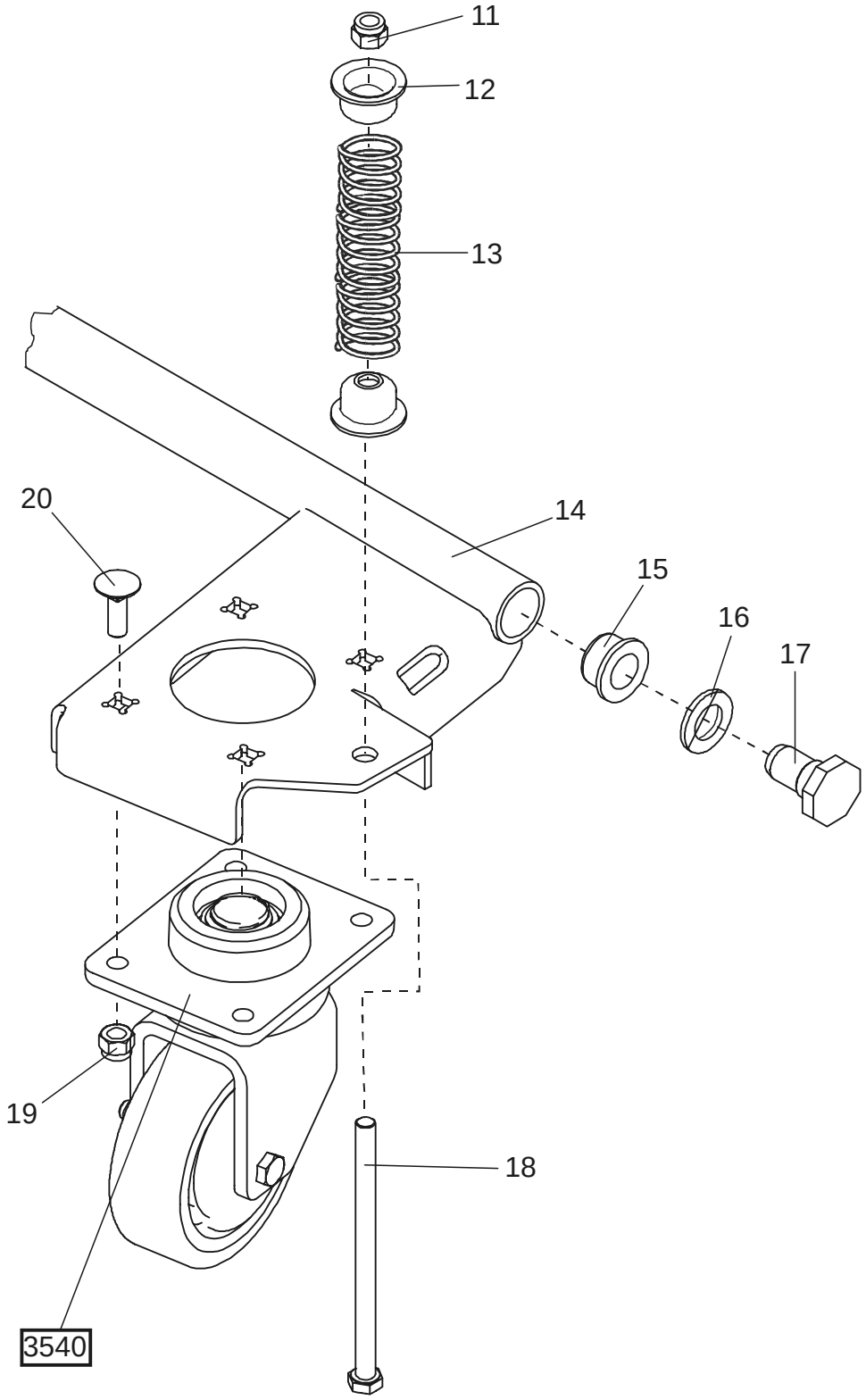

© TOYOTA Industrial Equipment Europe SARL Ancenis, France

3570-061 Wheel locating points

[2001-02-11]

Hjulinfästning/-upphängning; Radaufhängung; Point de fixation/suspension roues

			677 2 PM 18 678 2 PM 20 678 2 PM20N	406404 - 406404 - 406404 -
Pos	Description	Pcs	Part No	Note
11	Nut Mutter; Mutter; Ecrou	2	20130	
12	Guide Styrning; Steuerung; Guidage	4	134467	
13	Spring Fjäder; Feder; Ressort	2	134470	
14	Consol Konsol; Konsole; Console	1	178552	
15	Bush Bussning; Bague; Bague	2	140178	
16	Washer Bricka; Scheibe; Rondelle	2	28933	
17	Screw Skruv; Schraube; Vis	2	134468	
18	Screw Skruv; Schraube; Vis	2	22008	
19	Nut Mutter; Mutter; Ecrou	8	20130	
20	Screw Skruv; Schraube; Vis	8	29949	

© TOYOTA Industrial Equipment Europe SARL Ancenis, France

4110-181

P0013119

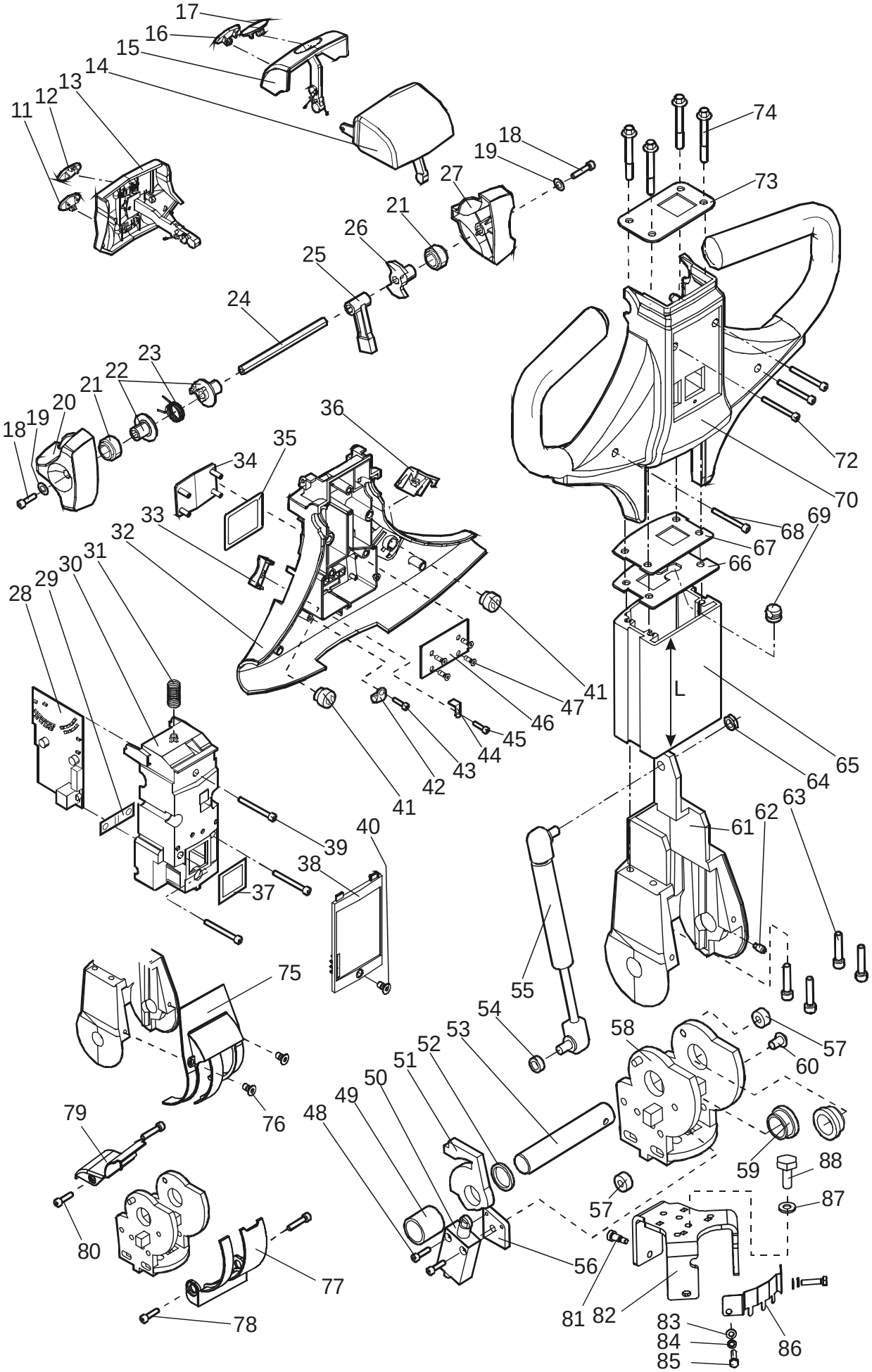

© TOYOTA Industrial Equipment Europe SARL Ancenis, France

4110-181 Steering arm / wheel / lever

[2000-11-09]

Styr- arm/ratt/spak; Deichsel, Lenkrad-hebel; Timon/volant/levier de direction

			677 2 PM 18 678 2 PM 20 678 2 PM20N	364690 - 364690 - 364690 -
Pos	Description	Pcs	Part No	Note
11	Symbol plate(Fork lower) Symbolplatta(Gaffelsänk); Zeichenplatte(Gabbelabsenkung); Plaque de symbole(Descente de la fourche)	1	171585-003	
12	Symbol plate(Fork lift) Symbolplatta(Gaffellyft); Zeichenplatte(Hubgabel); Plaque de symbole(Fourche élévation)	1	171585-004	
13	Push-button(Complete) Tryckknapp(Komplett); Druckknopf(Komplett); Bouton(Complet)	1	171666	Front Främre; Vordere; Avant
14	Push-button(Complete) Tryckknapp(Komplett); Druckknopf(Komplett); Bouton(Complet)	1	171664	Switch for safety reversing Brytare för säkerhetsreversering; Sicherheitsrücklaufschalter; Bouton rouge anti-écrasement
15	Push-button(Complete) Tryckknapp(Komplett); Druckknopf(Komplett); Bouton(Complet)	1	171665	upper övre; obere; supérieur
16	Symbol plate(No function) Symbolplatta(Ingen funktion); Zeichenplatte(keine Funktion); Plaque de symbole(aucune fonction)	1	171583	
17	Symbol plate(No function) Symbolplatta(Ingen funktion); Zeichenplatte(keine Funktion); Plaque de symbole(aucune fonction)	1	171583	
18	Screw Skruv; Schraube; Vis	2	171708	
19	Washer Bricka; Scheibe; Rondelle	2	171710	
20	Rocker(Left) Vippa(Vänster); Kippe(Links); Levier oscillant(Gauge)	1	167841	
21	Bearing Lager; Lager; Roulement	2	167846	
22	Support Hållare; Stossfänger; Absorber des chocs	2	167844	
23	Spring Fjäder; Feder; Ressort	1	167840	
24	Axle Axel; Achse; Axe	1	167843	
25	Arm Arm; Arm; Bras	1	167845	
26	Stop lug Stoppklack; Anschlagsstück; Arréter	1	167830	
27	Rocker(Right) Vippa(Höger); Kippe(Recht); Levier oscillant(Droit)	1	167842	
28	Electronic card Elektronikkort; Elektronikkarte; Carte électronique	1	167833-001	
28	Electronic card(Including software) Elektronikkort(Inklusive programvara); Elektronikkarte(Inklusive software); Carte électronique(Compris logiciel)	1	179927-101	
29	Spring Fjäder; Feder; Ressort	1	167839	
30	Housing Kåpa; Haus; Chape	1	167835	
31	Spring Fjäder; Feder; Ressort	1	167836	
32	Housing Kåpa; Haus; Chape	1	167822	
33	Push-button(Left) Tryckknapp(Vänster); Druckknopf(Links); Bouton(Gauge)	1	167848	Horn Signalhorn; Signal; Signal
34	Cap(Transparent plastic) Lock(Plastglas); Deckel(Organisches glass); Couvercle(Plastique transparent)	1	167823	
35	Sealing Tätning; Dichtung; Joint	1	169910	
36	Push-button(Right) Tryckknapp(Höger); Druckknopf(Recht); Bouton(Droit)	1	167847	Horn Signalhorn; Signal; Signal

© TOYOTA Industrial Equipment Europe SARL Ancenis, France

Pos	Description	Pcs	Part No	Note
37	Sealing Tätning; Dichtung; Joint	1	167850	
38	Cap Lock; Deckel; Couvercle	1	171659	
38	Cap(Incl. keypad) Lock(Inkl. tangentbord); Deckel(Inkl. Tastatur); Couvercle(Incl. Tablette à clefs)	1	171660	
39	Screw Skruv; Schraube; Vis	3	171707	
40	Screw Skruv; Schraube; Vis	1	171709	
41	Switch Brytare; Schalter; Rupteur	2	171655	
42	Cable tie Kablagehållare; Kabelabbinder; Frette de câblage	2	171734	
43	Screw Skruv; Schraube; Vis	2	171713	
44	Cable tie Kablagehållare; Kabelabbinder; Frette de câblage	2	171662	
45	Screw Skruv; Schraube; Vis	2	171712	
46	Display Display; Display; Display	1	167832-001	
47	Screw Skruv; Schraube; Vis	4	171711	
48	Screw Skruv; Schraube; Vis	2	20243	
49	Distance piece Distans; Distanz; Distance	1	169270-001	
50	Limit switch(Including arm) Gränslägesbrytare(Med arm); Grenzschalter(Mit arm); Limiteur de course(Avec bras)	1	169088	
51	Cam Nock; Nocken; Came	1	169258	
52	Distance piece Distans; Distanz; Distance	1	169270-002	
53	Axle Axel; Achse; Axe	1	169259	
54	Bush Bussning; Bague; Bague	1	169268	
55	Gas suspension Gasfjäder; Gasfederung; Suspension à gaz	1	153960-066	
56	Bracket Fäste; Halterung; Support	1	169267	
57	Rubber buffer Gummibuffert; Gummipuffer; tampon en caoutchouc	2	178105	
58	Yoke Ok; Joch; Manchon	1	168905	
59	Bush Bussning; Bague; Bague	2	140177	
60	Screw Skruv; Schraube; Vis	1	28970	
61	Bracket Fäste; Halterung; Support	1	169253	
62	Stop screw Stoppskruv; Einstellschraube; Vis de arretoire	1	173418	
63	Screw Skruv; Schraube; Vis	4	171342	
64	Nut Mutter; Mutter; Ecrou	1	21110	
65	Section Profil; Profil; Section	1	169254-002	L = 260 mm
66	Plate Plåt; Platte; Plaque	1	169249	
67	Plate Plåt; Platte; Plaque	1	169255	

© TOYOTA Industrial Equipment Europe SARL Ancenis, France

Pos	Description	Pcs	Part No	Note
68	Screw Skruv; Schraube; Vis	2	171705	
69	Conduit entry Kabelgenomföring; Kabeldurchgang; Traversée de câble	1	171409	
70	Handle Handtag; Handgriff; Poignée.	1	167821	
72	Screw Skruv; Schraube; Vis	2	171706	
73	Plate Plåt; Platte; Plaque	1	169248	
74	Screw Skruv; Schraube; Vis	4	171403	
75	Protection Skydd; Schutz; Protéege	1	169271	
76	Screw Skruv; Schraube; Vis	2	171823	
77	Protection Skydd; Schutz; Protéege	1	169272	
78	Screw Skruv; Schraube; Vis	2	28970	
79	Protection Skydd; Schutz; Protéege	1	169283	
80	Screw Skruv; Schraube; Vis	2	28970	
81	Screw Skruv; Schraube; Vis	1	28518	
82	Bracket Fäste; Halterung; Support	1	177316	
83	Washer Bricka; Scheibe; Rondelle	2	20404	
84	Washer Bricka; Scheibe; Rondelle	4	126723-003	
85	Screw Skruv; Schraube; Vis	2	177637	
86	Bracket Fäste; Halterung; Support	1	178974	
87	Washer Bricka; Scheibe; Rondelle	4	126723-006	
88	Screw Skruv; Schraube; Vis	2	20109	

© TOYOTA Industrial Equipment Europe SARL Ancenis, France

4180-020

P0013830

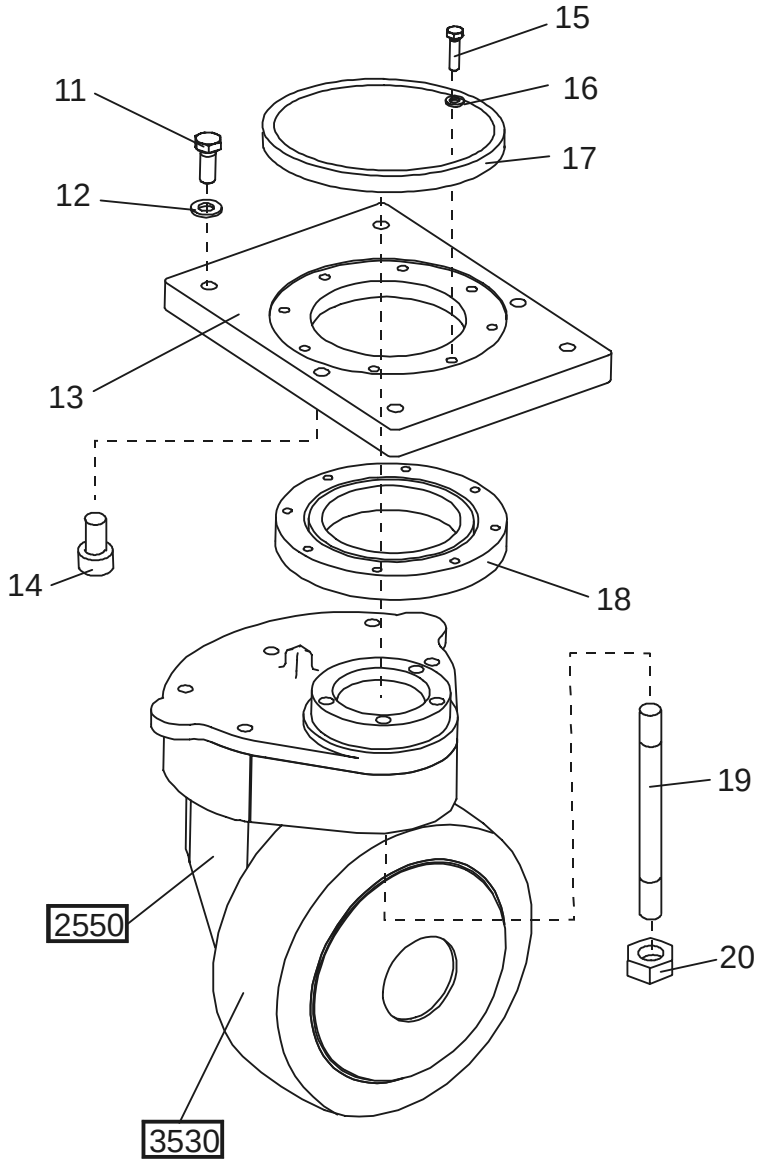

© TOYOTA Industrial Equipment Europe SARL Ancenis, France

4180-020 Steering bearings, radial bearing

[2001-02-12]

Styrlagring/-krans ; Führungslagerung, Lenkkranz; Paliers de direction, paliers radials

			677 2 PM 18 678 2 PM 20 678 2 PM20N	406404 - 406404 - 406404 -
Pos	Description	Pcs	Part No	Note
11	Screw Skruv; Schraube; Vis	4	20002	
12	Washer Bricka; Scheibe; Rondelle	4	21394	
13	Motor bracket Motorfäste; Motorhalterung; Moteur de Support	1	173558	
14	Screw Skruv; Schraube; Vis	2	20651	
15	Screw Skruv; Schraube; Vis	8	20532	
16	Washer Bricka; Scheibe; Rondelle	8	20375	
17	Sealing Tätning; Dichtung; Joint	1	28070	
18	Ball bearing Kullager; Kugellager; Roulement a billes	1	180189	
19	Screw Skruv; Schraube; Vis	4	27216	
20	Nut Mutter; Mutter; Ecrou	4	20016	

© TOYOTA Industrial Equipment Europe SARL Ancenis, France

5160-031

P0011308

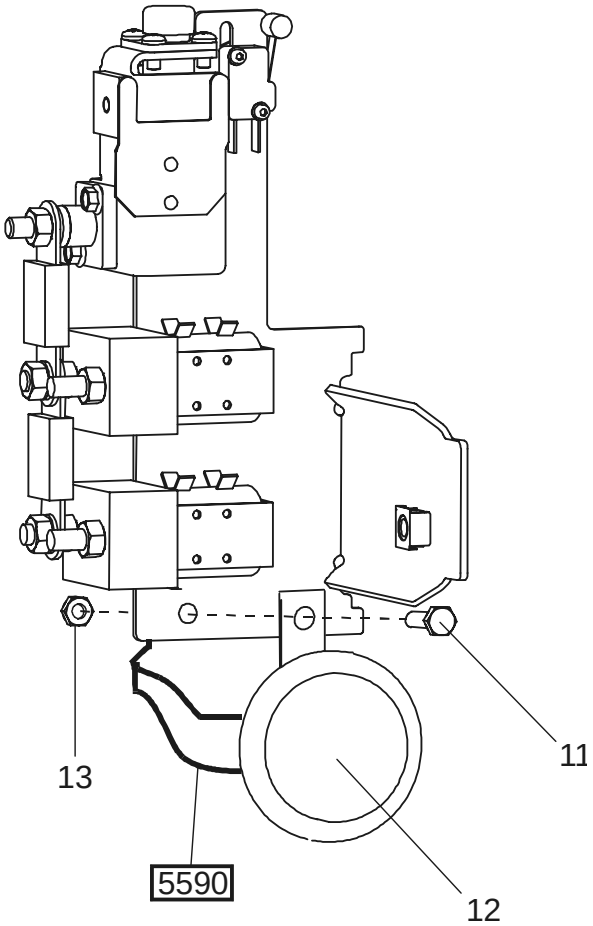

5160-031 General alarm signals (audible/visual)

[2001-01-29]

Signal/larm (ljud-/ljus-); Warn-/Alarmsignale (Aukust./Opt.); Avertisseur (sonore/lumineux), dispositifs d'alarme

			677 2 PM 18 678 2 PM 20 678 2 PM20N	364690 - 364690 - 364690 -
Pos	Description	Pcs	Part No	Note
11	Screw Skruv; Schraube; Vis	1	20078	
12	Horn Signalhorn; Signalhorn; Avertisseur	1	170729	
13	Nut Mutter; Mutter; Ecrou	1	20016	

© TOYOTA Industrial Equipment Europe SARL Ancenis, France

© TOYOTA Industrial Equipment Europe SARL Ancenis, France

5190-028

P0011307

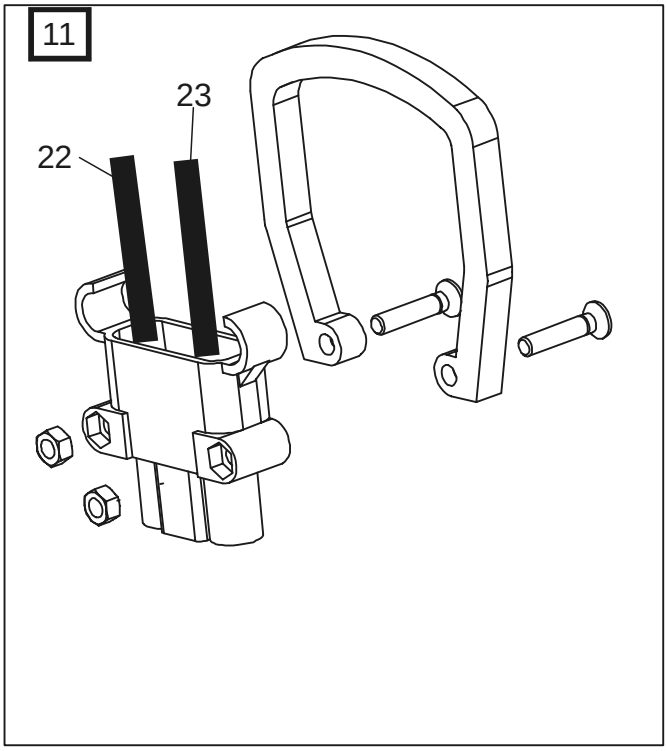

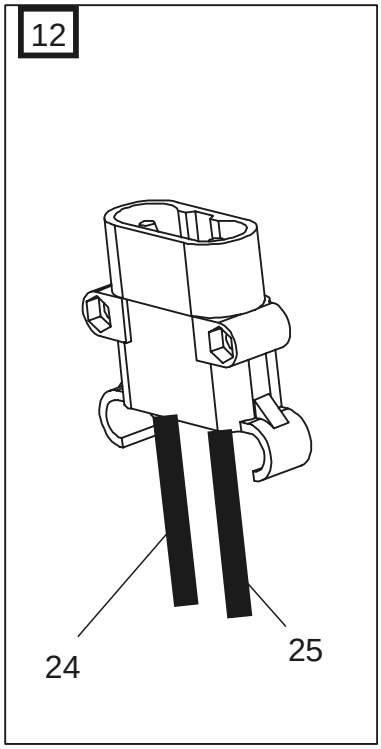

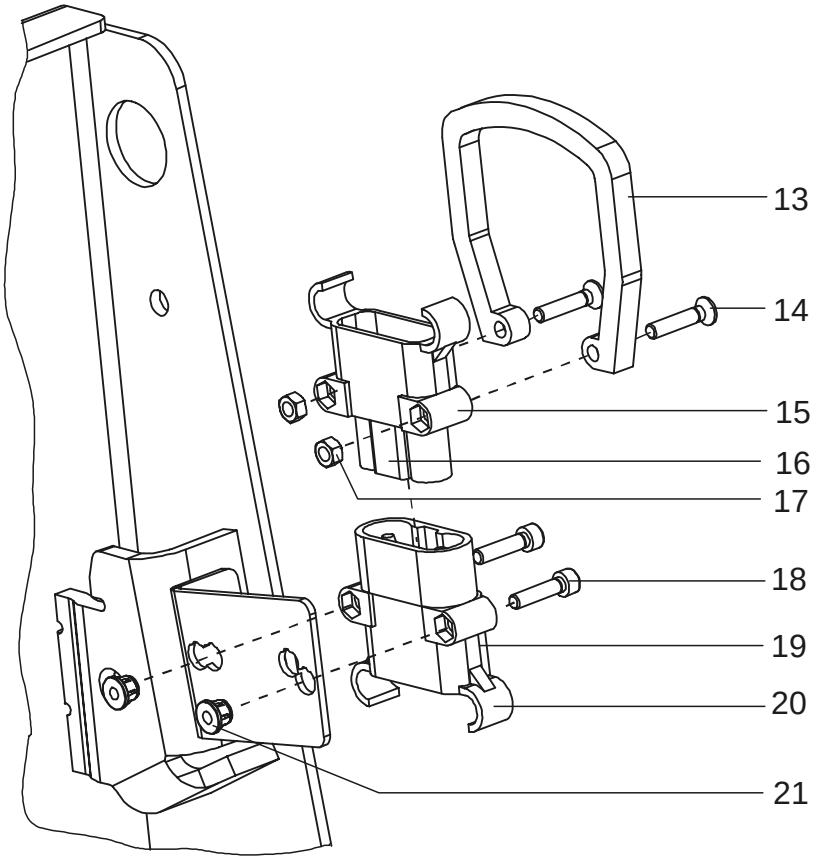

© TOYOTA Industrial Equipment Europe SARL Ancenis, France

5190-028 Battery cut out connector/contactor [1999-11-07]

Batterifrånskiljare, huvudkontaktor; Batterietrennung, Hauptkontaktor; Coupe-circuit de batterie, contacteur

			677 2 PM 18 678 2 PM 20 678 2 PM20N	364690 - 364690 - 364690 -
Pos	Description	Pcs	Part No	Note
11	Battery connector with cable cpl. Batterihandske med kabel kpl.; Stromstecker mit Kabel Kpl; Bloc de connextion avec câble cpl.	1	172443	Battery Batteri; Batterie; Batterie
12	Battery connector with cable cpl. Batterihandske med kabel kpl.; Stromstecker mit Kabel Kpl; Bloc de connextion avec câble cpl.	1	172442	
13	Handle Handtag; Handgriff; Poignée.	1	171686	
14	Screw Skruv; Schraube; Vis	2	29985	
15	Connector Handske; Stecker; Bloc de connexion	1	171680	
16	Gender key Kodpinne; Code-Stift; Code-goupille	1	171703-002	
17	Nut Mutter; Mutter; Ecrou	2	20433	
18	Screw Skruv; Schraube; Vis	2	20224	
19	Gender key Kodpinne; Code-Stift; Code-goupille	1	171703-001	
20	Connector Handske; Stecker; Bloc de connexion	1	171681	
21	Nut Mutter; Mutter; Ecrou	2	172413	
22	Cable(+) Kabel; Kabel; Câble	1	172425	
23	Cable(-) Kabel; Kabel; Câble	1	172426	
24	Cable(1) Kabel; Kabel; Câble	1	172427	
25	Cable(40) Kabel; Kabel; Câble	1	172428	

© TOYOTA Industrial Equipment Europe SARL Ancenis, France

5190-029

P0012438

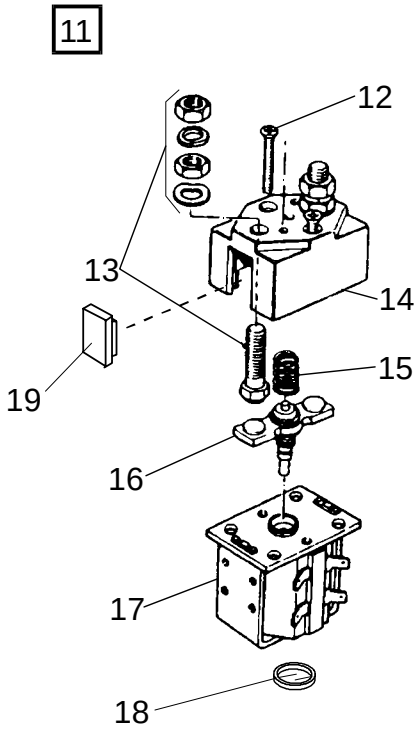

© TOYOTA Industrial Equipment Europe SARL Ancenis, France

5190-029 Battery cut out connector/contactor

[2000-07-12]

Batterifrånskiljare, huvudkontaktor; Batterietrennung, Hauptkontaktor; Coupe-circuit de batterie, contacteur

			677 2 PM 18 678 2 PM 20 678 2 PM20N	364690 - 364690 - 364690 -
Pos	Description	Pcs	Part No	Note
11	Contactor compl. Kontaktor kompl.; Kontaktor kompl.; Contacteur compl.	1	177911	
12	Screw Skruv; Schraube; Vis	2	154549	
13	Fixed contact(Complete) Fast kontakt(Komplett); Fester Kontakt(Komplett); Contact fixé(Complet)	2	173916	
14	Housing Kåpa; Haus; Chape	1	154550	
15	Spring Fjäder; Feder; Ressort	1	161484	
16	Contact Kontakt; Kontakt; Contact	1	173917	
17	Magnetic coil Magnetspole; Magnetspule; Bobine électrique	1	173918	
18	Housing Kåpa; Haus; Chape	1	165416	
19	Housing Kåpa; Haus; Chape	1	177914	

© TOYOTA Industrial Equipment Europe SARL Ancenis, France

5190-039

P0012722

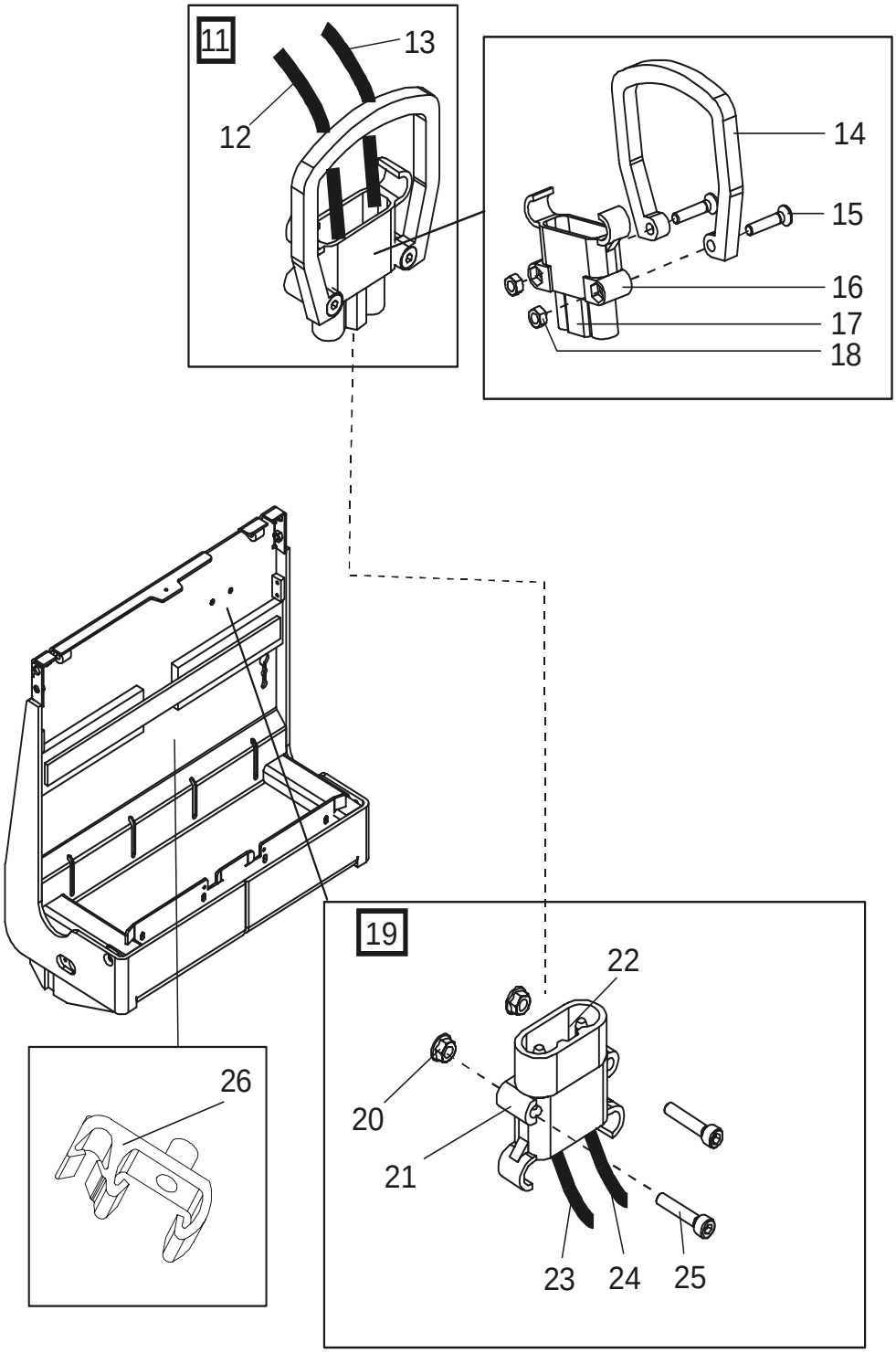

© TOYOTA Industrial Equipment Europe SARL Ancenis, France

5190-039 Battery cut out connector/contactor [2000-09-08]

Batterifrånskiljare, huvudkontaktor; Batterietrennung, Hauptkontaktor; Coupe-circuit de batterie, contacteur

			677 2 PM 18 678 2 PM 20 678 2 PM20N	364690 - 364690 - 364690 -
Pos	Description	Pcs	Part No	Note
11	Battery connector with cable complete(Battery) Batterihandske med kabel komplett(Batteri); Stromstecker mit Kabel komplett(Batterie); Connection fiche avec câble complete(Batterie)	1	174744	Battery Batteri; Batterie; Batterie
12	Cable(+) Kabel; Kabel; Câble	1	172425	
13	Cable(-) Kabel; Kabel; Câble	1	172426	
14	Handle Handtag; Handgriff; Poignée.	1	171686	
15	Screw Skruv; Schraube; Vis	2	29985	
16	Connector Handske; Stecker; Bloc de connexion	1	171680	
17	Gender key Kodpinne; Code-Stift; Code-goupille	1	171703-002	
18	Nut Mutter; Mutter; Ecrou	2	20433	
19	Battery connector with cable complete Batterihandske med kabel komplett; Stromstecker mit Kabel komplett; Connection fiche avec câble complete	1	174743	
20	Nut Mutter; Mutter; Ecrou	2	172413	
21	Connector Handske; Stecker; Bloc de connexion	1	171681	
22	Gender key Kodpinne; Code-Stift; Code-goupille	1	171703-001	
23	Cable(40) Kabel; Kabel; Câble	1	174742	
24	Cable(1) Kabel; Kabel; Câble	1	174741	
25	Screw Skruv; Schraube; Vis	2	20750	
26	Clamp Klamma; Rohrschelle; Collier	3	138966	

© TOYOTA Industrial Equipment Europe SARL Ancenis, France

5310-045

P0011358

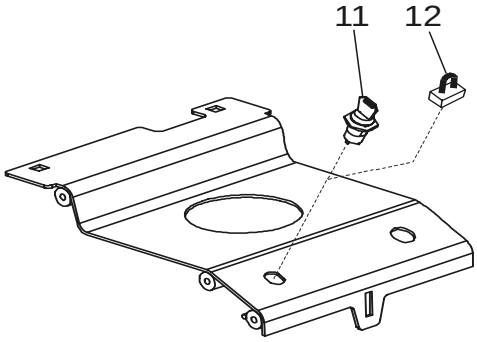

5310-045 Start/stop switch

[2001-02-12]

Start/stoppströmställare; Schalter Fahren/Anhalten; Interrupteur (coupe-circuit) démarrage/arrêt

			677 2 PM 18 678 2 PM 20 678 2 PM20N	364690 - 364690 - 364690 -
Pos	Description	Pcs	Part No	Note
11	Ignition switch Startlås; Zündschloss; Contact-démarreur	1	171653	
12	Clamp(cable) Bygel(Kabel); Bügel(Seil); Bride(câble)	1	176834	

© TOYOTA Industrial Equipment Europe SARL Ancenis, France

5460-032

P0012482

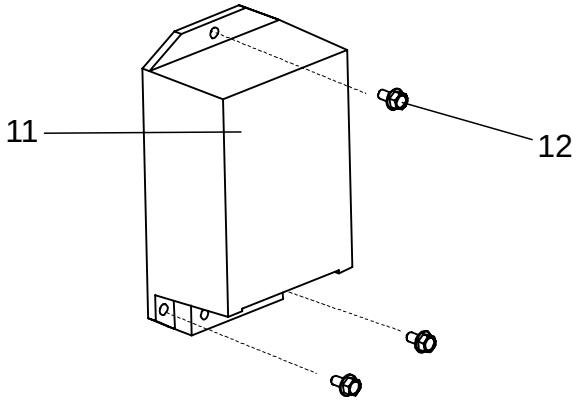

5460-032 Transistor panel

[2000-07-17]

Transistorpanel ; Transistorpanel; Panneau transistor

			677 2 PM 18 678 2 PM 20 678 2 PM20N	364690 - 364690 - 364690 -
Pos	Description	Pcs	Part No	Note
11	Transistor controller Transistorregulator; Transistorregulator; Regulateur des transistors	1	169071-002	
12	Screw Skruv; Schraube; Vis	3	28858	

© TOYOTA Industrial Equipment Europe SARL Ancenis, France

5590-033

P0013827

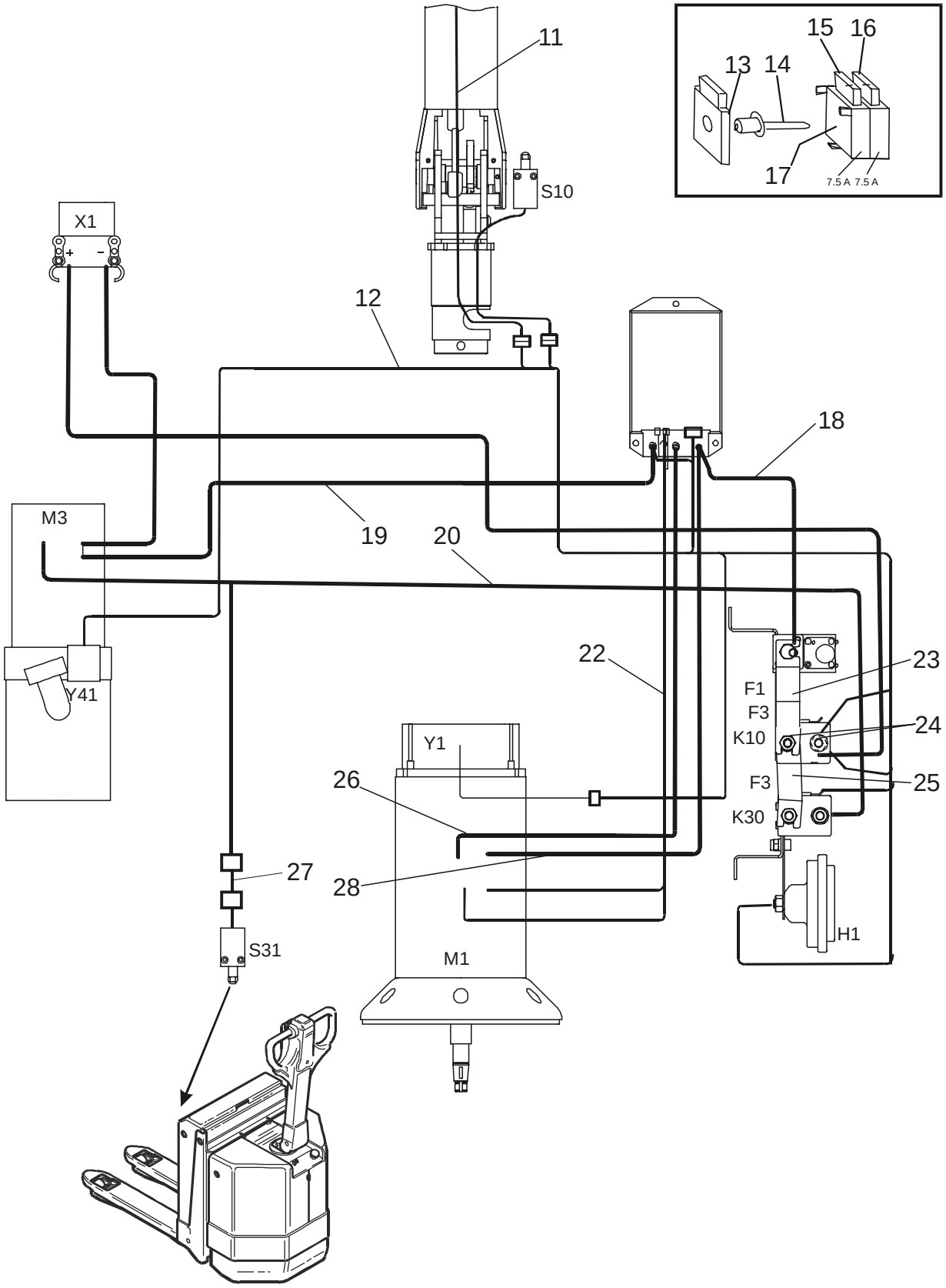

© TOYOTA Industrial Equipment Europe SARL Ancenis, France

5590-033 Work function harnesses/ fuse

[2001-02-11]

Arbetsfunktionskablage/ -säkring; Steurstromverkabelung/ -Sicherung; Câblage/ fusible fonction de travail

			677 2 PM 18 678 2 PM 20 678 2 PM20N	406404 - 406404 - 406404 -
Pos	Description	Pcs	Part No	Note
11	Wiring harness Kablage; Kabelsatz; Câblage	1	169083	
12	Wiring harness(Main) Kablage(Huvud); Kabelsatz(Haubt); Câblage(Principal)	1	180127	
13	Bracket Fäste; Halterung; Support	1	135422	
14	Nit Nit; Niet; Rivet	1	28959	
15	Fuse(7,5A) Säkring; Sicherung; Fusible	1	122308-075	
16	Fuse(7,5A) Säkring; Sicherung; Fusible	1	122308-075	
17	Fuse holder Säkringshållare; Sicherungshalter; Porte-fusibles	1	135421	
18	Cable(3) Kabel; Kabel; Câble	1	172441	
19	Cable Kabel; Kabel; Câble	1	172424	
20	Cable(10) Kabel; Kabel; Câble	1	172429	
22	Wiring harness Kablage; Kabelsatz; Câblage	1	172643	
23	Fuse(125 A) Säkring; Sicherung; Fusible	1	173172-125	
24	Nut Mutter; Mutter; Ecrou	5	20016	
25	Fuse(125 A) Säkring; Sicherung; Fusible	1	173172-125	
26	Cable Kabel; Kabel; Câble	1	175312	
27	Wiring harness Kablage; Kabelsatz; Câblage	1	175123	Cold stores Fryshus; Gefrieranlage; Chambre frigorifique
28	Cable Kabel; Kabel; Câble	1	175313	

© TOYOTA Industrial Equipment Europe SARL Ancenis, France

5610-014

P0011335

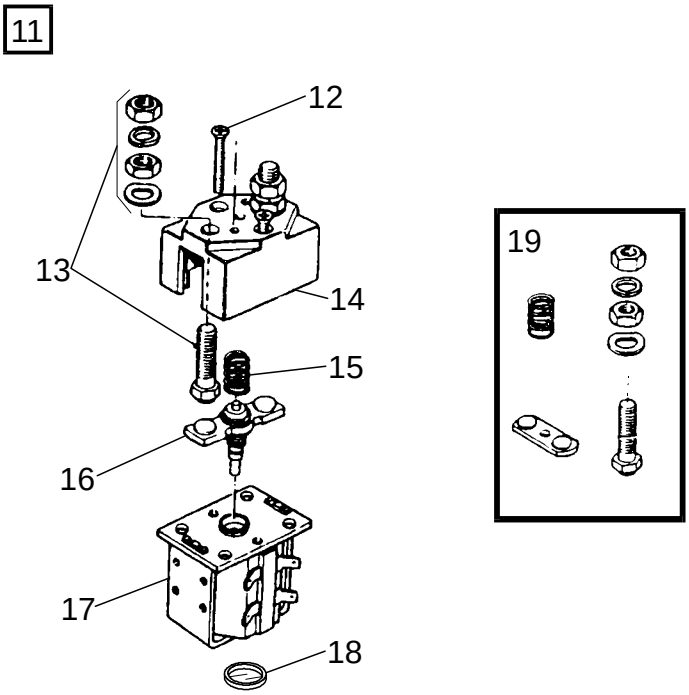

5610-014 Pump contactor

[2001-03-16]

Pumpkontaktor; Pumpenmotorkontaktor; Contacteur (moteur) de pompe

			677 2 PM 18 678 2 PM 20 678 2 PM20N	364690 - 364690 - 364690 -
Pos	Description	Pcs	Part No	Note
11	Contactor Kontaktor; Kontaktor; Contacteur	1	154548	
12	Screw Skruv; Schraube; Vis	2	154549	
13	Fixed contact(Complete) Fast kontakt(Komplett); Fester Kontakt(Komplett); Contact fixé(Complet)	2	154551	
14	Housing Kåpa; Haus; Chape	1	154550	
15	Spring Fjäder; Feder; Ressort	1	154552	
16	Contact Kontakt; Kontakt; Contact	1	154553	
17	Magnetic coil Magnetspole; Magnetspule; Bobine électrique	1	154554	
18	Housing Kåpa; Haus; Chape	1	165416	
19	Contact set Kontaktsats; Kontaktsatz; Jeux de contact	1	169214	

© TOYOTA Industrial Equipment Europe SARL Ancenis, France

5820-018

P0011309

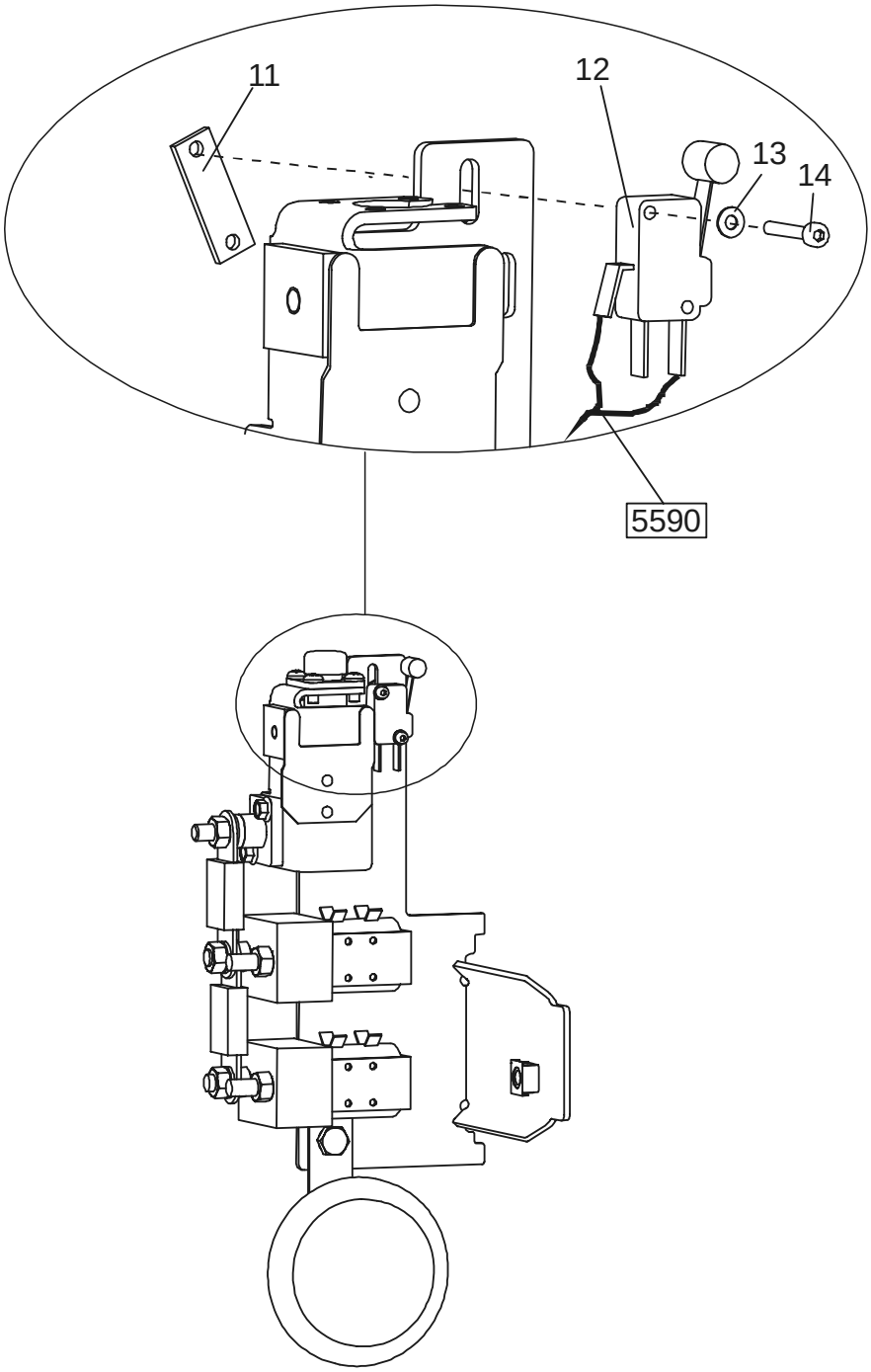

5820-018 Lift/lowering/reach movment probes/sensors

[1999-11-07]

Lyft-/sänk-/skjutrörelse-givare/-sensor; Hub-/Senk-/Schubgeber/-sensor; Capteurs de levage/descente/rétraction

			677 2 PM 18 678 2 PM 20 678 2 PM20N	364690 - 364690 - 364690 -
Pos	Description	Pcs	Part No	Note
11	Nut(Plate) Mutter(Plåt); Mutter(Platte); Ecrou(Plaque)	1	74400	
12	Micro switch Mikrobrytare; Mikroschalter; Interrupteurs	1	156280	
13	Washer Bricka; Scheibe; Rondelle	2	21392	
14	Screw Skruv; Schraube; Vis	2	21438	

© TOYOTA Industrial Equipment Europe SARL Ancenis, France

5820-019 P0011313

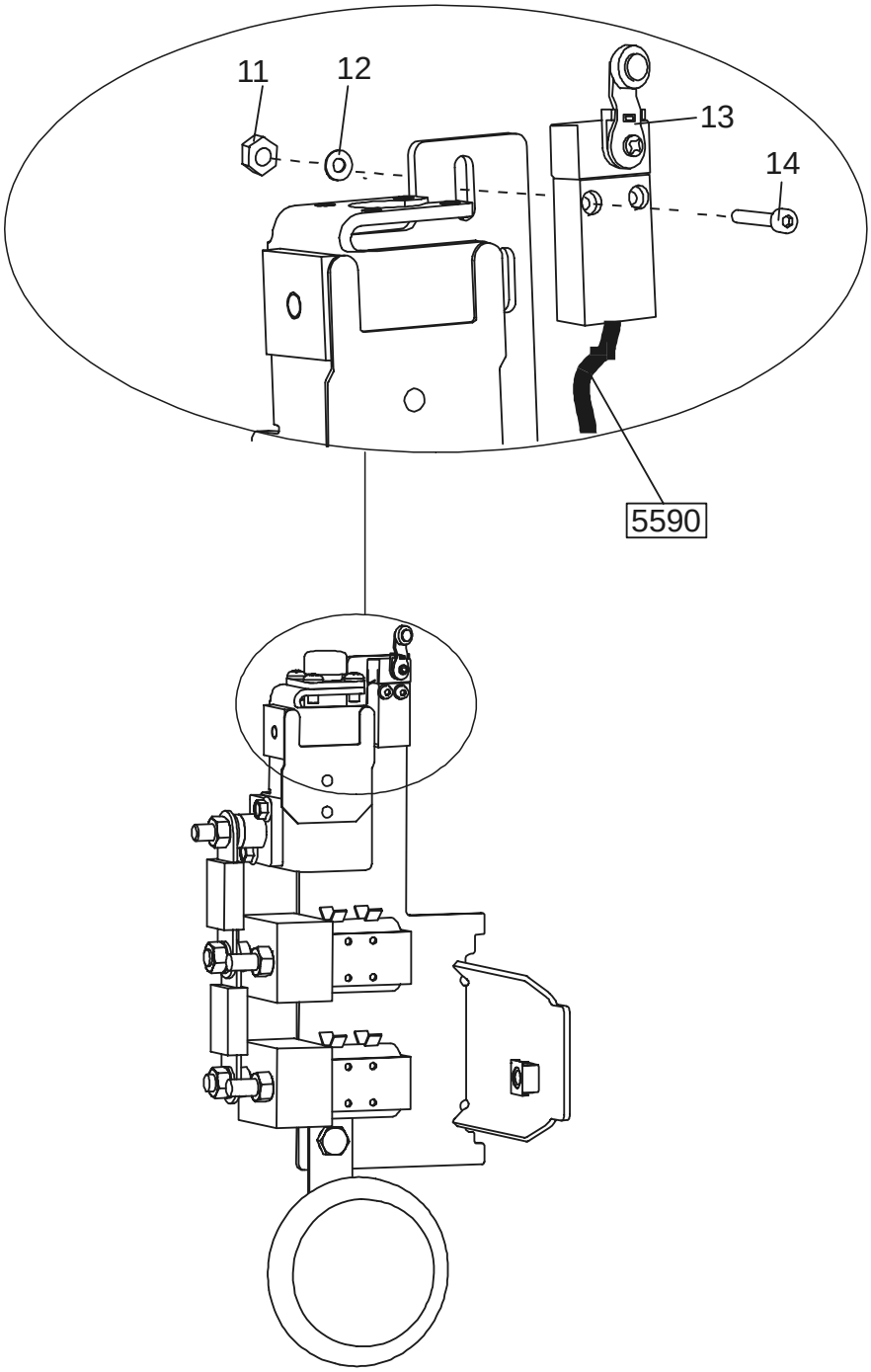

5820-019 Lift/lowering/reach movment probes/sensors [1999-11-08]

Lyft-/sänk-/skjutrörelse-givare/-sensor; Hub-/Senk-/Schubgeber/-sensor; Capteurs de levage/descente/rétraction

Cold stores; Fryshus; Gefrieranlage; Chambre frigorifique			677 2 PM 18 678 2 PM 20 678 2 PM20N	364690 - 364690 - 364690 -
Pos	Description	Pcs	Part No	Note
11	Nut Mutter; Mutter; Ecrou	2	25699	
12	Washer Bricka; Scheibe; Rondelle	2	21035	
13	Switch Brytare; Schalter; Rupteur	1	176598	
14	Screw Skruv; Schraube; Vis	2	21568	

© TOYOTA Industrial Equipment Europe SARL Ancenis, France

5830-043

P0011357

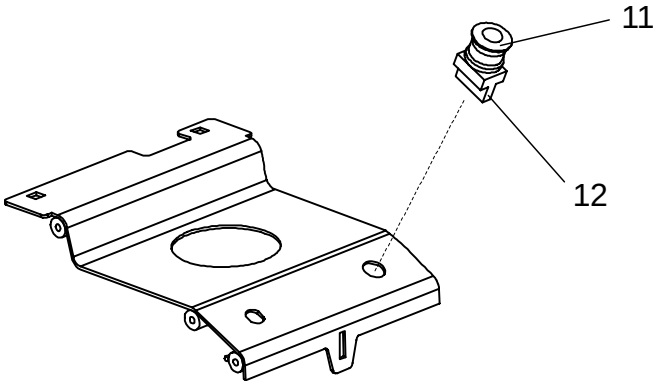

5830-043 Safety probes/ sensors

[1999-11-13]

Säkerhets-givare/-sensorer; Sicherheitsgeber/-sensor; Capteurs de sécurité

			677 2 PM 18 678 2 PM 20 678 2 PM20N	364690 - 364690 - 364690 -
Pos	Description	Pcs	Part No	Note
11	Push-button(Red) Tryckknapp(Röd); Druckknopf(Rot); Bouton(Rouge)	1	155567	
12	Contact device Kontaktblock; Kontakteinheit; Unite de contact	1	155568	

© TOYOTA Industrial Equipment Europe SARL Ancenis, France

6100-059

P0011273

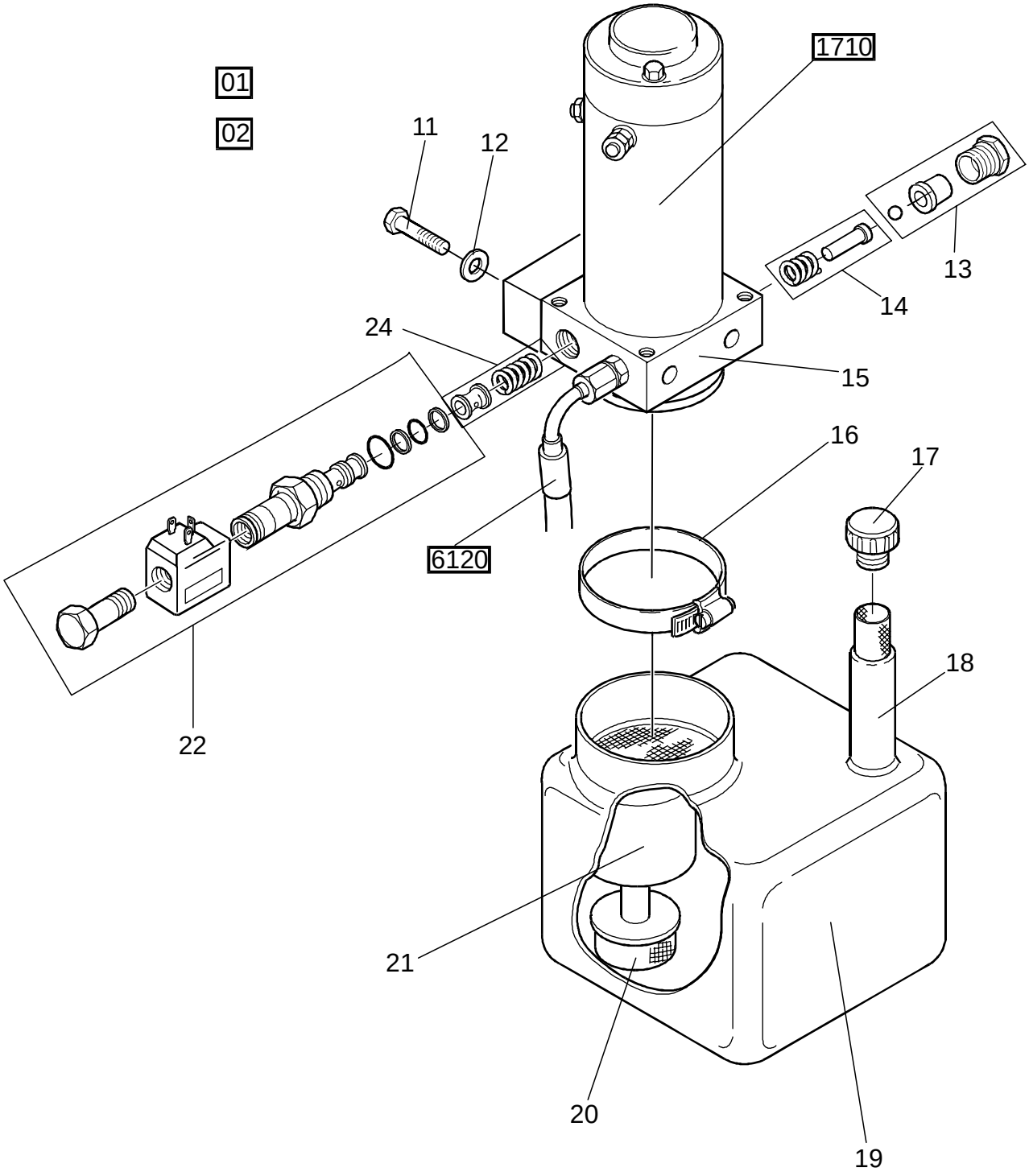

© TOYOTA Industrial Equipment Europe SARL Ancenis, France

6100-059 Hydraulic unit

[1999-10-28]

Hydraulaggregat; Hydraulikaggregat; Unité hydraulique

			677 2 PM 18	364690 -
Pos	Description	Pcs	Part No	Note
01	Pump unit compl. Pumpenhet kompl.; Pumpeinheit kompl.; Unite de pompe compl.	1	163846	
02	Packing set Packningssats; Packungssatz; Jeux d´ étanchéite.	1	163860	
11	Screw Skruv; Schraube; Vis	2	20044	
12	Washer Bricka; Scheibe; Rondelle	2	21393	
13	Non return valve Backventil; Rückschlagklappe; Clapet de retenue	1	163857	
14	Pressure reducing valve Tryckbegränsningsventil; Druckreduzierventil; Soupape de réglage de pression	1	163856	
15	Valve unit Ventilblock; Ventileinheit; Soupape unit	1	163855	
16	Clamp Klamma; Rohrschelle; Collier	1	163852	
17	Cap Lock; Deckel; Couvercle	1	163854	
18	Filler tube Påfyllningsrör; Füllstutzen; Tuyau de remplissage	1	163851	
19	Tank Tank; Behälter; Reservoir	1	163850	
20	Filter Filter; Filter; Filtre	1	163853	
21	Pump Pump; Pump; Pumpe	1	163847	
22	Magnet valve Magnetventil; Magnetventil; Distributeur électromagnétique	1	163858	
24	Valve Ventil; Ventil; Soupape	1	163861	

© TOYOTA Industrial Equipment Europe SARL Ancenis, France

6100-060

P0011302

01

02

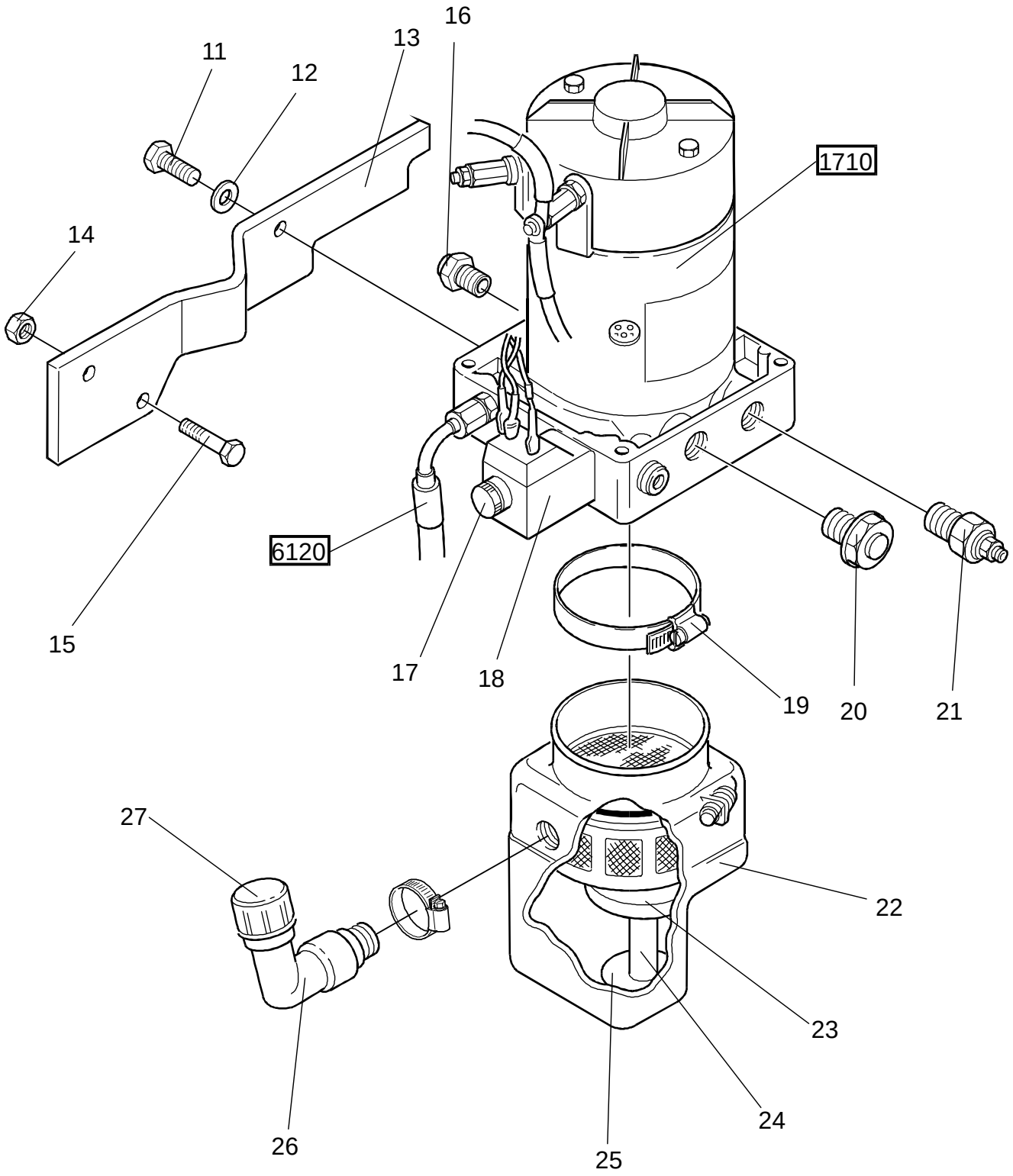

© TOYOTA Industrial Equipment Europe SARL Ancenis, France

6100-060 Hydraulic unit

[1999-11-07]

Hydraulaggregat; Hydraulikaggregat; Unité hydraulique

			678 2 PM 20 678 2 PM20N	364690 - 364690 -
Pos	Description	Pcs	Part No	Note
01	Pump unit compl. Pumpenhet kompl.; Pumpeinheit kompl.; Unite de pompe compl.	1	166074	
02	Packing set Packningssats; Packungssatz; Jeux d´ étanchéite.	1	148312	
11	Screw Skruv; Schraube; Vis	2	20002	
12	Washer Bricka; Scheibe; Rondelle	4	21394	
13	Bracket Fäste; Halterung; Support	1	146793	
14	Nut Mutter; Mutter; Ecrou	2	20130	
15	Screw Skruv; Schraube; Vis	2	28308	
16	Non return valve Backventil; Rückschlagklappe; Clapet de retenue	1	143374	
17	Valve(Magnet) Ventil(Magnet); Ventil(Magnet); Soupape(Magnétique)	1	143371	
18	Coil Spole; Spule; Bobine	1	143372	
19	Clamp Klamma; Rohrschelle; Collier	1	143381	
20	Valve Ventil; Ventil; Soupape	1	149572-009	
21	Pressure reducing valve Tryckbegränsningsventil; Druckreduzierventil; Soupape de réglage de pression	1	166076	
22	Tank Tank; Behälter; Reservoir	1	166075	
23	Pump Pump; Pump; Pumpe	1	129666	
24	Filter(Complete) Filter(Komplett); Filter(Komplett); Filtre(Complet)	1	167328	
25	Filter Filter; Filter; Filtre	1	143382	
26	Filler tube(Complete) Påfyllningsrör(Komplett); Füllstutzen(Komplett); Tuyau de remplissage(Complet)	1	167327	
27	Cap Lock; Deckel; Couvercle	1	143380	

© TOYOTA Industrial Equipment Europe SARL Ancenis, France

6120-165

P0012435

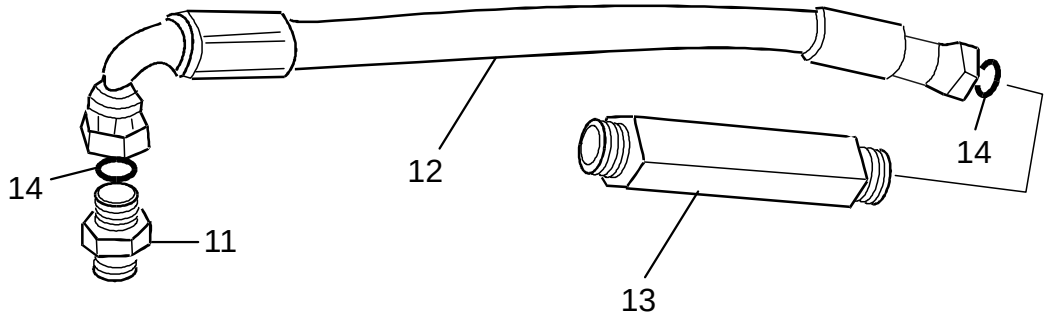

6120-165 Hydraulic tank lines

[2000-07-12]

Tankhydraulledningar; Hydrauliktankleitungen; Tuyaux réservoir hydraulique

			677 2 PM 18	406404 -
Pos	Description	Pcs	Part No	Note
11	Connection Koppling; Kupplung; Raccord	1	28782	
12	Hose Slang; Schlauch; Tuyau flexible	1	163943	
13	Connection Koppling; Kupplung; Raccord	1	134696	
14	O-ring O-ring; O-ring; Joint torique	2	29389	

6120-166

P0012436

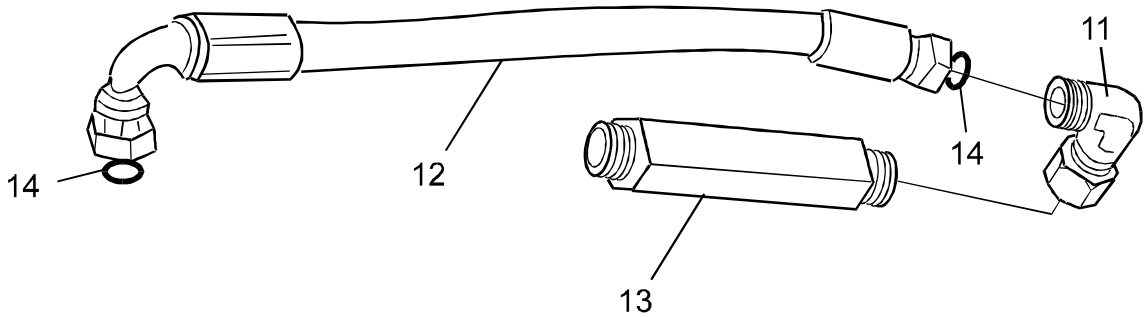

6120-166 Hydraulic tank lines

[2000-07-12]

Tankhydraulledningar; Hydrauliktankleitungen; Tuyaux réservoir hydraulique

			678 2 PM 20 678 2 PM20N	364690 - 364690 -
Pos	Description	Pcs	Part No	Note
11	Connection Koppling; Kupplung; Raccord	1	28785	
12	Hose Slang; Schlauch; Tuyau flexible	1	166072	
13	Connection Koppling; Kupplung; Raccord	1	134696	
14	O-ring O-ring; O-ring; Joint torique	2	29389	

© TOYOTA Industrial Equipment Europe SARL Ancenis, France

6610-036

P0011252

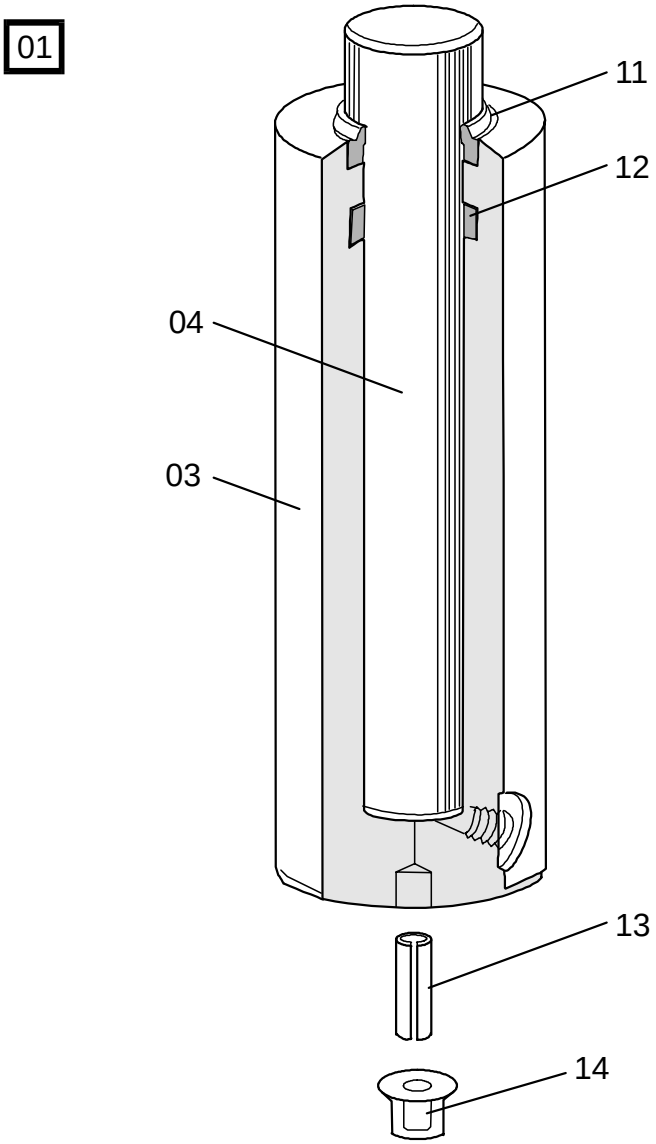

6610-036 Main lift cylinders

[1999-10-26]

Huvudlyftcylindrar; Haupthubzylinder; Vérin de levage, principal

			677 2 PM 18 678 2 PM 20 678 2 PM20N	364690 - 364690 - 364690 -
Pos	Description	Pcs	Part No	Note
01	Cylinder compl. Cylinder kompl.; Zylinder kompl.; Verin compl.	1	134508	
03	Cylinder pipe Cylinderrör; Zylinderrohr; Tube de cylindre	1	134509	
04	Piston Kolv; Kolben; Piston	1	134510	
11	Scraper Avskrapare; Abkratzer; Segment racleur	1	20911	
12	U-ring Spårringsmanchett; Schliesringsmanchette; Joint en U	1	28865	
13	Locking pin Spännstift; Spannstift; Goupille	1	28923	
14	Guide Styrning; Steuerung; Guidage	1	134478	

© TOYOTA Industrial Equipment Europe SARL Ancenis, France

9400-054

P0013124

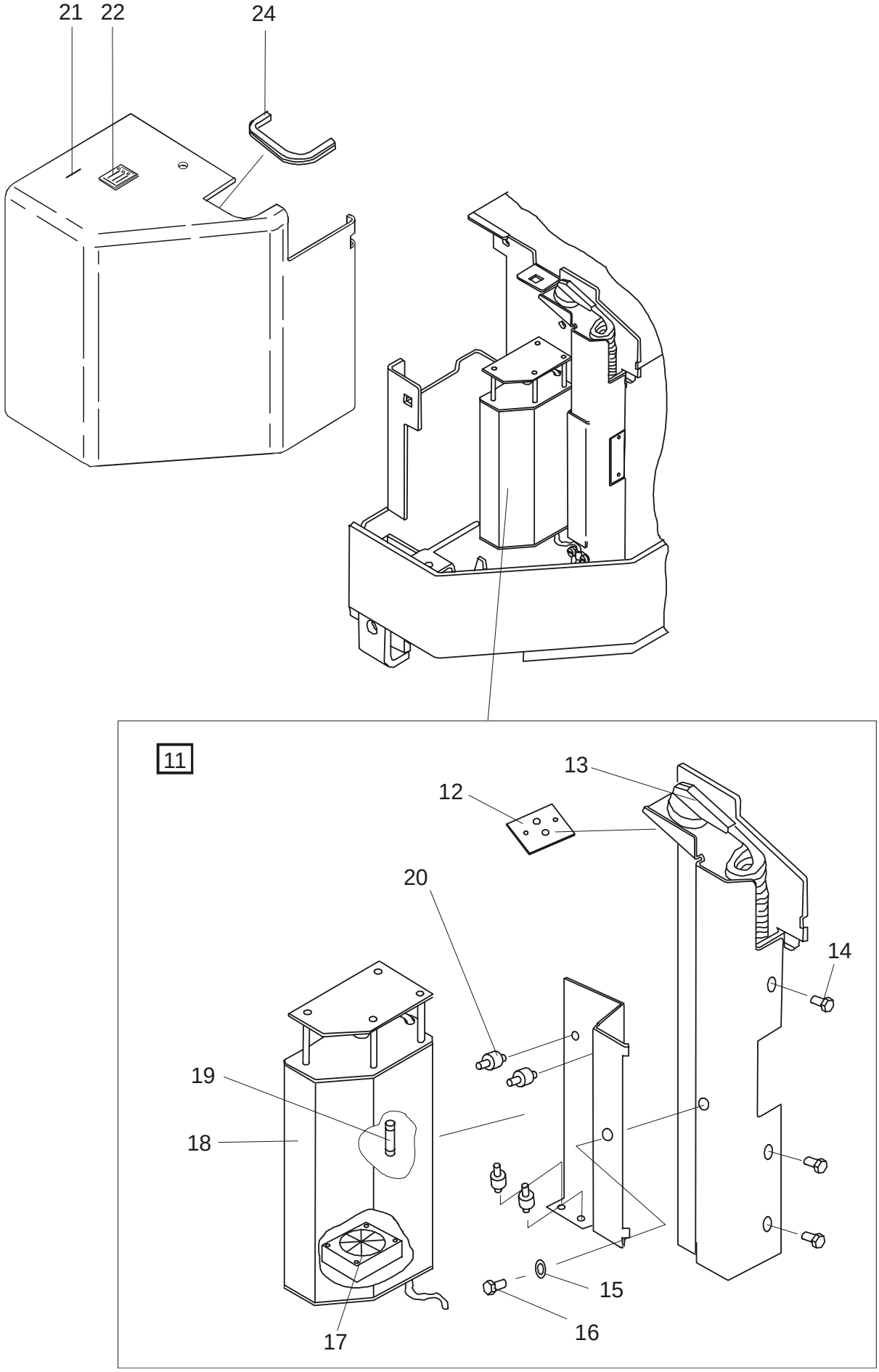

© TOYOTA Industrial Equipment Europe SARL Ancenis, France

9400-054 Extra electrical equipment

[2001-03-01]

Extra elektrisk utrustning; Elektrische Zusatzausrüstung ; Equipement électrique supplémentaire

			677 2 PM 18 678 2 PM 20 678 2 PM20N	364690 - 364690 - 364690 -
Pos	Description	Pcs	Part No	Note
11	Battery charger(Complete) Batteriladdare(Komplett); Batterieladevorrichtung(Komplett); Chargeur (batterie)(Complet)	1	175194	
12	Contact Kontakt; Kontakt; Contact	1	177322	
13	Wiring harness Kablage; Kabelsatz; Câblage	1	164872	
14	Screw Skruv; Schraube; Vis	3	28835	
15	Washer Bricka; Scheibe; Rondelle	1	20375	
16	Screw Skruv; Schraube; Vis	1	21503	
17	Fan Fläkt; Kühlgebläse; Ventilateur	1	164871	
18	Battery charger Batteriladdare; Batterieladevorrichtung; Chargeur (batterie)	1	164870-001	
19	Fuse(6,3 A) Säkring; Sicherung; Fusible	1	28302	
20	Distance piece Distans; Distanz; Distance	4	27022	
21	Cover(Orange) Huv; Haube; Capot	1	175019-031	
22	Sign Skylt; Schild; Vignette	1	164927	
24	List(Meter) List(Meter); Leiste(Meter); Bande(Metre)	1	21762	

© TOYOTA Industrial Equipment Europe SARL Ancenis, France

9400-055

P0013126

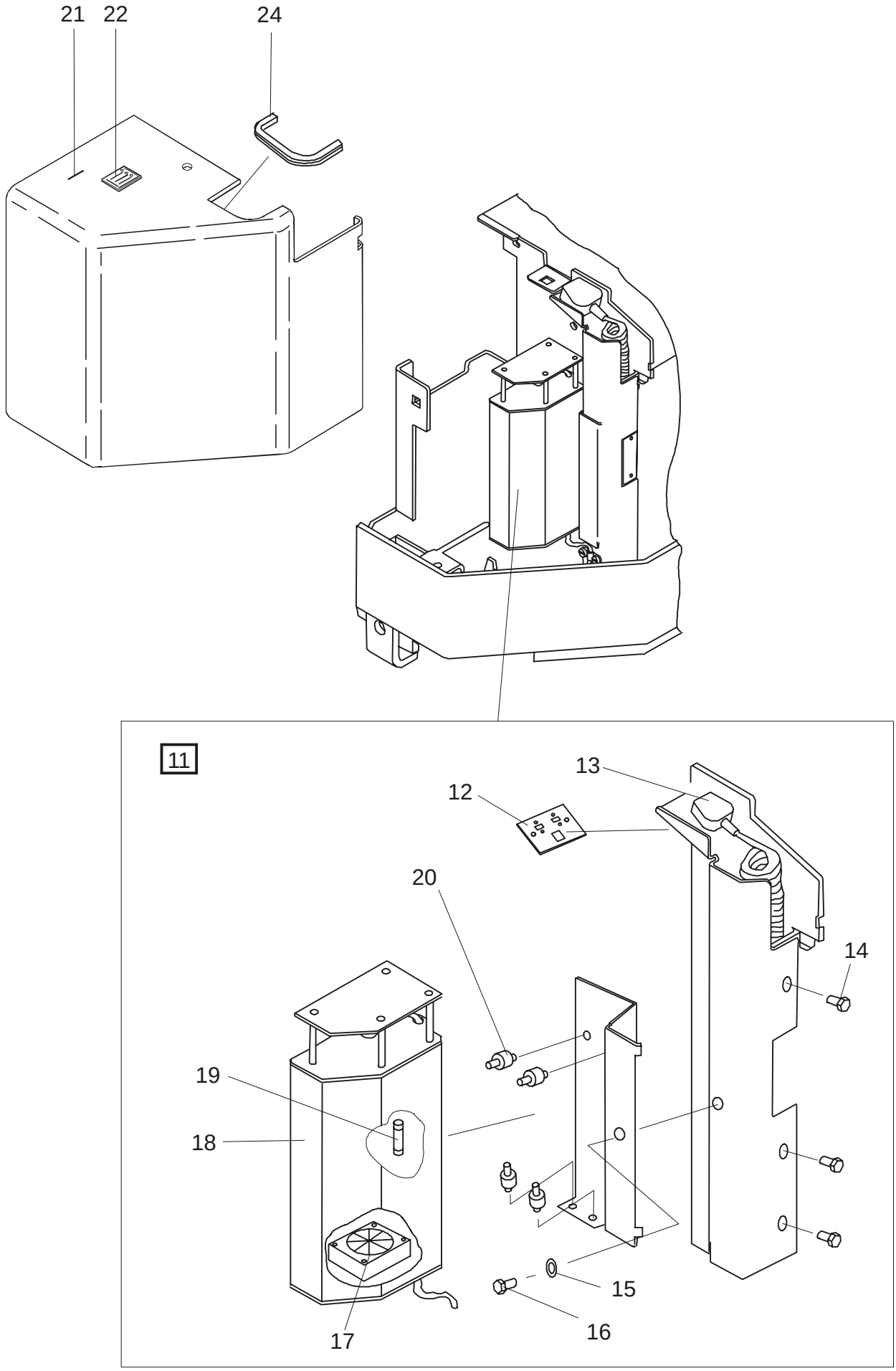

© TOYOTA Industrial Equipment Europe SARL Ancenis, France

9400-055 Extra electrical equipment

[2001-03-01]

Extra elektrisk utrustning; Elektrische Zusatzausrüstung ; Equipement électrique supplémentaire

Only UK; Endast UK; Nur UK; Seulement UK			677 2 PM 18 678 2 PM 20 678 2 PM20N	364690 - 364690 - 364690 -
Pos	Description	Pcs	Part No	Note
11	Battery charger(Complete) Batteriladdare(Komplett); Batterieladevorrichtung(Komplett); Chargeur (batterie)(Complet)	1	175195	
12	Contact Kontakt; Kontakt; Contact	1	177321	
13	Wiring harness Kablage; Kabelsatz; Câblage	1	167208	
14	Screw Skruv; Schraube; Vis	3	28835	
15	Washer Bricka; Scheibe; Rondelle	1	20375	
16	Screw Skruv; Schraube; Vis	1	21503	
17	Fan Fläkt; Kühlgebläse; Ventilateur	1	164871	
18	Battery charger Batteriladdare; Batterieladevorrichtung; Chargeur (batterie)	1	164870-001	
19	Fuse(6,3 A) Säkring; Sicherung; Fusible	1	28302	
20	Distance piece Distans; Distanz; Distance	4	27022	
21	Cover(Orange) Huv; Haube; Capot	1	175019-031	
22	Sign Skylt; Schild; Vignette	1	164927	
24	List(Meter) List(Meter); Leiste(Meter); Bande(Metre)	1	21762	

© TOYOTA Industrial Equipment Europe SARL Ancenis, France

9420-015 P0012396

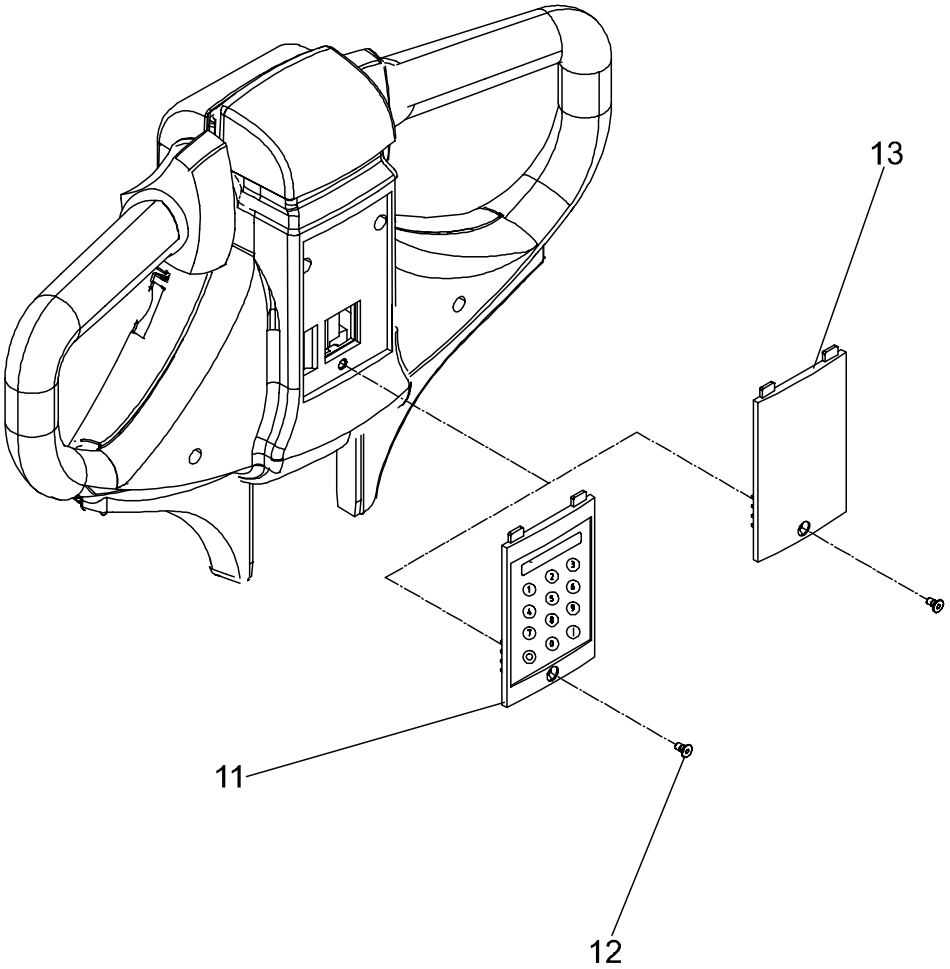

9420-015 Truck log device, code locking device [2000-07-06]

Truck logg utrustn., kodlås; Truck Log System, Codesperre; Système Optigest, verrouillage (blocage) code

			677 2 PM 18 678 2 PM 20 678 2 PM20N	364690 - 364690 - 364690 -
Pos	Description	Pcs	Part No	Note
11	Cap(Incl. keypad) Lock(Inkl. tangentbord); Deckel(Inkl. Tastatur); Couvercle(Incl. Tablette à clefs)	1	171660	
12	Screw Skruv; Schraube; Vis	1	171709	
13	Cap Lock; Deckel; Couvercle	1	171659	

© TOYOTA Industrial Equipment Europe SARL Ancenis, France

9500-206

P0012480

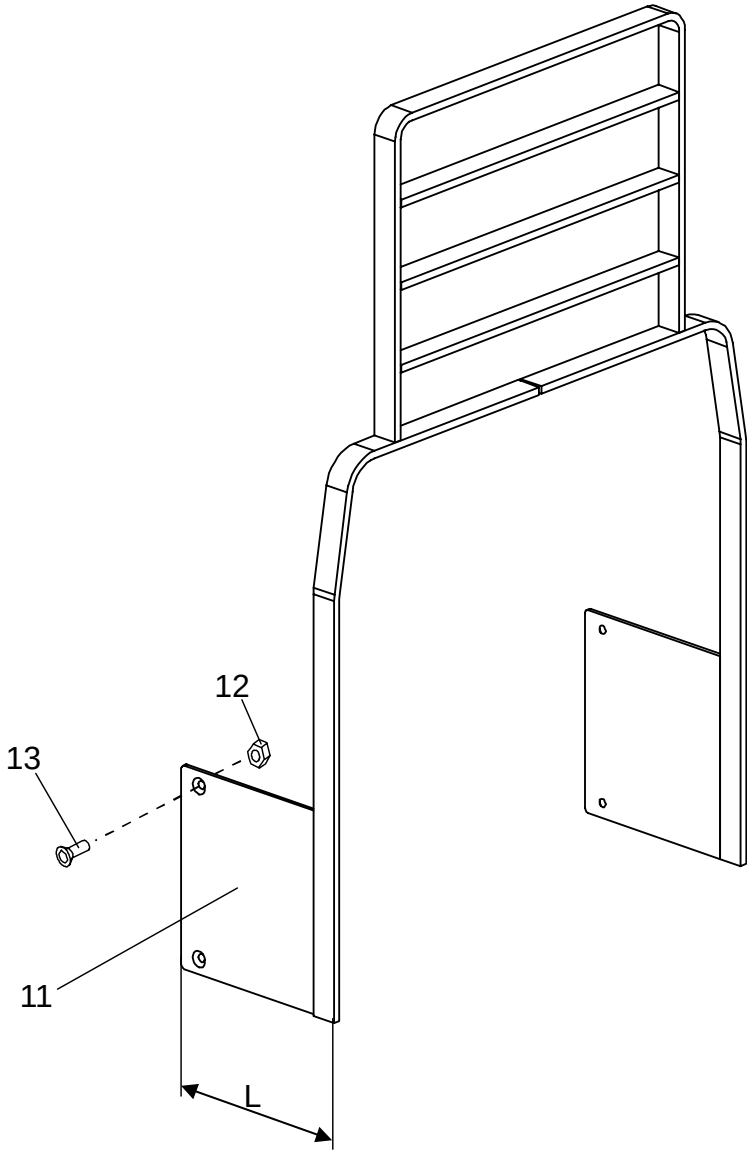

9500-206 Other extra equipment

[2000-07-14]

Extra utrustning övrigt; Zusatzausrüstung Sonstiges; Autre équipement supplémentaire

Load support; Laststöd; Lastschutzgitter; Garde de charge			677 2 PM 18 678 2 PM 20 678 2 PM20N	364690 - 364690 - 364690 -
Pos	Description	Pcs	Part No	Note
11	Load guard(L = 265 mm) Laststöd; Lastschutzgitter; Garde de charge	1	174581	
11	Load guard(L = 217 mm) Laststöd; Lastschutzgitter; Garde de charge	1	174582	
11	Load guard(L = 171 mm) Laststöd; Lastschutzgitter; Garde de charge	1	174583	
12	Nut Mutter; Mutter; Ecrou	4	20130	
13	Screw Skruv; Schraube; Vis	4	20401	

© TOYOTA Industrial Equipment Europe SARL Ancenis, France

9500-208

P0012488

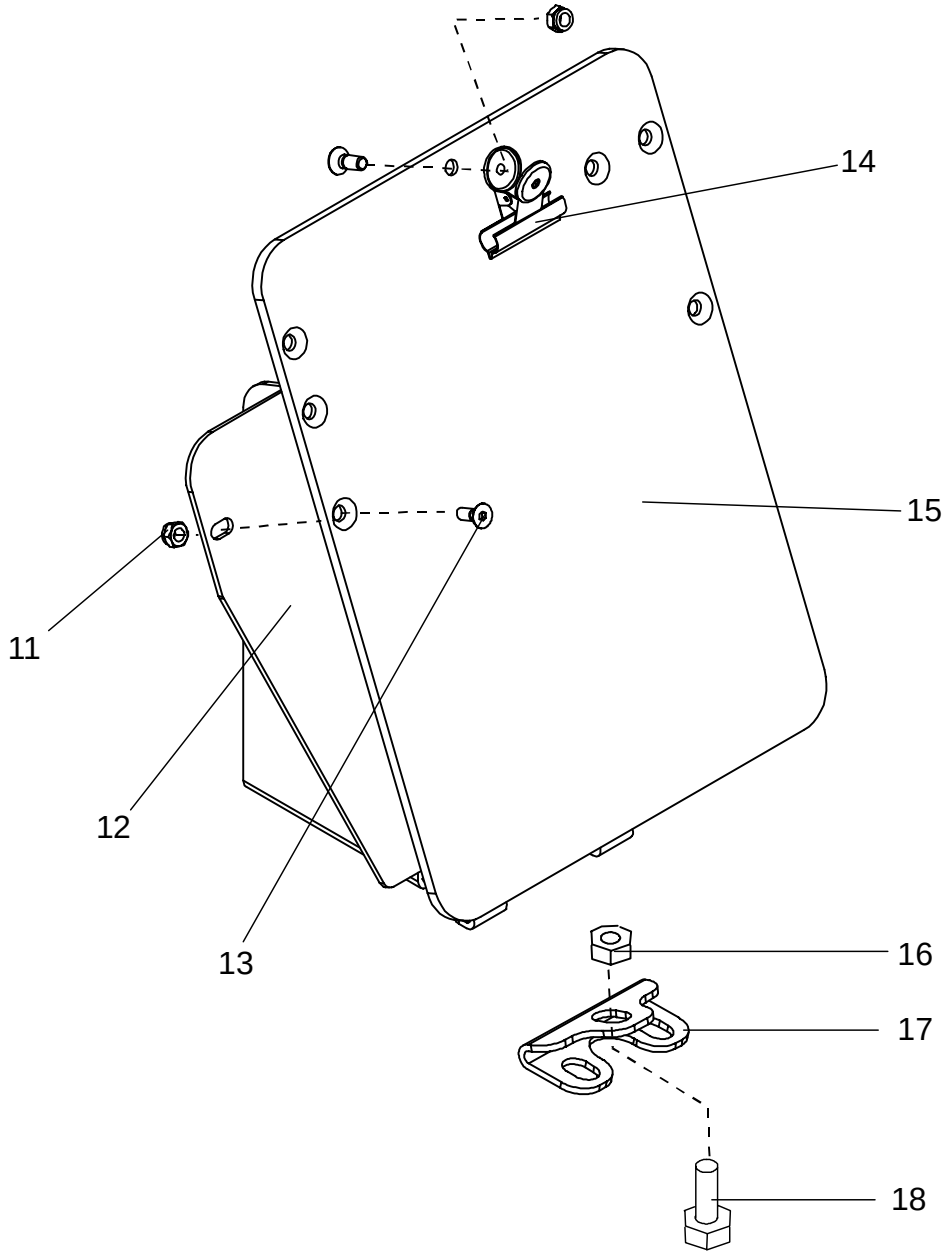

© TOYOTA Industrial Equipment Europe SARL Ancenis, France

9500-208 Other extra equipment

[2001-02-28]

Extra utrustning övrigt; Zusatzausrüstung Sonstiges; Autre équipement supplémentaire

Writing table; Skrivpulpet; Stauscheibe; Table	677 2 PM 18 364690 - 678 2 PM 20 364690 - 678 2 PM20N 364690 -

Pos	Description	Pcs	Part No	Note
11	Nut Mutter; Mutter; Ecrou	3	20433	
12	Bracket Fäste; Halterung; Support	1	175182	
13	Screw Skruv; Schraube; Vis	3	28264	
14	Clamp Klämma; Klammer; Pincer	1	175193	
15	Plate Plåt; Platte; Plaque	1	176518	
16	Nut Mutter; Mutter; Ecrou	1	20016	Option Tillval; Sonderausstattung; Option
17	Bracket Fäste; Halterung; Support	1	175183	Option Tillval; Sonderausstattung; Option
18	Screw Skruv; Schraube; Vis	1	21935	Option Tillval; Sonderausstattung; Option

© TOYOTA Industrial Equipment Europe SARL Ancenis, France

9500-219 **P0012481**

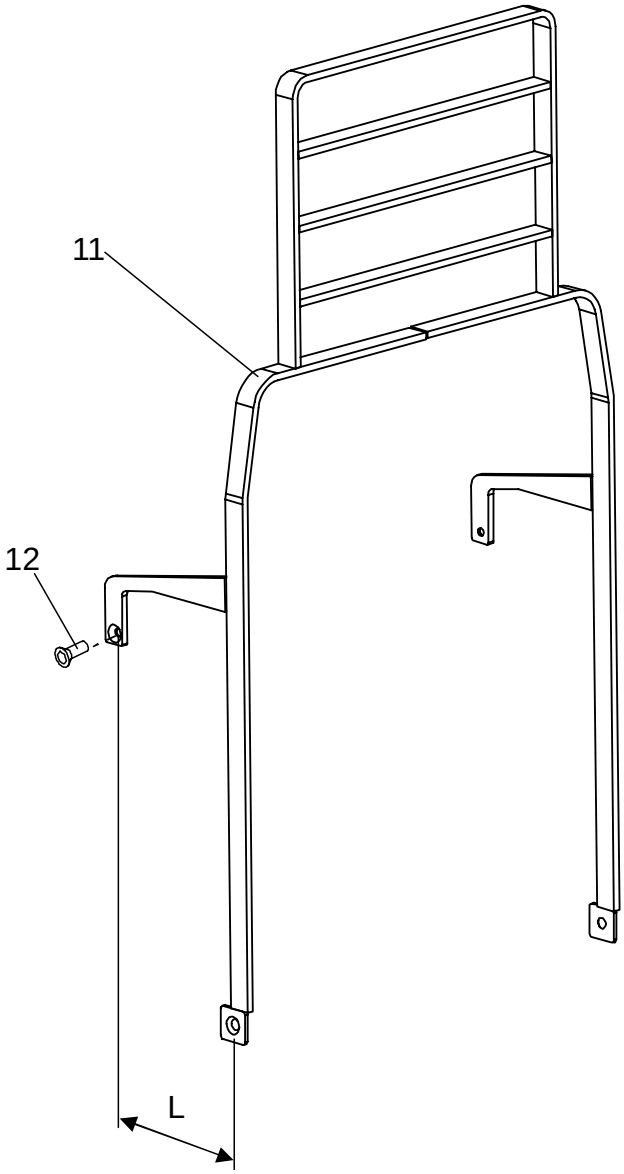

9500-219 Other extra equipment

[2000-09-08]

Extra utrustning övrigt; Zusatzausrüstung Sonstiges; Autre équipement supplémentaire

Load support; Laststöd; Lastschutzgitter; Garde de charge			678 2 PM 20	364690 -
Pos	Description	Pcs	Part No	Note
11	Load guard(L = 236 mm) Laststöd; Lastschutzgitter; Garde de charge	1	178947-001	
11	Load guard(L = 286 mm) Laststöd; Lastschutzgitter; Garde de charge	1	178947-002	
12	Screw Skruv; Schraube; Vis	12	21694	

© TOYOTA Industrial Equipment Europe SARL Ancenis, France

© TOYOTA Industrial Equipment Europe SARL Ancenis, France

9550-014

P0012487

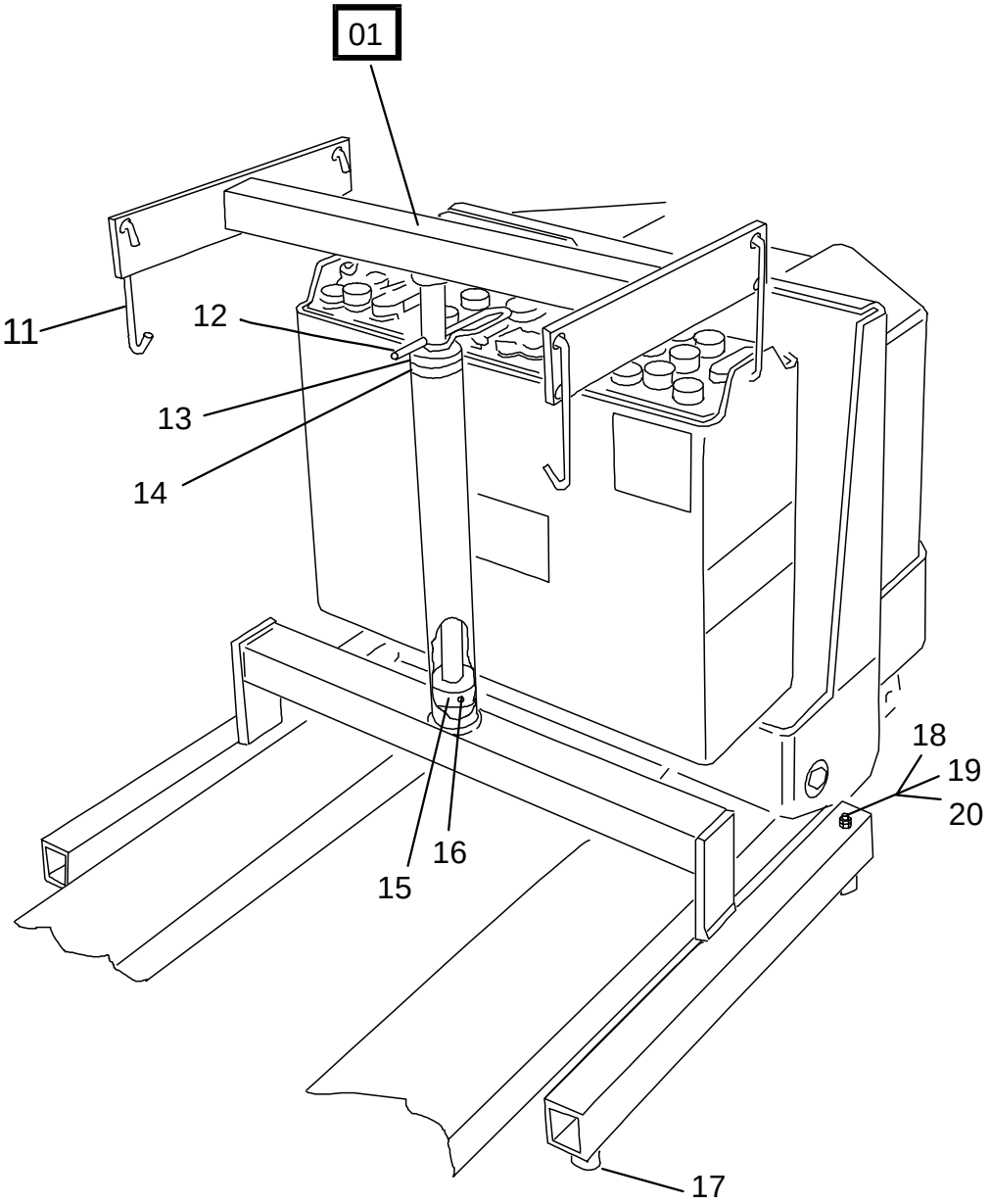

© TOYOTA Industrial Equipment Europe SARL Ancenis, France

9550-014 Battery changing equipment

[2000-07-19]

Batteribytesanordning; Batteriewechselvorrichtung; Equipement de changement batterie

			677 2 PM 18 678 2 PM 20 678 2 PM20N	364690 - 364690 - 364690 -
Pos	Description	Pcs	Part No	Note
01	Battery changing equip. compl. Batteribytesanordning kompl.; Batteriewechselvorrichtung kompl.; Changer de batterie compl.	1	135120	
11	Hook Krok; Haken; Crochet	4	135135	
12	Cotter Sprint; Federsplint; D´attelage	1	28926	
13	Washer Bricka; Scheibe; Rondelle	1	135134	
14	Guide Styrning; Steuerung; Guidage	1	135133	
15	Guide ring Styrring; Steuerring; Anneau de guidage	1	135132	
16	Locking pin Spännstift; Spannstift; Goupille	1	20868	
17	Plug Plugg; Pfropf; Bouchon	4	28075	
18	Nut Mutter; Mutter; Ecrou	2	135131	
19	Nut Mutter; Mutter; Ecrou	2	20006	
20	Screw Skruv; Schraube; Vis	2	20655	

© TOYOTA Industrial Equipment Europe SARL Ancenis, France