PARTS MANUAL

00. MAINTENANCE
FILTERS KIT

KUBOTA ENGINE
ALL COUNTRIES

FIGURE	REFERENCE	DENOMINATION	AMOUNT
001	KF.30000RE00	C 400/500 H x2/x4 FILTERS KIT	1
001.1	MN000032	OIL FILTER, CARTRIDGE	1
001.2	MN000024	FUEL FILTER, CARTRIDGE	1
001.3	MN000017	PRE-FILTER, FUEL (200h+50h)	1
001.4	46.02311.00	MAIN FILTER ELEMENT	1
001.5	46.02312.00	SECURITY FILTER ELEMENT	1
001.6	46.10047.00	OIL FILTER 180 L	1
001.7	60.20100.00	FILTER ELEMENT	1

02. ENGINE

ENGINE (I)

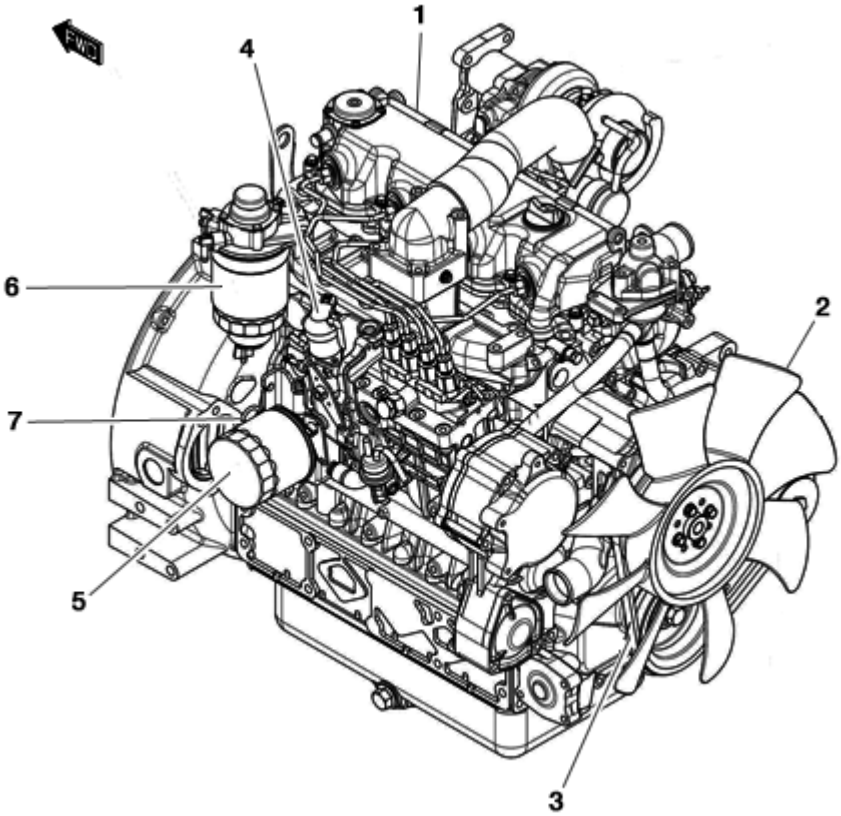

FIGURE	REFERENCE	DENOMINATION	AMOUNT
001	64.02110.01	KUBOTA DIESEL ENGINE 65KW V3300-T	1
002	30.02120.00	FAN	1
003	KU1K01197010	BELT, V	1
004	KU1C01060014	SOLENOID, STOP	1
005	MN000032	OIL FILTER, CARTRIDGE	1
006	MN000024	FUEL FILTER, CARTRIDGE	1
007	KU1C01036412	GAUGE, OIL	1

02. ENGINE

ENGINE (I)

CHASSIS: 60884

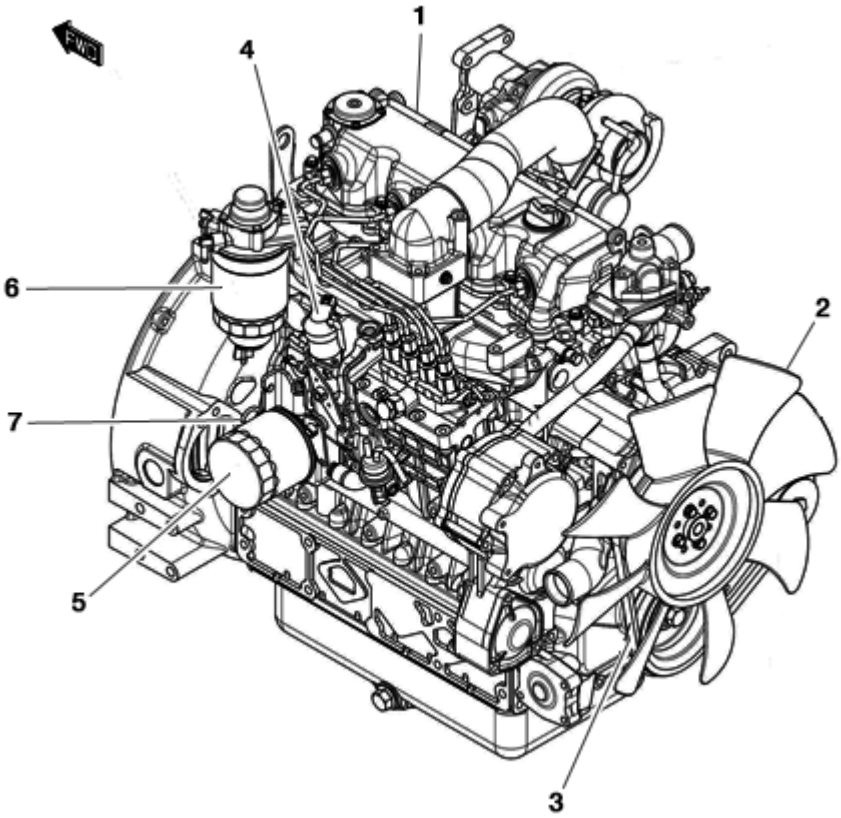

FIGURE	REFERENCE	DENOMINATION	AMOUNT
001	30.02100.02	DIESEL ENGINE 63KW KUBOTA V3600-T-E3B FLEX	1
002	30.02120.00	FAN	1
003	KU1K01197010	BELT, V	1
004	KU1C01060014	SOLENOID, STOP	1
005	MN000032	OIL FILTER, CARTRIDGE	1
006	MN000024	FUEL FILTER, CARTRIDGE	1
007	KU1C01036412	GAUGE, OIL	1

02. ENGINE

ENGINE (I)

CHASSIS: 66379

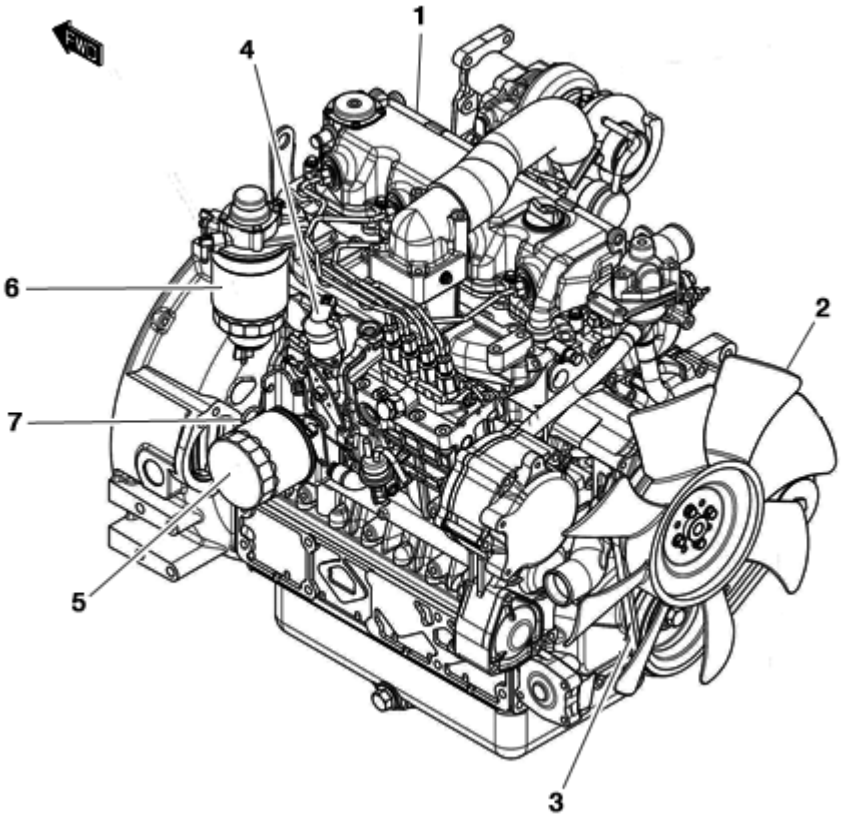

FIGURE	REFERENCE	DENOMINATION	AMOUNT
001	30.02100.02	DIESEL ENGINE 63KW KUBOTA V3600-T-E3B FLEX	1
002	30.02120.01	D430X8 BLOWER FAN	1
003	KU1K01197010	BELT, V	1
004	KU1C01060014	SOLENOID, STOP	1
005	MN000032	OIL FILTER, CARTRIDGE	1
006	MN000024	FUEL FILTER, CARTRIDGE	1
007	KU1C01036412	GAUGE, OIL	1

02. ENGINE
ENGINE (II)

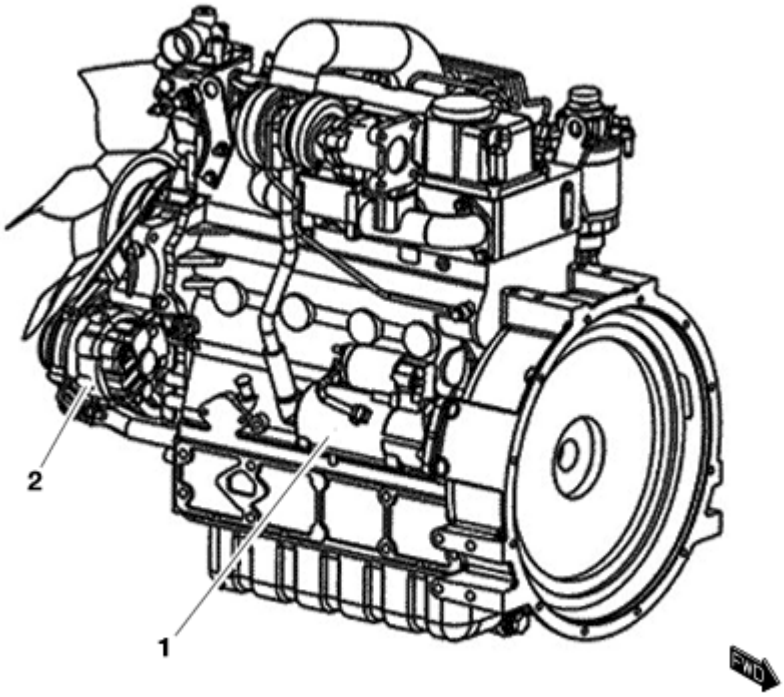

FIGURE	REFERENCE	DENOMINATION	AMOUNT
001	KU1C01063010	STARTER ASSY	1
002	KU1C01164010	ASSY DYNAMO 12V 60A	1

02. ENGINE

ENGINE (II)

CHASSIS: 60884

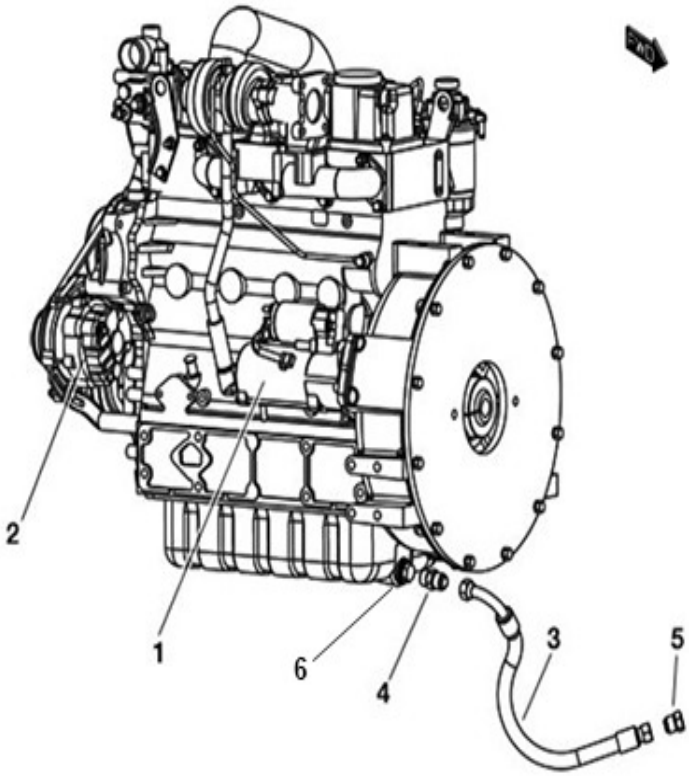

FIGURE	REFERENCE	DENOMINATION	AMOUNT
001	KU1C01063010	STARTER ASSY	1
002	KU1C01164010	ASSY DYNAMO 12V 60A	1
003	30.10380.00	TUBE R1T1/2 550 TL-C90TL7/8J	1
004	64.10328.00	RACORD M/M 7/8SAE-M22X1.5	1
005	64.10329.00	CAP 7/8SAE	1
006	106.22000.20	WASHER CU	1

02. ENGINE
PUMP COUPLING

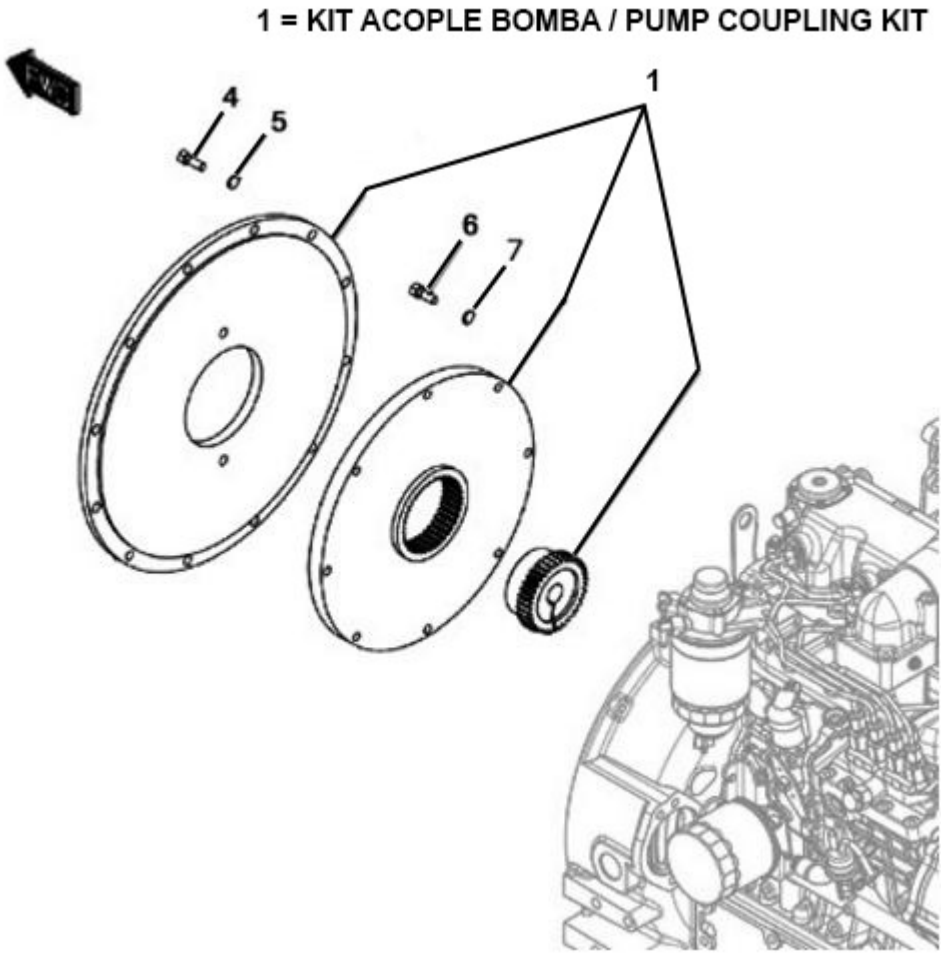

FIGURE	REFERENCE	DENOMINATION	AMOUNT
001	57.20900RE00	PUMP COUPLING KIT	1
004	607.10025.90	BOLT DIN933 3/8 25	12
005	104.14000.00	CIR-CLIP EXT. DIN7980	20
006	627.10035.86	BOLT DIN931 WHITWORTH 3/8	8

02. ENGINE

PUMP COUPLING

CHASSIS: 72869

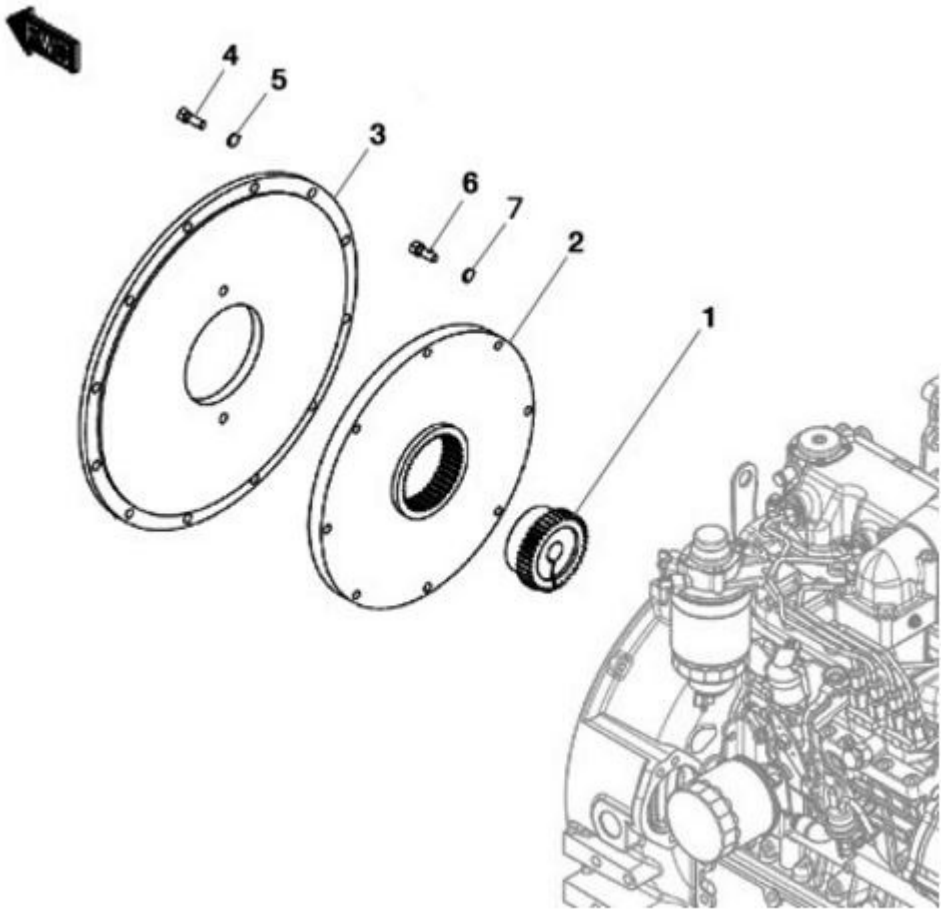

FIGURE	REFERENCE	DENOMINATION	AMOUNT
001	57.02092.01	COUPLING	1
002	57.02091.01	COUPLING Z47	1
003	57.02090.01	COUPLING D127XD451X14	1
004	607.10025.90	BOLT DIN933 3/8 25	12
005	104.14000.00	CIR-CLIP EXT. DIN7980	20
006	627.10035.86	BOLT DIN931 WHITWORTH 3/8	8

COMMENTS

MOD.5052

02. ENGINE
POMPE

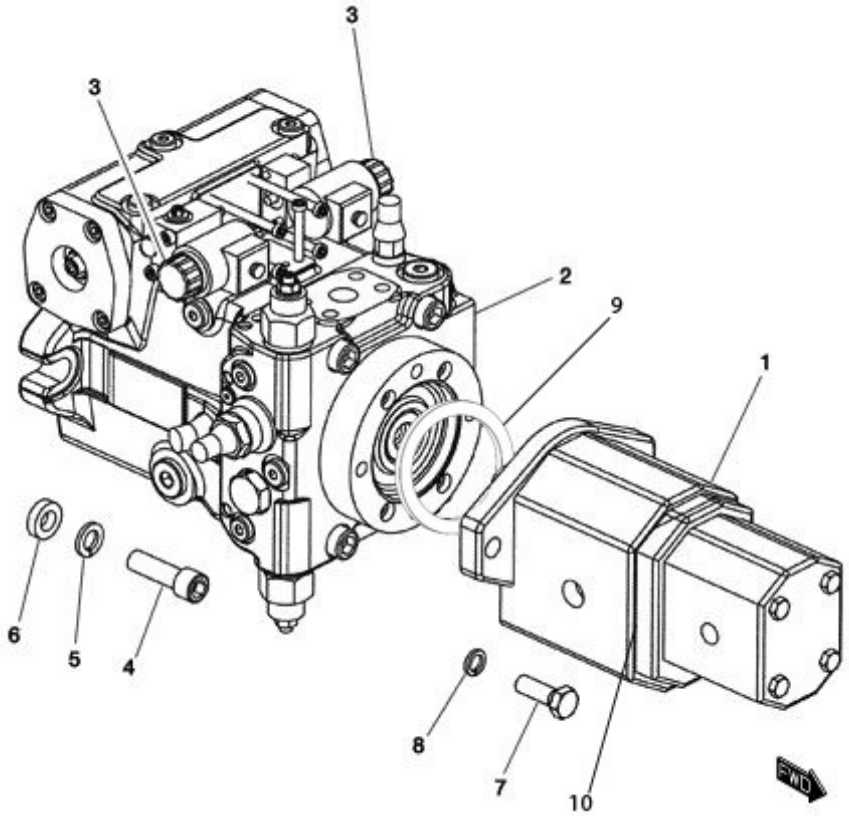

FIGURE	REFERENCE	DENOMINATION	AMOUNT
001	30.10001.00	OIL PUMP DOUBLE 30/10.6CC	1
002	57.03250.01	HYDR. PUMP 56CC HYDROMATIC	1
003	RX.30005.00	SPOOL	2
004	601.14045.86	SCREW DIN912 M14x45	2
005	104.14000.00	CIR-CLIP EXT. DIN7980	2
006	15.30110.00	WASHER 14X7X26	2
007	604.12035.86	SCREW DIN931 M12x35	2
008	104.12000.00	WASHER DIN7980 D12	2
009	08.00316.00	METALLIC GASKET BUNA D1/2 G	1
010	RQ6630.49A	GASKET MET. BUNA	1

02. ENGINE
EXHAUST PIPE

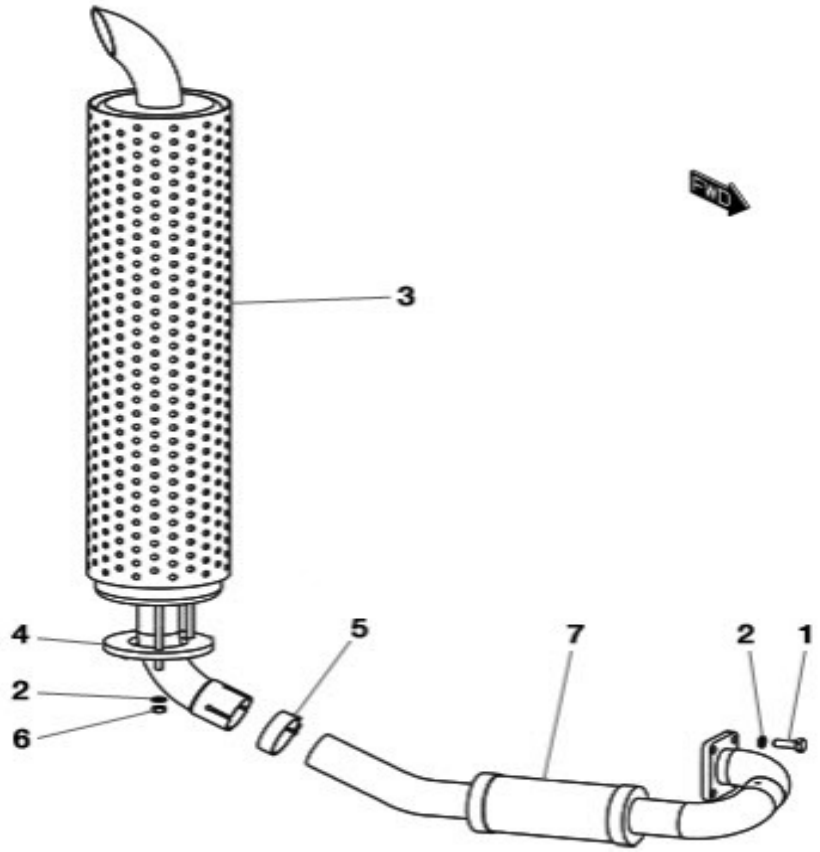

FIGURE	REFERENCE	DENOMINATION	AMOUNT
001	603.10030.86	SCREW DIN933	4
002	104.10000.00	WASHER DIN7980 D10	7
003	57.02023.00	SPARKS EXTINGUISHER MUFFLER (OPTIONAL)	1
003	57.02024.00	MUFFLER WITH PURIFIER (OPTIONAL)	1
003	57.02020.00	EXHAUST	1
004	20.02020.00	FLANGE	1
005	935.47051.66	CLAMP	1
006	701.08000.66	NUT DIN934 M8X1,25	3
007	30.02020.00	EXHAUST MANIFOLD	1

02. ENGINE
AIR FILTER COMP.

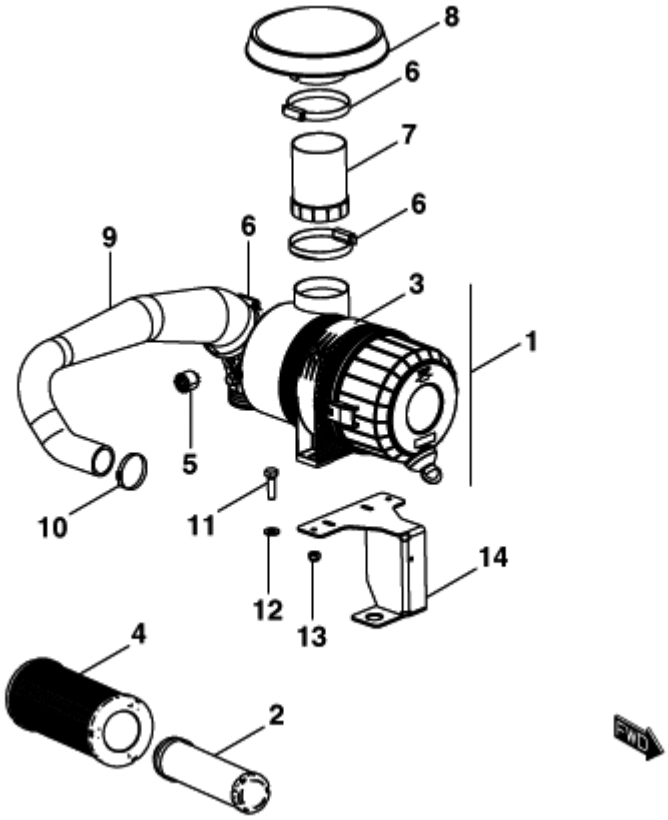

FIGURE	REFERENCE	DENOMINATION	AMOUNT
001	46.02038.00	ENGINE AIR FILTER	1
002	46.02312.00	SECURITY FILTER ELEMENT	1
003	46.02310.00	HOSE CLAMP FILTER	1
004	46.02311.00	MAIN FILTER ELEMENT	1
005	43.50119.00	AIR FILTER INDICATOR	1
006	912.90110.66	HOSE CLAMP Ø90-110	3
007	30.02302.00	TUBE, METALLIC Ø96xØ95x130	1
008	30.02301.00	PROTECTOR	1
009	30.02304.00	ADMISSION TUBE Ø45xØ55x626	1
010	912.40060.66	CLAMP D40-60	1
011	603.08030.86	SCREW DIN933 M8X30	2
012	101.08000.66	WASHER DIN125 D8	2
013	711.08000.66	NUT DIN982 M8	2
014	30.02303.00	AIR FILTER SUPPORT	1

02. ENGINE
FUEL TANK

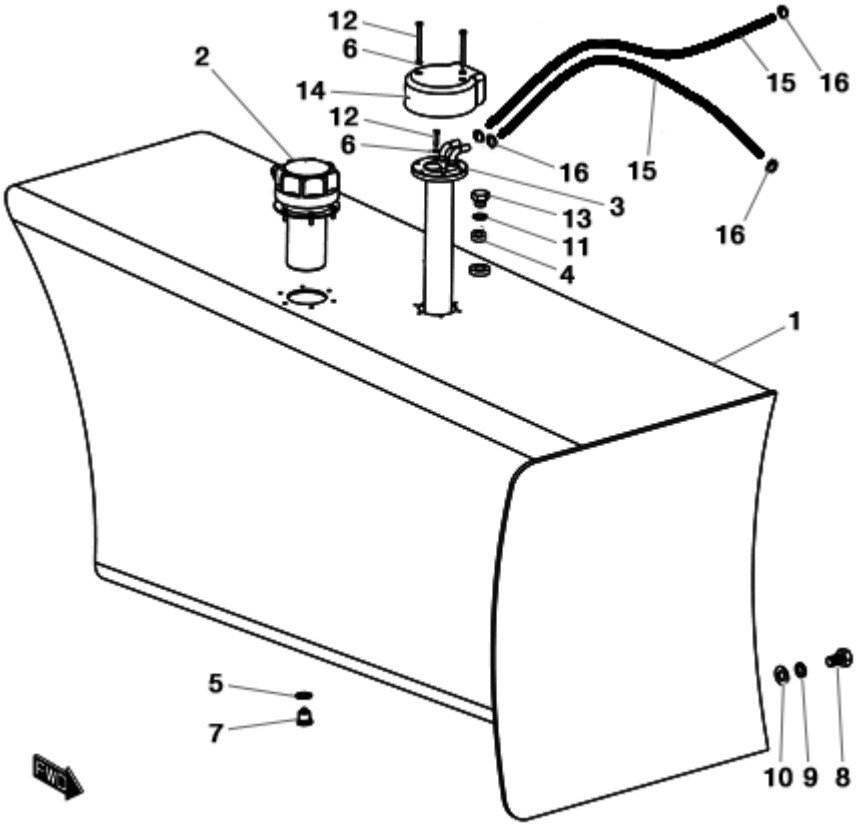

FIGURE	REFERENCE	DENOMINATION	AMOUNT
001	30.02040.00	FUEL TANK 120 L	1
002	30.02042.00	CAP. THEFT PROOF TANK	1
003	30.02041.00	LEVEL	1
004	70.02047.00	FITTING H/H	1
005	107.14000.10	WASHER AL 14x20x1.5	1
006	104.04000.00	WASHER DIN7980 D4	6
007	10.00921.00	CAP M14X150 DIN908	1
008	603.12020.86	SCREW DIN933	2
009	104.12000.00	WASHER DIN7980 D12	2
010	101.12000.66	WASHER DIN125 D12	2
011	28.00341.00	METALLIC GASKET BUNA D1/4	1
012	615.04050.66	BOLT DIN84 M4x50	2
013	46.09014.00	CAP	1
014	46.10059.00	FUEL LEVEL PROTECTOR	1
015	469.03014.00	HOSE L/P MAT. 8x14	2
016	912.08016.66	CLAMP DIN3017	4
017	615.04020.66	SCREW DIN84	4

02. ENGINE
DELIVERY

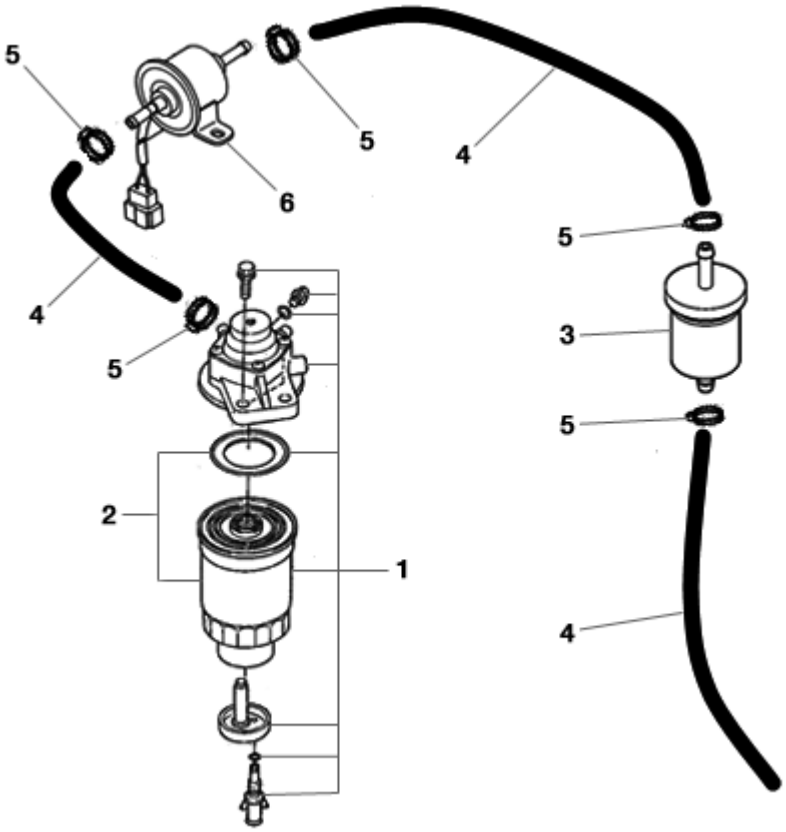

FIGURE	REFERENCE	DENOMINATION	AMOUNT
001	KU1K01143010	ASSY FILTER, FUEL	1
002	MN000024	FUEL FILTER, CARTRIDGE	1
003	MN000017	PRE-FILTER, FUEL (200h+50h)	1
004	469.03014.00	HOSE L/P MAT. 8x14	3
005	912.08016.66	CLAMP DIN3017	5
006	KU1G63952031	ELECTRIC PUMP	1

02. ENGINE

ACCELERATOR PEDAL

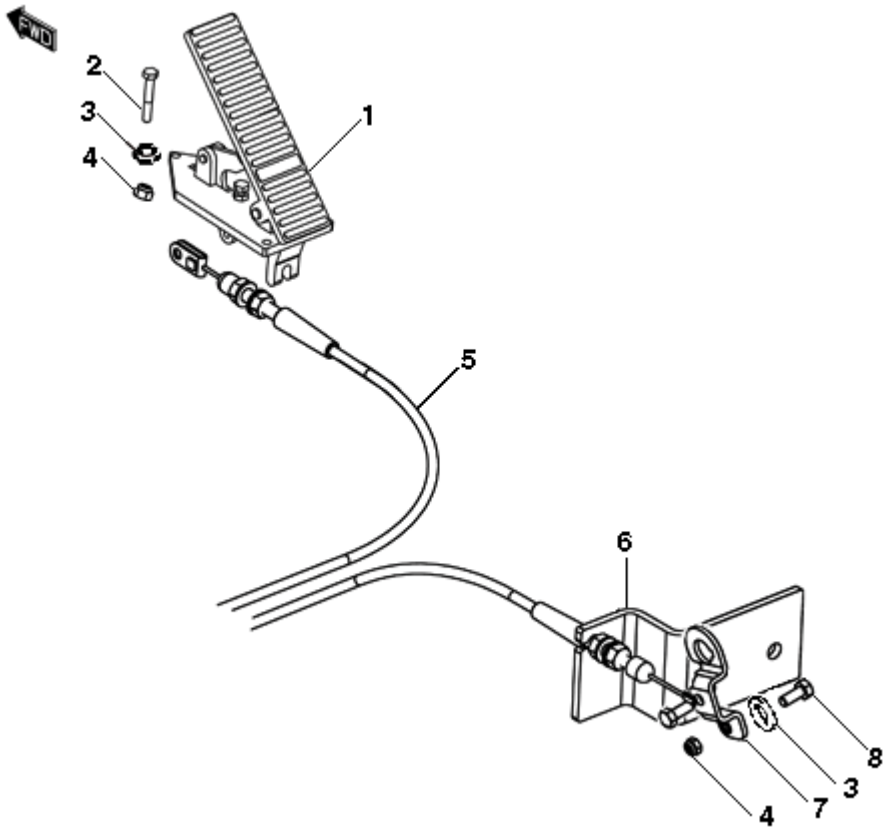

FIGURE	REFERENCE	DENOMINATION	AMOUNT
001	12.02020.00	THROTTLE PEDAL VIMOTER	1
002	604.06040.86	SCREW DIN931 M6x40	3
003	101.06000.66	WASHER DIN125 D6	5
004	711.06000.66	NUT DIN982 M6	5
005	57.02041.00	CABLE 1925	1
006	30.02065.00	FIXING SUPPORT	1
007	30.02066.00	ACC.LEVER	1
008	603.06015.86	SCREW DIN933 M6x15	2

02. ENGINE
RADIATOR

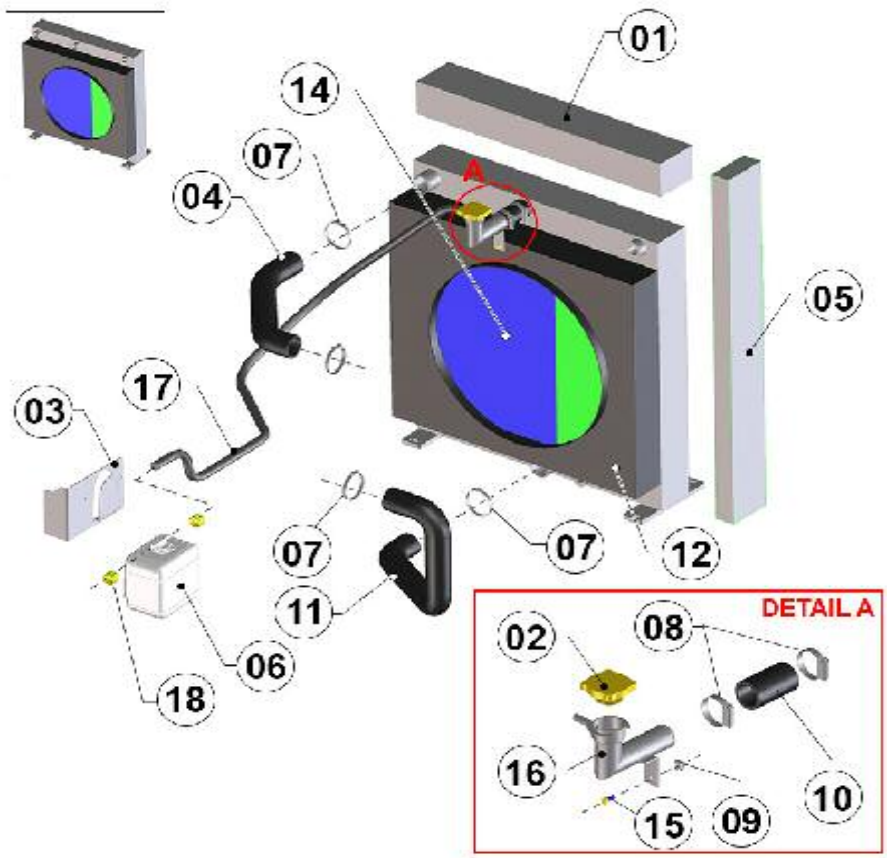

FIGURE	REFERENCE	DENOMINATION	AMOUNT
001	20.02072.01	RADIATOR PROTECTION	1
002	32.02151.00	REFRIGERANT CAP 1BAR	1
003	30.02080.00	STRIGHT SUPPORT	1
004	30.02053.00	RUBBER HOSE B/P Ø45xØ55	1
005	20.02071.01	GUARD RADIATOR	2
006	32.02155.00	EXPANSION TANK	1
007	912.40060.66	CLAMP D40-60	4
008	912.30045.00	CLAMP	2
009	726.06003.66	CAGED NUT M6x3	1
010	30.02058.00	RUBBER HOSE B/P Ø35xØ45	1
011	30.02054.00	RUBBER HOSE B/P Ø45xØ55	1
012	30.02052.00	RADIATOR PROTECTOR	1
013	30.02051.00	WATER-OIL RADIATOR	1
014	30.02050.00	RADIATOR	1
015	603.06015.86	SCREW DIN933 M6x15	1
016	30.02057.00	TUBE, METALLIC Ø35 ELBOW 110x67	1
017	469.03014.00	HOSE L/P MAT. 8x14	1
018	948.01308.00	SPRING CLAMP Ø13	3

02. ENGINE

RADIATOR

CHASSIS: 76536

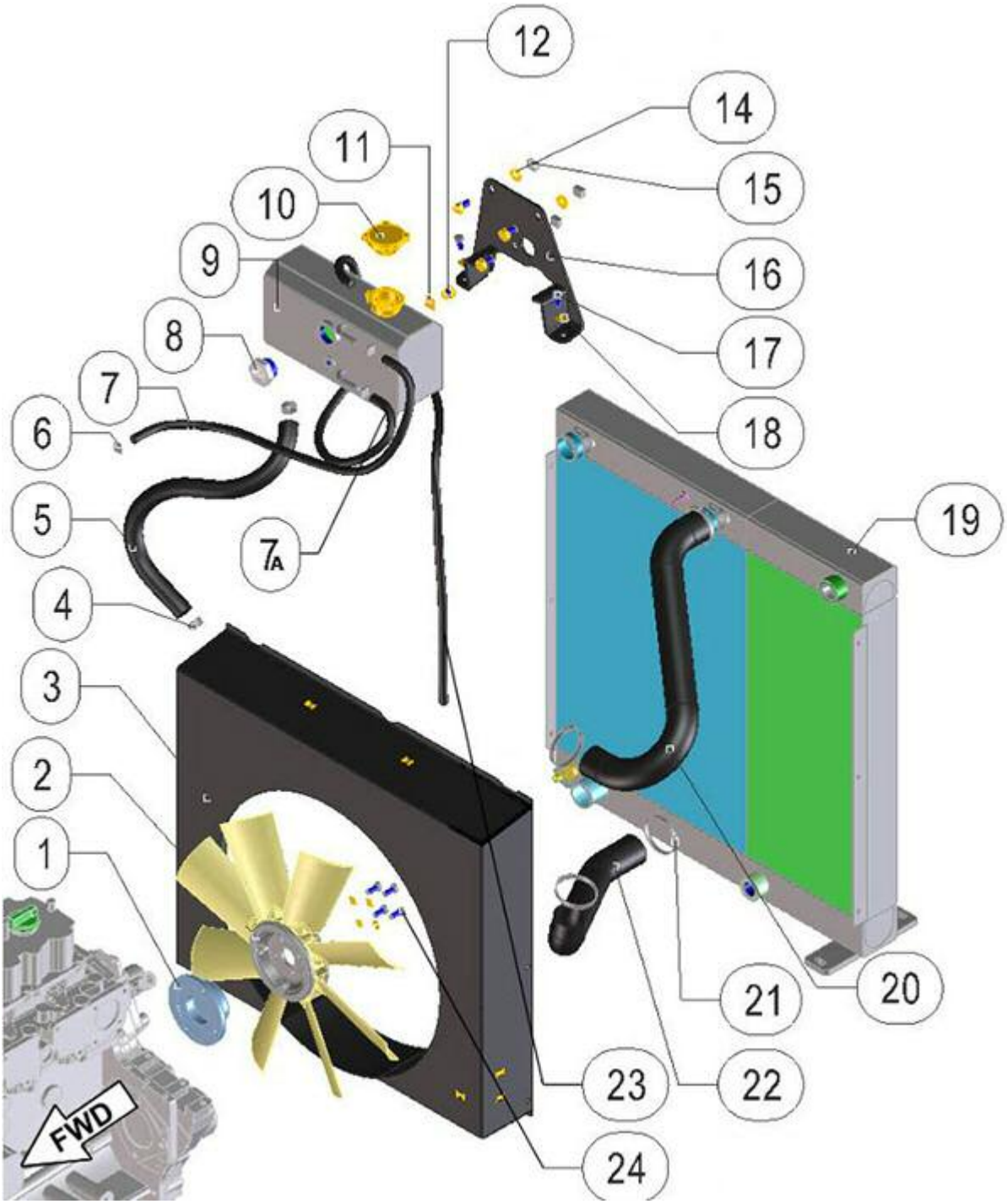

FIGURE	REFERENCE	DENOMINATION	AMOUNT
001	64.02020.00	FAN SUPPORT	1
002	64.02021.01	FAN 8P 35° D460	1
003	30.02151.00	RADIATOR PROTECTOR KUBOTA	1
004	912.20032.00	CLAMP	2
005	469.45031.00	TUBE B/P 22x31	1
006	912.08016.66	CLAMP DIN3017	4
007	469.03014.00	HOSE L/P MAT. 8x14	1

007A	469.03014.00	HOSE L/P MAT. 8x14	1
008	30.10041.00	LEVEL VISUAL INDICATOR 1	1
009	64.02543.00	EXPANSION TANK 3.5L	1
010	32.02151.00	REFRIGERANT CAP 1BAR	1
011	107.14000.10	WASHER AL 14x20x1.5	1
012	80.01035.01	CAP	1
014	101.10000.66	WASHER DIN125 D10	3
015	711.10000.66	SHOCK ABSORBER	3
016	30.02056.00	SUPPORT FIXING GLASS EXPANSION	1
017	603.08020.86	SCREW DIN933 M8x20	6
018	104.08000.00	WASHER DIN7980 D8	6
019	30.02055.01	WATER-OIL RADIATOR	1
020	30.02094.00	TUBE RUBBER B/P 45X52X357	1
021	912.40060.66	CLAMP D40-60	4
022	30.02095.00	TUBE RUBBER B/P 42X50X278	1
023	469.03014.00	HOSE L/P MAT. 8x14	1

COMMENTS

MOD.4416A

02. ENGINE
ENGINE SUPPORTS

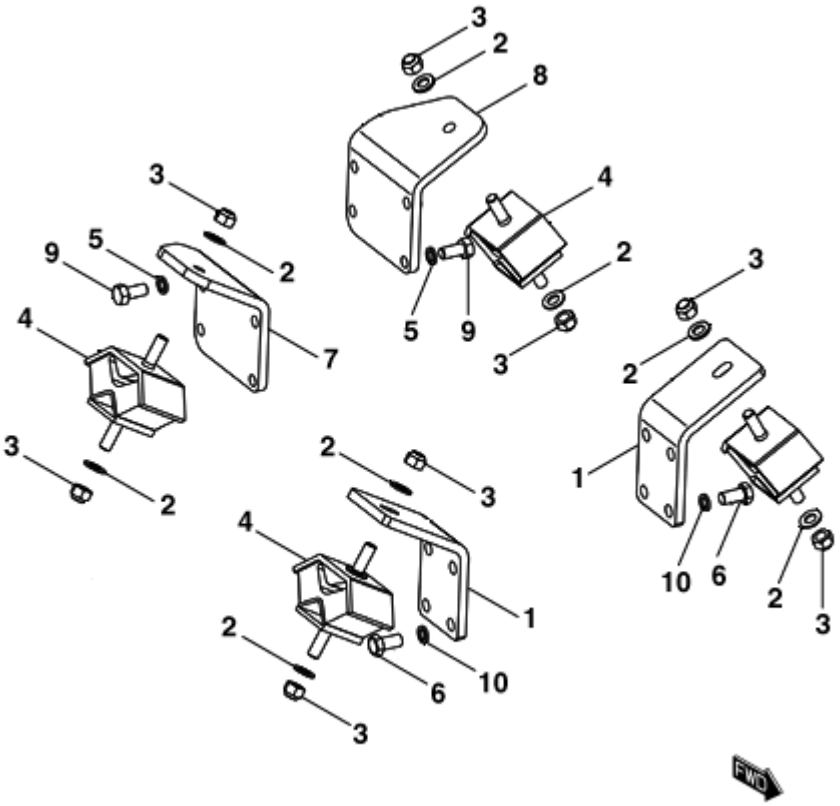

FIGURE	REFERENCE	DENOMINATION	AMOUNT
001	30.02060.00	ENGINE SUPPORT 80X106X167	2
002	101.12000.66	WASHER DIN125 D12	8
003	720.12000.66	NUT M12 DIN985 AUTOLOCKING	8
004	57.02070.00	SHOCK ABSORBER, 60x120x64 60 A	4
005	104.12000.00	WASHER DIN7980 D12	16
006	607.12025.66	BOLT DIN933 1/2 -13UNC	8
007	30.02062.00	ENGINE SUPPORT	1
008	30.02061.00	ENGINE SUPPORT	1
009	617.12025.86	SCREW DIN933	8
010	104.14000.00	CIR-CLIP EXT. DIN7980	8

02. ENGINE

ENGINE SUPPORTS

CHASSIS: 61308

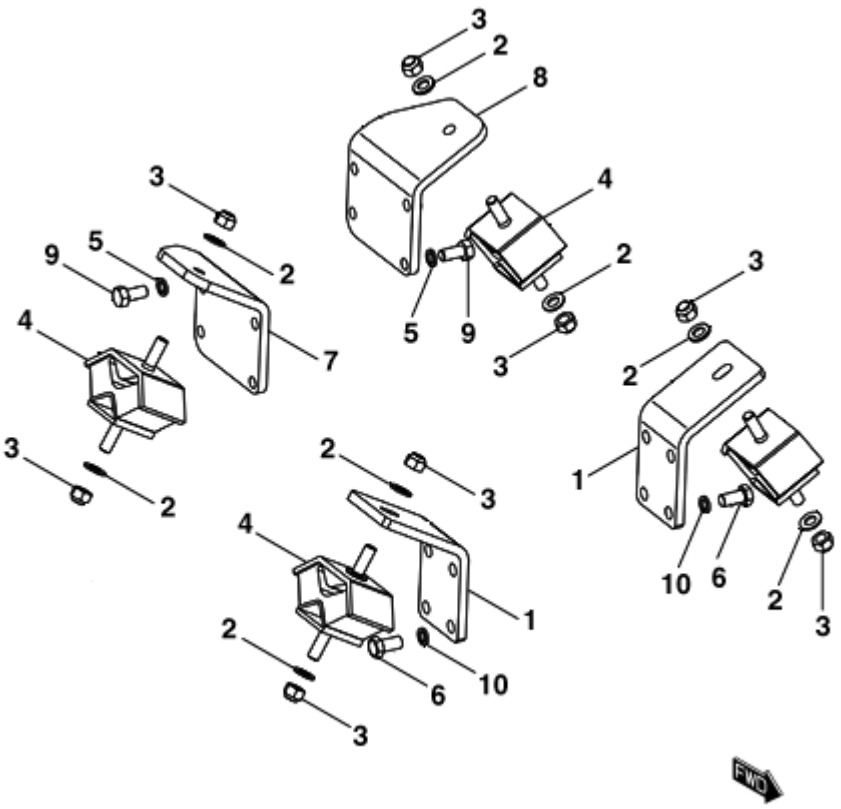

FIGURE	REFERENCE	DENOMINATION	AMOUNT
001	30.02060.00	ENGINE SUPPORT 80X106X167	2
002	101.12000.66	WASHER DIN125 D12	8
003	720.12000.66	NUT M12 DIN985 AUTOLOCKING	8
004	20.02019.00	SHOCK ABSORBER, 60x120x64 70 A	4
005	104.12000.00	WASHER DIN7980 D12	16
006	607.12025.66	BOLT DIN933 1/2 -13UNC	8
007	30.02062.00	ENGINE SUPPORT	1
008	30.02061.00	ENGINE SUPPORT	1
009	617.12025.86	SCREW DIN933	8
010	104.14000.00	CIR-CLIP EXT. DIN7980	8

02. ENGINE

ENGINE SUPPORTS

CHASSIS: 65357

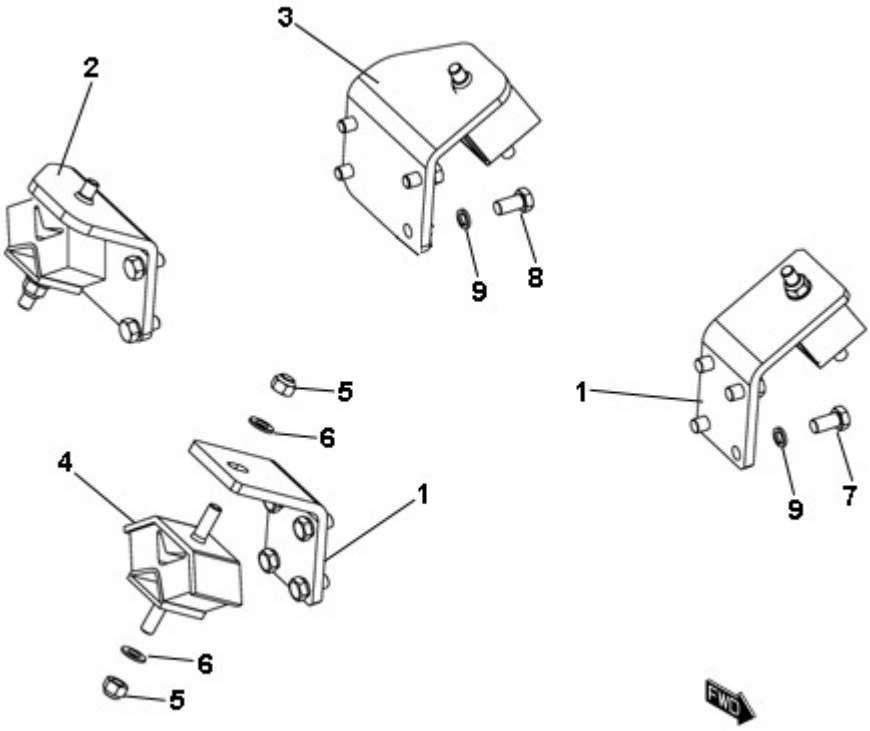

FIGURE	REFERENCE	DENOMINATION	AMOUNT
001	30.02060.01	MOTOR SUPPORT 80X106X167	2
002	30.02062.01	MOTOR MOUNT RIGHT 96X132X163	1
003	30.02061.01	MOTOR MOUNT LEFT 96X132X163	1
004	20.02019.00	SHOCK ABSORBER, 60x120x64 70 A	4
005	711.12000.66	NUT DIN982 M12	8
006	101.12000.66	WASHER DIN125 D12	8
007	607.12025.66	BOLT DIN933 1/2 -13UNC	8
008	617.12025.86	SCREW DIN933	8
009	104.12000.00	WASHER DIN7980 D12	16

03. TRANSMISSION
GEARBOX

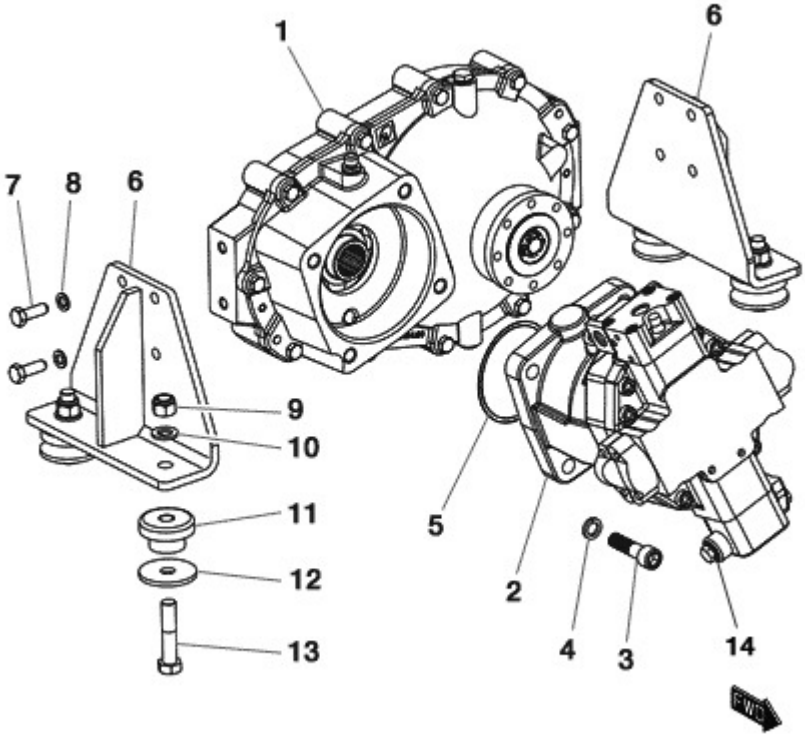

FIGURE	REFERENCE	DENOMINATION	AMOUNT
001	30.03150.00	COMPLETE REDUCTOR BOX	1
002	30.03020.00	HYDR. ENGINE 107CC. PISTONS DA	1
003	601.16060.86	HEXAGON SOCKET HEAD SCREW DIN912 M16x60	4
004	104.16000.00	CIR-CLIP EXT. DIN7980	4
005	201.16003.50	GASKET DIN3770 160X3	1
006	30.03170.00	FIXING SUPPORT 80X203X260	2
007	603.12035.86	SCREW DIN933	8
008	104.12000.00	WASHER DIN7980 D12	8
009	711.16000.66	NUT DIN982 M16 8.8 K	4
010	101.16000.66	WASHER DIN125 D16	4
011	43.70381.00	PANEL	4
012	43.70833.00	WASHER 65X16X5	4
013	604.16075.86	SCREW DIN931 M16x75	4
014	RXR909603762	VALVE	1

03. TRANSMISSION

TRANSMISSION SUPPORT

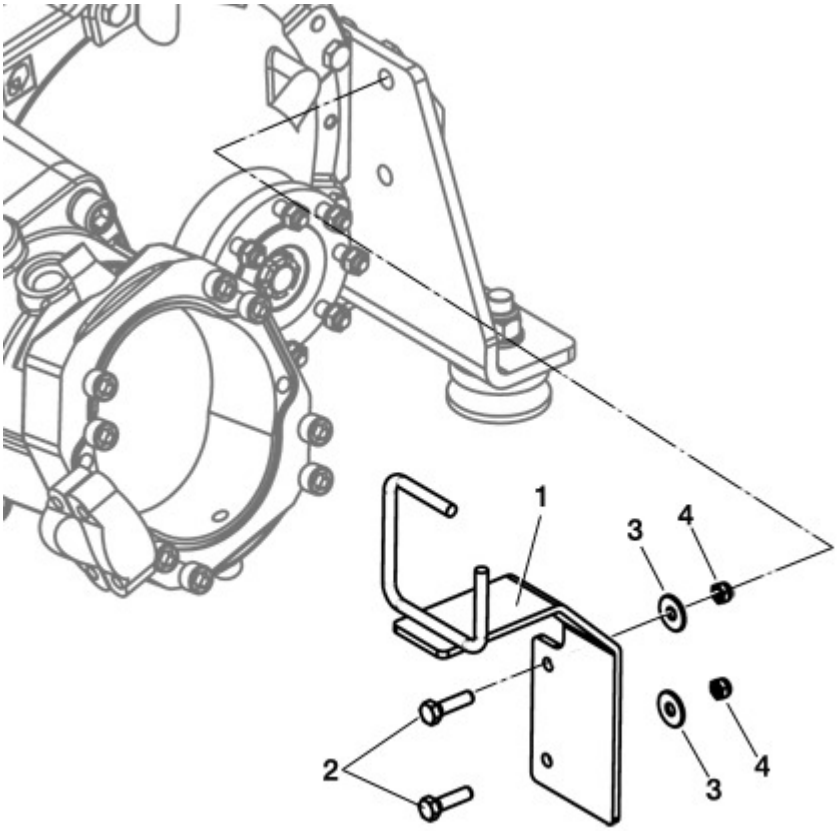

FIGURE	REFERENCE	DENOMINATION	AMOUNT
001	30.10080.00	SUPPORT 80X165X270	1
002	603.08030.86	SCREW DIN933 M8X30	2
003	112.08000.66	WASHER DIN9021 D8	2
004	711.08000.66	NUT DIN982 M8	2

03. TRANSMISSION

REDUCTION BOX INNER (PART 1)

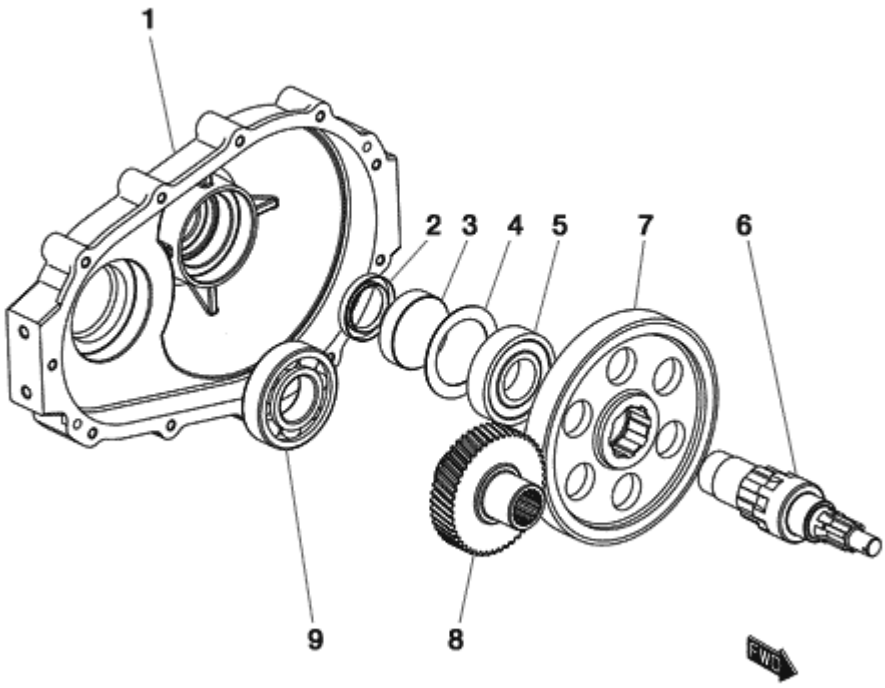

FIGURE	REFERENCE	DENOMINATION	AMOUNT
001	30.03150.00	COMPLETE REDUCTOR BOX	1
002	205.45010.50	SEAL DIN3760	1
003	57.03104.00	REDUCTION GEAR CAP	1
004	43.70403.00	PANEL 1.5X72X100	1
005	301.45025.00	BEARING DIN625	1
006	30.03152.00	SHAFT CIL/ROS	1
007	20.03054.00	GEAR (CH250)	1
008	30.03101.00	GEAR Z49	1
009	301.50027.00	GEAR DIN625	1

03. TRANSMISSION

REDUCER BOX INNER (PART 2)

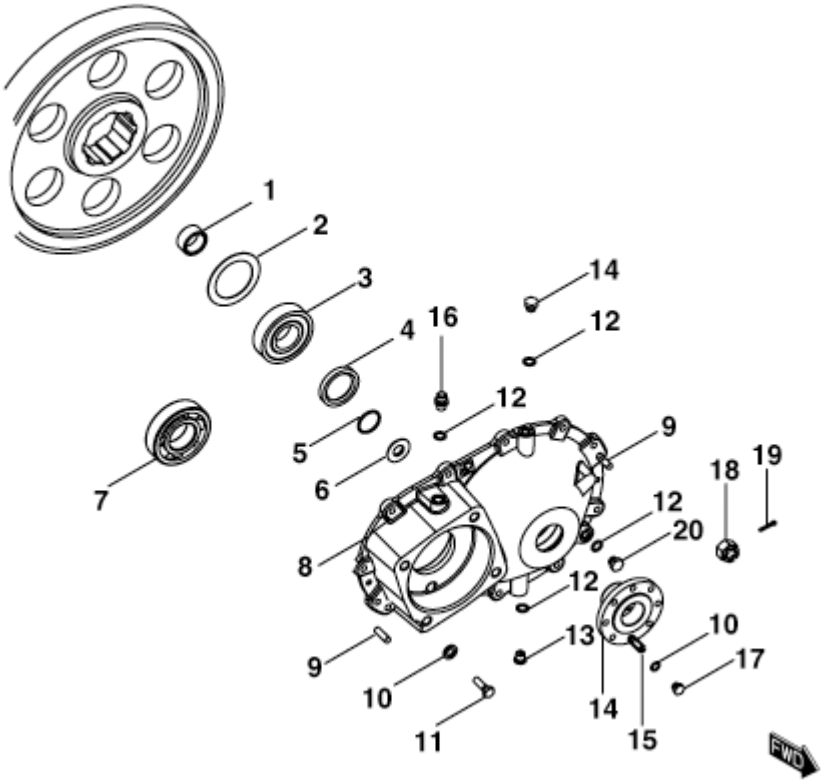

FIGURE	REFERENCE	DENOMINATION	AMOUNT
001	30.03153.00	SUPLEMENT D35X45X21	1
002	43.70403.00	PANEL 1.5X72X100	1
003	301.45025.00	BEARING DIN625	1
004	205.50010.50	SEAL DIN3760	1
005	201.37003.50	O-RING DIN3770	1
006	15.00368.02	WASHER	1
007	301.50027.00	GEAR DIN625	1
008	30.03104.00	REDUCTOR COVER	1
009	403.10035.00	PIN DIN6325 D10X35	2
010	104.10000.00	WASHER DIN7980 D10	19
011	604.10035.86	SCREW DIN931	11
012	107.14000.10	WASHER AL 14x20x1.5	4
013	10.00921.00	CAP M14X150 DIN908	1
014	80.01035.00	SCREW DIN910*	1
015	15.01034.00	STUD DIN938* 41 M10x1,5	8
016	20.03104.00	CAP	1
017	701.10000.66	NUT DIN934 M10x1.5	8
018	710.20000.66	NUT DIN935 M20x1,5	1

03. TRANSMISSION
REDUCER BOX INNER (PART 2)

FIGURE	REFERENCE	DENOMINATION	AMOUNT
019	401.35040.60	PIN	1
020	80.01035.00	SCREW DIN910*	2

03. TRANSMISSION
INCHING PEDAL

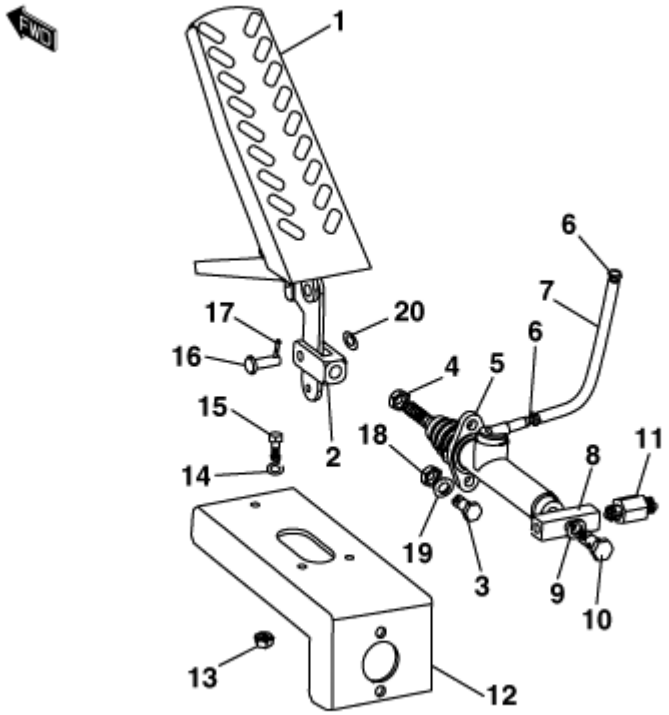

FIGURE	REFERENCE	DENOMINATION	AMOUNT
001	43.80250.01	PEDAL EMBR. 55X116X250	1
002	20.05040.00	ART. FORK	1
003	603.08025.86	SCREW DIN933 M8x25	2
004	701.10000.66	NUT DIN934 M10x1.5	1
005	20.03070.00	FOOT BRAKING PUMP D15.8X38 OIL MIN.	1
006	948.00907.00	CLAMP SPRING D9	2
007	469.15009.00	PLASTIC HOSE 6X9	1
008	20.03075.00	FITTING O/H/H 16X16X50	1
009	106.10000.20	WASHER CU 10x16x1,5 DIN7603A	2
010	20.05036.00	FITTING SCREW SIMPLE M10X1	1
011	20.03072.00	PRESSURE SWITCH 1/8` BSPT 40BAR	1
012	20.03073.00	BRAKE PUMP SUPPORT	1
013	711.06000.66	NUT DIN982 M6	3
014	104.06000.00	WASHER DIN7980 D6	3
015	604.06030.86	SCREW DIN931	3
016	01.00514.01	AXLE CIL/CPA 14x8x28	1
017	401.02025.60	PIN DIN94 2x25	1
018	711.08000.66	NUT DIN982 M8	2

03. TRANSMISSION
INCHING PEDAL

FIGURE	REFERENCE	DENOMINATION	AMOUNT
019	104.08000.00	WASHER DIN7980 D8	2
020	112.08000.66	WASHER DIN9021 D8	2

03. TRANSMISSION

CARDAN JOINT

FIGURE	REFERENCE	DENOMINATION	AMOUNT
001	30.03600.00	CARDAN 181	1
002	30.03602.00	FLANGE	2

TRANSMISSION (FRONT AXLE)
FRONT AXLE

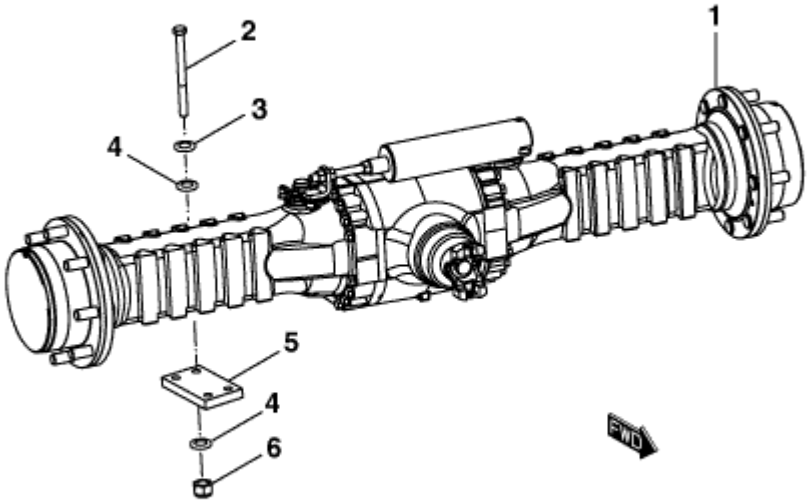

FIGURE	REFERENCE	DENOMINATION	AMOUNT
001	30.03200.00	FRONT AXLE DANA JOKE 1530	1
002	604.20240.86	BOLT DIN931 M20x240	8
003	104.20000.00	CIR-CLIP EXT. DIN7980	8
004	101.20000.66	WASHER DIN125	16
005	30.03250.00	STRIP SUPPORT 25X120X200	2
006	711.20000.66	NUT	8

TRANSMISSION (FRONT AXLE)
CARTER DIFFÉRENTIEL

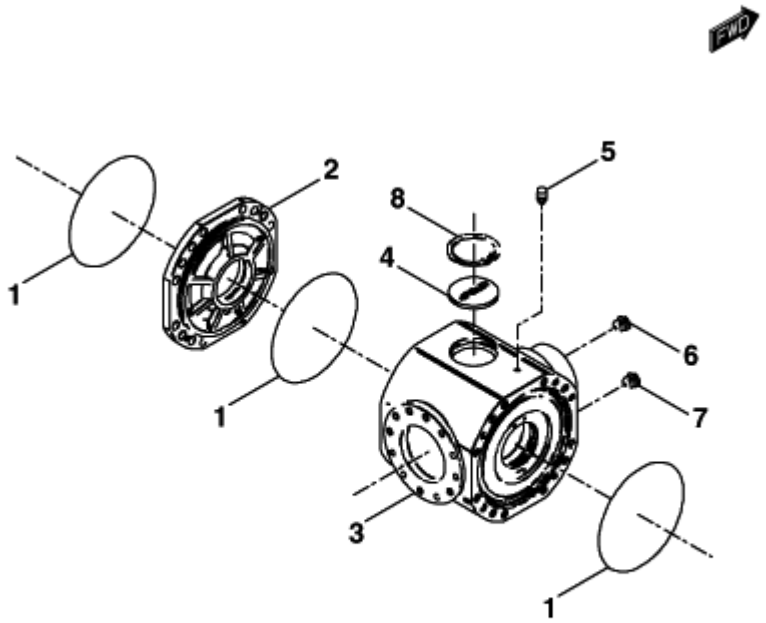

FIGURE	REFERENCE	DENOMINATION	AMOUNT
001	DA001051178	O-RING	3
002	DA1120100703	INTERMEDIATE COVER	1
003	DA1120103701	CASE	1
004	DA1710101504	CAP	1
005	DA1120101801	VENT	1
006	DA1120161001	CAP	1
007	DA1120161003	MAGNET PLUG	1
008	DA07JM00090	RING	1

TRANSMISSION (FRONT AXLE)
RING & PINION

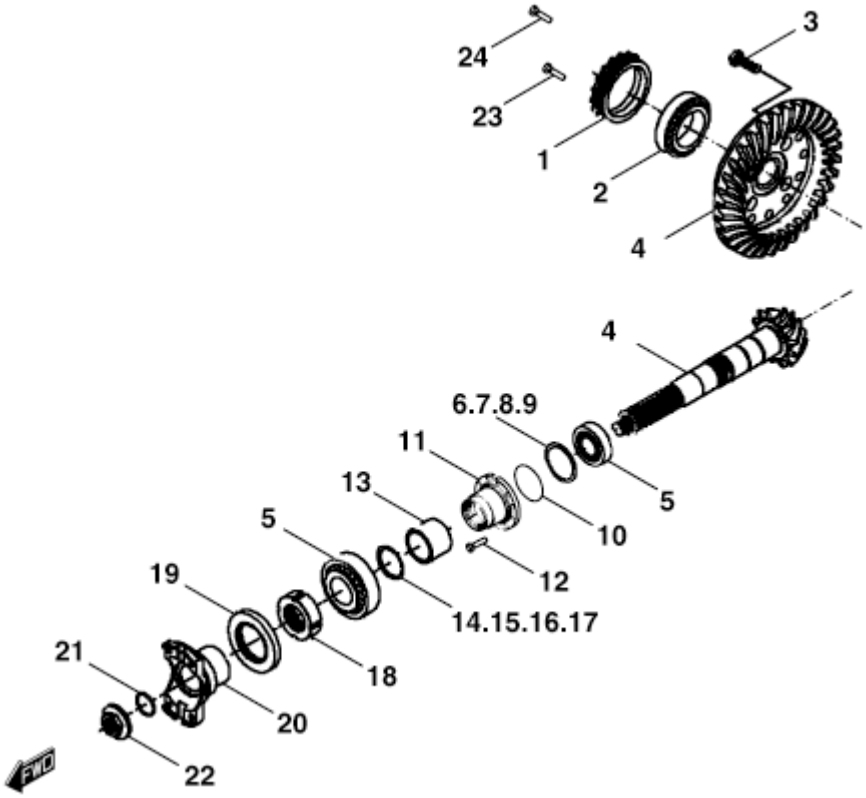

FIGURE	REFERENCE	DENOMINATION	AMOUNT
001	DA1120401602	CLAMP	2
003	DA016283390	SCREW	12
004	DA1120450021	BEVEL GEAR SET	1
005	DA005100162	BUSH	2
006	DA013011279	SHIM	1
007	DA013011281	SHIM	1
008	DA013013055	SHIM	1
009	DA013013066	SHIM	1
013	DA1120400902	SPACER	1
014	DA013013117	SHIM	1
015	DA013013118	SHIM	1
016	DA013013119	SHIM	1
017	DA013013120	SHIM	1
018	DA9530401201	CLAMP	1
019	DA001030730	O-RING	1
020	DA1120473202	FLANGE	1
021	DA001053158	O-RING	1
022	DA3571413901	NUT	1

TRANSMISSION (FRONT AXLE)
RING & PINION

FIGURE	REFERENCE	DENOMINATION	AMOUNT
023	DA016040417	BOLT	4
024	DA016041214	CYLINDER SCREW	2

TRANSMISSION (FRONT AXLE)
DIFFERENTIAL

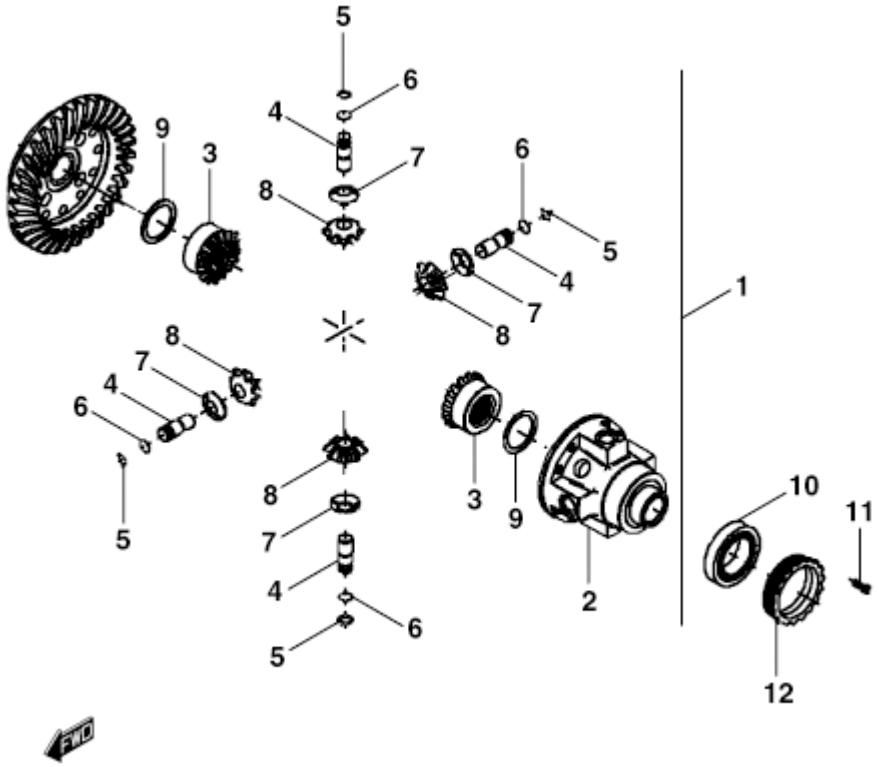

FIGURE	REFERENCE	DENOMINATION	AMOUNT
001	DA1120470201	DIFFERENTIAL	1
002	DA1120400104	DIFFERENTIAL CARRIER	1
003	DA1120400501	DIFFERENTIAL SIDE GEAR	2
004	DA1120470602	BOLT	4
005	DA002143244	CIRCLIP	4
006	DA002063163	CIRCLIP	4
007	DA1120400801	WASHER	4
008	DA1120400404	SATELLITE	4
009	DA1120400701	FRICTION WASHER	2
010	DA005091039	TAPER ROLLER BEARING	2
011	DA016041214	CYLINDER SCREW	1
012	DA1120401602	CLAMP	2

TRANSMISSION (FRONT AXLE)
REDUCTION

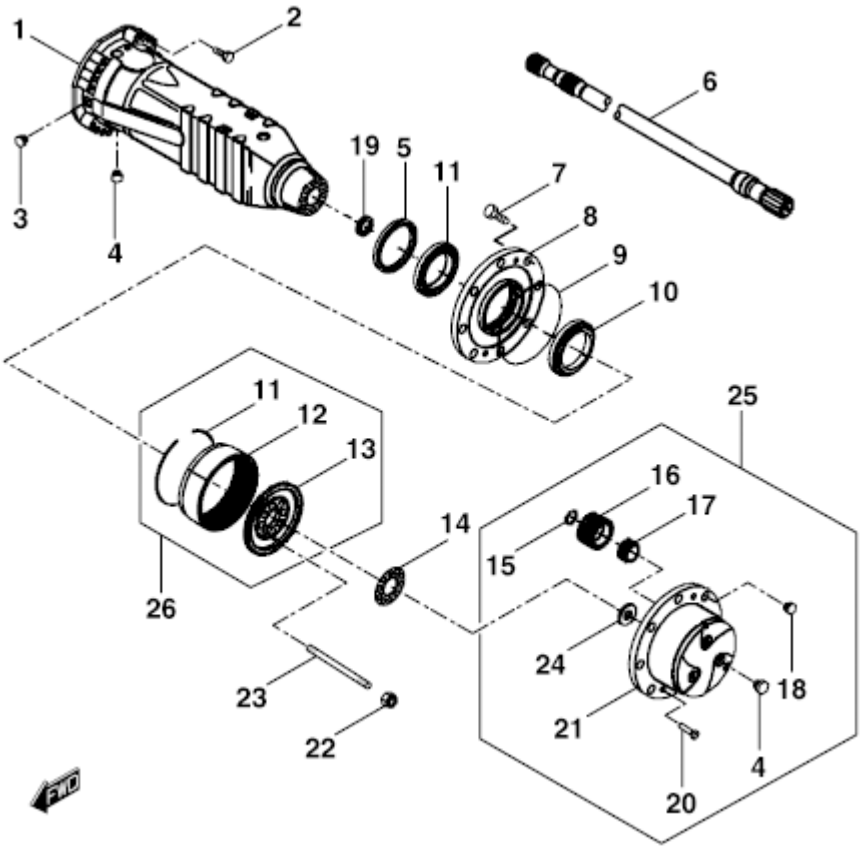

FIGURE	REFERENCE	DENOMINATION	AMOUNT
001	DA1120601821	CASE	2
002	DA1120607001	SCREW	32
003	DA1120161001	CAP	4
004	DA1120161003	MAGNET PLUG	2
005	DA1770600901	SEAL	2
006	DA1120600106	HALF SHAFT	2
007	DA9320607401	WHEEL STUD	16
008	DA1120604901	WHEEL HUB	2
009	DA001051178	O-RING	2
010	DA005103166	BUSH	4
011	DA002063193	CIRCLIP	2
012	DA1120600504	CROWN GEAR	2
013	DA1120600707	SUPPORT	2
014	DA1120602601	LOCK PLATE	2
015	DA002143191	CIRCLIP	6
016	DA1120600603	PLANET GEAR	6
017	DA1120600802	BEARING	6
018	DA006082833	WHEEL NUT	16

TRANSMISSION (FRONT AXLE)
REDUCTION

FIGURE	REFERENCE	DENOMINATION	AMOUNT
019	DA001403167	SEAL	2
020	DA016060442	SCREW	4
021	DA1120605004	PLANET GEAR CARRIER	2
022	DA006041159	NUT	16
023	DA1120602501	STUD	16
024	DA1120601702	WASHER	2
025	DA2120671019	KIT	2
026	DA2120670707	CROWN GEAR SUPPORT KIT	2

TRANSMISSION (FRONT AXLE)
BRAKE

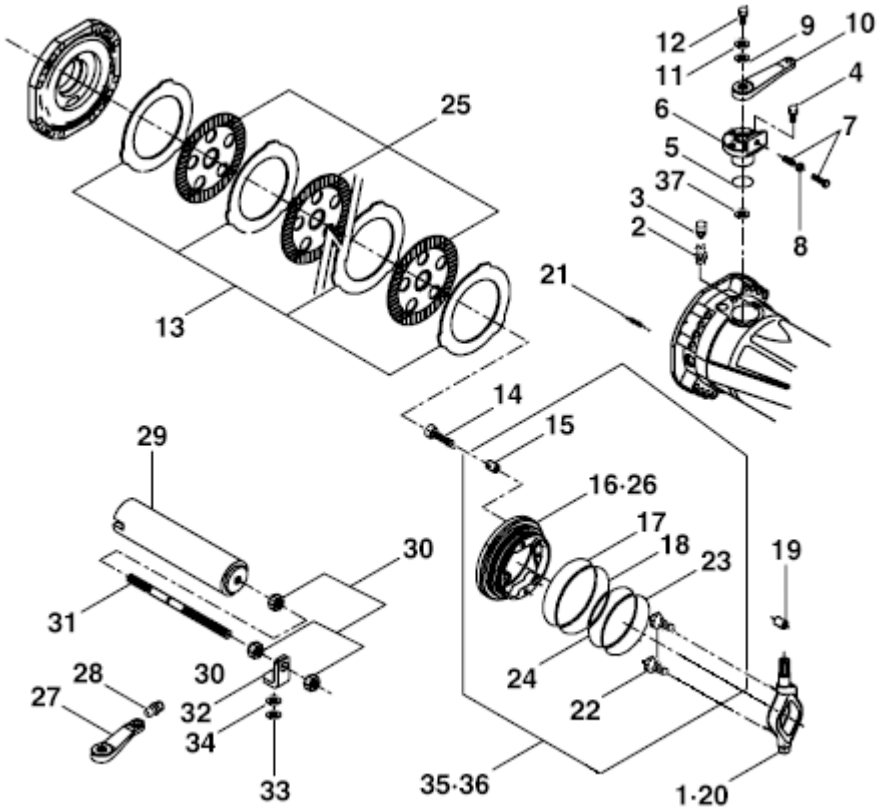

FIGURE	REFERENCE	DENOMINATION	AMOUNT
001	DA1120770101	RIGHT LEVER	1
002	DA7340701401	BOLT	2
003	DA7340701501	CAP	2
004	DA016040705	CYLINDER BOLT	6
005	DA001051494	O-RING	2
006	DA1120701504	REDUCTION BUSH	2
007	DA016082083	SCREW	2
008	DA006030195	NUT	2
009	DA001051358	O-RING	2
010	DA1120702703	LEVER	1
011	DA1710700701	WASHER	2
012	DA016060439	COUNTERSUNK BOLT	2
013	DA1120700601	INTERMEDIATE BRAKE DISC	10
014	DA1120703710	ADJUSTING SCREW	6
015	DA1120700203	SPRING	3
016	DA1120700719	LEFT PISTON	1
017	DA1120700902	RING	1
018	DA1120700802	RING	1

TRANSMISSION (FRONT AXLE)
BRAKE

FIGURE	REFERENCE	DENOMINATION	AMOUNT
019	DA014020913	DOWEL	2
020	DA1120770201	LEFT LEVER	1
021	DA1800700401	SPRING	6
022	DA7380701802	PUSHER	2
023	DA1120700901	RING	1
024	DA1120700801	O-RING	1
025	DA1120761002	BRAKE DISC	8
026	DA1120700720	RIGHT PISTON	1
027	DA1120702704	LEVER	1
028	DA008010212	GREASE FITTING	2
029	DA1120766001	WHEEL CYLINDER	1
030	DA006031196	NUT	3
031	DA1120705502	ROD	1
032	DA1710770301	SUPPORT	1
033	DA002010502	RING	1
034	DA7340703101	SPACER	1
035	DA1120770304	LEFT PISTON KIT	1
036	DA1120770303	RIGHT PISTON KIT	1
037	DA001051588	O-RING	2

TRANSMISSION (REAR AXLE)
REAR AXLE

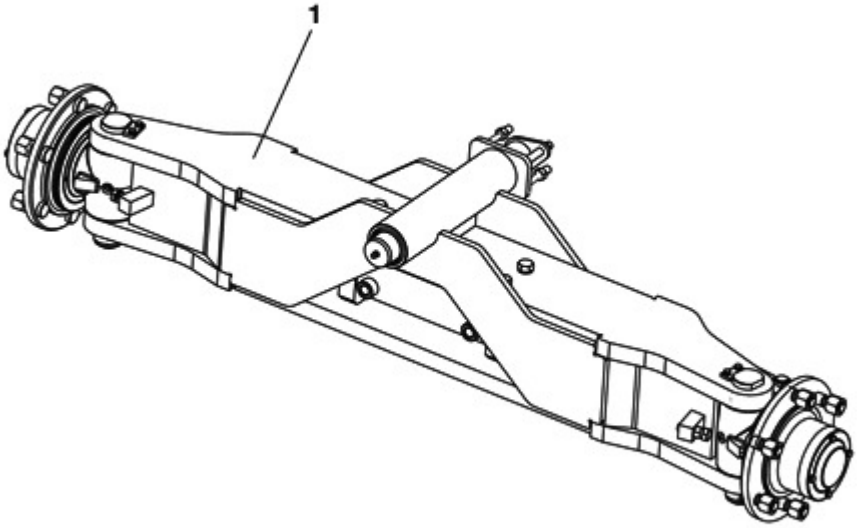

FIGURE	REFERENCE	DENOMINATION	AMOUNT
001	30.03560.00	STEERING AXLE 56º	1

TRANSMISSION (REAR AXLE)

REAR AXLE (PART 1)

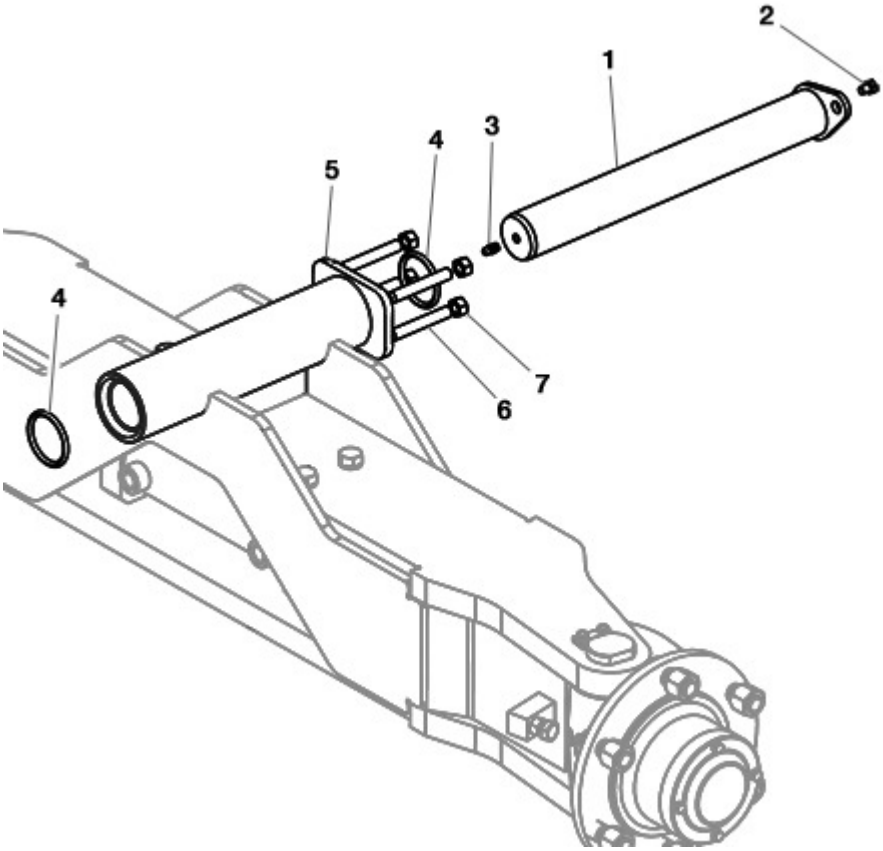

FIGURE	REFERENCE	DENOMINATION	AMOUNT
001	30.03580.00	SHAFT CIL/CIL D50X417	1
002	901.08000.33	GREASER DIN71412-A M8x1,25	1
003	603.08010.86	SCREW DIN933 M8x10	1
004	201.05153.50	O-RING DIN3770	2
005	57.04114.00	PLATE	1
006	612.12080.86	BOLT DIN914 M12x80	4
007	701.12000.66	NUT DIN934 M12x1.75	4

TRANSMISSION (REAR AXLE)
REAR AXLE (PART 2)

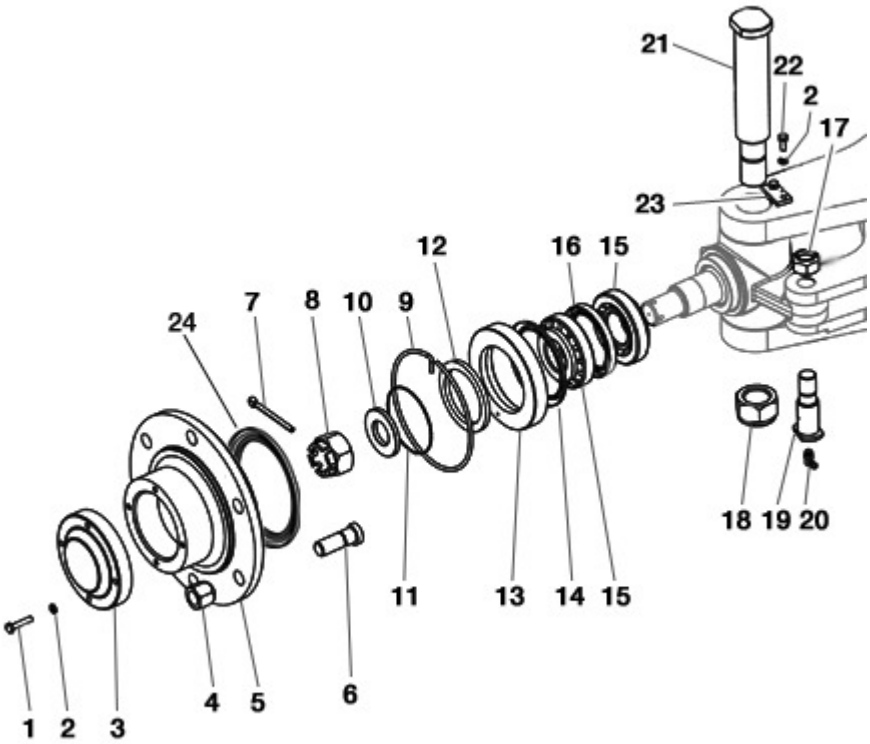

FIGURE	REFERENCE	DENOMINATION	AMOUNT
001	603.06030.86	SCREW DIN933 M6x30	8
002	104.06000.00	WASHER DIN7980 D6	12
003	30.03556.00	HUB COVER 29XD120	2
004	15.00453.00	NUT	12
005	30.03555.00	WHEEL HUB D90XD242X95 6 HOLES	2
006	15.00452.00	SCREW FASTENING WHEEL	12
007	401.06070.60	PIN DIN94 6x70	2
008	703.30000.66	NUT DIN935 M30x2	2
009	30.03552.00	RING Ø132xØ4	2
010	30.03550.00	WASHER, FIBER Ø31xØ60x6	2
011	201.08218.50	O-RING DIN3770 82,27x85,83x1,78	2
012	30.03554.00	RING Ø70x89.5	2
013	30.03551.00	NUT, WHEEL HUB 19.3xM129x1.5	2
014	202.80100.50	SEAL DIN3760	2
015	307.40026.00	BEARING DIN720 31308A	4
016	205.70010.50	SEAL DIN3760 70X90X10	2
017	720.20000.66	NUT DIN985 M20x1.5	2
018	01.01319.00	NUT DIN935 M30x2x30	2

TRANSMISSION (REAR AXLE)
REAR AXLE (PART 2)

FIGURE	REFERENCE	DENOMINATION	AMOUNT
019	30.03521.00	SHAFT D25X84	4
020	902.08000.33	GREASER DIN71412-C	2
021	30.03573.00	SHAFT D40XM30X230	2
022	603.06015.86	SCREW DIN933 M6x15	4
023	15.00832.00	PANEL	2
024	238.85075.50	GASKET	2

TRANSMISSION (REAR AXLE)

REAR AXLE (PART 3)

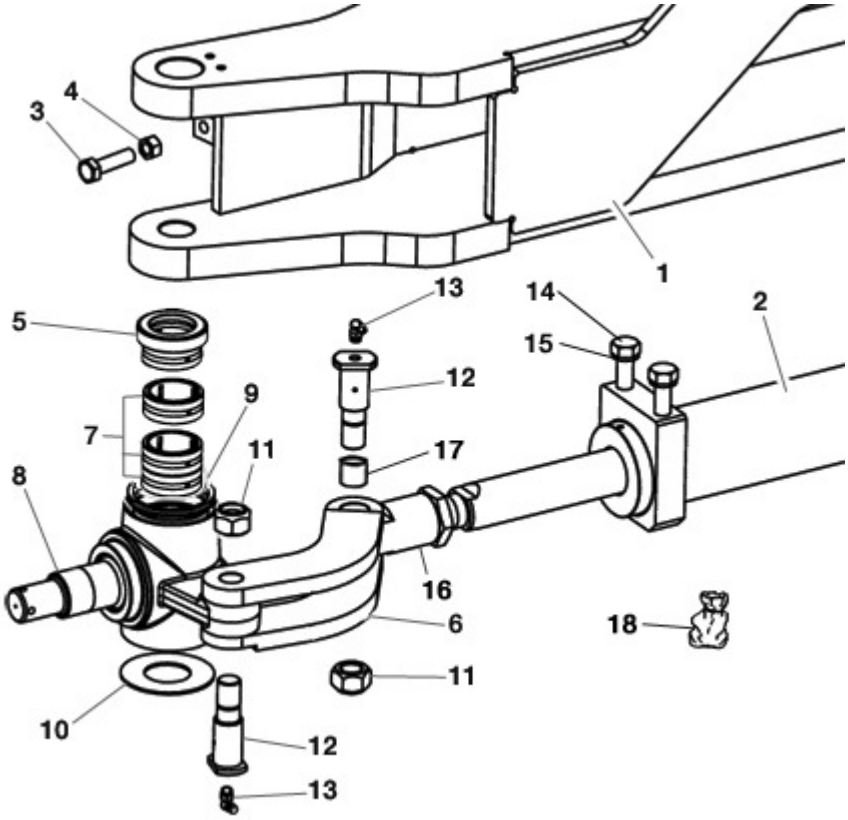

FIGURE	REFERENCE	DENOMINATION	AMOUNT
001	30.03561.00	STEERING AXLE FRAME	1
002	30.03562.00	CYLINDER D.70 C.140 L.881	1
003	603.12045.86	SCREW DIN933	2
004	701.12000.66	NUT DIN934 M12x1.75	2
005	331.40032.00	BEARING DIN5429 NKXR40-Z-A	2
006	30.03570.00	CON ROD D20-25X190	2
007	327.40020.00	BEARING DIN5412 RNA49/32	6
008	30.03571.00	LEFT STUB AXLE D82X203X122	1
008	30.03572.00	RIGHT STUB AXLE D82X203X122	1
009	219.58070.50	RING 58x68x7	2
010	30.03543.00	WASHER Ø41x82 H2	2
011	720.20000.66	NUT DIN985 M20x1.5	4
012	30.03521.00	SHAFT D25X84	4
013	902.08000.33	GREASER DIN71412-C	4
014	20.03708.00	SCREW DIN931*	4
015	104.14000.00	CIR-CLIP EXT. DIN7980	4
016	30.03522.00	SPINDLE HEAD M30X1.5-D45X95	2
017	949.02530.00	BUSHING 25x28x30 DIN 1494	2

TRANSMISSION (REAR AXLE)
REAR AXLE (PART 3)

FIGURE	REFERENCE	DENOMINATION	AMOUNT
018	30.03581.00	GASKET SET, STEERING CYLINDER	1

TRANSMISSION (REAR AXLE)

REAR AXLE (PART 3)

CHASSIS: 67458

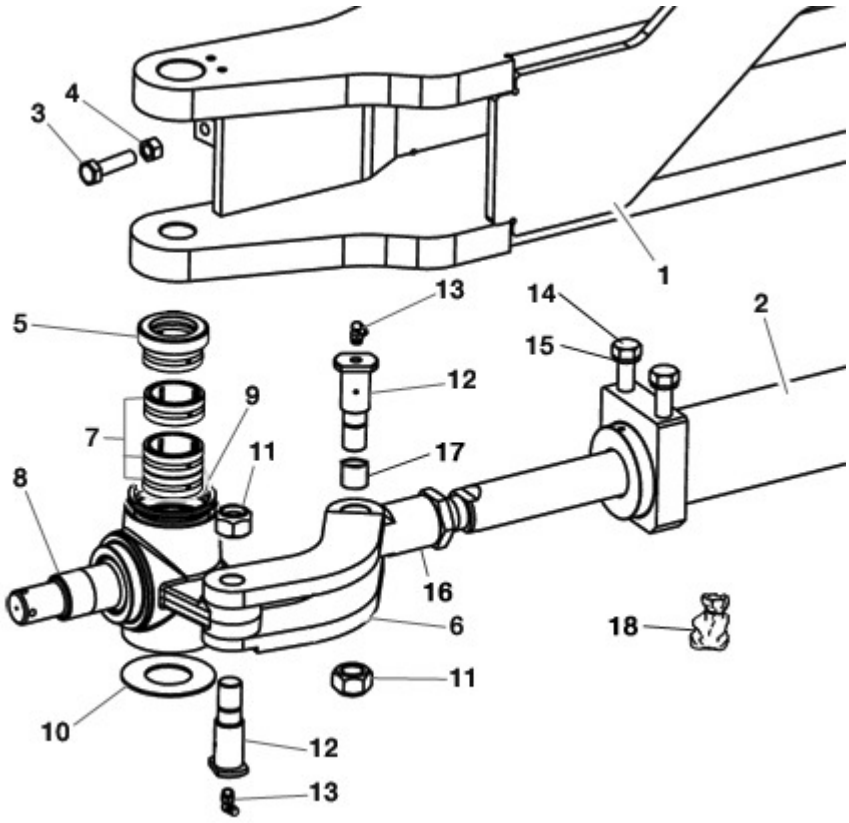

FIGURE	REFERENCE	DENOMINATION	AMOUNT
001	30.03561.00	STEERING AXLE FRAME	1
002	30.03562.00	CYLINDER D.70 C.140 L.881	1
003	603.12045.86	SCREW DIN933	2
004	701.12000.66	NUT DIN934 M12x1.75	2
005	331.40032.00	BEARING DIN5429 NKXR40-Z-A	2
006	30.03570.00	CON ROD D20-25X190	2
007	327.40020.00	BEARING DIN5412 RNA49/32	6
008	30.03571.00	LEFT STUB AXLE D82X203X122	1
008	30.03572.00	RIGHT STUB AXLE D82X203X122	1
009	219.58070.50	RING 58x68x7	2
010	30.03543.00	WASHER Ø41x82 H2	2
011	720.20000.66	NUT DIN985 M20x1.5	4
012	30.03521.00	SHAFT D25X84	4
013	902.08000.33	GREASER DIN71412-C	4
014	30.03516.00	SCREW DIN931 M14X58 ESP	4
015	104.14000.00	CIR-CLIP EXT. DIN7980	4
016	30.03522.00	SPINDLE HEAD M30X1.5-D45X95	2
017	949.02530.00	BUSHING 25x28x30 DIN 1494	2

TRANSMISSION (REAR AXLE)

REAR AXLE (PART 3)

CHASSIS: 67458

FIGURE	REFERENCE	DENOMINATION	AMOUNT
018	30.03581.00	GASKET SET, STEERING CYLINDER	1

TRANSMISSION (REAR AXLE)

REAR AXLE (PART 3)

CHASSIS: 72188

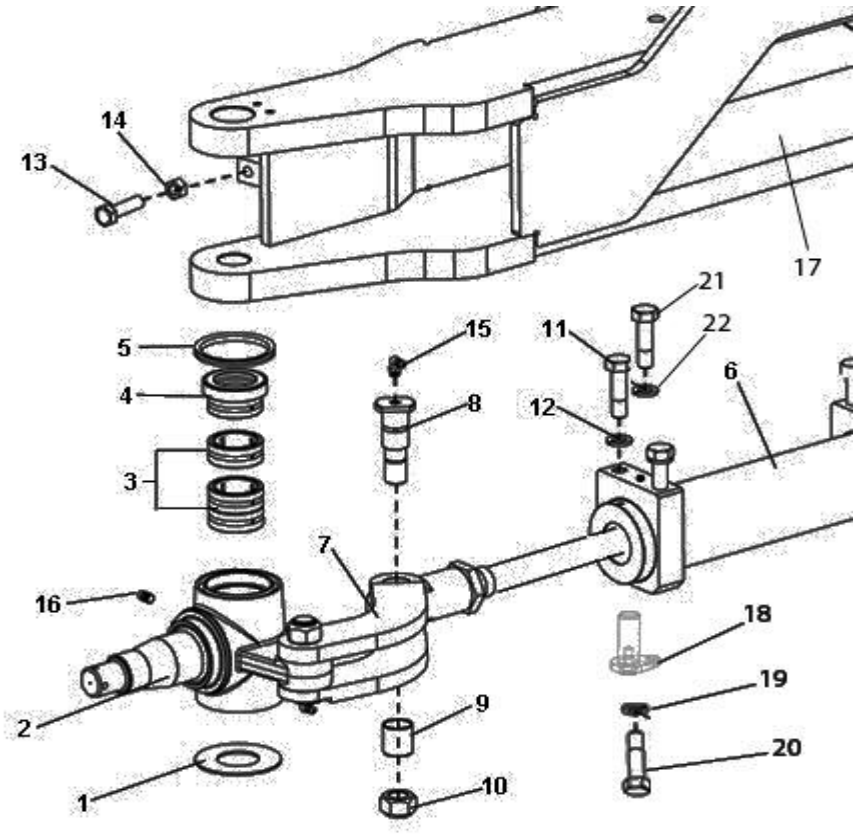

FIGURE	REFERENCE	DENOMINATION	AMOUNT
001	30.03543.00	WASHER Ø41x82 H2	2
002	30.03571.01	LEFT STUB AXLE D82X203X122	1
002	30.03572.01	RIGHT STUB AXLE D82X203X122	1
003	327.40020.00	BEARING DIN5412 RNA49/32	2
004	331.40032.00	BEARING DIN5429 NKXR40-Z-A	2
005	219.58070.50	RING 58x68x7	2
006	30.03562.02	CYLINDER D.70 C.77+77 L.881	1
007	30.03570.00	CON ROD D20-25X190	4
008	30.03521.01	SHAFT D25X84	4
009	949.02530.00	BUSHING 25x28x30 DIN 1494	4
010	720.20000.66	NUT DIN985 M20x1.5	4
011	30.03504.00	SCREW DIN931 M14X1,5X52	4
012/022	104.16000.00	CIR-CLIP EXT. DIN7980	6
013	603.12045.86	SCREW DIN933	2
014	701.12000.66	NUT DIN934 M12x1.75	2
015	902.08000.33	GREASER DIN71412-C	2
016	901.08000.33	GREASER DIN71412-A M8x1,25	2
017	30.03561.01	STEERING AXLE FRAME	1

TRANSMISSION (REAR AXLE)

REAR AXLE (PART 3)

CHASSIS: 72188

FIGURE	REFERENCE	DENOMINATION	AMOUNT
018	30.03506.00	PUSHPIN WITH PLATE	1
019	104.06000.00	WASHER DIN7980 D6	2
020	603.06015.86	SCREW DIN933 M6x15	2
021	30.03505.00	SCREW DIN931 M14X1,5X52	2

TRANSMISSION (REAR AXLE)

REAR AXLE (PART 3)

CHASSIS: 75067

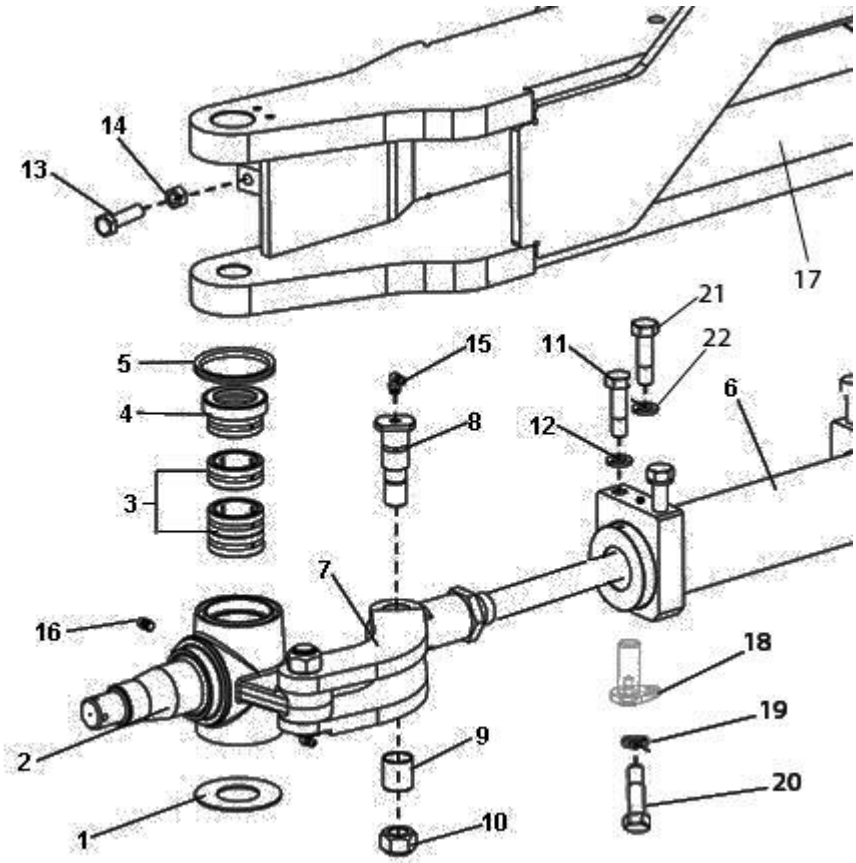

FIGURE	REFERENCE	DENOMINATION	AMOUNT
001	30.03543.00	WASHER Ø41x82 H2	2
002	30.03571.01	LEFT STUB AXLE D82X203X122	1
002	30.03572.01	RIGHT STUB AXLE D82X203X122	1
003	327.40020.00	BEARING DIN5412 RNA49/32	2
004	331.40032.00	BEARING DIN5429 NKXR40-Z-A	2
005	219.58070.50	RING 58x68x7	2
006	30.03562.02	CYLINDER D.70 C.77+77 L.881	1
007	30.03570.00	CON ROD D20-25X190	4
008	30.03521.01	SHAFT D25X84	4
009	949.02530.00	BUSHING 25x28x30 DIN 1494	4
010	720.20000.66	NUT DIN985 M20x1.5	4
011	30.03504.00	SCREW DIN931 M14X1,5X52	2
012/022	101.16000.66	WASHER DIN125 D16	2
013	603.12045.86	SCREW DIN933	2
014	701.12000.66	NUT DIN934 M12x1.75	2
015	902.08000.33	GREASER DIN71412-C	2
016	901.08000.33	GREASER DIN71412-A M8x1,25	2
017	30.03561.01	STEERING AXLE FRAME	1

018	30.03506.00	PUSHPIN WITH PLATE	1
019	104.06000.00	WASHER DIN7980 D6	2
020	603.06015.86	SCREW DIN933 M6x15	2
021	30.03505.00	SCREW DIN931 M14X1,5X52	2

TRANSMISSION (REAR AXLE)
STEERING CYLINDER MOUNTING

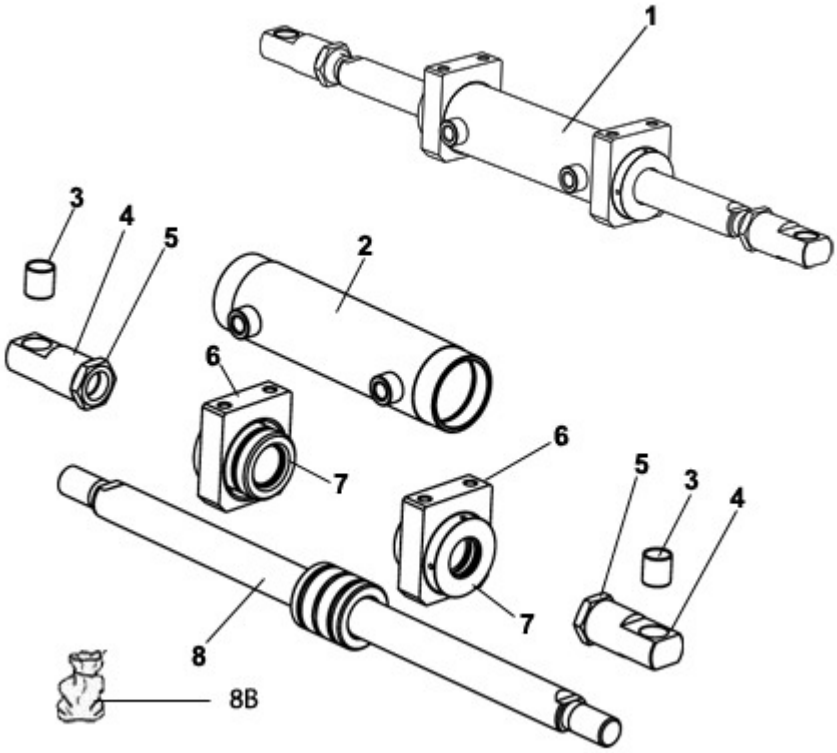

FIGURE	REFERENCE	DENOMINATION	AMOUNT
001	30.03562.00	CYLINDER D.70 C.140 L.881	1
002	30.03575.00	cilindre body	1
003	949.02530.00	BUSHING 25x28x30 DIN 1494	2
004	30.03522.00	SPINDLE HEAD M30X1.5-D45X95	2
005	702.30000.66	NUT	2
006	30.03579.00	tube guide sup. 30X108.5X93	2
007	30.03577.00	guide D70XD83X67	2
008	30.03566.00	AXLE	1

TRANSMISSION (REAR AXLE)

STEERING CYLINDER MOUNTING

CHASSIS: 72188

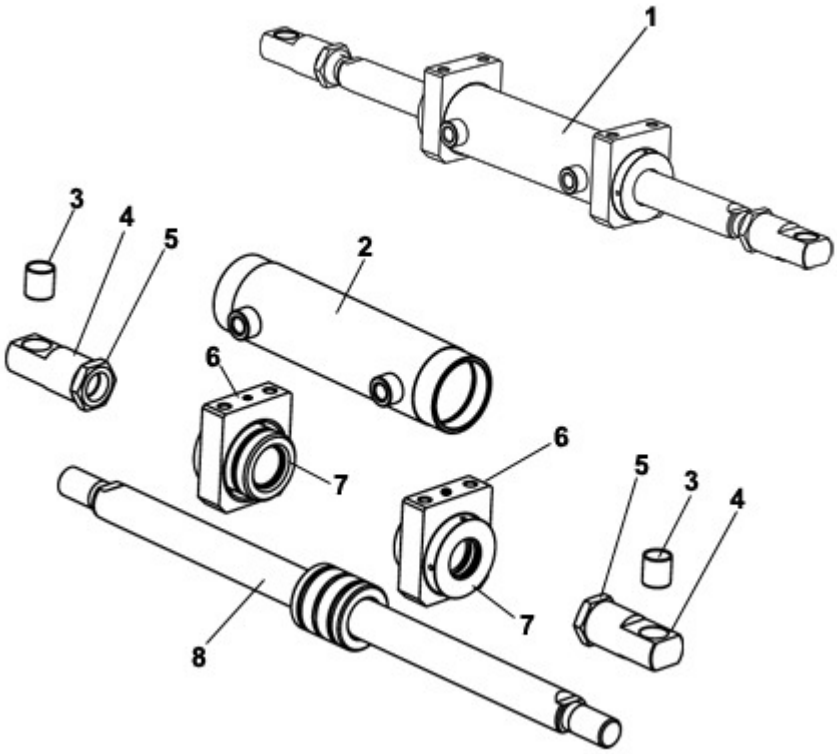

FIGURE	REFERENCE	DENOMINATION	AMOUNT
001	30.03562.02	CYLINDER D.70 C.77+77 L.881	1
002	30.03530.00	NOT AVAILABLE	1
003	949.02530.00	BUSHING 25x28x30 DIN 1494	2
004	30.03522.00	SPINDLE HEAD M30X1.5-D45X95	2
005	702.30000.66	NUT	2
006	30.03579.01	TUBE GUIDE SUP. 30X108.5X93	2
006	30.03525.00	GUIDE D70XD83X67	2
008	30.03566.01	AXLE	1

04. CHASSIS

CHASSIS

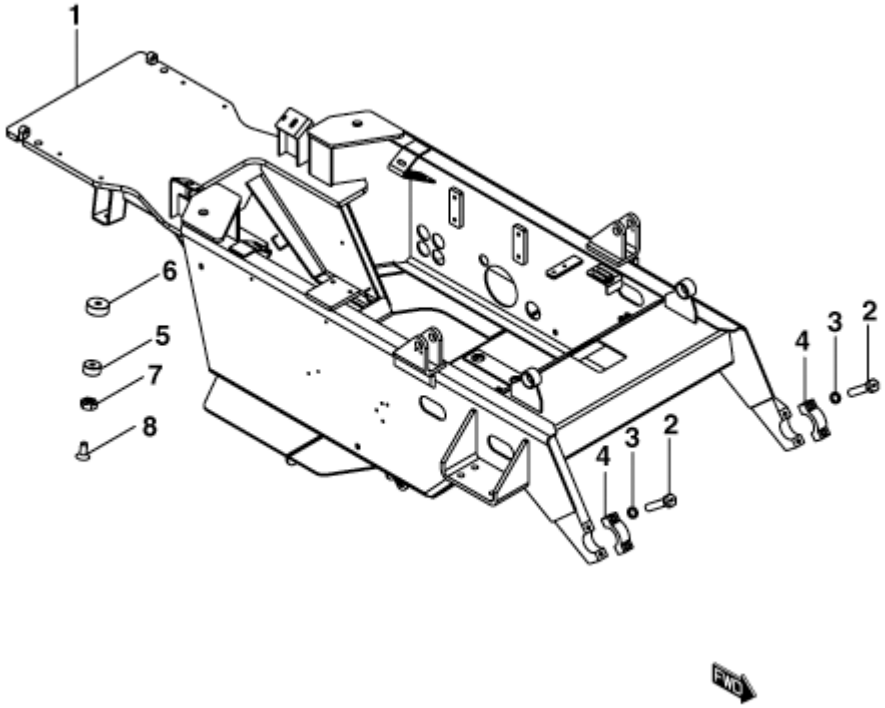

FIGURE	REFERENCE	DENOMINATION	AMOUNT
001	30.04000.00	FRAME 724x1234x2960	1
002	604.12060.96	BOLT DIN931 M12x60 12K	4
003	104.12000.00	WASHER DIN7980 D12	4
004	30.04006.00	MAST CLAMP 40X53X130	2
005	20.03002.00	BUTT	2
006	20.03003.00	SHOCK ABSORVER SUPPORT	2
007	701.16000.66	NUT	2
008	618.16030.86	SCREW DIN7991	2

04. CHASSIS
MAST BUSH

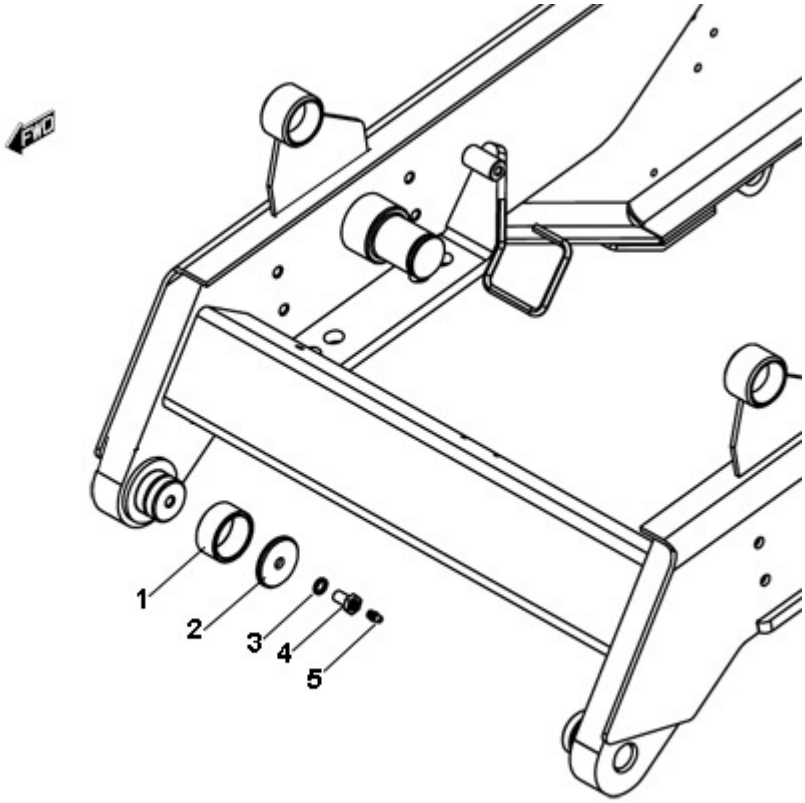

FIGURE	REFERENCE	DENOMINATION	AMOUNT
001	30.09020.00	RING D70XD60X40	2
002	30.09021.00	CAP D69XD12.5X5	2
003	104.12000.00	WASHER DIN7980 D12	2
004	10.01318.00	CYLINDER ROD HEAD	2
005	902.08000.33	GREASER DIN71412-C	2

BRAKE ACTIVATION
FOOT BRAKE

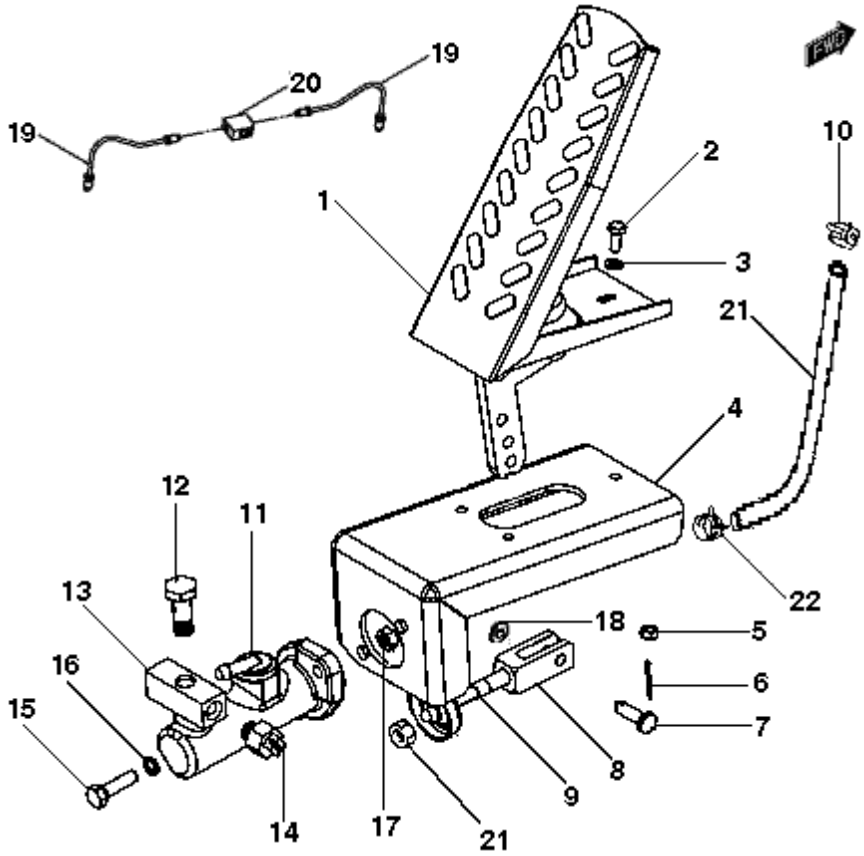

FIGURE	REFERENCE	DENOMINATION	AMOUNT
001	43.80251.00	BRAKE PEDAL	1
002	604.08030.86	SCREW DIN931	3
003	104.06000.00	WASHER DIN7980 D6	3
004	20.05225.01	BRAKE PUMP SUPPORT	1
005	701.06000.66	NUT DIN934 M6X1	3
006	401.02025.60	PIN DIN94 2x25	1
007	01.00514.01	AXLE CIL/CPA 14x8x28	1
008	20.05040.00	ART. FORK	1
009	57.05011.00	ROD STRAIGHT	1
010	912.09000.66	CLAMP	2
011	57.05010.00	BRAKE PUMP	1
012	43.70757.00	NIPPLE SCREW SIM.	1
013	20.05055.00	NIPPLE O/H/H	1
014	43.01520.00	BRAKE FLUID SWITCH	1
015	603.08030.86	SCREW DIN933 M8X30	2
016	104.08000.00	WASHER DIN7980 D8	2
017	701.08000.66	NUT DIN934 M8X1,25	2
018	112.08000.66	WASHER DIN9021 D8	1

BRAKE ACTIVATION
FOOT BRAKE

FIGURE	REFERENCE	DENOMINATION	AMOUNT
019	64.05128.00	HYDRAULIC STEEL PIPE, BUNDY 4 200X100	2
020	30.05001.00	FITTING H/H/H M12/M12/M12X1.5 FR	1
021	469.15009.00	PLASTIC HOSE 6X9	1

BRAKE ACTIVATION
TANK

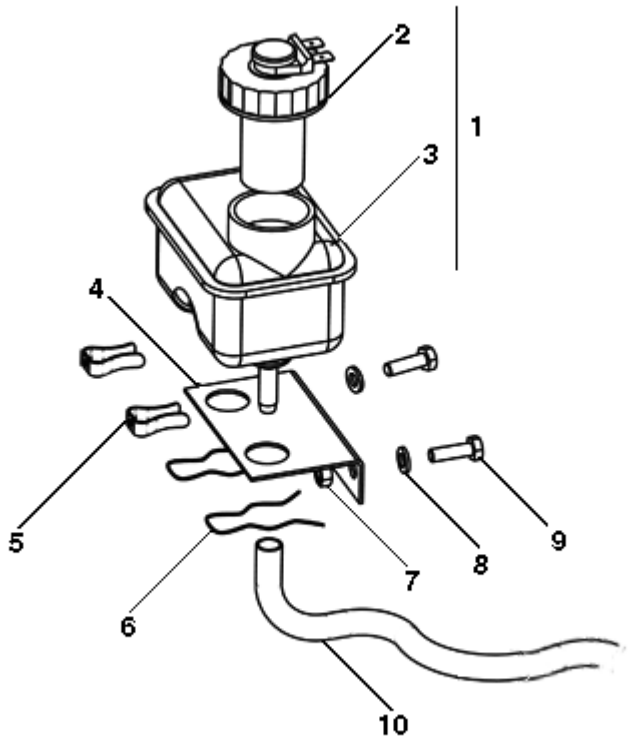

FIGURE	REFERENCE	DENOMINATION	AMOUNT
001	46.05014.00	BRAKES FLUID TANK	1
002	46.05011.00	CAP	1
003	46.05020.00	BRAKE LIQUIDE TANK	1
004	46.05015.00	ANGULAR SUPPORT	1
005	948.00907.00	CLAMP SPRING D9	2
006	46.05016.00	CLIP	2
007	701.06000.66	NUT DIN934 M6X1	2
008	104.08000.00	WASHER DIN7980 D8	2
009	469.15009.00	PLASTIC HOSE 6X9	1

06. STEERING
DIRECTION COLUMN

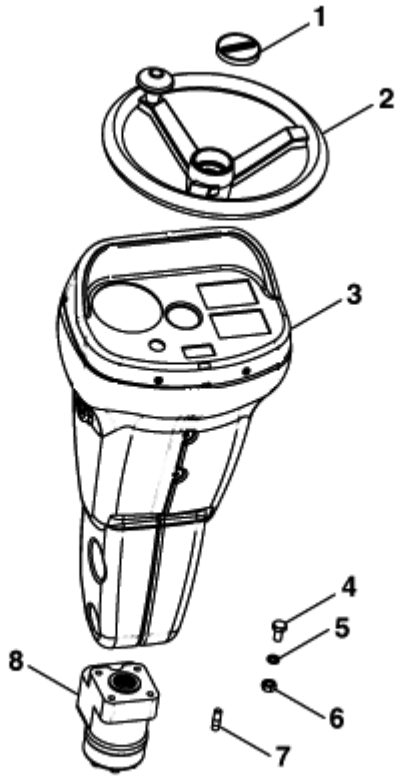

FIGURE	REFERENCE	DENOMINATION	AMOUNT
001	00.00626.03	TRIM	1
002	15.01016.01	STEERING WHEEL D21-315 WITH POMMEL	1
003	12.06020.01	COLUMNA DIREC.	1
004	603.10020.86	SCREW DIN933 M10x20	4
005	104.10000.00	WASHER DIN7980 D10	8
006	701.10000.66	NUT DIN934 M10x1.5	4
007	15.00435.01	STUD DIN938 33 M10x1.5	4
008	43.70613.01	HYDROSTATIC STEERING 100 CC	1

06. STEERING

STEERING (PART 1)

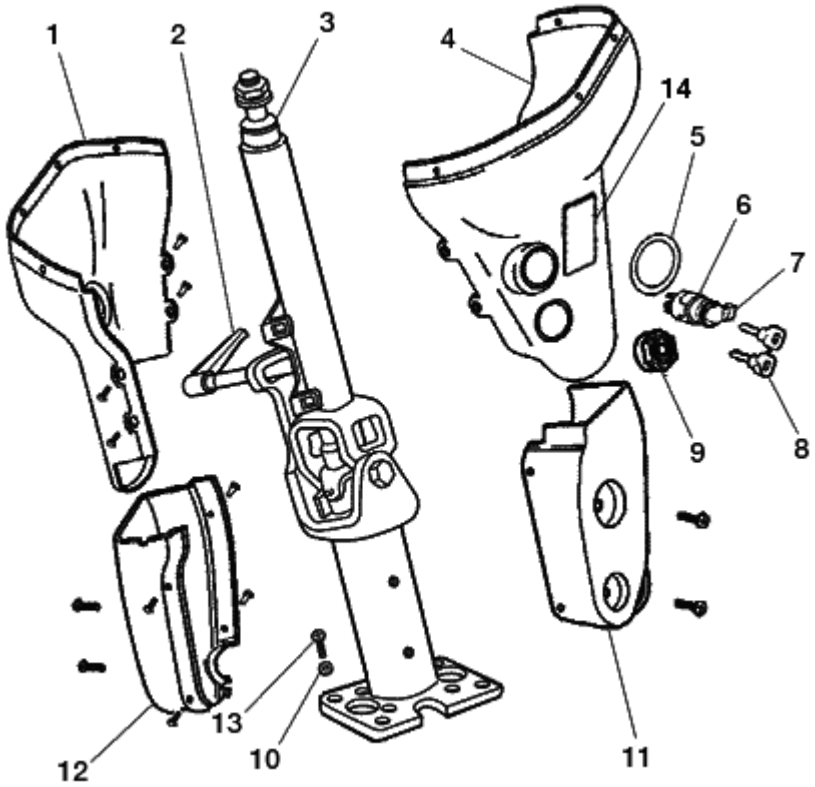

FIGURE	REFERENCE	DENOMINATION	AMOUNT
001	12.11026.00	TAPA. IZQ. COLUMNA	1
002	IM.20041.00	LEVER	1
003	12.11037.00	NOT AVAILABLE	1
004	12.11027.00	TAPA. DCHA. COLUMNA	1
005	12.11042.00	INDICADOR ARRANQUE	1
006	IM.20024.00	SWITCH	1
007	12.11034.00	PROTECTOR CONMUT. ARRANQUE	1
008	IM.20032.00	KEY	1
009	12.11033.00	HORN KPE650	1
010	104.10000.00	WASHER DIN7980 D10	4
011	12.11029.00	TAPA. DCHA. PIE COLUMNA	1
012	12.11028.00	TAPA. IZQ. PIE COLUMNA	1
013	603.10020.86	SCREW DIN933 M10x20	4
014	IM.20022.00	FUSE BOX	1

06. STEERING
STEERING (PART 2)

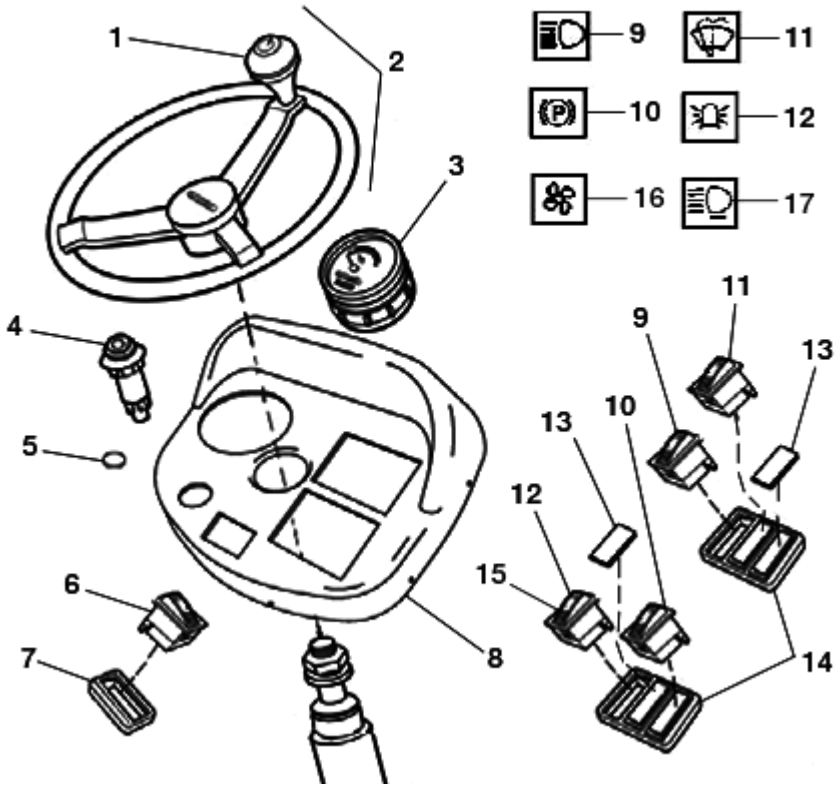

FIGURE	REFERENCE	DENOMINATION	AMOUNT
001	15.10161.01	KNOB	1
002	15.01016.01	STEERING WHEEL D21-315 WITH POMMEL	1
003	12.11023.00	INDICADOR D.100 9 ESPIAS	1
004	12.11015.00	WARNING SWITCH	1
005	12.11038.00	CAP D.30	1
006	12.11016.00	FLASHER	1
008	12.11025.00	TABLIER SOPORTE	1
009	12.11017.00	SWITCH	1
010	57.11008.00	HAND BRAKE SWITCH	1
011	12.11014.00	SWITCH	1
012	12.11031.00	INTERRUPTOR IP67	1
013	12.11024.00	SWITCH CAP	6
014	12.11030.00	SOP. FIJACION INTERRUPTOR	2
015	12.11043.00	GLASS	1
016	12.11020.00	SWITCH	1
017	IM.20016.00	WORKING LIGHT SWITCH	1

06. STEERING

STEERING (PART 4)

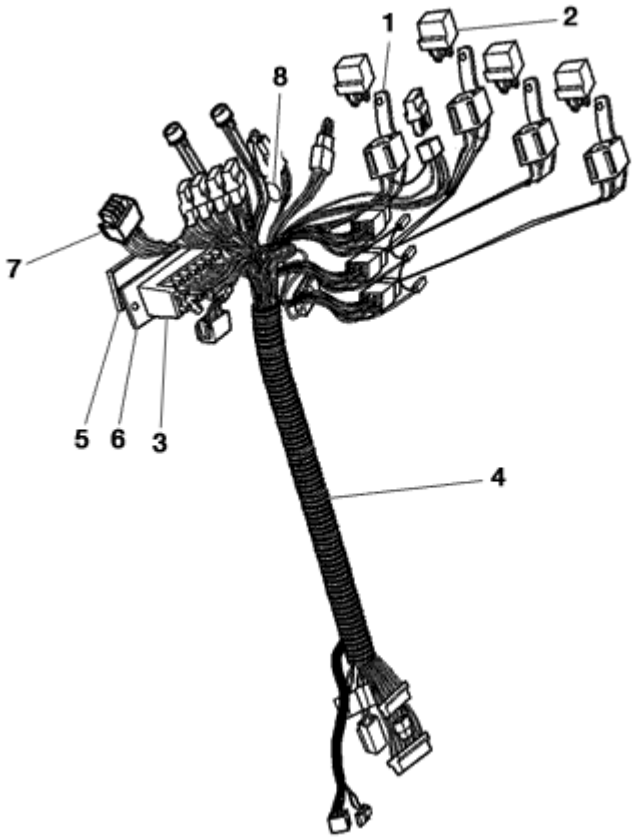

FIGURE	REFERENCE	DENOMINATION	AMOUNT
001	IM.20025.00	INTERMITTENCE BOX	1
002	IM.20026.03	MICRO RELAY WITH DIODE	1
003	IM.20022.00	FUSE BOX	1
004	12.11003.01	NOT AVAILABLE	1
005	IM.20033.00	COVER	1
006	IM.20023.00	FIXING SUPPORT	1
007	IM.20042.00	CAJA. DIODOS 12 VIAS	1

07. WHEELS
FRONT WHEELS

FIGURE	REFERENCE	DENOMINATION	AMOUNT
001	30.07010.00		2
002	30.07011.00	TIRE LS 18-19,5 16 PR	2
003	30.07012.00	RIM 9.00X22.5	2
004	70.07025.00	TR413 TUBELESS VALVE	2

07. WHEELS
REAR WHEELS

FIGURE	REFERENCE	DENOMINATION	AMOUNT
001	30.07025.00	FULL WHEEL 8.15-15	2
002	30.07027.00	RIM 6.5X15	2
003	70.07023.00	TUBELESS VALVE TR415	1

08. BODYWORK

ENGINE COVER

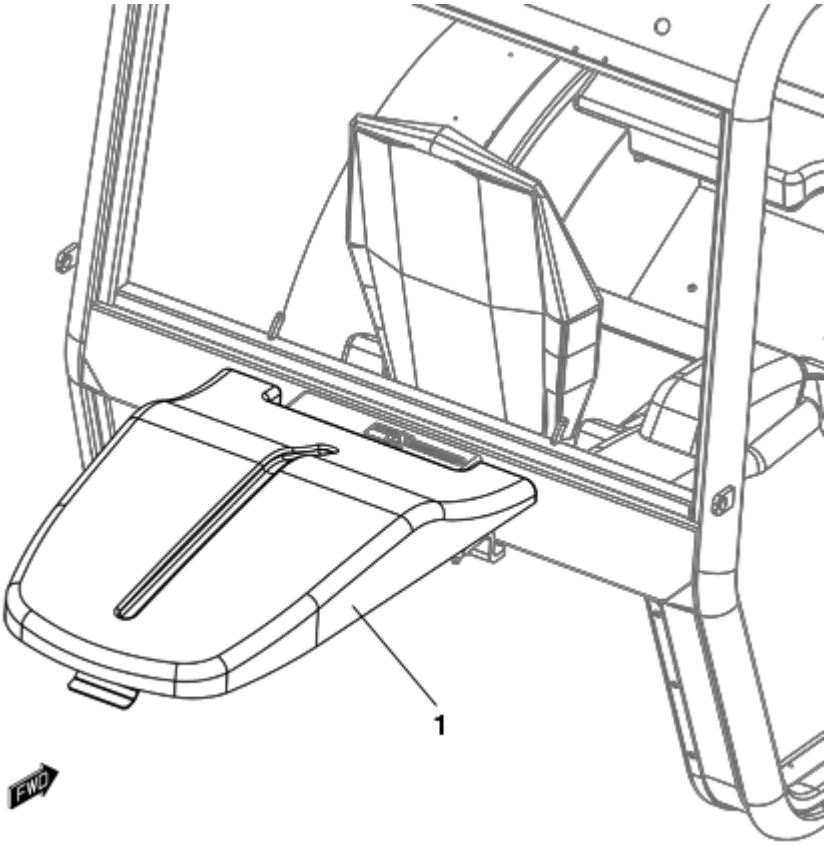

FIGURE	REFERENCE	DENOMINATION	AMOUNT
001	30.08014.00	COUNTERWEIGHT COVER 114X535X773	1

08. BODYWORK

ENGINE COVER

CHASSIS: 76536

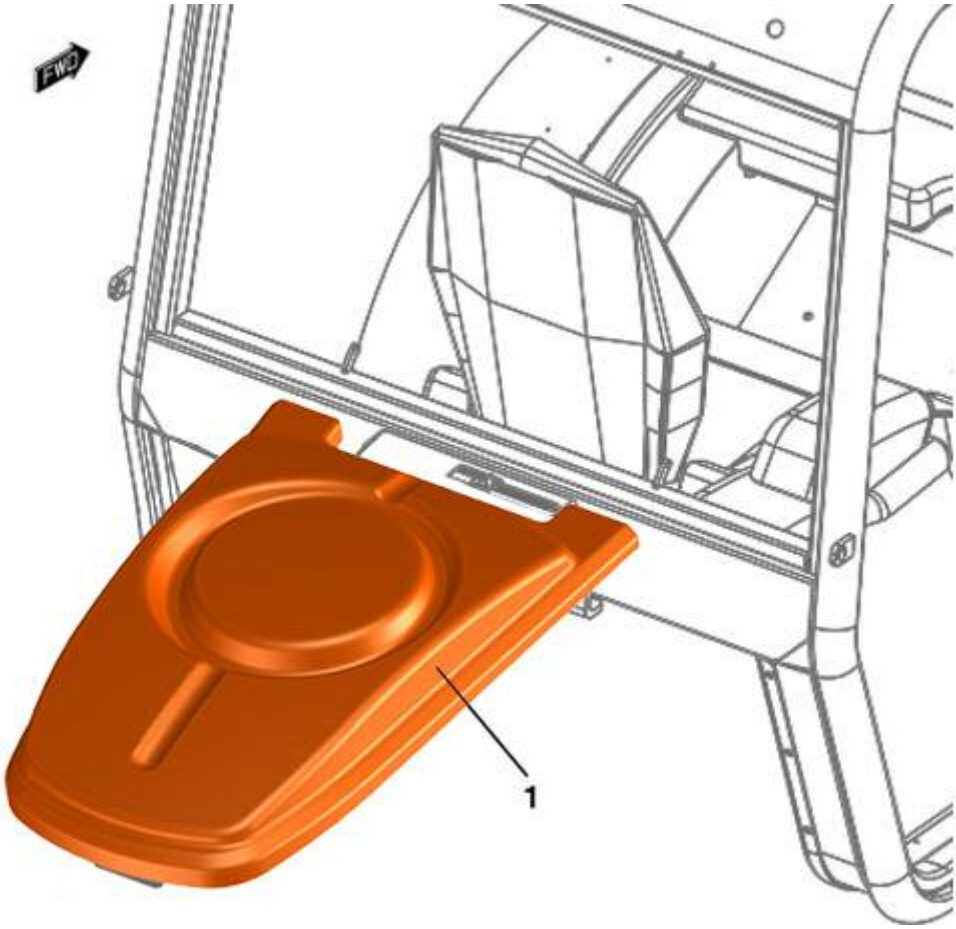

FIGURE	REFERENCE	DENOMINATION	AMOUNT
001	30.08050.00	COUNTER TOP	1

COMMENTS

MOD.4416A

08. BODYWORK
FRONT SHEETS

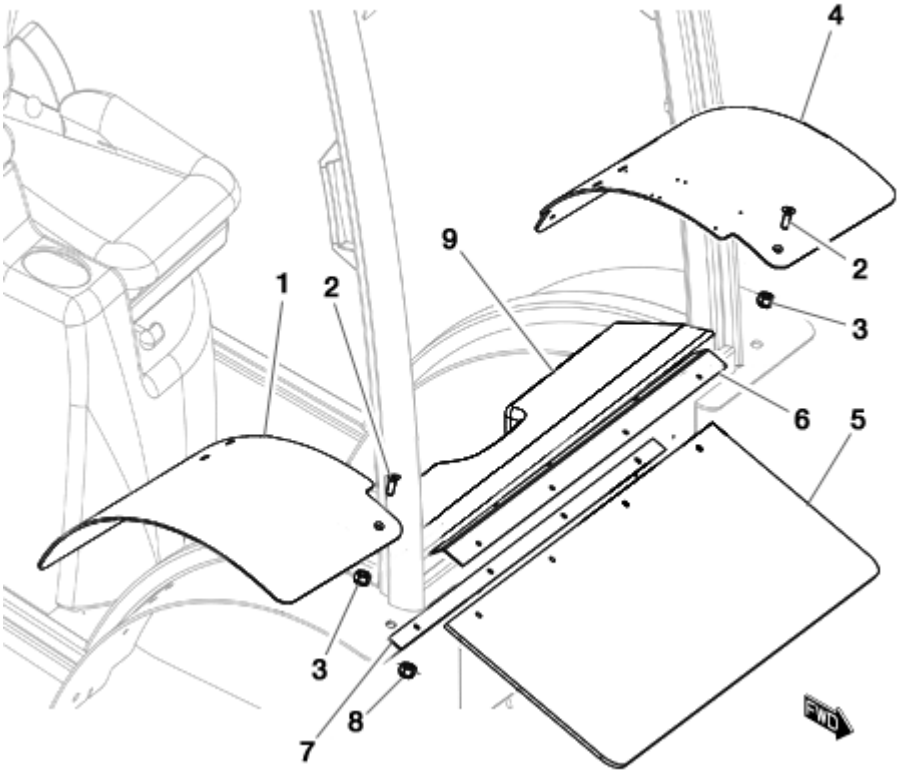

FIGURE	REFERENCE	DENOMINATION	AMOUNT
001	57.08060.00	SUPPLEMENT	1
002	618.08025.86	SCREW DIN7991	8
003	711.08000.66	NUT DIN982 M8	8
004	57.08061.00	SUPPLEMENT	1
005	30.08030.00	GUARD 5X290X796	1
006	30.08031.00	BRACKET ANG. 2X50X790	1
007	30.08032.00	STRIP SUPPORT 2X20X790	1
008	711.05000.66	NUT DIN982 M5	3
009	57.08008.00	SUPPORT COVER	1

08. BODYWORK
ENGINE PROTECTOR

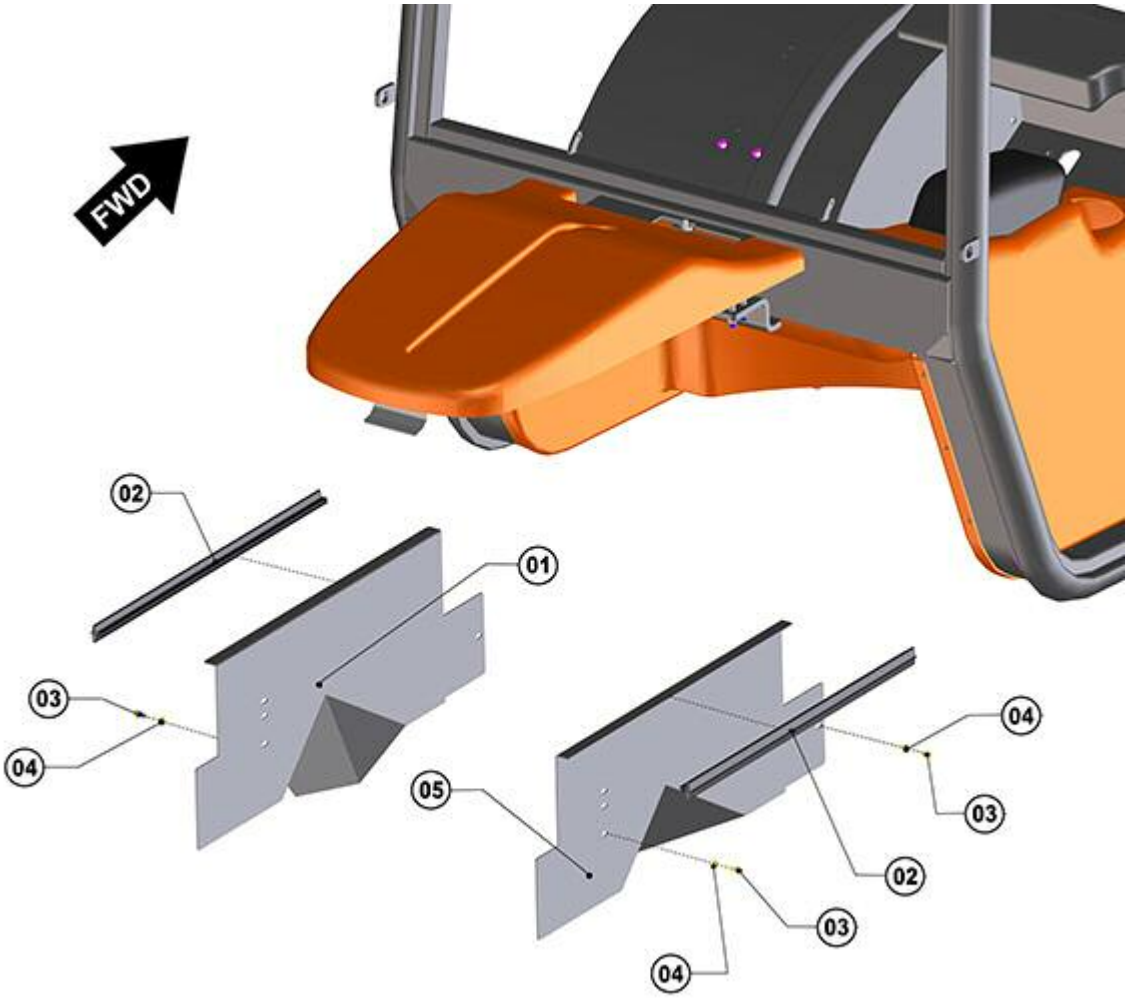

FIGURE	REFERENCE	DENOMINATION	AMOUNT
001	30.08020.00	LEFT ENGINE PROTECTOR 2X292X777	1
002	472.00411.00	RUBBER PROFILE MAT.	2
003	603.06015.86	SCREW DIN933 M6x15	4
004	101.06000.66	WASHER DIN125 D6	4
005	30.08021.00	RIGHT ENGINE PROTECTOR 2X292X777	1

08. BODYWORK

ENGINE PROTECTOR

CHASSIS: 76536

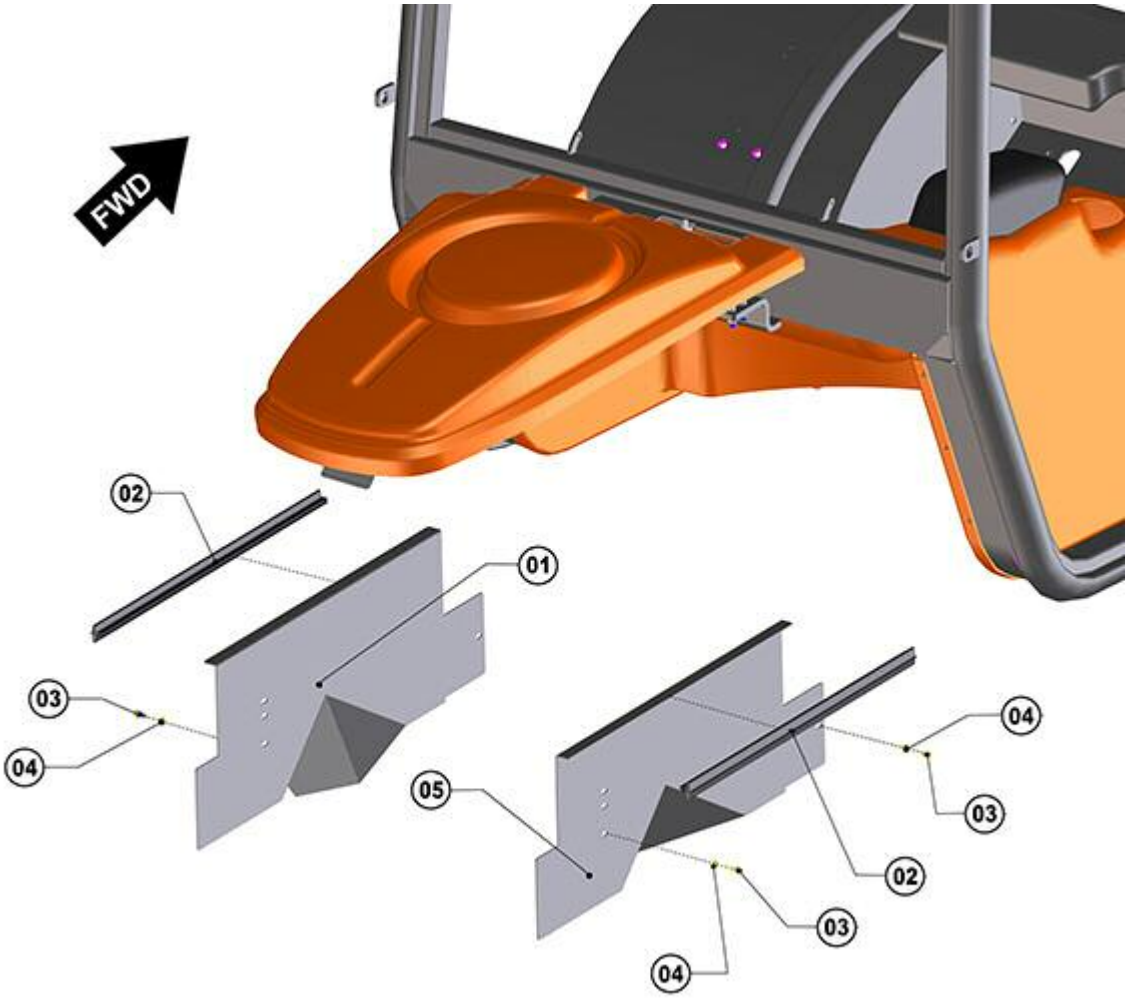

FIGURE	REFERENCE	DENOMINATION	AMOUNT
001	30.08020.01	2X292X777 MOTOR PROTECTOR LEFT	1
002	472.00411.00	RUBBER PROFILE MAT.	2
003	603.06015.86	SCREW DIN933 M6x15	4
004	101.06000.66	WASHER DIN125 D6	4
005	30.08021.01	MOTOR PROTECTOR RIGHT 2X292X777	1

COMMENTS

MOD.4416A

08. BODYWORK
CAB SHUTTER

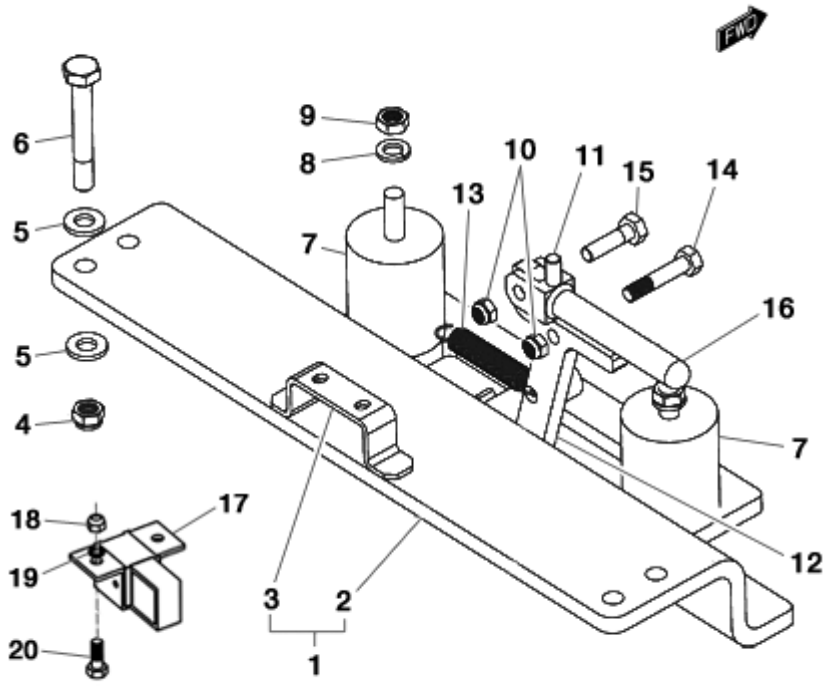

FIGURE	REFERENCE	DENOMINATION	AMOUNT
001	30.08024.00	CABIN SUPPORT ASSY 63X196X430	1
002	30.08023.00	FIXING SUPPORT	1
003	57.08018.00	FIXING SUPPORT	1
004	711.10000.66	SHOCK ABSORBER	4
005	101.10000.66	WASHER DIN125 D10	8
006	604.10070.86	BOLT DIN931 M10x70	4
007	08.00107.02	BUTT	2
008	104.10000.00	WASHER DIN7980 D10	2
009	701.10000.66	NUT DIN934 M10x1.5	2
010	711.08000.66	NUT DIN982 M8	2
011	57.08026.00	SHAFT	1
012	57.08023.00	PAWL	1
013	01.00223.00	SPRING TENSION	1
014	604.08040.86	SCREW DIN931	1
015	604.08030.86	SCREW DIN931	1
016	57.08024.00	ACC. LEVER	1
017	01.01925.00	LATCH	1
018	701.05000.66	NUT DIN934 M5x0.8	2

08. BODYWORK
CAB SHUTTER

FIGURE	REFERENCE	DENOMINATION	AMOUNT
019	104.05000.00	WASHER DIN7980 D5	2
020	603.05015.86	SCREW DIN933	2

08. BODYWORK

CAB SHUTTER

CHASSIS: 76536

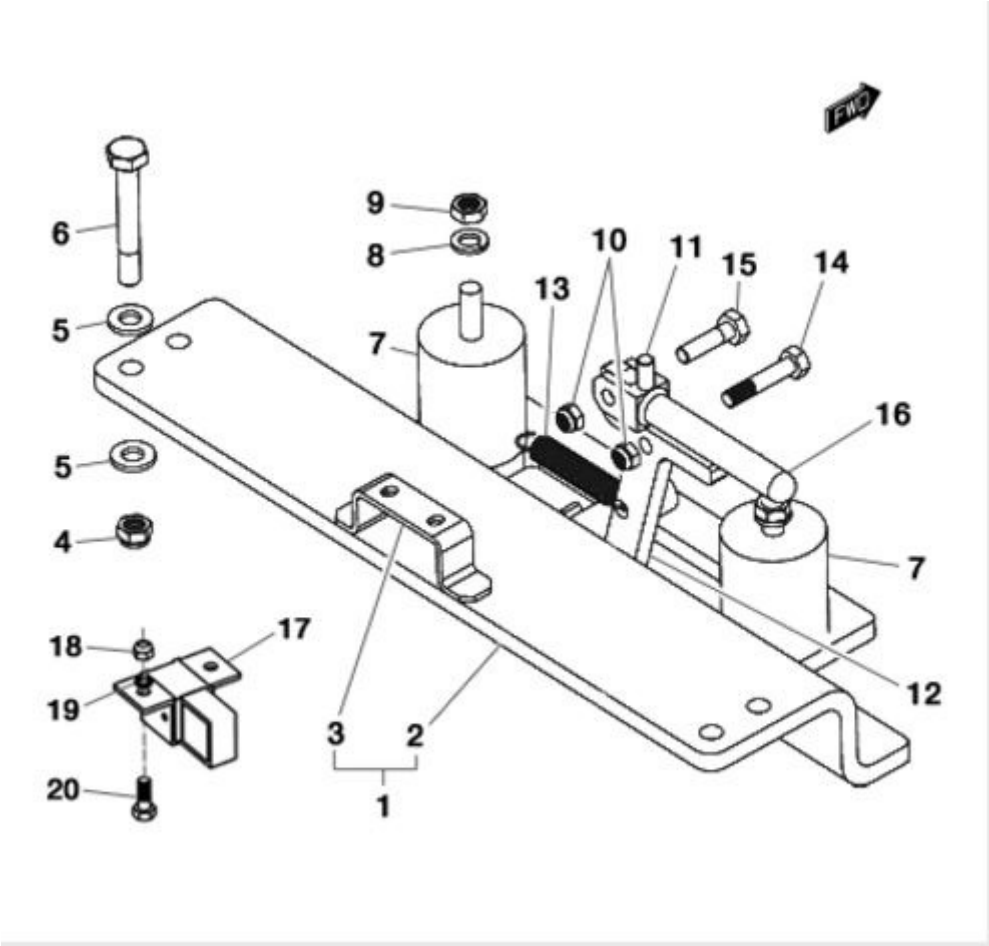

FIGURE	REFERENCE	DENOMINATION	AMOUNT
001	30.08024.01	FIXING BRACKET CLOSE CABIN	1
003	57.08018.00	FIXING SUPPORT	1
004	711.10000.66	SHOCK ABSORBER	4
005	101.10000.66	WASHER DIN125 D10	8
006	604.10070.86	BOLT DIN931 M10x70	4
007	08.00107.02	BUTT	2
008	104.10000.00	WASHER DIN7980 D10	2
009	701.10000.66	NUT DIN934 M10x1.5	2
010	711.08000.66	NUT DIN982 M8	2
011	57.08026.00	SHAFT	1
012	57.08023.00	PAWL	1
013	01.00223.00	SPRING TENSION	1
014	604.08040.86	SCREW DIN931	1
015	604.08030.86	SCREW DIN931	1
016	57.08024.00	ACC. LEVER	1
017	01.01925.00	LATCH	1
018	701.05000.66	NUT DIN934 M5x0.8	2

019	104.05000.00	WASHER DIN7980 D5	2
020	603.05015.86	SCREW DIN933	2

COMMENTS

MOD.4416A

08. BODYWORK
SEAT

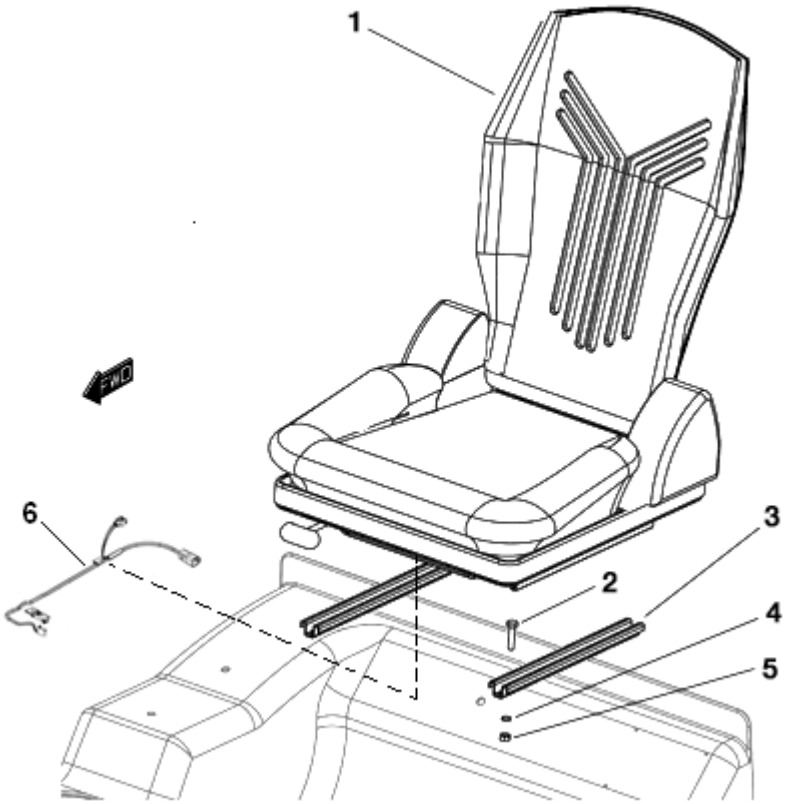

FIGURE	REFERENCE	DENOMINATION	AMOUNT
001	57.08003.00	DRIVER SEAT	1
002	603.08035.86	SCREW DIN933	6
003	57.08072.00	SUPPORT	2
004	104.08000.00	WASHER DIN7980 D8	6
005	701.08000.66	NUT DIN934 M8X1,25	6
006	57.08073.00	driver seat sensor	1

08. BODYWORK

SEAT

CHASSIS: 69383

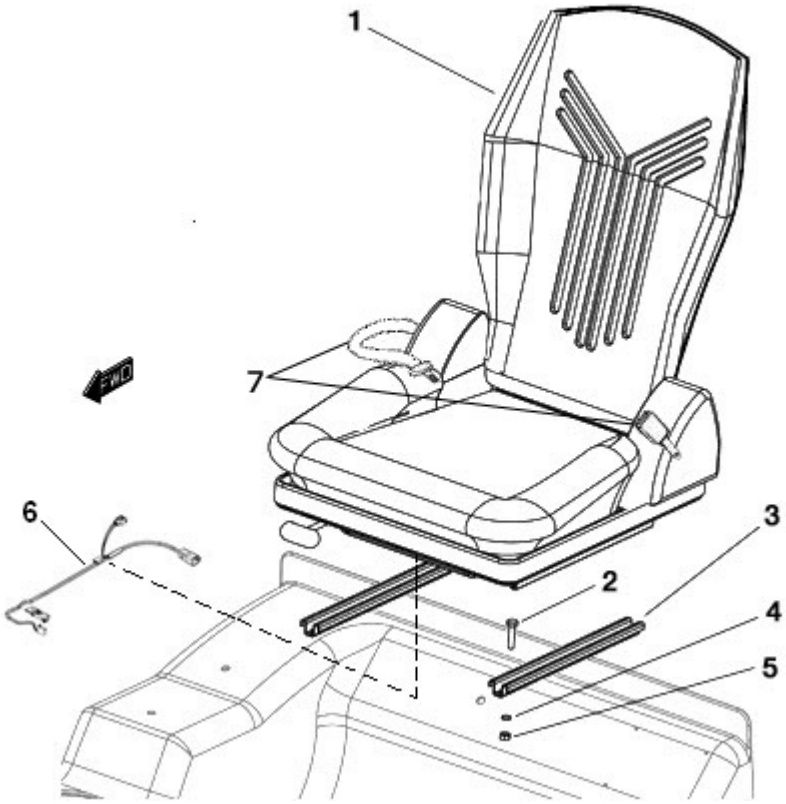

FIGURE	REFERENCE	DENOMINATION	AMOUNT
001	57.08003.01	DRIVER SEAT	1
002	603.08035.86	SCREW DIN933	6
003	57.08072.00	SUPPORT	2
004	104.08000.00	WASHER DIN7980 D8	6
005	701.08000.66	NUT DIN934 M8X1,25	6
006	57.08073.00	driver seat sensor	1
007	57.08003.91	SEAT BELT	1

08. BODYWORK

PROTECTEUR MOTEUR

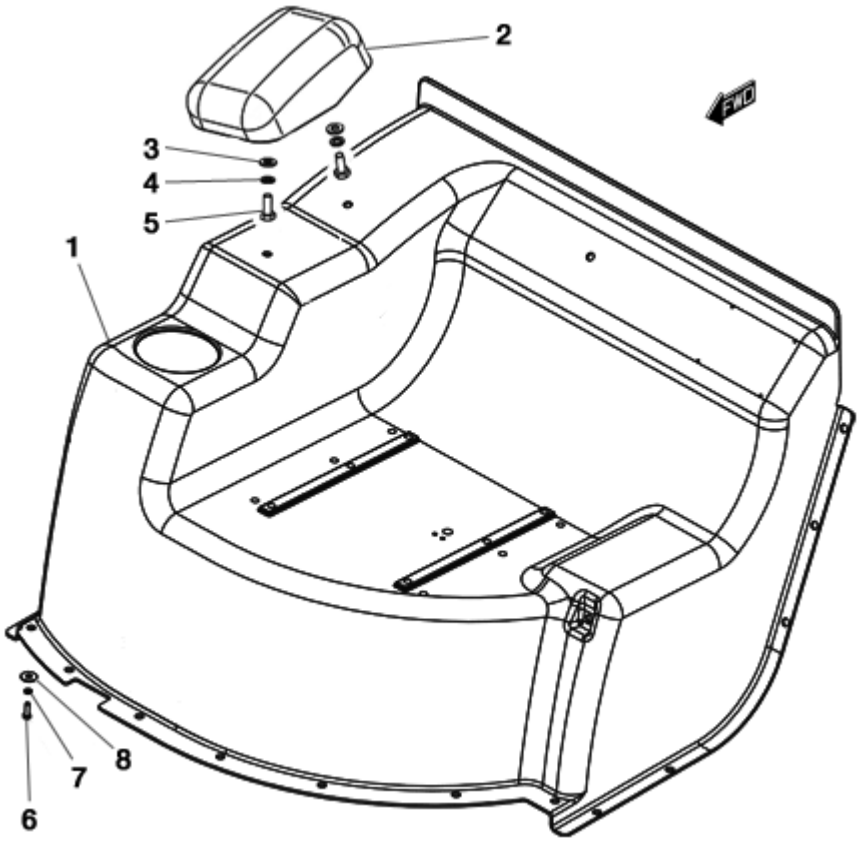

FIGURE	REFERENCE	DENOMINATION	AMOUNT
001	12.08002.00	TRANS. GUARD TRANS. 625X820X924 (CH 250)	1
002	12.08003.00	COVERT	1
003	101.10000.66	WASHER DIN125 D10	2
004	104.10000.00	WASHER DIN7980 D10	2
005	603.10025.86	SCREW DIN933 M10x25	2
006	603.06020.86	SCREW DIN933 M6x20	19
007	104.06000.00	WASHER DIN7980 D6	19
008	112.07000.66	WASHER DIN9021 Ø7	19

08. BODYWORK

PROTECTEUR MOTEUR

CHASSIS: 67347

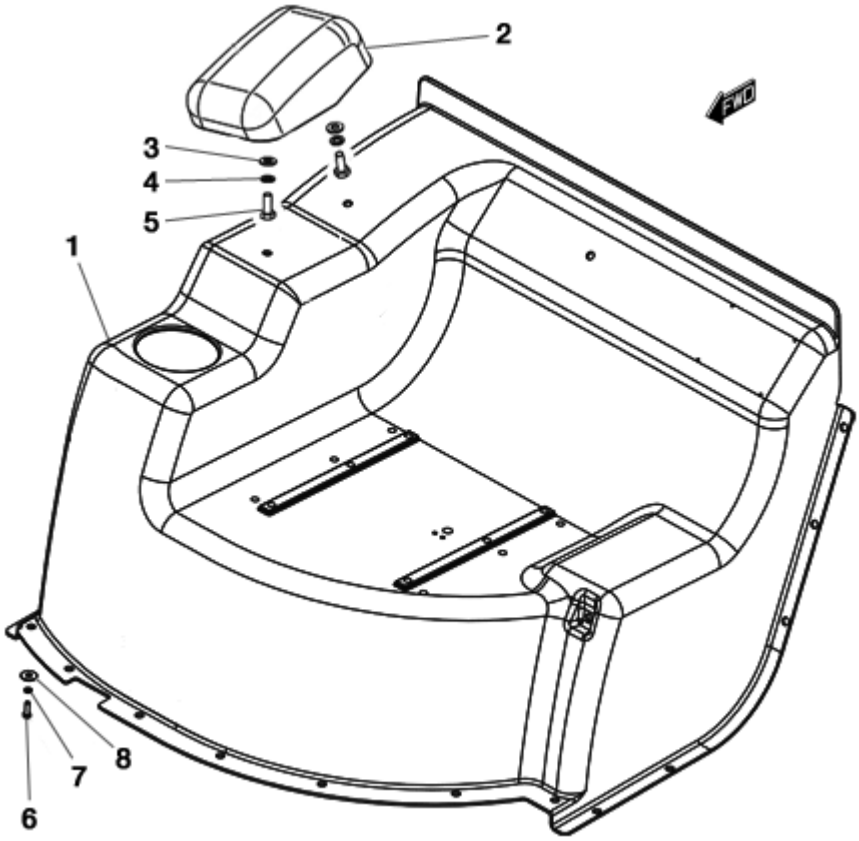

FIGURE	REFERENCE	DENOMINATION	AMOUNT
001	12.08002.10	TRANS. PROT. 625X820X924	1
002	12.08003.00	COVERT	1
003	101.10000.66	WASHER DIN125 D10	2
004	104.10000.00	WASHER DIN7980 D10	2
005	603.10025.86	SCREW DIN933 M10x25	2
006	603.06020.86	SCREW DIN933 M6x20	19
007	104.06000.00	WASHER DIN7980 D6	19
008	112.07000.66	WASHER DIN9021 Ø7	19

08. BODYWORK
CABIN SUPPORTS

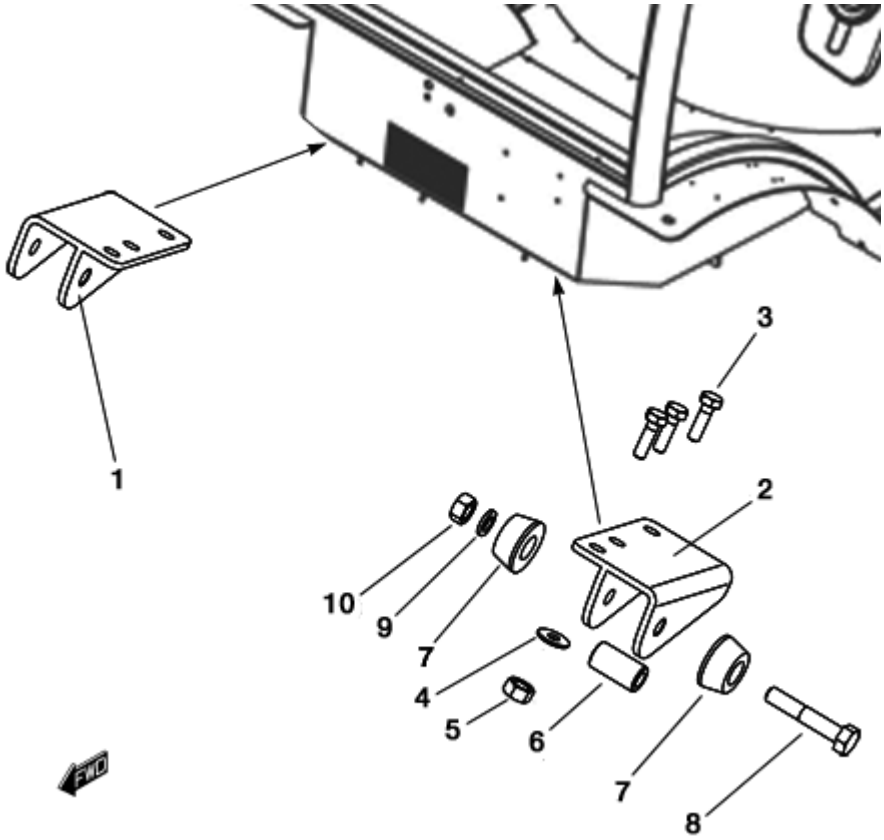

FIGURE	REFERENCE	DENOMINATION	AMOUNT
001	20.08010.01	SUPPORT ART.	1
002	20.08009.01	SUPPORT ART.	1
003	604.10035.86	SCREW DIN931	6
004	112.10000.66	WASHER DIN9021 D10	6
005	711.10000.66	SHOCK ABSORBER	6
006	15.00114.00	BUSH	2
007	15.00113.00	SHOCK DAMPER 22X47X22.5 GOMA	4
008	604.14070.86	SCREW DIN931 M14x70	2
009	104.14000.00	CIR-CLIP EXT. DIN7980	2
010	701.14000.66	NUT DIN934 M14x2	2

08. BODYWORK
COUNTERWEIGHT

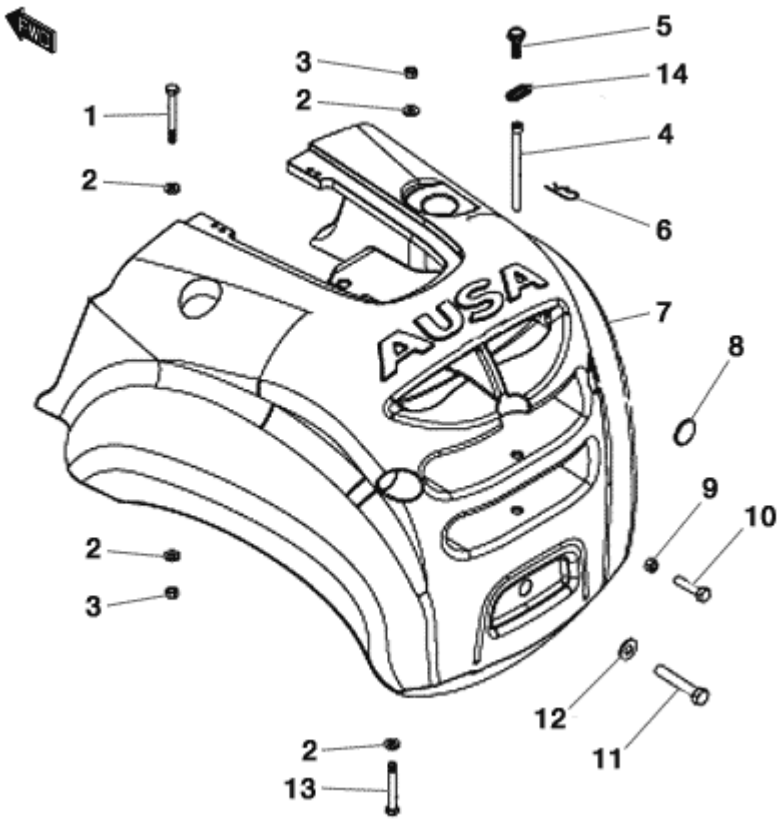

FIGURE	REFERENCE	DENOMINATION	AMOUNT
001	604.20180.86	SCREW DIN931	2
002	15.00561.00	WASHER DIN125 20.5x45x5	8
003	711.20000.66	NUT	4
004	30.08022.00	SHAFT	1
005	603.05015.86	SCREW DIN933	1
006	15.00836.00	PIN DIN11024 R4	1
007	30.08010.00	BALLAST WEIGHT 3600 KG	1
008	10.11017.00	RED REFLECTOR	2
009	701.12000.66	NUT DIN934 M12x1.75	2
010	603.12050.86	SCREW DIN933	2
011	617.30220.86	BOLT DIN 960 M30x2x220	1
012	20.08030.00	WASHER	1
013	604.20160.86	SCREW DIN931 M20x160	2
014	15.00834.00	CHAIN	1

OPEN CABIN

OPENED CAB (PART 1)

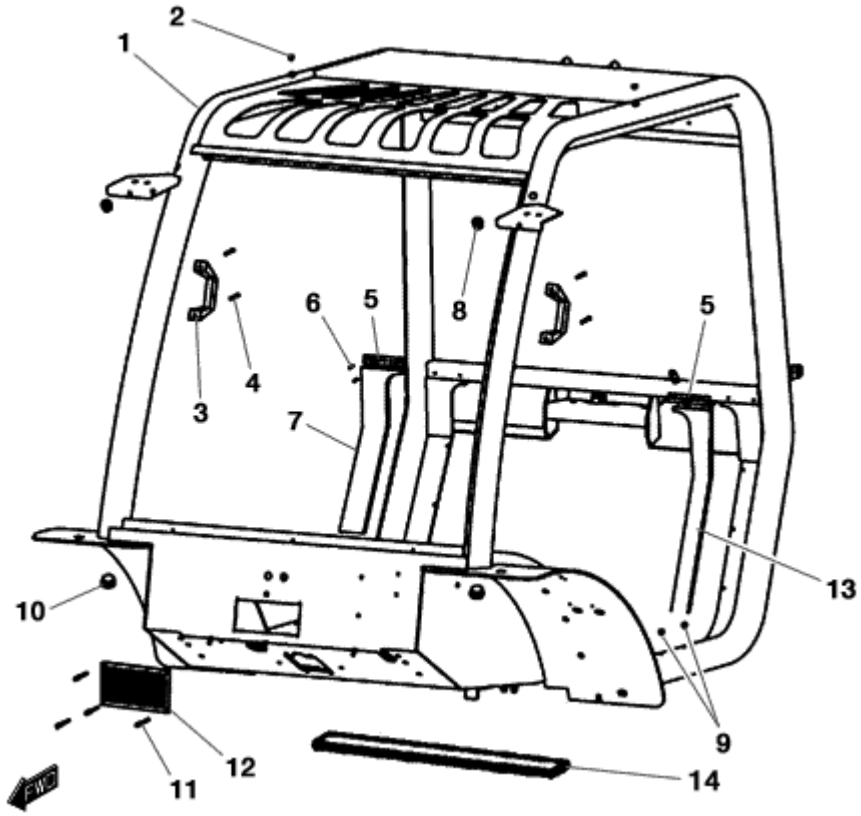

FIGURE	REFERENCE	DENOMINATION	AMOUNT
001	57.08001.00	DRIVER PROTECTION	1
002	MA.20047.00	PLASTIC CAP	2
003	MA.10007.00	KNOB	2
004	624.06018.66	SCREW	4
005	MA.20081.00	REAR TRIMMING FIXATION SUPPORT	2
006	MA.20019.00	SCREW DIN7984	4
007	MA.20071.00	RIGHT BACK TAPESTRY	1
008	MA.10025.00	CABLE GROMMET	3
009	MA.20048.00	PLASTIC CAP	8
010	MA.20046.00	CAP	2
011	502.03012.60	RIVET.	4
012	MA.20012.00	STRAINER	1
013	MA.20072.00	LEFT BACK TAPESTRY	1
014	MA.20013.00	LOWER REAR GASKET	1

OPEN CABIN

OPENED CAB (PART 2)

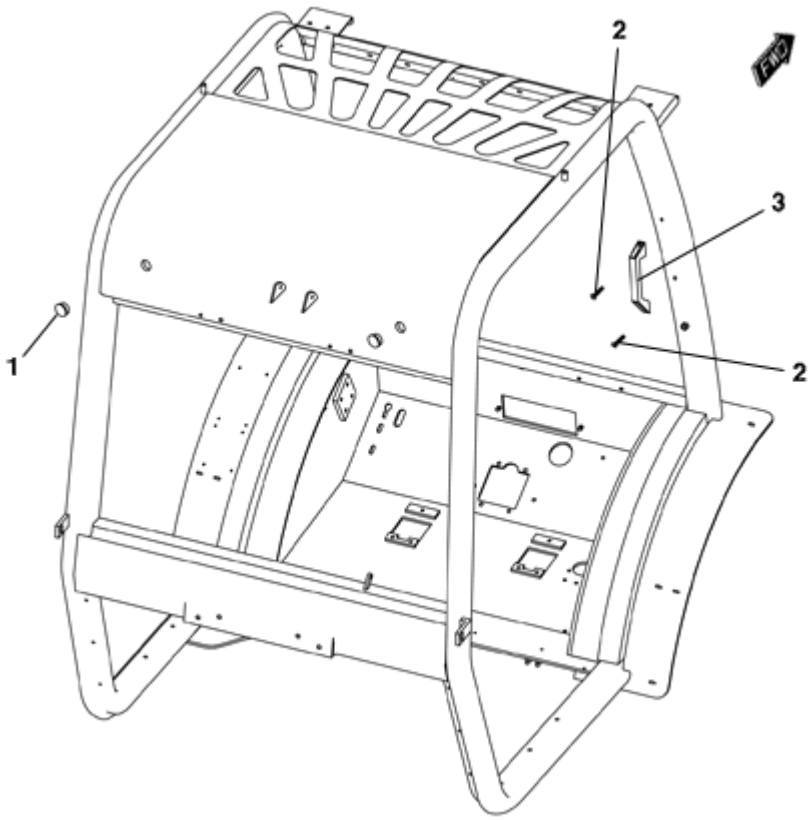

FIGURE	REFERENCE	DENOMINATION	AMOUNT
001	MA.20049.00	CAP	2
002	624.06018.66	SCREW	4
003	MA.10007.00	KNOB	2

OPEN CABIN
OPENED CAB (PART 3)

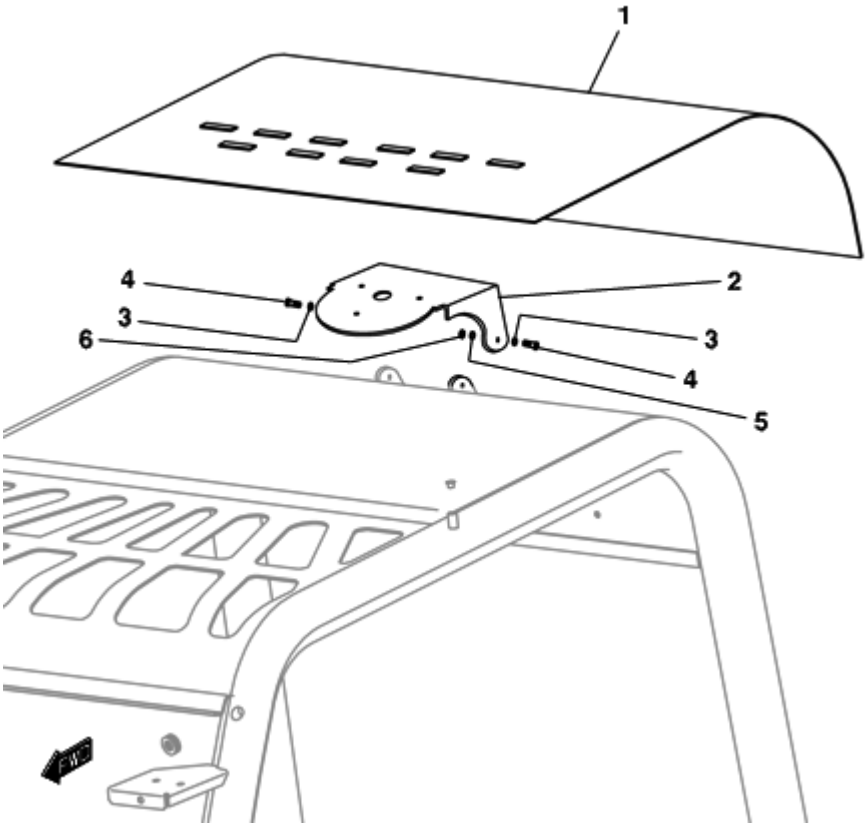

FIGURE	REFERENCE	DENOMINATION	AMOUNT
002	70.08106.00	SUPPORT 170x150x2	1
003	112.08000.66	WASHER DIN9021 D8	4
004	603.08025.86	SCREW DIN933 M8x25	2
005	116.08000.00	WASHER DIN125 A D8	2
006	720.08000.66	NUT DIN985 M8 AUTOLOCKING	2

OPEN CABIN
REAR VIEW MIRRORS

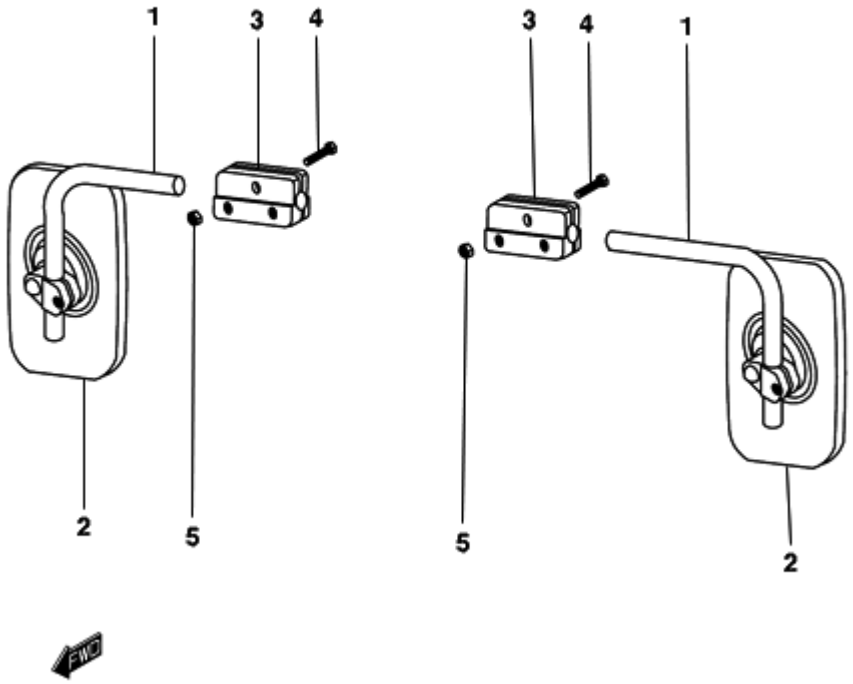

FIGURE	REFERENCE	DENOMINATION	AMOUNT
001	MA.10022.00	FIXING SUPPORT	2
002	MA.10021.00	DRIVING MIRROR	2
003	MA.20045.00	MIRROR FIXING FLANGE	2
004	603.08035.86	SCREW DIN933	2
005	701.08000.66	NUT DIN934 M8X1,25	2

08. BODYWORK
CARPET

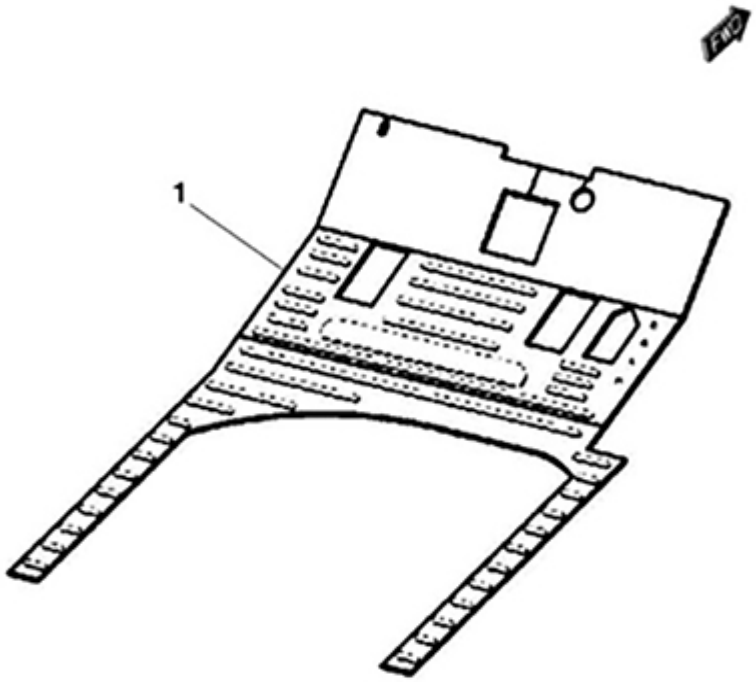

FIGURE	REFERENCE	DENOMINATION	AMOUNT
001	57.08019.00	CARPET	1
002	MA.20074.00	LEFT CARPET FILLING	1
003	MA.20073.00	RIGHT CARPET FILLING	1

CABIN

OPEN COCKPIT - SEMICLOSED COCKPIT

FIGURE	REFERENCE	DENOMINATION	AMOUNT
001	57.08007.00	OPENED CAB TO HALF-CLOSED CAB KIT	1
002	57.12010.00	PLATE AD. INDI	1
003	12.11014.00	SWITCH	1
004	12.11009.00	WINDSCREEN WIPER ELECTRICAL LENGTH	1
005	711.06000.66	NUT DIN982 M6	2
006	101.06000.66	WASHER DIN125 D6	2
007	603.06020.86	SCREW DIN933 M6x20	2
008	46.08621.00	SCREEN WIPER PUMP TANK	1

CLOSED CABIN

SEMICLOSE COCKPIT - CLOSE COCKPIT

FIGURE	REFERENCE	DENOMINATION	AMOUNT
001	12.08008.00	HALF-CLOSED CAB TO CLOSED CAB KIT	1
003	30.08040.00	GAS SPRING 40X462 2800N	2
004	57.08009.00	COVER SOP. TABLIER 108X163X986	1
005	101.05000.66	WASHER DIN125 D5	2
006	630.05020.96	SCREW ISO7380	2
007	46.00369.00	BALL VALVE D11	1
008	634.03010.82	SCREW DIN7982*	6
009	46.00368.00	AIR DIFFUSER	2
010	912.40060.66	CLAMP D40-60	4
011	480.00045.00	PVC PIPE 45X49	1
012	806.06030.00	FASTON MALE 6.3MM	3
013	10.14003.00	FASTON CONNECTOR 3 WAYS FEMALE	1
014	623.55016.86	SCREW DIN7971	2
015	46.00370.00	HEATER	1
016	912.20032.00	CLAMP	4
017	464.05025.28	CARDBOARD TUBE B/P 16x25	8
018	12.11020.00	SWITCH	1
019	08.00317.00	METALLIC GASKET BUNA D3/8	1

CLOSED CABIN

SEMICLOSE COCKPIT - CLOSE COCKPIT

FIGURE	REFERENCE	DENOMINATION	AMOUNT
020	08.00301.02	NIPPLE M/TB	1

DUPLEX MAST 3.7M (FEM IV)

MAST GUIDES

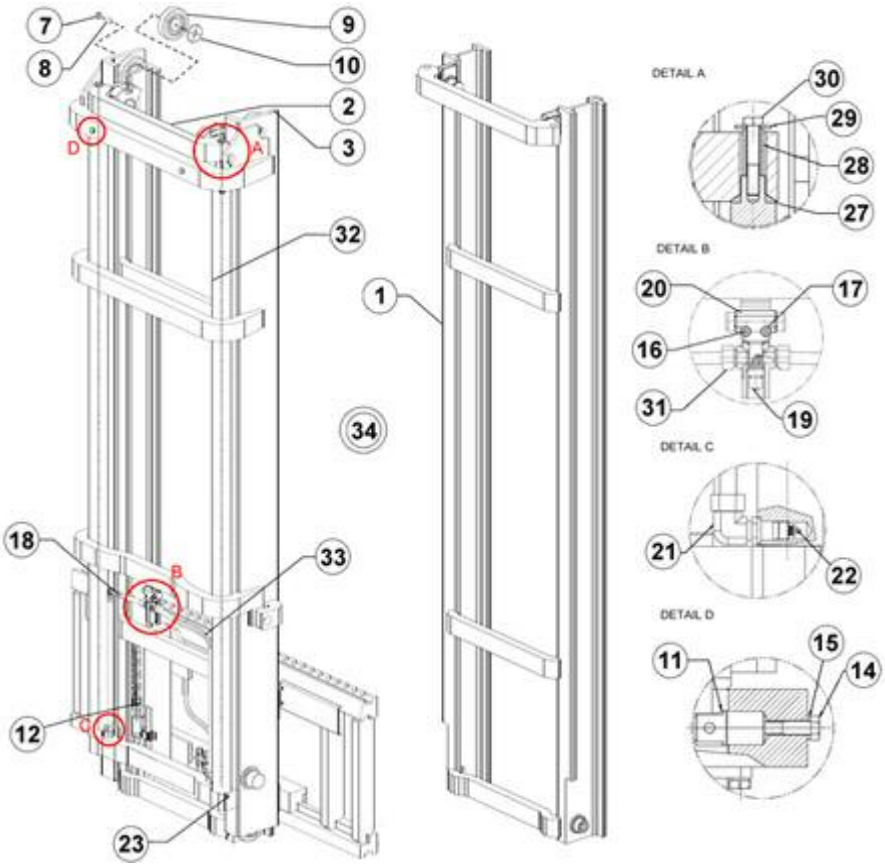

FIGURE	REFERENCE	DENOMINATION	AMOUNT
001	EL.60083.00	INNER MAST	1
002	EL.50035.00	SCREW TE M12X20 UNI 5739 8.8	2
003	EL.50033.00	FLAT WASHER D12 UNI6592	2
004	EL.60031.00	HOSE PROTECTION	2
005	EL.60108.00	SEEGER WASHER	2
006	EL.30091.00	PULLEY	2
007	EL.60121.00	NUT	8
008	EL.60140.00	SCREW	8
009	EL.60005.00	BEARING	8
010	EL.60006.00	COVER BUSHING	8
011	EL.60003.00	CHAIN ANCHOR PIN	2
012	EL.60135.00	CHAIN PIN	4
013	EL.60081.00	OUTER MAST	1
016	EL.60111.00	SCREW	2
017	EL.60102.00	WASHER	2
019	EL.60147.00	SB33 VALVE S=19	1
020	EL.60012.00	TWO WAY COLLECTOR	1
021	EL.60142.00	FIXING SUPPORT	2

DUPLEX MAST 3.7M (FEM IV)
MAST GUIDES

FIGURE	REFERENCE	DENOMINATION	AMOUNT
022	EL.60114.00	LB3 VALVE S=2,3	1
023	EL.60141.00	SCREW	2
024	EL.60110.00	SCREW	4
025	EL.60107.00	WASHER	4
026	EL.60032.00	CYLINDER LOCK	2
027	EL.50037.00	CONVEX WASHER D25 DIN6319C	2
028	EL.60027.00	SPACER	2
029	EL.60139.00	WASHER	2
030	EL.50036.00	SCREW M12X70	2
031	EL.60143.00	NUT	2
034	30.09150.00	FULL DUPLEX MAST 3,7 M FEM IV	1

DUPLEX MAST 3.7M (FEM IV)
CARRIAGE SUBJECTION

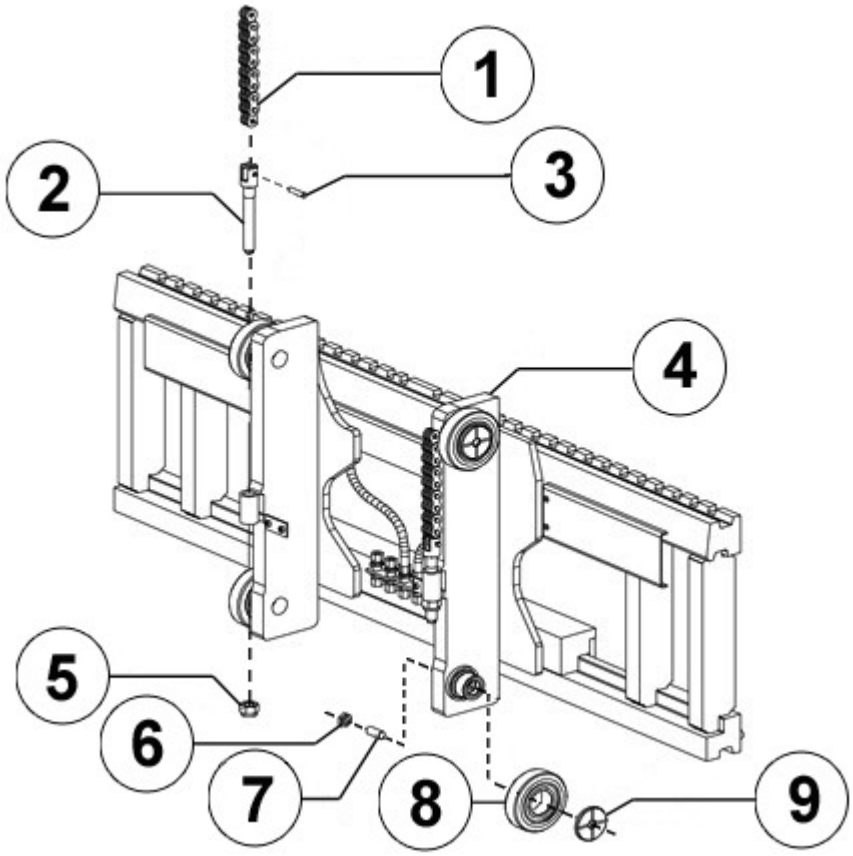

FIGURE	REFERENCE	DENOMINATION	AMOUNT
001	EL.60131.00	CARRIAGE CHAIN (2250 MM.)	2
002	EL.60001.00	CHAIN ANCHOR	2
003	EL.60135.00	CHAIN PIN	4
004	EL.60056.00	FORK CARRIAGE 1660MM	1
005	EL.50065.00	NUT	2
006	EL.60121.00	NUT	8
007	EL.60140.00	SCREW	8
008	EL.60005.00	BEARING	8
009	EL.60006.00	COVER BUSHING	8

DUPLEX MAST 3.7M (FEM IV)
AUXILIARY REEVING

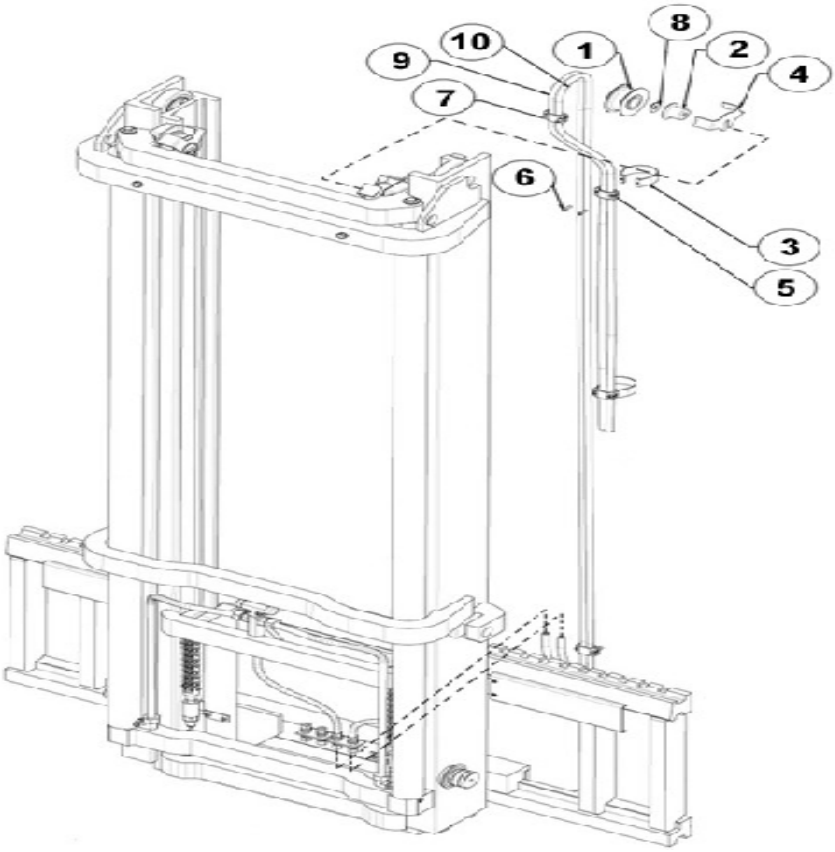

FIGURE	REFERENCE	DENOMINATION	AMOUNT
001	EL.60014.00	PULLEY	1
002	EL.60015.00	PULLEY PIN	1
003	EL.60042.00	HOSE PROTECTION	2
004	EL.40120.00	BRACKET ANTI-DERAILMENT	1
005	EL.60046.00	CLAMPS	4
006	EL.60109.00	SCREW	4
007	EL.60118.00	SCREW	4
008	EL.60139.00	WASHER	1
009	EL.60062.00	HOSE 3/8	1
010	EL.60062.00	HOSE 3/8	1

DUPLEX MAST 3.7M (FEM IV)
CARRIAGE

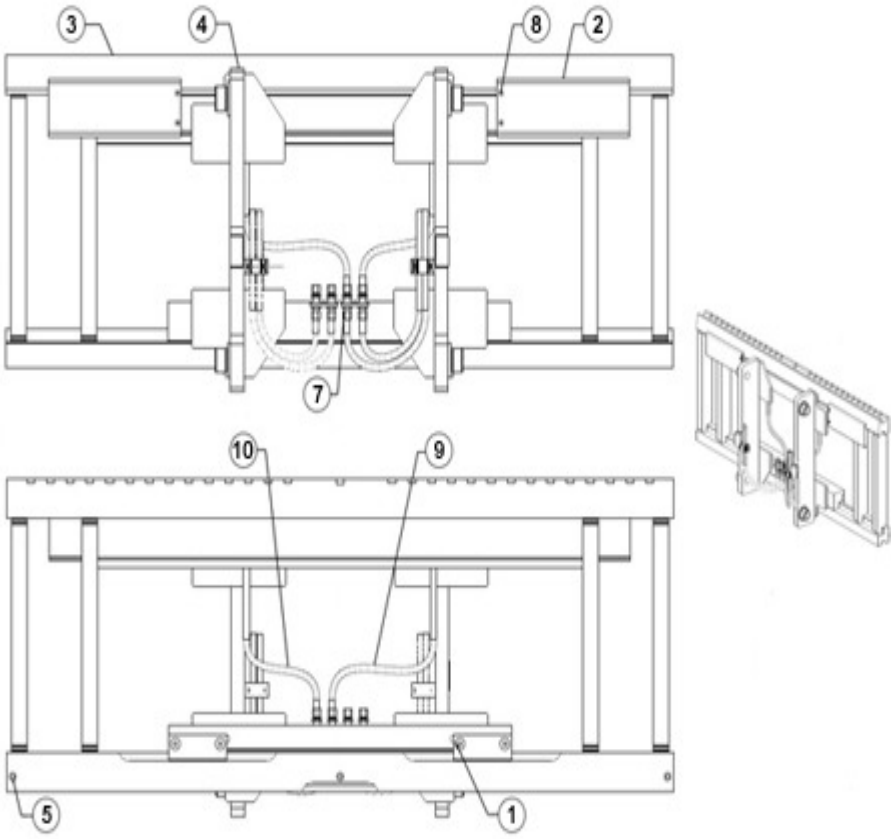

FIGURE	REFERENCE	DENOMINATION	AMOUNT
001	EL.60097.00	NSS - KIT S. S. ASSEMBLY	1
002	EL.60051.00	SIDE SHIFTER	1
003	EL.60054.00	HOSE PROTECTION	2
004	EL.60055.00	MOBILE CARRIAGE	1
005	EL.60103.00	SCREW	3
006	EL.60115.00	FIXING SUPPORT	2
007	EL.60122.00	FIXING SUPPORT	2
008	EL.60123.00	NUT	4
009	EL.60086.00	HOSE 5/16"	1
010	EL.60085.00	HOSE 5/16	1

DUPLEX MAST 3.7M (FEM IV)
LATERAL DISPLACEMENT

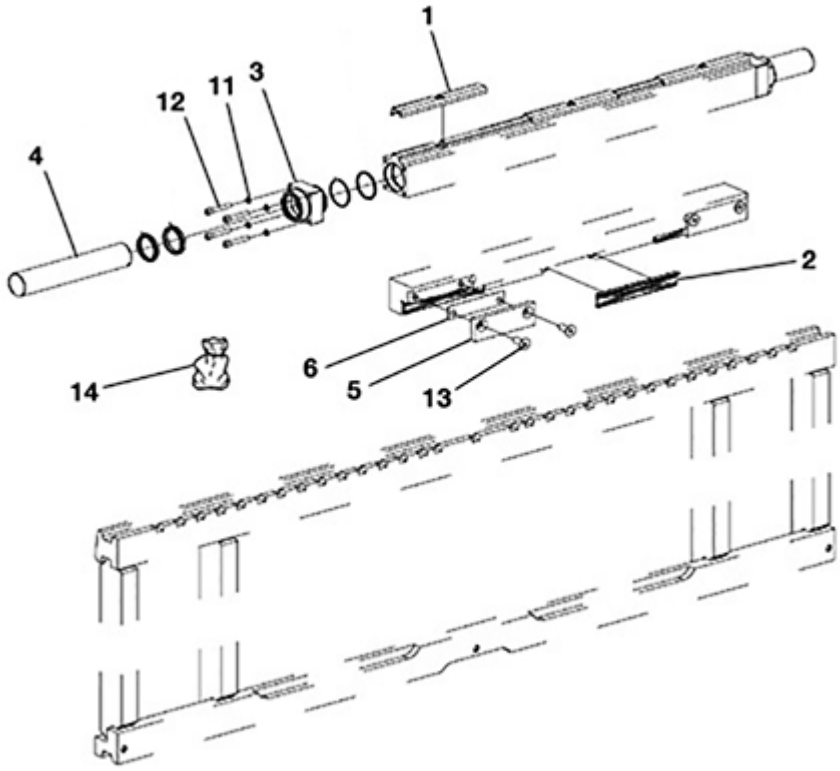

FIGURE	REFERENCE	DENOMINATION	AMOUNT
001	EL.60007.00	BUSH	3
002	EL.60008.00	BUSH	3
003	EL.60010.00	PLUG	2
004	EL.60011.00	ROD	2
005	EL.60044.00	PLATE	2
006	EL.60045.00	SHIM	2
011	EL.50049.00	WASHER	8
012	EL.60120.00	SCREW	8
013	EL.60146.00	SCREW	4
014	EL.60145.00	SEAL KIT	2

DUPLEX MAST 3.7M (FEM IV)
LATERAL CYLINDER

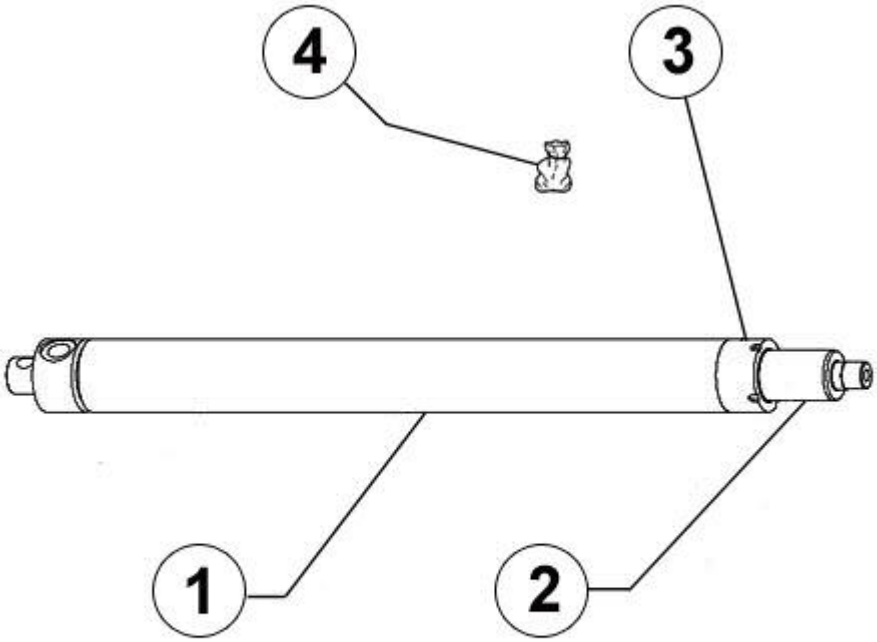

FIGURE	REFERENCE	DENOMINATION	AMOUNT
001	EL.60022.00	PLUG	2
002	EL.60026.00	ROD ASSY	2
003	EL.60021.00	SHELL PLUG	2
004	EL.50094.00	FREE LIFT CYLINDER SEALS KIT	2

DUPLEX MAST 4.5M (FEM IV)

MAST GUIDES

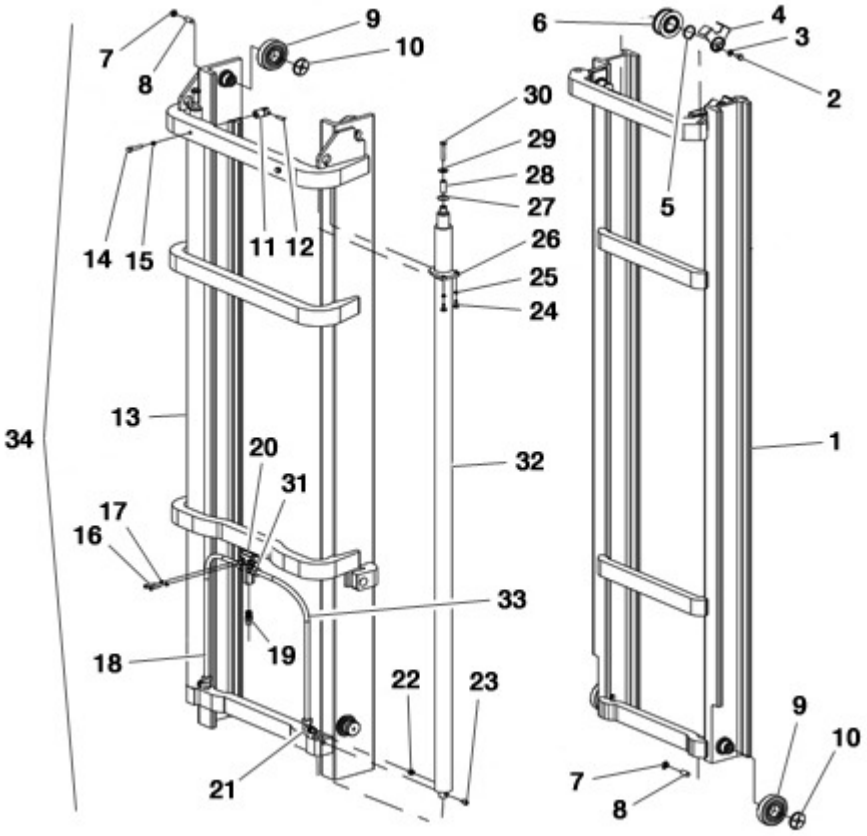

FIGURE	REFERENCE	DENOMINATION	AMOUNT
001	EL.60084.00	INNER MAST	1
002	EL.50035.00	SCREW TE M12X20 UNI 5739 8.8	2
003	EL.50033.00	FLAT WASHER D12 UNI6592	2
004	EL.60031.00	HOSE PROTECTION	2
005	EL.60108.00	SEEGER WASHER	2
006	EL.30091.00	PULLEY	2
007	EL.60121.00	NUT	8
008	EL.60140.00	SCREW	8
009	EL.60005.00	BEARING	8
010	EL.60006.00	COVER BUSHING	8
011	EL.60003.00	CHAIN ANCHOR PIN	2
012	EL.60135.00	CHAIN PIN	4
013	EL.60082.00	OUTER MAST	1
015	EL.60104.00	WASHER	2
016	EL.60111.00	SCREW	2
017	EL.60102.00	WASHER	2
019	EL.60147.00	SB33 VALVE S=19	1
020	EL.60012.00	TWO WAY COLLECTOR	1

DUPLEX MAST 4.5M (FEM IV)
MAST GUIDES

FIGURE	REFERENCE	DENOMINATION	AMOUNT
021	EL.60142.00	FIXING SUPPORT	2
022	EL.60114.00	LB3 VALVE S=2,3	1
023	EL.60141.00	SCREW	2
024	EL.60110.00	SCREW	4
025	EL.60107.00	WASHER	4
026	EL.60032.00	CYLINDER LOCK	3
027	EL.50037.00	CONVEX WASHER D25 DIN6319C	2
028	EL.60027.00	SPACER	2
029	EL.60139.00	WASHER	2
030	EL.50036.00	SCREW M12X70	2
031	EL.60143.00	NUT	2
032	EL.60091.00	MAST CYLINDER	2
034	30.09250.00	FULL DUPLEX MAST 4,5 M FEM IV	1

DUPLEX MAST 4.5M (FEM IV)
CARRIAGE SUBJECTION

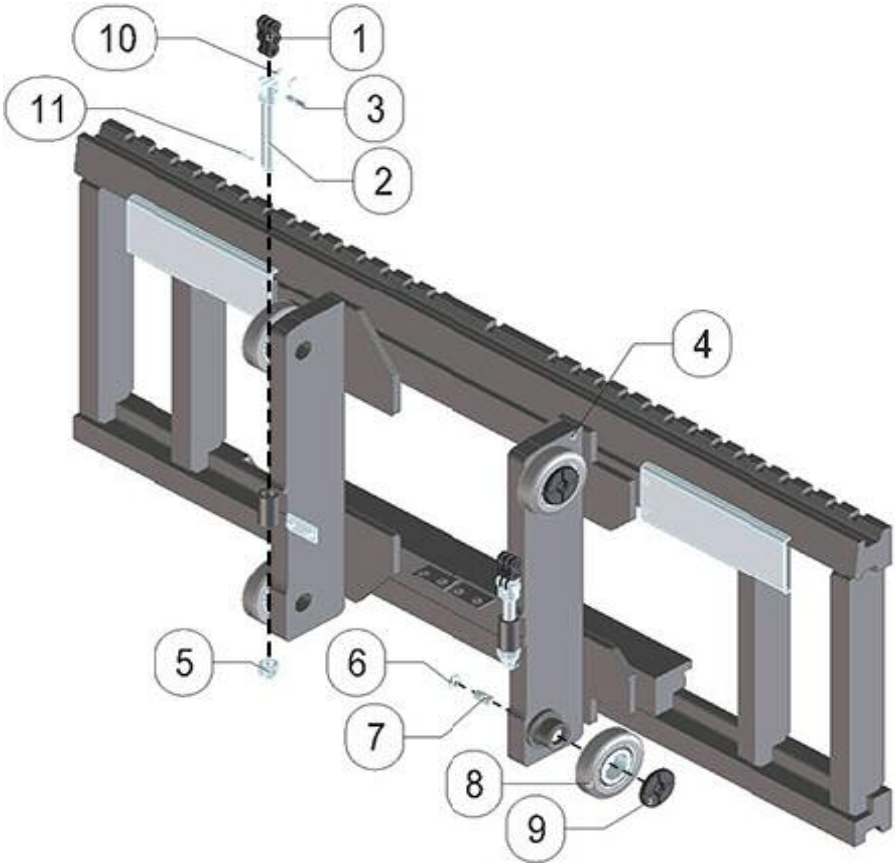

FIGURE	REFERENCE	DENOMINATION	AMOUNT
001	EL.60133.00	CARRIAGE CHAIN (2680 MM.)	2
002	EL.60001.00	CHAIN ANCHOR	2
003	EL.60135.00	CHAIN PIN	4
004	EL.60056.00	FORK CARRIAGE 1660MM	1
005	EL.50065.00	NUT	2
006	EL.60121.00	NUT	8
007	EL.60140.00	SCREW	8
008	EL.60005.00	BEARING	8
009	EL.60006.00	COVER BUSHING	8

DUPLEX MAST 4.5M (FEM IV)
AUXILIARY REEVING

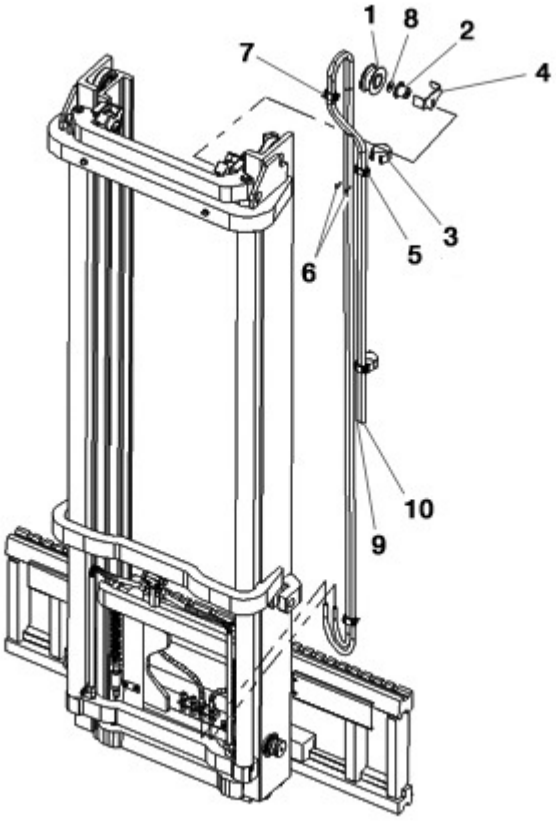

FIGURE	REFERENCE	DENOMINATION	AMOUNT
001	EL.60014.00	PULLEY	1
002	EL.60015.00	PULLEY PIN	1
003	EL.40120.00	BRACKET ANTI-DERAILMENT	2
004	EL.60042.00	HOSE PROTECTION	1
005	EL.60046.00	CLAMPS	4
006	EL.60109.00	SCREW	4
007	EL.60118.00	SCREW	4
008	EL.60139.00	WASHER	1
009	EL.60063.00	HOSE 3/8	1
010	EL.60063.00	HOSE 3/8	1

DUPLEX MAST 4.5M (FEM IV)
CARRIAGE

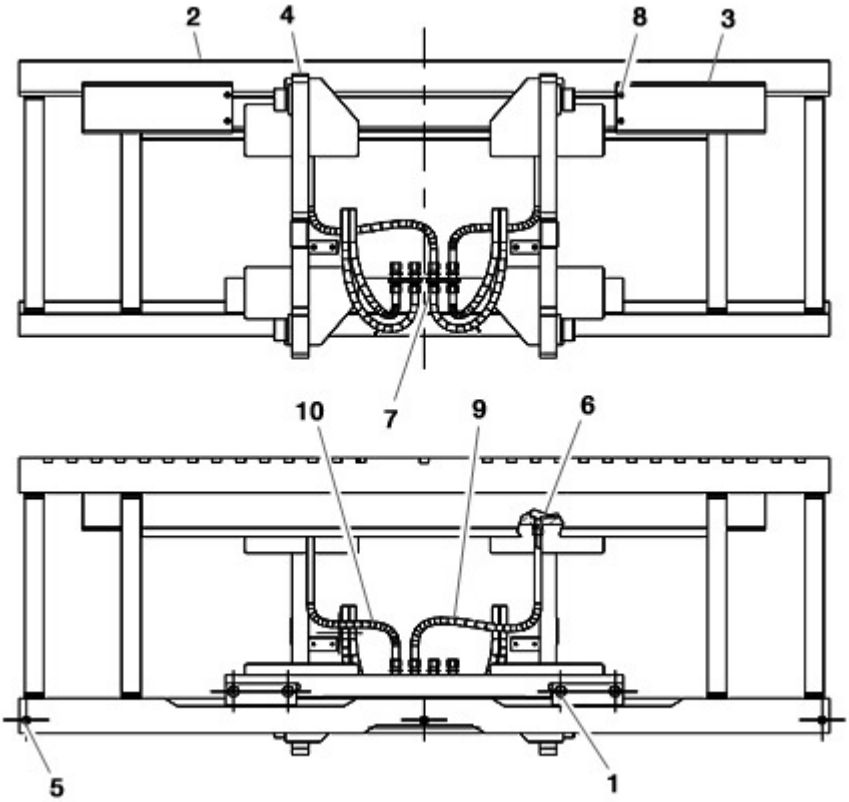

FIGURE	REFERENCE	DENOMINATION	AMOUNT
001	EL.60097.00	NSS - KIT S. S. ASSEMBLY	1
002	EL.60051.00	SIDE SHIFTER	1
003	EL.60054.00	HOSE PROTECTION	2
004	EL.60055.00	MOBILE CARRIAGE	1
005	EL.60103.00	SCREW	3
006	EL.60115.00	FIXING SUPPORT	2
007	EL.60122.00	FIXING SUPPORT	2
008	EL.60123.00	NUT	4
009	EL.60086.00	HOSE 5/16"	1
010	EL.60085.00	HOSE 5/16	1

DUPLEX MAST 4.5M (FEM IV)
LATERAL DISPLACEMENT

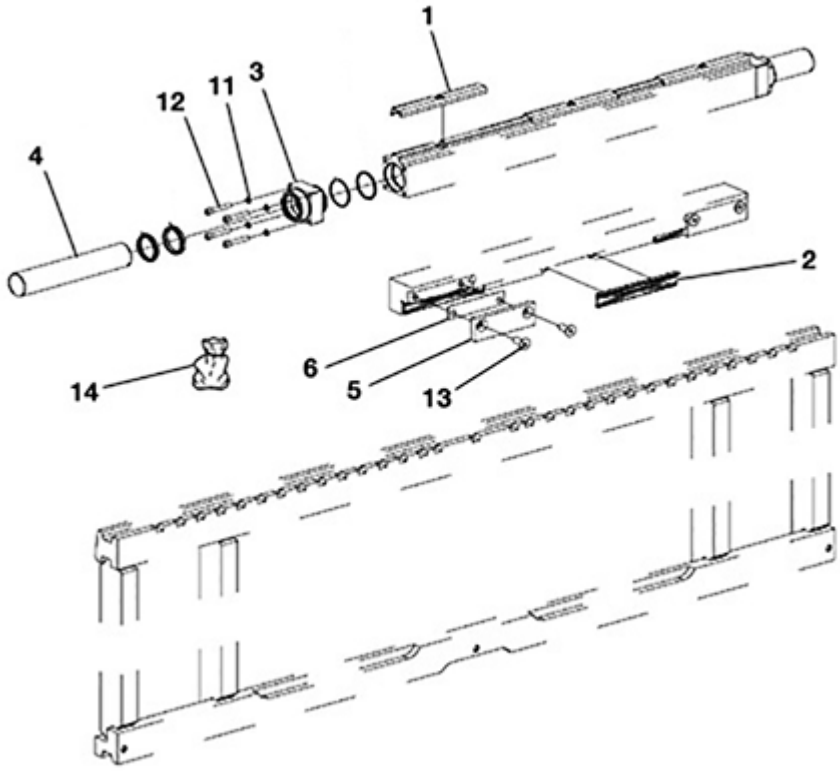

FIGURE	REFERENCE	DENOMINATION	AMOUNT
001	EL.60007.00	BUSH	3
002	EL.60008.00	BUSH	3
003	EL.60010.00	PLUG	2
004	EL.60011.00	ROD	2
005	EL.60044.00	PLATE	2
006	EL.60045.00	SHIM	2
011	EL.50049.00	WASHER	8
012	EL.60120.00	SCREW	8
013	EL.60146.00	SCREW	4
014	EL.60145.00	SEAL KIT	1

DUPLEX MAST 4.5M (FEM IV)
LATERAL CYLINDER

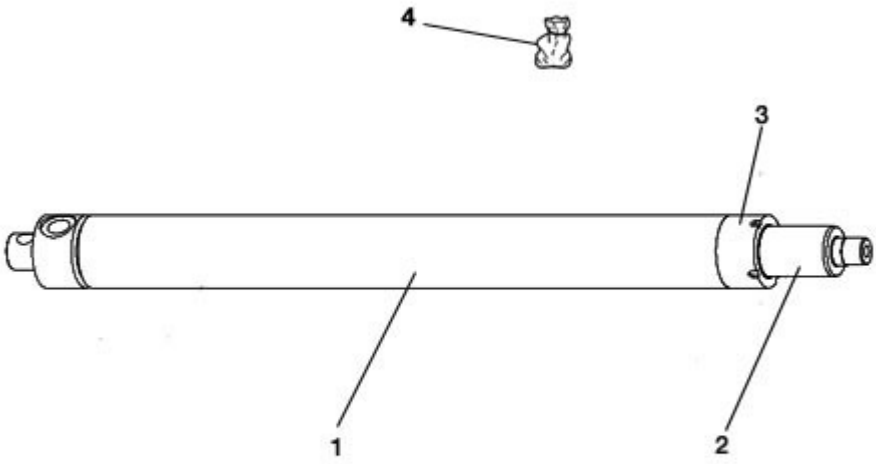

FIGURE	REFERENCE	DENOMINATION	AMOUNT
001	EL.60022.00	PLUG	2
002	EL.60026.00	ROD ASSY	2
003	EL.60021.00	SHELL PLUG	2
004	EL.50094.00	FREE LIFT CYLINDER SEALS KIT	2

TRIPLEX MAST 4.25M (FEM IV)

MAST GUIDES

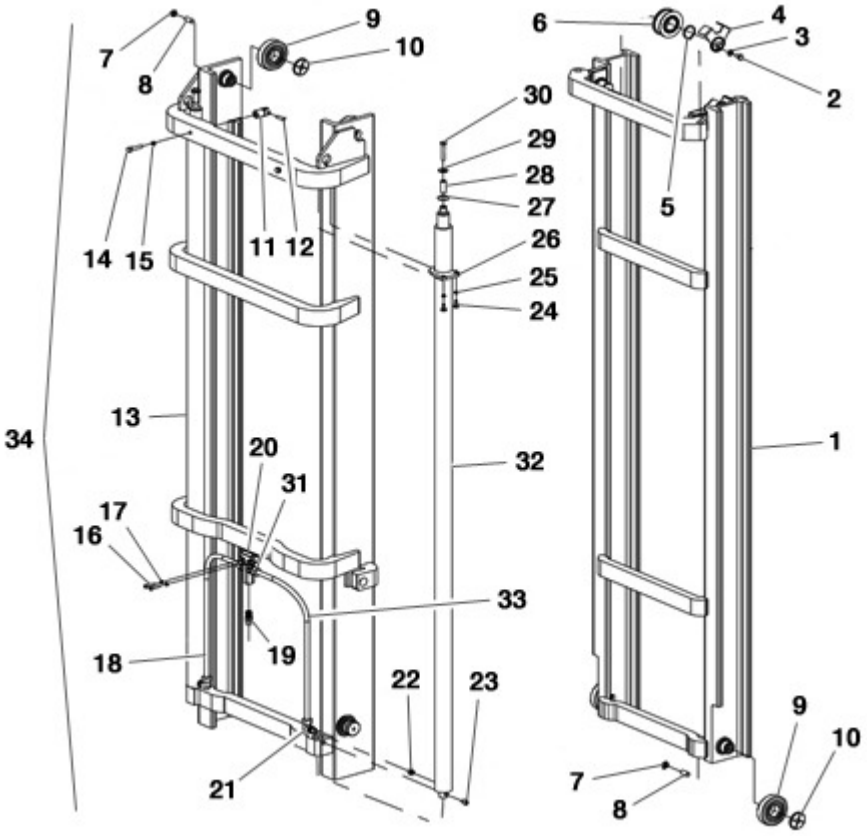

FIGURE	REFERENCE	DENOMINATION	AMOUNT
001	EL.50037.00	CONVEX WASHER D25 DIN6319C	2
002	EL.60001.00	CHAIN ANCHOR	4
003	EL.30091.00	PULLEY	2
004	EL.60003.00	CHAIN ANCHOR PIN	2
005	EL.60004.00	HOSE PROTECTION	4
006	EL.60005.00	BEARING	12
007	EL.60006.00	COVER BUSHING	12
008	EL.60013.00	4 WAY COLLECTOR	1
009	EL.60029.00	CHAIN ANCHOR	2
010	EL.50061.00	INTEGRAL SUPPORT	2
011	EL.60017.00	CLAMP	4
012	EL.60018.00	CLAMP	1
013	EL.60019.00	CLAMP	1
014	EL.60088.00	MAST CYLINDER	2
015	EL.60027.00	SPACER	2
016	EL.60064.00	FREE LIFT CYLINDER	2
016	EL.60032.00	CYLINDER LOCK	2
017	EL.60036.00	FREE LIFT CYLINDER LOCK	2

TRIPLEX MAST 4.25M (FEM IV)
MAST GUIDES

FIGURE	REFERENCE	DENOMINATION	AMOUNT
019	EL.60037.00	CHAIN ANCHOR PIN	2
020	EL.60040.00	SPACER	4
021	EL.60041.00	SUPPORT ASSEMBLY	2
022	EL.60072.00	OUTER MAST	1
023	EL.60075.00	INTERMEDIATE MAST	1
024	EL.60078.00	INNER MAST	1
025	EL.60148.00	HOSE	1
026	EL.60102.00	WASHER	6
027	EL.50065.00	NUT	4
028	EL.50030.00	WASHER D10	2
029	EL.50031.00	SCREW	4
030	EL.60105.00	SCREW	4
031	EL.50032.00	SCREW	2
032	EL.50033.00	FLAT WASHER D12 UNI6592	2
033	EL.60106.00	WASHER	8
034	EL.60107.00	WASHER	4
035	EL.60108.00	SEEGER WASHER	2
036	EL.60111.00	SCREW	2
037	EL.60113.00	SB35 VALVE S=21,5	1
038	EL.60114.00	LB3 VALVE S=2,3	4
039	EL.50036.00	SCREW M12X70	2
040	EL.60117.00	SCREW	8
041	EL.60121.00	NUT	12
042	EL.60124.00	NUT	4
043	EL.60129.00	MAST CHAIN (1700 MM.)	2
044	EL.60135.00	CHAIN PIN	8
045	EL.60139.00	WASHER	2
046	EL.60140.00	SCREW	12
047	EL.60141.00	SCREW	2
048	EL.60142.00	FIXING SUPPORT	4
049	EL.60143.00	NUT	4
051	EL.60047.00	HOSE	1
052	EL.60069.00	HOSE 1/2	1
053	EL.60069.00	HOSE 1/2	1
054	30.09350.00	FULL MAST TRIPLEX 4,25 M FEM IV	1

TRIPLEX MAST 4.25M (FEM IV)
CARRIAGE SUBJECTION

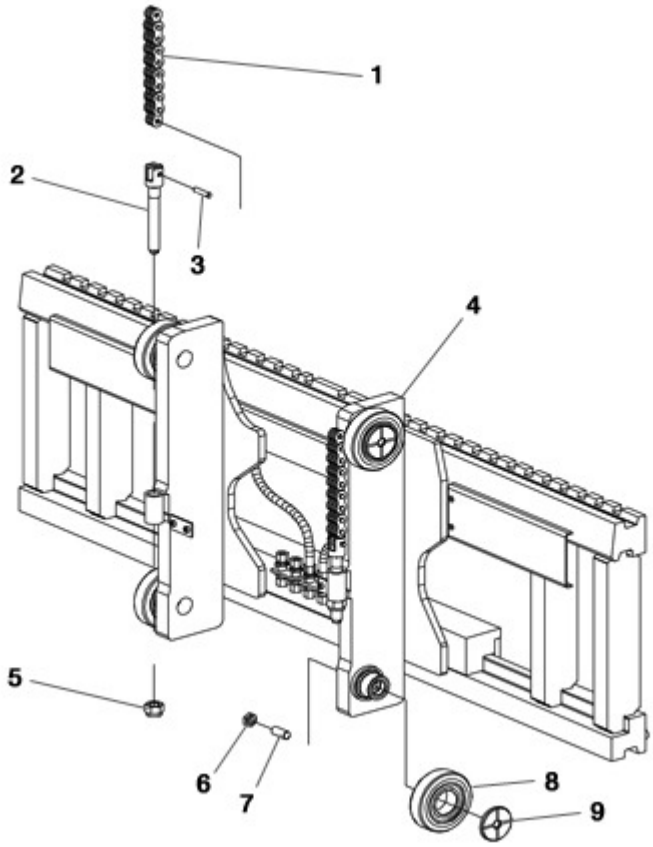

FIGURE	REFERENCE	DENOMINATION	AMOUNT
001	EL.60125.00	CARRIAGE CHAIN (1090 MM.)	2
002	EL.60001.00	CHAIN ANCHOR	4
003	EL.60135.00	CHAIN PIN	8
004	EL.60053.00	CARRIAGE	1
005	EL.50065.00	NUT	4
006	EL.60121.00	NUT	12
007	EL.60140.00	SCREW	12
008	EL.60005.00	BEARING	12
009	EL.60006.00	COVER BUSHING	12

TRIPLEX MAST 4.25M (FEM IV)
AUXILIARY REEVING

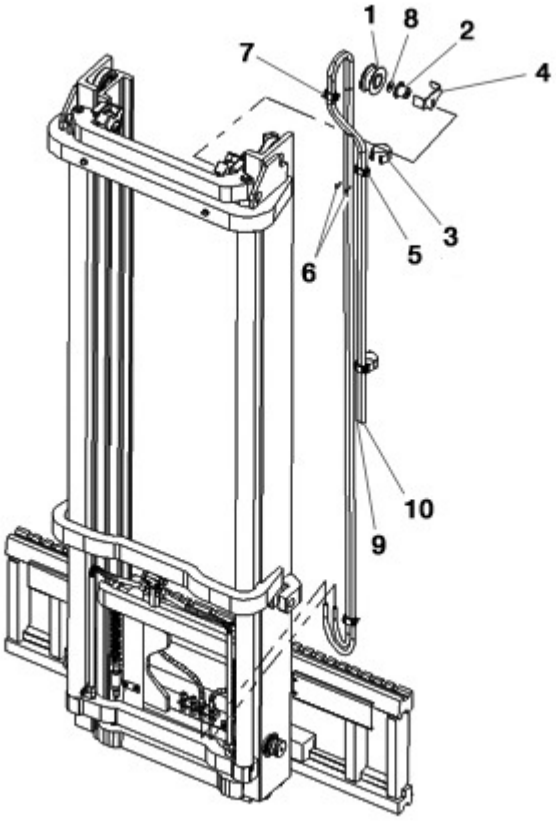

FIGURE	REFERENCE	DENOMINATION	AMOUNT
001	EL.40053.00	HOSE PULLEY	1
002	EL.40057.00	PULLEY SUPPORT	1
003	EL.40120.00	BRACKET ANTI-DERAILMENT	1
004	EL.60042.00	HOSE PROTECTION	2
005	EL.60043.00	HOSE PROTECTION	2
006	EL.60046.00	CLAMPS	4
007	EL.60050.00	CLAMP	2
011	EL.50071.00	WASHER	4
012	EL.60117.00	SCREW	2
013	EL.60136.00	SCREW	4
014	EL.60137.00	SCREW M6x25 UNI 5931 8.8	10
016	EL.60138.00	FIXING SUPPORT	2
017	EL.40056.00	FLAT WASHER D12 UNI6593	1
018	EL.60030.00	HOSE 3/8	1
019	EL.60030.00	HOSE 3/8	1
020	EL.60030.00	HOSE 3/8	1
021	EL.60030.00	HOSE 3/8	1

TRIPLEX MAST 4.25M (FEM IV)
CARRIAGE

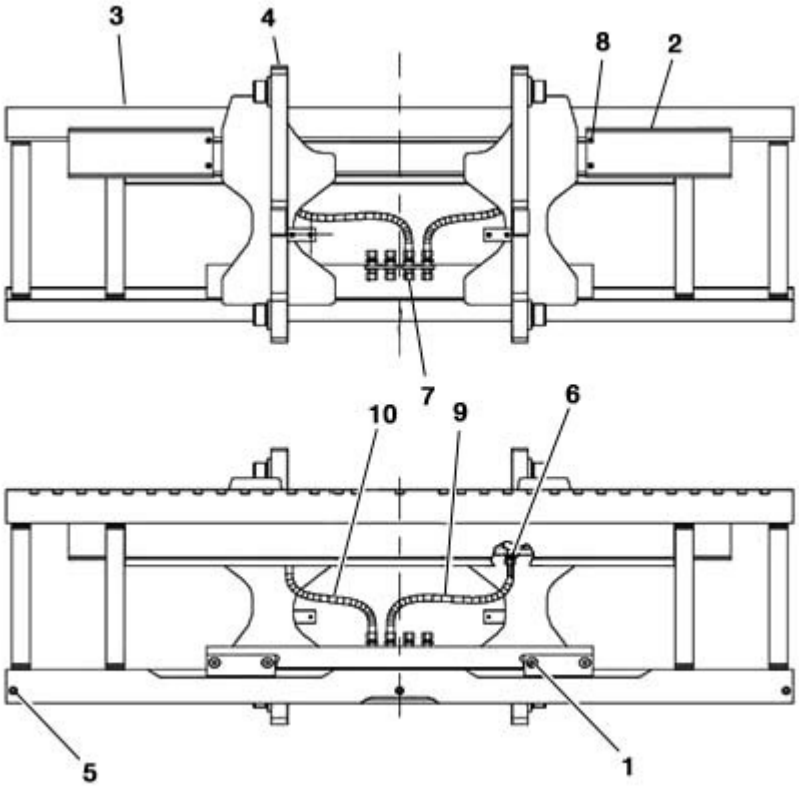

FIGURE	REFERENCE	DENOMINATION	AMOUNT
001	EL.60097.00	NSS - KIT S. S. ASSEMBLY	1
002	EL.60051.00	SIDE SHIFTER	1
003	EL.60052.00	MOBILE CARRIAGE	1
004	EL.60054.00	HOSE PROTECTION	2
005	EL.60103.00	SCREW	3
006	EL.60115.00	FIXING SUPPORT	2
007	EL.60122.00	FIXING SUPPORT	2
008	EL.60123.00	NUT	4
009	EL.60086.00	HOSE 5/16"	1
010	EL.60085.00	HOSE 5/16	1

TRIPLEX MAST 4.25M (FEM IV)
LATERAL DISPLACEMENT

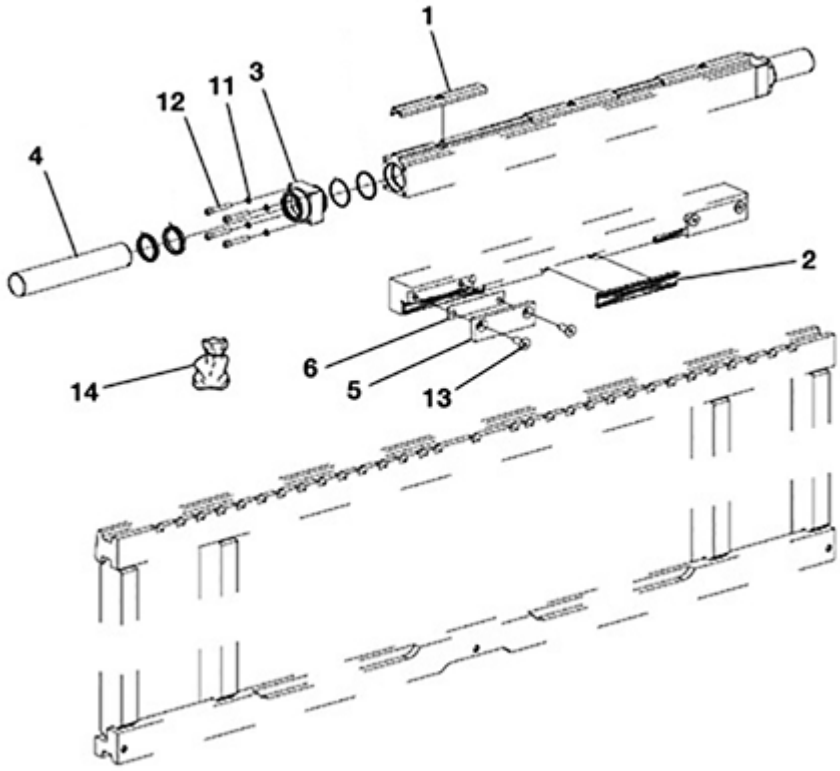

FIGURE	REFERENCE	DENOMINATION	AMOUNT
001	EL.60007.00	BUSH	3
002	EL.60008.00	BUSH	3
003	EL.60010.00	PLUG	2
004	EL.60011.00	ROD	2
005	EL.60044.00	PLATE	2
006	EL.60045.00	SHIM	2
011	EL.50049.00	WASHER	8
012	EL.60120.00	SCREW	8
013	EL.60146.00	SCREW	4
014	EL.60145.00	SEAL KIT	2

TRIPLEX MAST 4.25M (FEM IV)
LATERAL CYLINDER

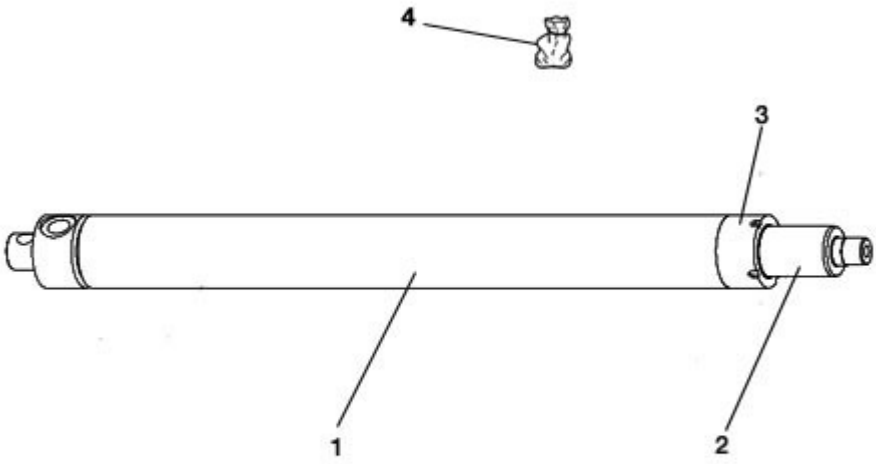

FIGURE	REFERENCE	DENOMINATION	AMOUNT
001	EL.60022.00	PLUG	2
002	EL.60026.00	ROD ASSY	2
003	EL.60021.00	SHELL PLUG	2
004	EL.50094.00	FREE LIFT CYLINDER SEALS KIT	2

TRIPLEX MAST 4.25M (FEM IV)
FREE LIFT CYLINDER

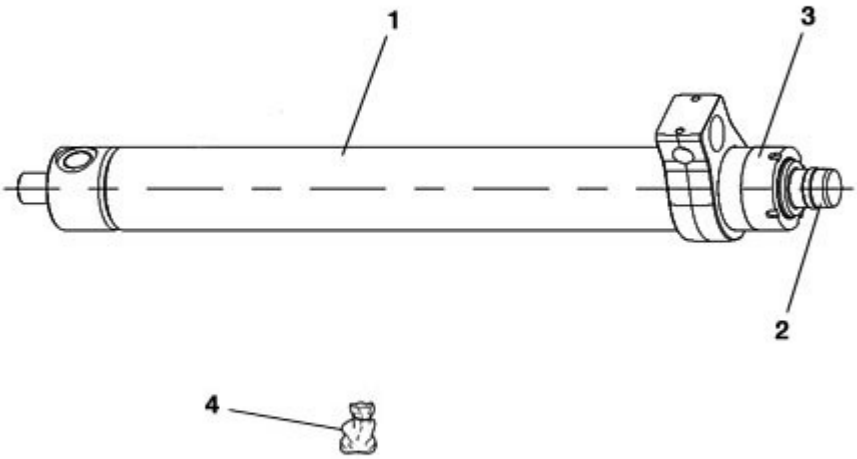

FIGURE	REFERENCE	DENOMINATION	AMOUNT
001	EL.60034.00	COVER	2
002	EL.60024.00	ROD ASSY	2
003	EL.60035.00	SHELL PLUG	2
004	EL.50094.00	FREE LIFT CYLINDER SEALS KIT	2

TRIPLEX MAST 6.8M (FEM IV)
MAST GUIDES

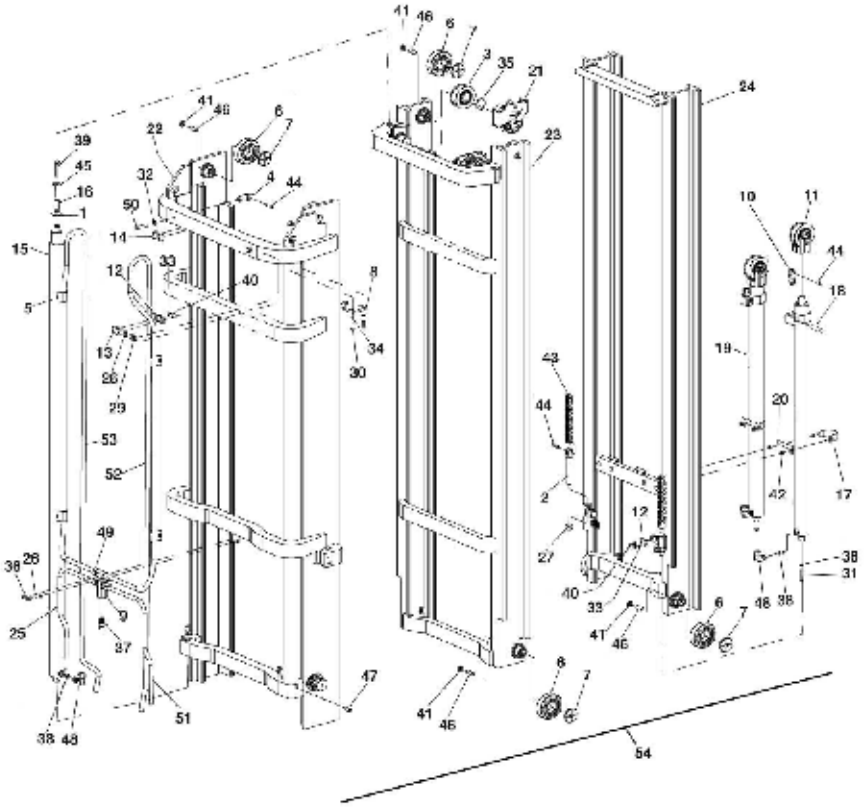

FIGURE	REFERENCE	DENOMINATION	AMOUNT
001	EL.50037.00	CONVEX WASHER D25 DIN6319C	2
002	EL.60001.00	CHAIN ANCHOR	4
003	EL.30091.00	PULLEY	2
004	EL.60003.00	CHAIN ANCHOR PIN	2
005	EL.60004.00	HOSE PROTECTION	4
006	EL.60005.00	BEARING	12
007	EL.60006.00	COVER BUSHING	12
008	EL.60013.00	4 WAY COLLECTOR	1
009	EL.60029.00	CHAIN ANCHOR	2
010	EL.50061.00	INTEGRAL SUPPORT	2
011	EL.60017.00	CLAMP	4
012	EL.60018.00	CLAMP	1
013	EL.60019.00	CLAMP	1
014	EL.60090.00	MAST CYLINDER	2
015	EL.60027.00	SPACER	2
016	EL.60032.00	CYLINDER LOCK	2
017	EL.60065.00	FREE LIFT CYLINDER	2
018	EL.60036.00	FREE LIFT CYLINDER LOCK	2

TRIPLEX MAST 6.8M (FEM IV)
MAST GUIDES

FIGURE	REFERENCE	DENOMINATION	AMOUNT
019	EL.60037.00	CHAIN ANCHOR PIN	2
020	EL.60040.00	SPACER	4
021	EL.60041.00	SUPPORT ASSEMBLY	2
022	EL.60073.00	OUTER MAST	1
023	EL.60076.00	INTERMEDIATE MAST	1
024	EL.60079.00	INNER MAST	1
025	EL.60148.00	HOSE	1
026	EL.60102.00	WASHER	6
027	EL.50065.00	NUT	4
028	EL.50030.00	WASHER D10	2
029	EL.50031.00	SCREW	4
030	EL.60105.00	SCREW	4
031	EL.50032.00	SCREW	2
032	EL.50033.00	FLAT WASHER D12 UNI6592	2
033	EL.60106.00	WASHER	8
034	EL.60107.00	WASHER	4
035	EL.60108.00	SEEGER WASHER	2
036	EL.60111.00	SCREW	2
037	EL.60113.00	SB35 VALVE S=21,5	1
038	EL.60114.00	LB3 VALVE S=2,3	4
039	EL.50036.00	SCREW M12X70	2
040	EL.60117.00	SCREW	8
041	EL.60121.00	NUT	12
042	EL.60124.00	NUT	4
043	EL.60132.00	MAST CHAIN (2565 MM.)	2
044	EL.60135.00	CHAIN PIN	8
045	EL.60139.00	WASHER	2
046	EL.60140.00	SCREW	12
047	EL.60141.00	SCREW	2
048	EL.60142.00	FIXING SUPPORT	4
049	EL.60143.00	NUT	4
051	EL.60047.00	HOSE	1
052	EL.60070.00	HOSE 1/2	1
053	EL.60070.00	HOSE 1/2	1
054	30.09450.00	FULL MAST TRIPLEX 6,8 M. (FEM IV)	1

TRIPLEX MAST 6.8M (FEM IV)
CARRIAGE SUBJECTION

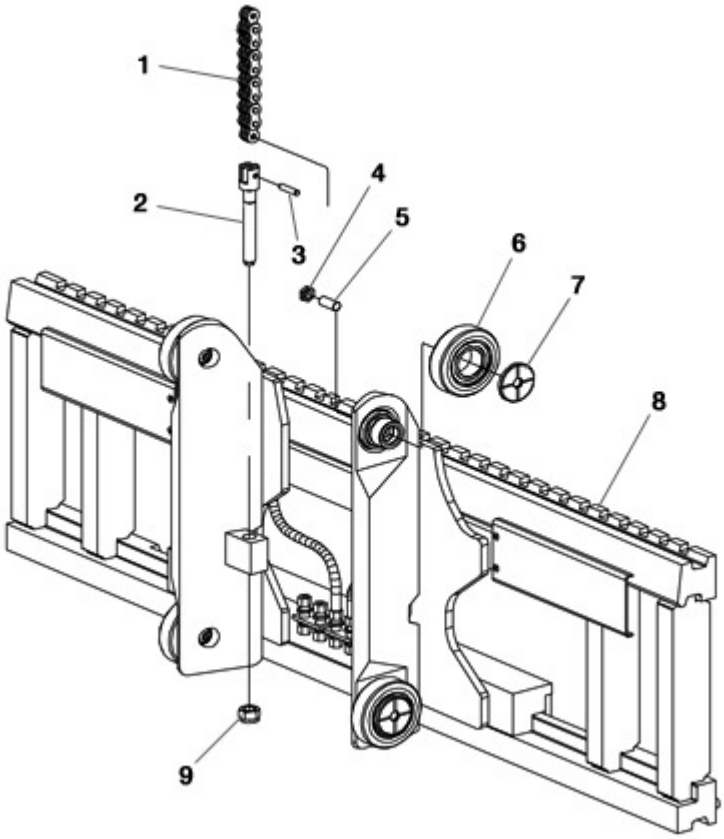

FIGURE	REFERENCE	DENOMINATION	AMOUNT
001	EL.60128.00	CARRIAGE CHAIN (1550 MM.)	2
002	EL.60001.00	CHAIN ANCHOR	4
003	EL.60135.00	CHAIN PIN	8
004	EL.60121.00	NUT	12
005	EL.60140.00	SCREW	12
006	EL.60005.00	BEARING	12
007	EL.60006.00	COVER BUSHING	12
008	EL.60053.00	CARRIAGE	1
009	EL.50065.00	NUT	4

TRIPLEX MAST 6.8M (FEM IV)
AUXILIARY REEVING

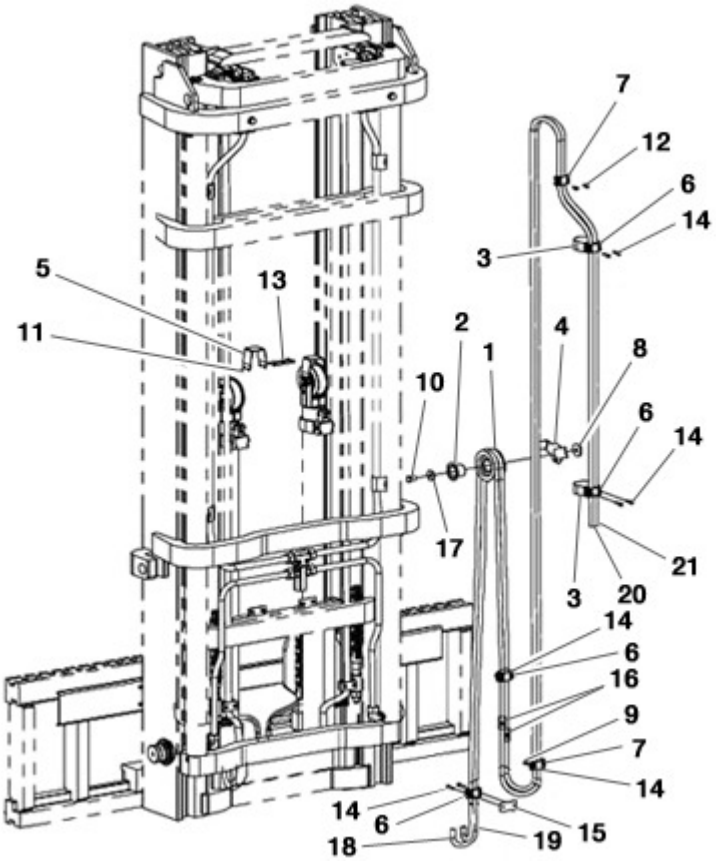

FIGURE	REFERENCE	DENOMINATION	AMOUNT
004	EL.60042.00	HOSE PROTECTION	2
005	EL.60043.00	HOSE PROTECTION	2
006	EL.60046.00	CLAMPS	4
007	EL.60050.00	CLAMP	2
011	EL.50071.00	WASHER	4
012	EL.60117.00	SCREW	2
013	EL.60136.00	SCREW	4
014	EL.60137.00	SCREW M6x25 UNI 5931 8.8	10
016	EL.60138.00	FIXING SUPPORT	2
018	EL.60030.00	HOSE 3/8	1
019	EL.60030.00	HOSE 3/8	1
020	EL.60030.00	HOSE 3/8	1
021	EL.60030.00	HOSE 3/8	1

TRIPLEX MAST 6.8M (FEM IV)
CARRIAGE

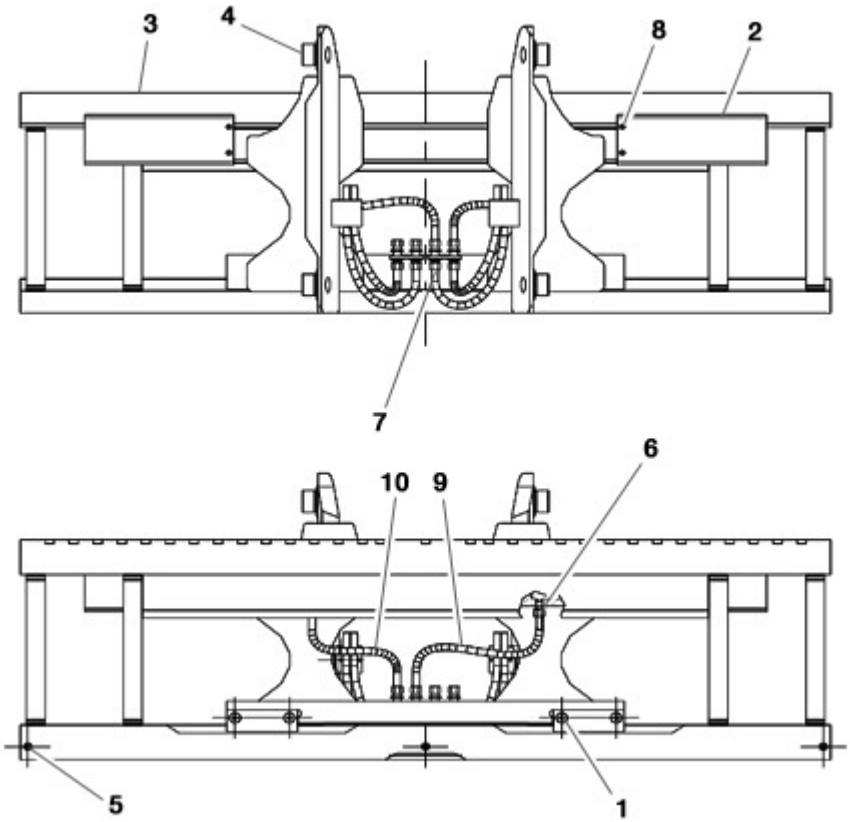

FIGURE	REFERENCE	DENOMINATION	AMOUNT
001	EL.60097.00	NSS - KIT S. S. ASSEMBLY	1
002	EL.60051.00	SIDE SHIFTER	1
003	EL.60052.00	MOBILE CARRIAGE	1
004	EL.60054.00	HOSE PROTECTION	2
005	EL.60103.00	SCREW	3
006	EL.60115.00	FIXING SUPPORT	2
007	EL.60122.00	FIXING SUPPORT	2
008	EL.60123.00	NUT	4
009	EL.60086.00	HOSE 5/16"	1
010	EL.60085.00	HOSE 5/16	1

TRIPLEX MAST 6.8M (FEM IV)
LATERAL DISPLACEMENT

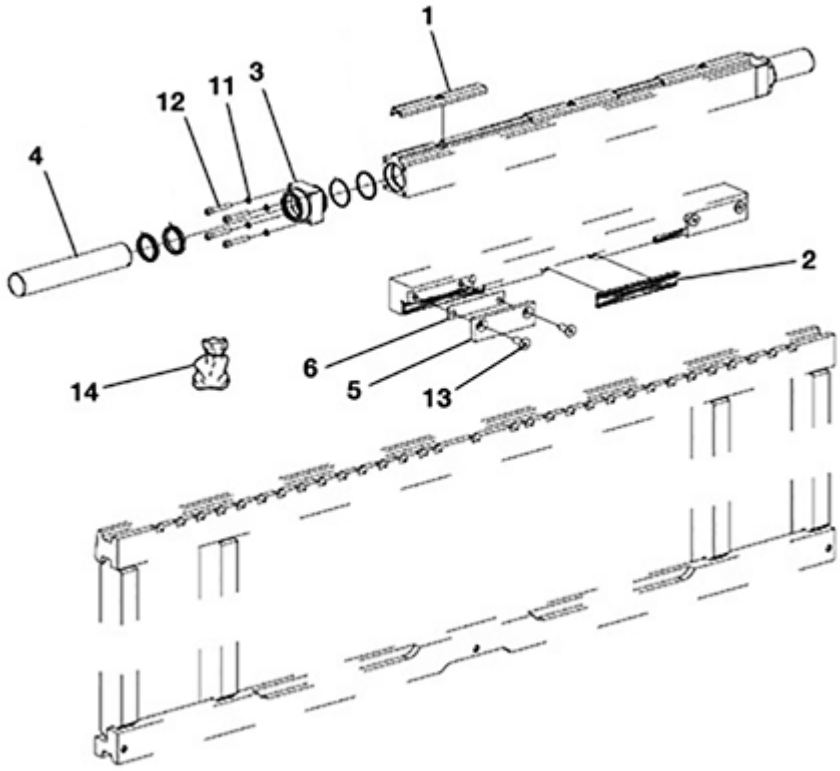

FIGURE	REFERENCE	DENOMINATION	AMOUNT
001	EL.60007.00	BUSH	3
002	EL.60008.00	BUSH	3
003	EL.60010.00	PLUG	2
004	EL.60011.00	ROD	2
005	EL.60044.00	PLATE	2
006	EL.60045.00	SHIM	2
011	EL.50049.00	WASHER	8
012	EL.60120.00	SCREW	8
013	EL.60146.00	SCREW	4
014	EL.60145.00	SEAL KIT	2

TRIPLEX MAST 6.8M (FEM IV)
LATERAL CYLINDER

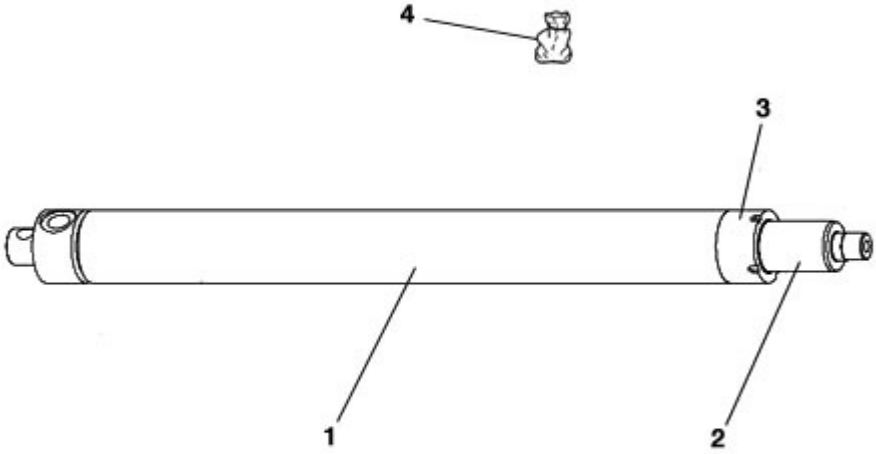

FIGURE	REFERENCE	DENOMINATION	AMOUNT
001	EL.60022.00	PLUG	2
002	EL.60026.00	ROD ASSY	2
003	EL.60021.00	SHELL PLUG	2
004	EL.50094.00	FREE LIFT CYLINDER SEALS KIT	2

TRIPLEX MAST 6.8M (FEM IV)
FREE LIFT CYLINDER

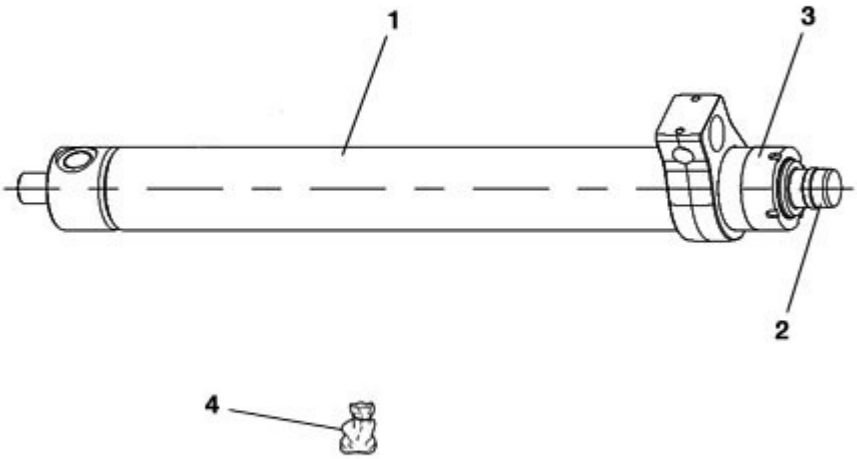

FIGURE	REFERENCE	DENOMINATION	AMOUNT
001	EL.60034.00	COVER	2
002	EL.60024.00	ROD ASSY	2
003	EL.60035.00	SHELL PLUG	2
004	EL.50094.00	FREE LIFT CYLINDER SEALS KIT	2

09. MACHINE FUNCTIONS IMPLEMENTS

INCLINATION CYLINDER

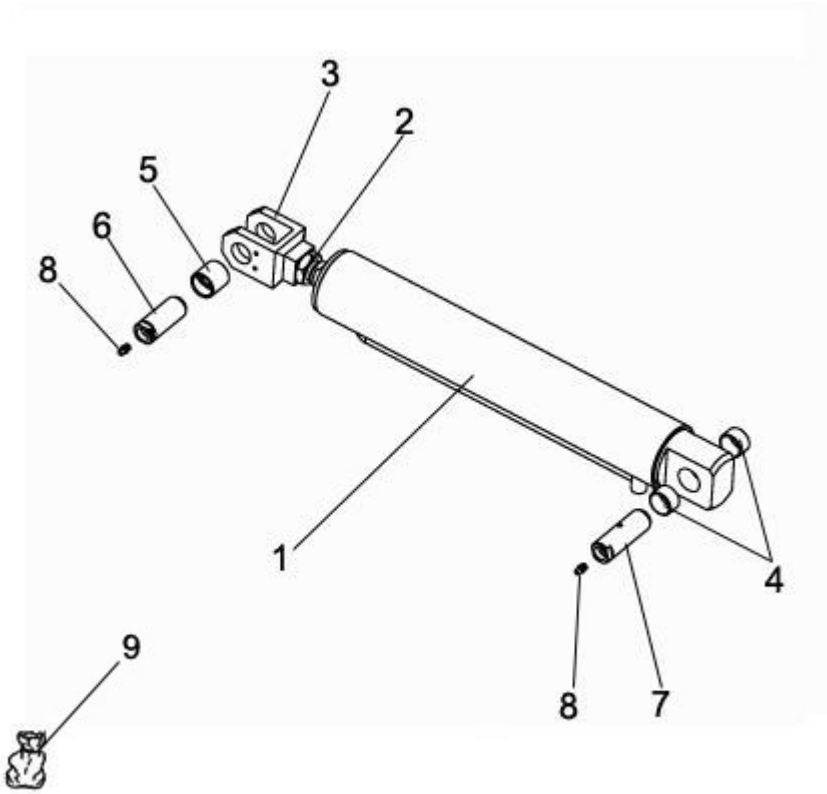

FIGURE	REFERENCE	DENOMINATION	AMOUNT
001	30.09010.00	CYLINDER D/E 75X440	2
002	10.01117.00	NUT DIN439	2
003	10.01115.01	CYLINDER ROD HEAD	2
004	949.03020.00	BUSHING 30x34x20 DIN 1494	4
005	08.00527.00	BEARING	1
006	15.01216.00	SHAFT CIL/COA	1
007	42.20102.00	SHAFT CIL/COA	1
008	901.08000.33	GREASER DIN71412-A M8x1,25	2
009	30.09017.00	JOINTS KIT	1

09. MACHINE FUNCTIONS IMPLEMENTS

INCLINATION CYLINDER

CHASSIS: 66414

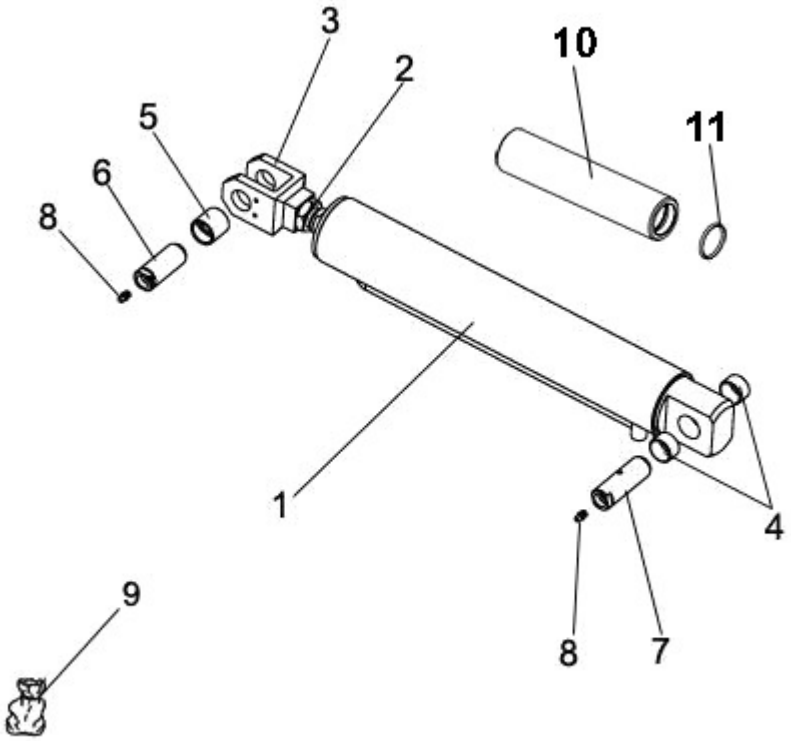

FIGURE	REFERENCE	DENOMINATION	AMOUNT
001	30.09010.02	CYLINDER D/E 75X220	2
002	10.01117.00	NUT DIN439	2
003	10.01115.01	CYLINDER ROD HEAD	2
004	949.03020.00	BUSHING 30x34x20 DIN 1494	4
005	08.00527.00	BEARING	1
006	15.01216.00	SHAFT CIL/COA	1
007	42.20102.00	SHAFT CIL/COA	1
008	901.08000.33	GREASER DIN71412-A M8x1,25	2
009	30.09017.00	JOINTS KIT	1
010	30.09018.00	TUBE MET. 50X36X220	1
011	201.34535.50	GASKET DIN3770	1

09. MACHINE FUNCTIONS IMPLEMENTS

FORKS

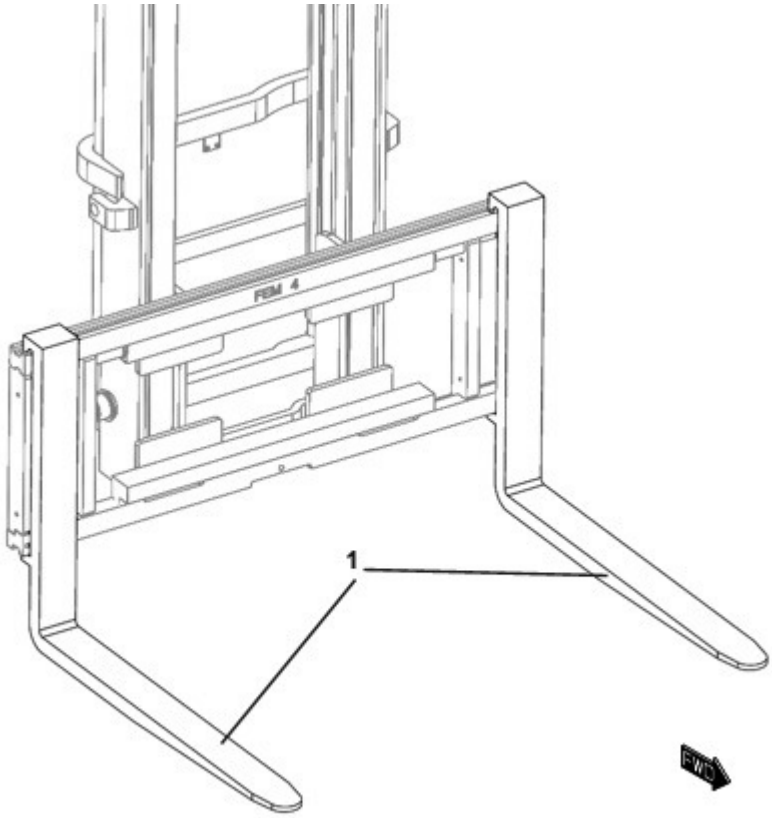

FIGURE	REFERENCE	DENOMINATION	AMOUNT
001	30.09002.00	FORK 1200 FEM IV	2

13. ACCESSORIES

LOAD PROTECTOR 1600MM

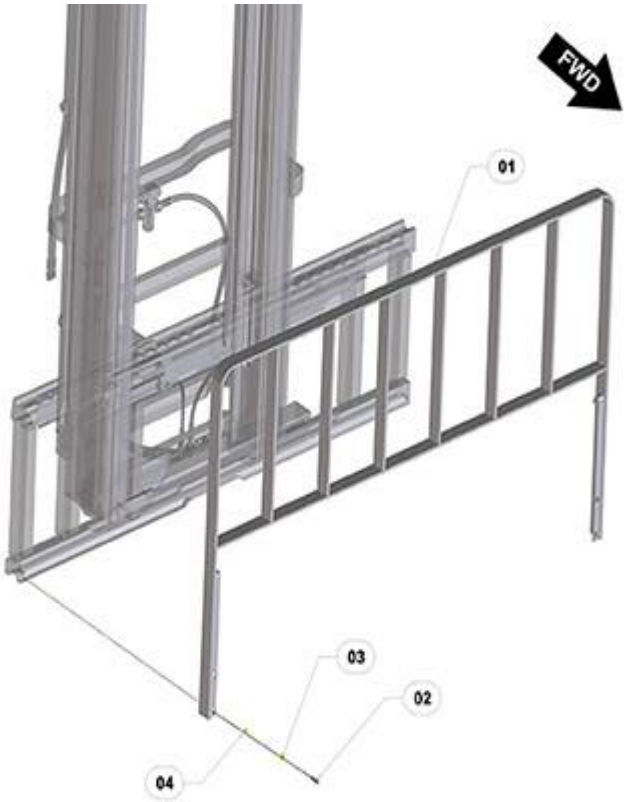

FIGURE	REFERENCE	DENOMINATION	AMOUNT
001	30.13100.00	LOAD PROTECTOR 50X1401X1730	1
002	604.10060.86	SCREW DIN931	4
003	104.10000.00	WASHER DIN7980 D10	4
004	101.10000.66	WASHER DIN125 D10	4

13. ACCESSORIES

LOAD PROTECTOR 1600MM

CHASSIS: 75744

FIGURE	REFERENCE	DENOMINATION	AMOUNT
001	30.13100.01	LOAD PROTECTOR 50X1401X1730	1
002	601.10025.86	SCREW DIN912	2
003	101.10000.66	WASHER DIN125 D10	2
004	104.10000.00	WASHER DIN7980 D10	2

COMMENTS

MOD.4453

09. MACHINE FUNCTIONS IMPLEMENTS

BUCKET

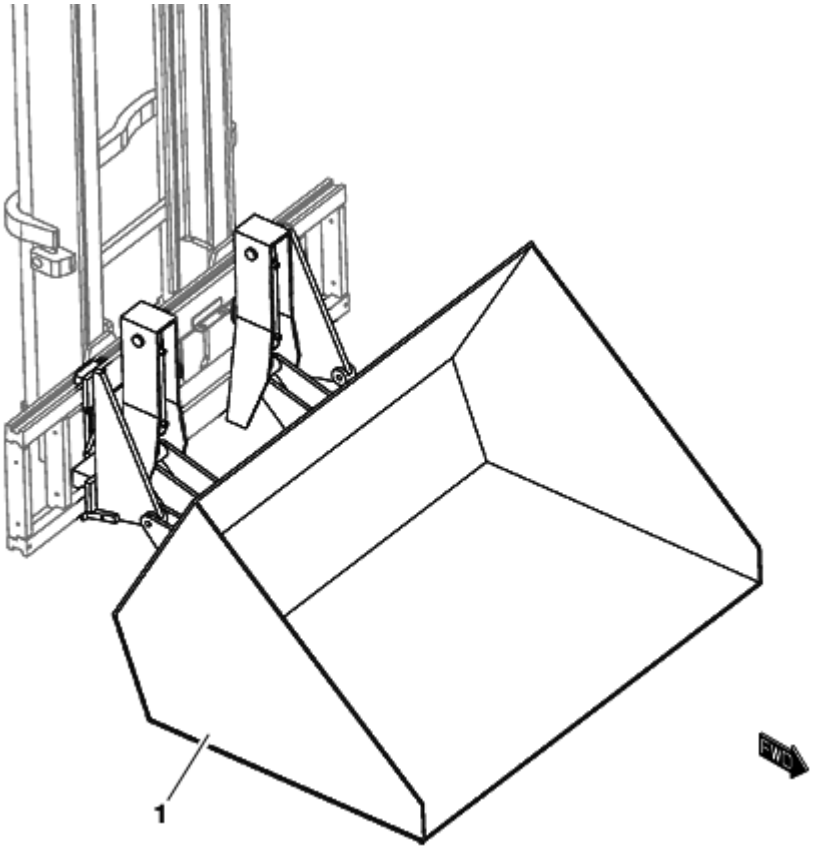

FIGURE	REFERENCE	DENOMINATION	AMOUNT
001	30.13203.00	BUCKET 800L FEM4	1
001	30.13204.00	BUCKET 1000L FEM4	1
001	30.13205.00	BUCKET 1500L FEM4	1

10. HYDRAULIC INSTALLATION
DISTRIBUTOR

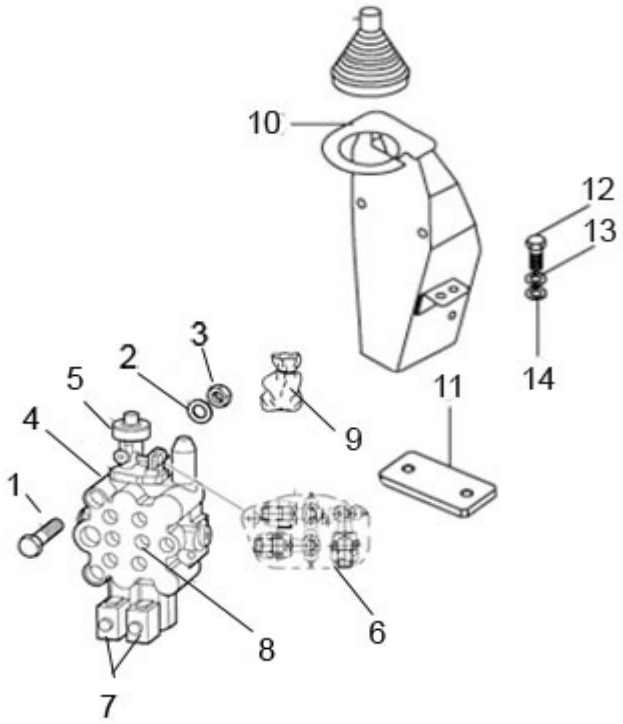

FIGURE	REFERENCE	DENOMINATION	AMOUNT
001	604.08055.86	BOLT DIN931 M8x55	1
001B	604.08045.86	SCREW DIN931 M8x45	2
002	104.08000.00	WASHER DIN7980 D8	3
003	711.08000.66	NUT DIN982 M8	3
004	RQN9700.164	MULTIPLE COVER	1
005	RQ7000/284	COUPLING PIECE	1
006	RQN9700.306	BALL JOINT SET	1
007	12.10351.00	COIL 14VDC 1.36A	2
008	12.10030.00	CONTROL VALVE 2E	1
009	RQN9700.203	GASKET SET	1
010	12.10011.00	FIXING SUPPORT	1
011	30.10030.00	SUPPORT 10X60X120	1
012	603.12025.86	SCREW DIN933	2
013	104.12000.00	WASHER DIN7980 D12	2
014	101.12000.66	WASHER DIN125 D12	2

10. HYDRAULIC INSTALLATION

DISTRIBUTOR

CHASSIS: 74297

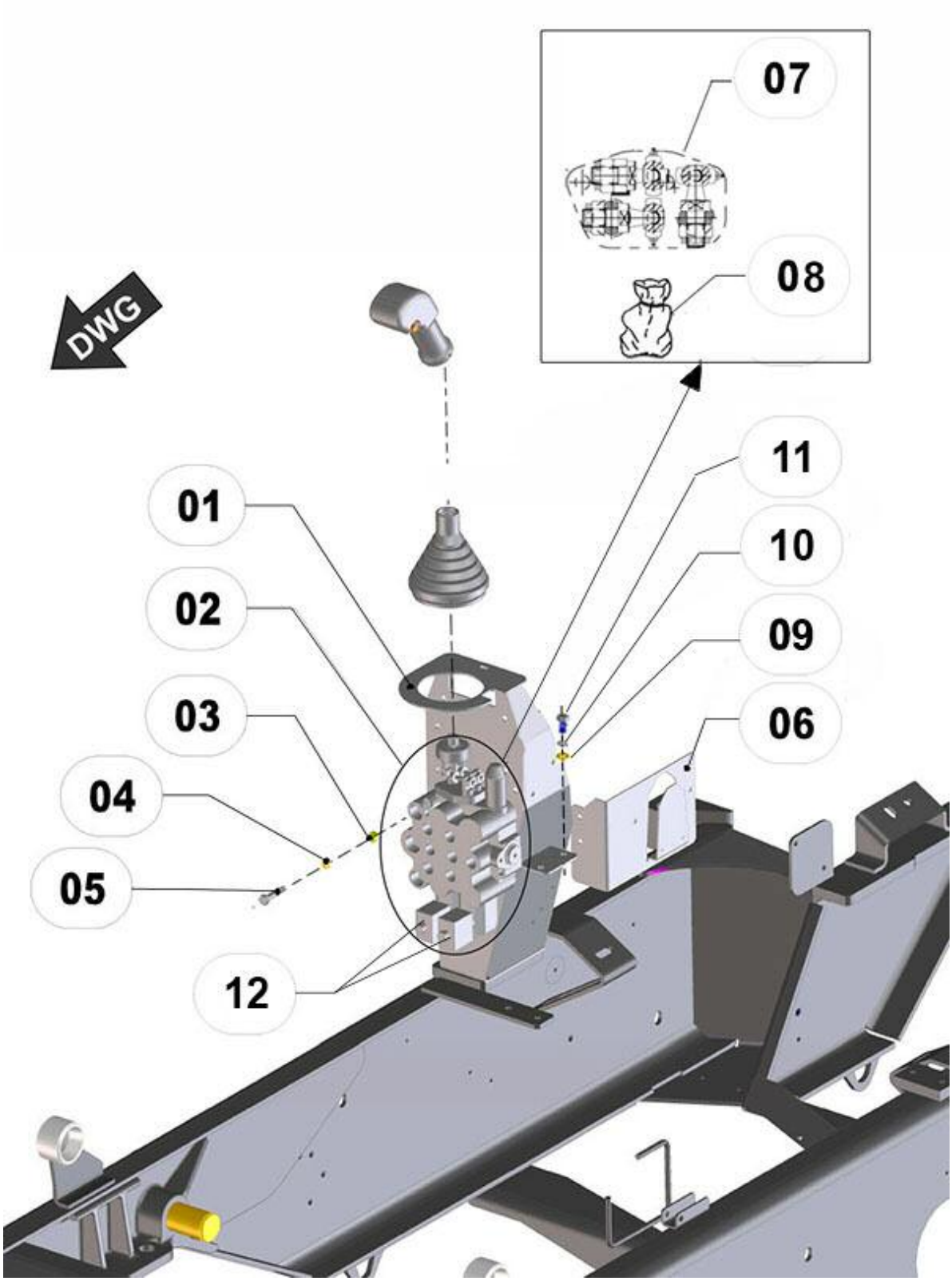

FIGURE	REFERENCE	DENOMINATION	AMOUNT
001	12.10011.01	DISTRIBUTOR FIX. SUPPORT	1
002	12.10030.00	CONTROL VALVE 2E	1
003	711.08000.66	NUT DIN982 M8	3

004	104.08000.00	WASHER DIN7980 D8	3
005	604.08040.86	SCREW DIN931	3
006	30.02080.00	STRIGHT SUPPORT	1
007	RQN9700.306	BALL JOINT SET	1
008	RQN9700.203	GASKET SET	1
009	101.12000.66	WASHER DIN125 D12	2
010	104.12000.00	WASHER DIN7980 D12	1
011	603.12025.86	SCREW DIN933	2
012	12.10351.00	COIL 14VDC 1.36A	2

COMMENTS

MOD.4470

10. HYDRAULIC INSTALLATION

HYDRAULIC TANK

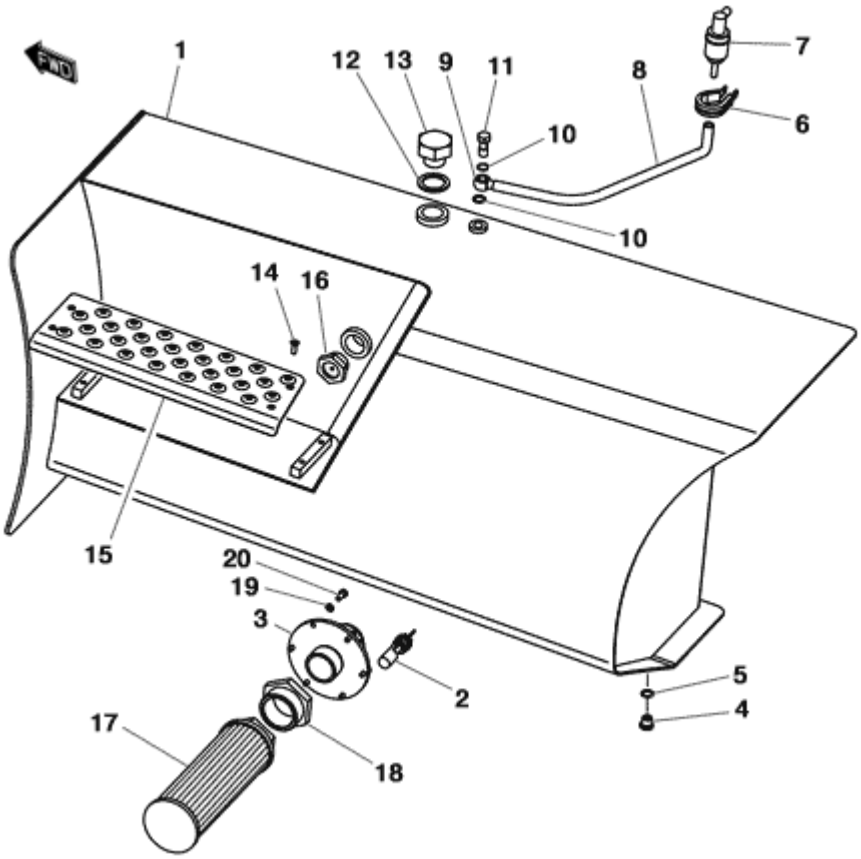

FIGURE	REFERENCE	DENOMINATION	AMOUNT
001	30.10040.00	DEPOSIT HYDRAULIC	1
002	43.70261RE00	BUOY OIL LEVEL INDICATOR	1
003	43.70406.00	AD. FILTER SUPPORT	1
004	10.00921.00	CAP M14X150 DIN908	1
005	107.14000.10	WASHER AL 14x20x1.5	1
006	830.03006.00	CLAMP LOOP	1
007	45.01526.00	PREFILTER FUEL/HYDRAULIC	1
008	469.03014.00	HOSE L/P MAT. 8x14	1
009	45.04106.00	NIPPLE O/TB	1
010	28.00341.00	METALLIC GASKET BUNA D1/4	2
011	28.00340.00	SIMPLE SCREW FITTING 1/4 Gx26	1
012	43.13444.00	GASKET MET. BUNA	1
013	70.10246.00	CAP	1
014	618.06015.86	SCREW DIN7991	4
015	30.10043.00	SHEET 3X140X400	1
016	30.10041.00	LEVEL VISUAL INDICATOR 1	1
017	46.10047.00	OIL FILTER 180 L	1
018	46.58082.00	FITTING M/H 2GAS-1.1/2GAS	1

10. HYDRAULIC INSTALLATION
HYDRAULIC TANK

FIGURE	REFERENCE	DENOMINATION	AMOUNT
019	104.06000.00	WASHER DIN7980 D6	6
020	603.06015.86	SCREW DIN933 M6x15	6

10. HYDRAULIC INSTALLATION
LINE FILTERS

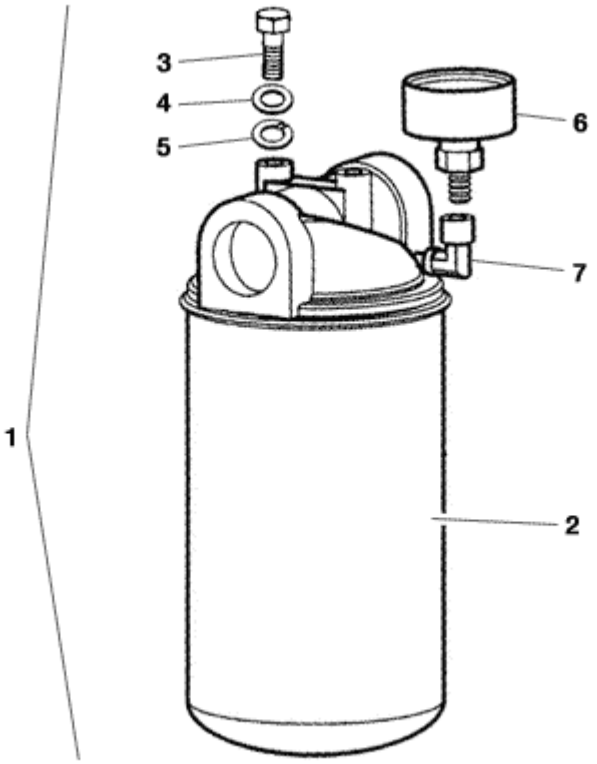

FIGURE	REFERENCE	DENOMINATION	AMOUNT
001	60.20101.00	COMPLETE OIL FILTER	1
002	60.20100.00	FILTER ELEMENT	1
003	603.08020.86	SCREW DIN933 M8x20	2
004	101.08000.66	WASHER DIN125 D8	2
005	104.08000.00	WASHER DIN7980 D8	2
006	60.20102.00	INDICATOR	1

10. HYDRAULIC INSTALLATION

TRANSMISSION DIAGRAM

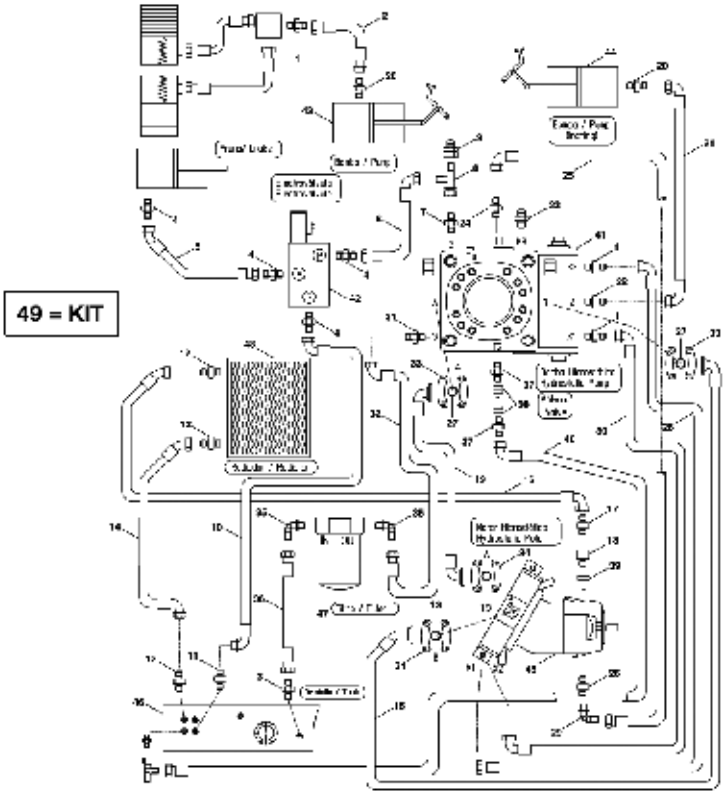

FIGURE	REFERENCE	DENOMINATION	AMOUNT
001	57.10316.00	FITTING M/M M14X1.5-M12X1.5	3
002	30.10303.00	HYDRAULIC HOSE R1T1/4 1110 TL-TL	1
003	12.10301.00	FITTING	1
004	20.10242.00	NIPPLE M/M	4
005	30.10304.00	HYDRAULIC HOSE R1T1/4 960 TL-C45 TL	1
006	30.10305.00	HYDRAULIC HOSE R1T1/4 660 TL-C90 TL	1
007	46.10846.00	FITTING M/M M16XM14	1
008	46.10401.00	FITTING	1
009	46.10402.00	COUPLING	1
010	30.10308.00	HYDRAULIC HOSE R1T1/4 1770 C90TL-C90TL	1
011	46.10849.00	FITTING	1
012	57.10307.00	FITTING	3
013	30.10302.00	GASKET 1	2
014	30.10331.00	HYDRAULIC HOSE R1T3/4 1475 C90 TL-C90 T	1
015	30.10314.00	HYDRAULIC HOSE R1T3/4 880 BR90 - BR90	1
016	30.10309.00	HYDRAULIC HOSE R1T3/4 2525 C90TL-C45TL	1
017	70.10221.00	FITTING M/M M30x1/2BSP	1
018	12.10332.00	FITTING	1

10. HYDRAULIC INSTALLATION
TRANSMISSION DIAGRAM

FIGURE	REFERENCE	DENOMINATION	AMOUNT
019	30.10315.00	HYDRAULIC HOSE R1T3/4 1400 BR90 - BR90	1
020	57.10317.00	FITTING	2
021	30.10307.00	HYDRAULIC HOSE R1T1/4 2740 C90TL-C90TL	1
022	12.10307.00	FITTING	1
023	70.10218.00	FITTING M/M M16x2-M12x1.5	1
024	70.10210.00	FITTING M/M M26xM22	1
025	30.10306.00	HYDRAULIC HOSE R1T5/8 1720 TL-C90 TL	1
026	46.10838.00	FITTING M/M M26xM18	1
027	30.10301.00	GASKET 3/4	1
028	30.10316.00	HYDRAULIC HOSE R1T1/4 1690 TL-C90 TL	1
029	46.10839.00	FITTING	1
030	30.10313.00	HYDRAULIC HOSE R1T1 1690 TL-C90 TL	1
031	46.10835.00	FITTING	1
032	30.10312.00	HYDRAULIC HOSE R1T1 530 TL-C90 TL	1
033	70.10212.00	CLAMP SAE6000 3/4	1
034	46.10845.00	CLAMP SAE6000 1	2
035	70.10202.00	FITTING C90M/M 11/4G - 11/4G	2
036	30.10311.00	HYDRAULIC HOSE R1T1 570 TL-C90 TL	1
037	46.10824.00	FITTING	2
038	08.00316.00	METALLIC GASKET BUNA D1/2 G	2
039	46.10827.00	METAL BUNA GASKET M18X1.5	1
040	30.10336.00	HYDRAULIC HOSE R1T1/2 1700 TL-C90 TL	1
041	57.03250.01	HYDR. PUMP 56CC HYDROMATIC	1
041	46.10401.00	FITTING	1
042	20.05005.00	SELECTION VALVE 3 WAYS	1
043	57.05010.00	BRAKE PUMP	1
044	20.03070.00	FOOT BRAKING PUMP D15.8X38 OIL MIN.	1
045	30.03020.00	HYDR. ENGINE 107CC. PISTONS DA	1
046	30.10040.00	DEPOSIT HYDRAULIC	1
047	60.20101.00	COMPLETE OIL FILTER	1
048	30.02050.00	RADIATOR	1
049	30.10300.00	PIPES KIT	1

10. HYDRAULIC INSTALLATION

TRANSMISSION DIAGRAM

CHASSIS: 76536

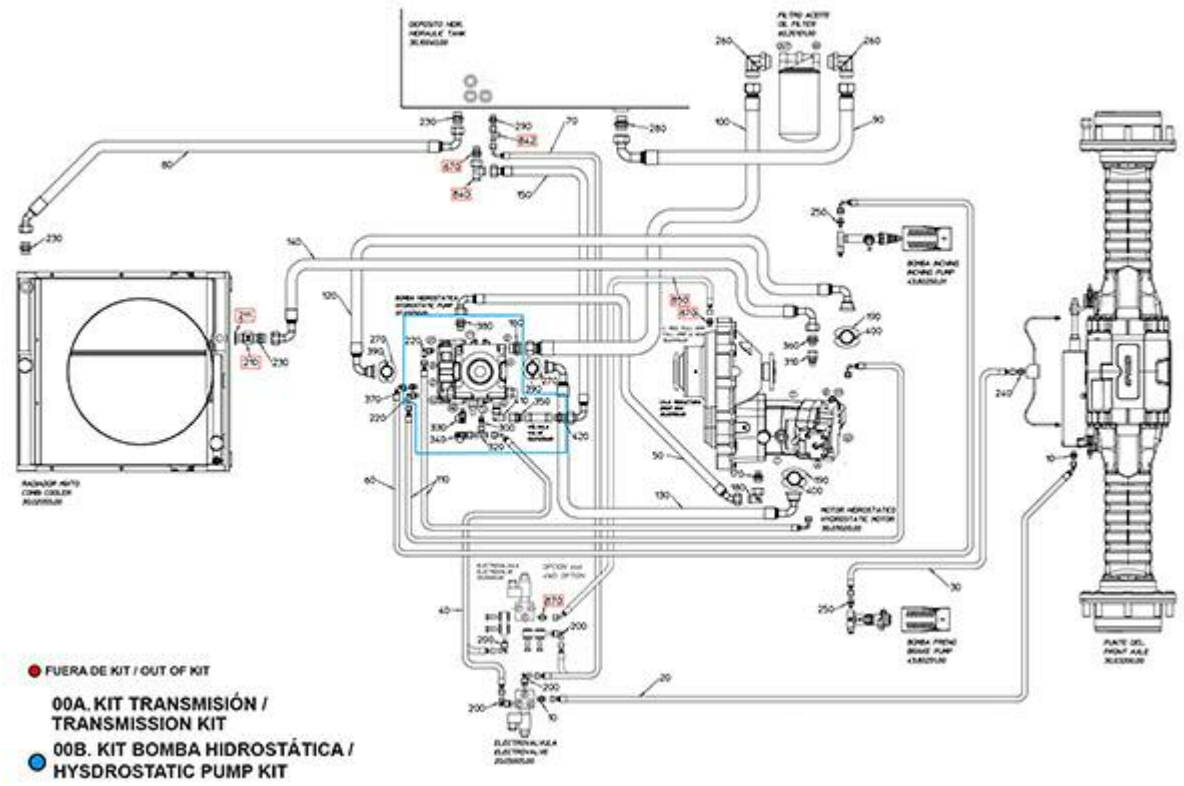

FIGURE	REFERENCE	DENOMINATION	AMOUNT
00A	30.10500.00	C500 HYDRAULIC TRANSMISSION KIT	1
00B	30.10565.00	HYDROSTATIC PUMP HYDRAULIC KIT	1
010	20.10242.00	NIPPLE M/M	2
020	30.10501.00	HOSE 1/4" L810	1
030	30.10502.00	HOSE 1/4" L1070	1
040	30.10503.00	HOSE 1/4" L990	1
050	30.10504.00	HOSE 5/8" L1740	1
060	30.10505.00	HOSE 1/4" L2970	1
070	30.10506.00	HOSE 1/4" L1450	1
080	30.10507.00	HOSE 3/4" L1350	1
090	30.10508.00	HOSE 1/4" L590	1
100	30.10509.00	HOSE 1/4" L850	1
110	30.10510.00	HOSE 1/4" L1580	2
120	30.10511.00	HOSE 3/4" L800	1
130	30.10512.00	HOSE 3/4" L1510	1
140	30.10514.00	HOSE 3/4" L2340	1
150	30.10515.00	HOSE 5/8" L1300	1
160	46.10835.00	FITTING	1
170	46.10838.00	FITTING M/M M26xM18	1

180	46.10839.00	FITTING	1
190	46.10845.00	CLAMP SAE6000 1	4
200	46.58111.00	RACOR C90MO/M MB 1/4"BSP MM M1	2
210	43.60233.91	FITTING	1
211	45.01423.00	GASKET	1
220	48.10242.00	FITTING C90M/M -M14 / M12	2
230	57.10307.00	FITTING	3
240	57.10316.00	FITTING M/M M14X1.5-M12X1.5	1
250	57.10317.00	FITTING	2
260	70.10202.00	FITTING C90M/M 11/4G - 11/4G	2
270	70.10212.00	CLAMP SAE6000 3/4	4
280	12.10301.00	FITTING	1
290	46.10849.00	FITTING	1
300	48.10245.00	TUBE M14/M16	1
310	46.10882.00	RACORD	1
320	70.10258.00	FITTING	1
330	70.10218.00	FITTING M/M M16x2-M12x1.5	1

10. HYDRAULIC INSTALLATION

TRANSMISSION DIAGRAM

CHASSIS: 76536

FIGURE	REFERENCE	DENOMINATION	AMOUNT
340	46.10402.00	COUPLING	1
350	46.58132.00	FITTING	1
360	46.58134.00	RACOR M/M M22-MM M30	1
370	12.10307.00	FITTING	1
380	70.10210.00	FITTING M/M M26xM22	1
390	30.10301.00	GASKET 3/4	2
400	30.10302.00	GASKET 1	2
410	46.58187.00	RACOR C90MO/M M22-M22	1
420	48.10433.00	FITTING	2
430	30.10334.00	FITTING M18X1.5	2
440	30.10527.00	TUBE 2SN 3/8 L1900 TLM18-C90TL	1
450	30.10526.00	TUBE 2SN 3/8 L2640 TLM18-C90TL	1
670	48.10433.00	FITTING	4
840	70.10234.00	FITTING	1
842	46.10401.00	FITTING	2
850	30.10541.00	TUBE 1SC 1/4 L1100 TLM14-C45TL	1
870	20.10242.00	NIPPLE M/M	2

COMMENTS

MOD.4416A

10. HYDRAULIC INSTALLATION

SERVICE DIAGRAM

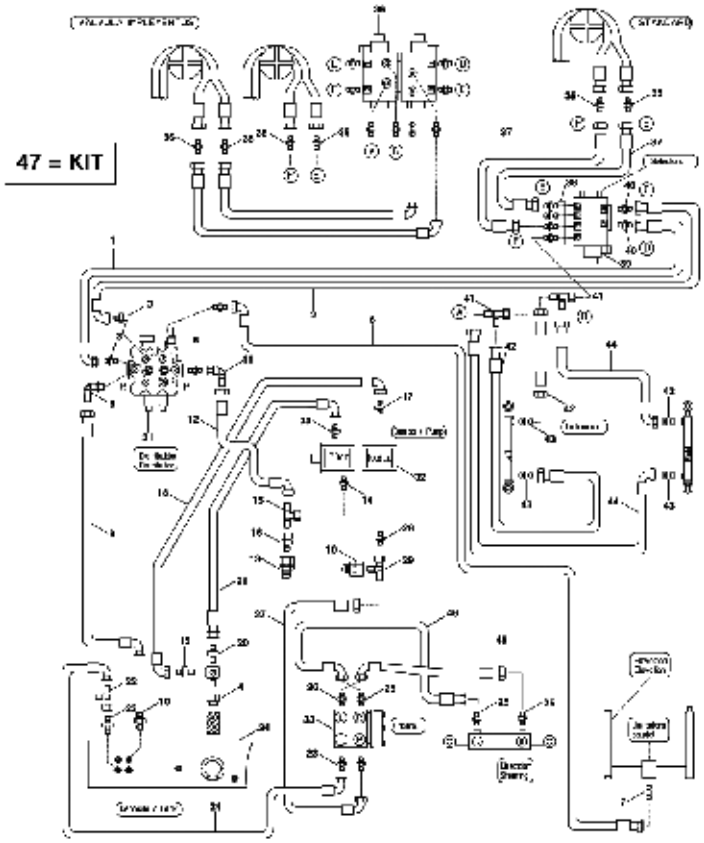

FIGURE	REFERENCE	DENOMINATION	AMOUNT
001	30.10317.00	HYDRAULIC HOSE R2T1/2 710 TL-C90 TL	1
002	30.10318.00	HYDRAULIC HOSE R2T1/2 860 TL-C90 TL	1
003	46.10824.00	FITTING	2
004	46.58082.00	FITTING M/H 2GAS-1.1/2GAS	1
005	46.10401.00	FITTING	2
005	70.10230.00	FITTING	2
006	30.10319.00	HYDRAULIC HOSE R2T5/8 2460 TL-C90 TL	1
007	70.10207.00	FITTING	1
008	57.10341.00	FITTING	1
009	30.10321.00	HYDRAULIC HOSE R1T1 1680 TL-C90 TL	1
010	57.10343.00	FITTING	2
011	46.10839.00	FITTING	1
012	30.10332.00	HYDRAULIC HOSE R2T5/8 525 TL-C90 TL	1
013	64.10226.00	FITTING	1
014	70.10230.00	FITTING	1
016	30.10333.00	FITTING	1
017	70.10230.00	FITTING	1
018	30.10324.00	HYDRAULIC HOSE R1T3/4 630 C90 TL-C90 TL	1

10. HYDRAULIC INSTALLATION
SERVICE DIAGRAM

FIGURE	REFERENCE	DENOMINATION	AMOUNT
019	70.10207.00	FITTING	1
020	12.10301.00	FITTING	1
021	30.10325.00	HYDRAULIC HOSE R1T1 620 TL-C90 TL	1
022	46.10911.00	FITTING	1
023	46.10824.00	FITTING	2
024	30.10322.00	HYDRAULIC HOSE R1T1/2 2490 C90TL-C90TL	1
025	30.10334.00	FITTING M18X1.5	2
026	70.10229.00	FITTING	3
027	30.10323.00	HYDRAULIC HOSE R2T3/8 1500 TL - C90 TL	1
028	70.10222.00	FITTING M/M M18x3/8BSP	1
029	70.10223.00	FITTING M/M/TL M18x1,5	1
030	70.10226.00	FITTING M/TL M16x2- M18x1,5	1
031	12.10030.00	CONTROL VALVE 2E	1
032	30.10001.00	OIL PUMP DOUBLE 30/10.6CC	1
033	43.70613.01	HYDROSTATIC STEERING 100 CC	1
034	30.10040.00	DEPOSIT HYDRAULIC	1
035	57.10334.00	NIPPLE	6
036	30.10400.00	VALVE 8 WAYS	1
037	30.10330.00	HYDRAULIC HOSE R1T3/8 1200 TL - TL	2
038	46.10849.00	FITTING	4
039	30.10401.00	VALVE 6 WAYS-80 L	1
040	70.10253.00	FITTING	2
041	30.10401.00	VALVE 6 WAYS-80 L	1
042	30.10328.00	HYDRAULIC HOSE R1T1/4 635 TL - C90 TL	2
043	70.10239.00	FITTING M/M M16X1,5 - 1/4GAS	4
044	30.10329.00	HYDRAULIC HOSE R1T1/4 2030 TL - C90 TL	2
045	30.10326.00	HYDRAULIC HOSE R2T3/8 2710 TL - C90 TL	1
046	30.10327.00	HYDRAULIC HOSE R2T3/8 3080 TL - C90 TL	1
047	30.10310.00	PIPES KIT	1

10. HYDRAULIC INSTALLATION

SERVICE DIAGRAM

CHASSIS: 76536

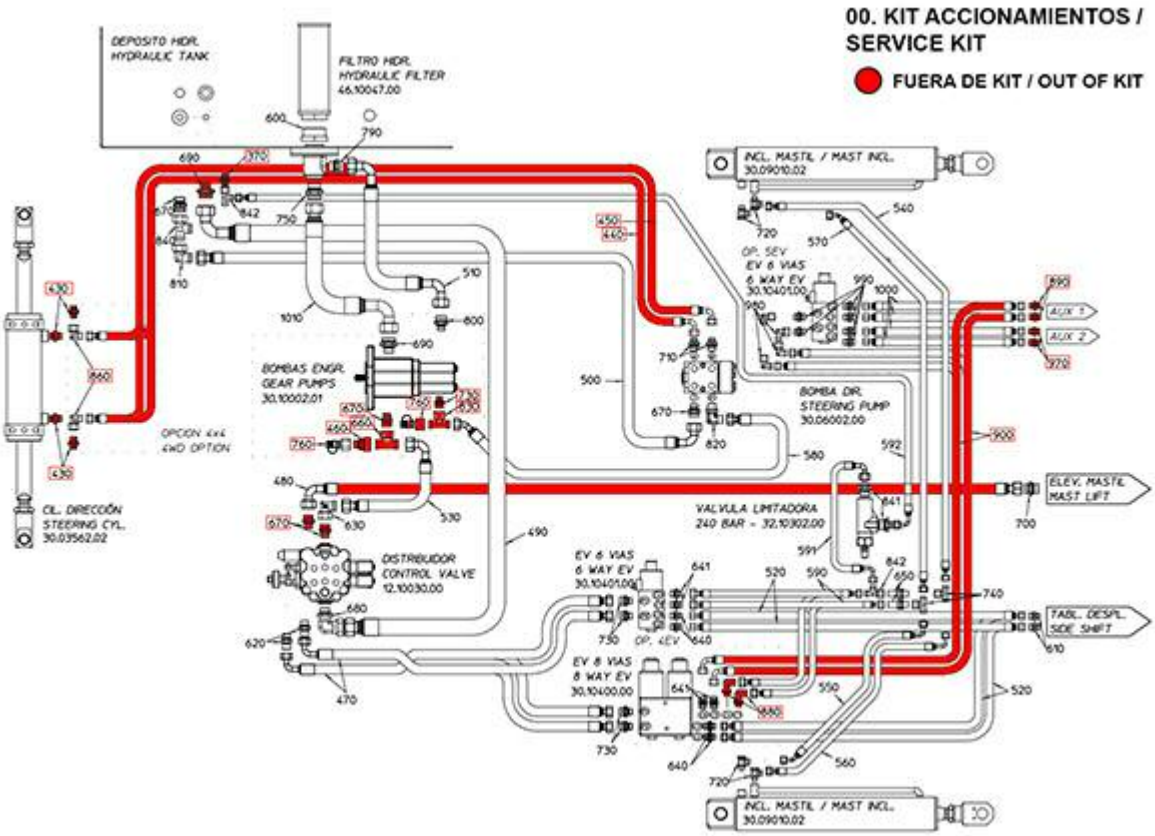

FIGURE	REFERENCE	DENOMINATION	AMOUNT
000	30.10520.00	HYDRAULIC SERVICE KIT	1
470	30.10521.00	TUBE SAE100-R17 1/2 L830 TLM22	1
480	30.10523.00	TUBE 2SN 5/8 L2230 TLM26-C90TL	1
490	30.10524.00	TUBE SAE100-R17 1 L1660 TL1BSP	1
500	30.10525.00	TUBE 1SC 5/8 L1920 TLM26-C90TL	1
510	30.10528.00	TUBE 1SC 3/4 L610 TLM30-C90TLM	1
520	30.10530.00	TUBE 2SN 3/8 L1040 TLM16-TLM16	2
530	30.10531.00	TUBE SAE100-R17 5/8 L660 TLM26	1
540	30.10532.00	TUBE 2SN 1/4 L1060 TLM16-TLM16	1
550	30.10533.00	TUBE 2SN 1/4 L430 C45TLM16-C45	1
560	30.10534.00	TUBE 2SN 1/4 L400 TLM16-C45TLM	1
570	30.10535.00	TUBE 2SN 1/4 L1100 TLM16-C45TL	1
580	30.10536.00	TUBE SAE100-R17 1/2 L1480 C45T	1
590	30.10537.00	TUBE 2SN 1/4 L640 TLM16-TLM18	2
591	30.10538.00	HOSE 2SN 1/4" L490	1
592	30.10539.00	HOSE 2SN 1/4" L2060	1
600	46.58082.00	FITTING M/H 2GAS-1.1/2GAS	1
610	32.10130.00	GASKET COMPAC. D128X90X4	2

620	46.10824.00	FITTING	2
630	46.10839.00	FITTING	1
640	46.10849.00	FITTING	1
640	46.10849.00	FITTING	1
641	48.10836.00	RACOR M/M MB 3/8 BSP - MM M18L	2
641	48.10836.00	RACOR M/M MB 3/8 BSP - MM M18L	2
650	48.10109.00	FITTING	2
670	48.10433.00	FITTING	4
670	48.10326.00	FITTING	1
680	57.10341.00	FITTING	1
690	57.10343.00	FITTING	1
700	70.10207.00	FITTING	1
710	70.10229.00	FITTING	2
720	70.10232.00	FITTING C90M/M M16-1.5x1/4BSP	4
730	70.10253.00	FITTING	2
730	70.10253.00	FITTING	2
740	70.10258.00	FITTING	2
750	12.10301.00	FITTING	1

10. HYDRAULIC INSTALLATION

SERVICE DIAGRAM

CHASSIS: 76536

FIGURE	REFERENCE	DENOMINATION	AMOUNT
790	57.10307.00	FITTING	1
810	48.10223.00	FITTING	1
820	20.10268.00	FITTING	1
840	70.10234.00	FITTING	1
841	46.01258.00	RACCORD M/M 3/4BSP-M18	2
842	46.10401.00	FITTING	2
860	48.10451.00	RACOR C90M/TL M18X1,5	2

COMMENTS

MOD.4416A

10. HYDRAULIC INSTALLATION

VALVES

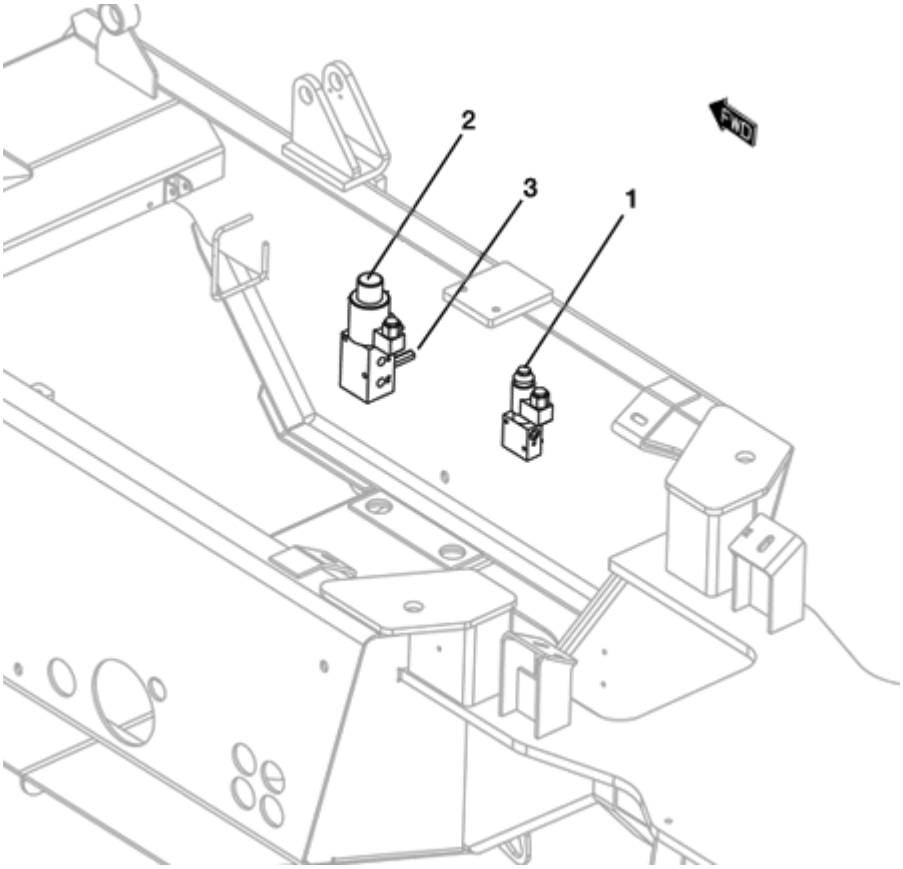

FIGURE	REFERENCE	DENOMINATION	AMOUNT
001	20.05005.00	SELECTION VALVE 3 WAYS	1
002	30.10401.00	VALVE 6 WAYS-80 L	1
003	20.10203.00	SPACER	2

11. ELECTRIC INSTALLATION

JOYSTICK

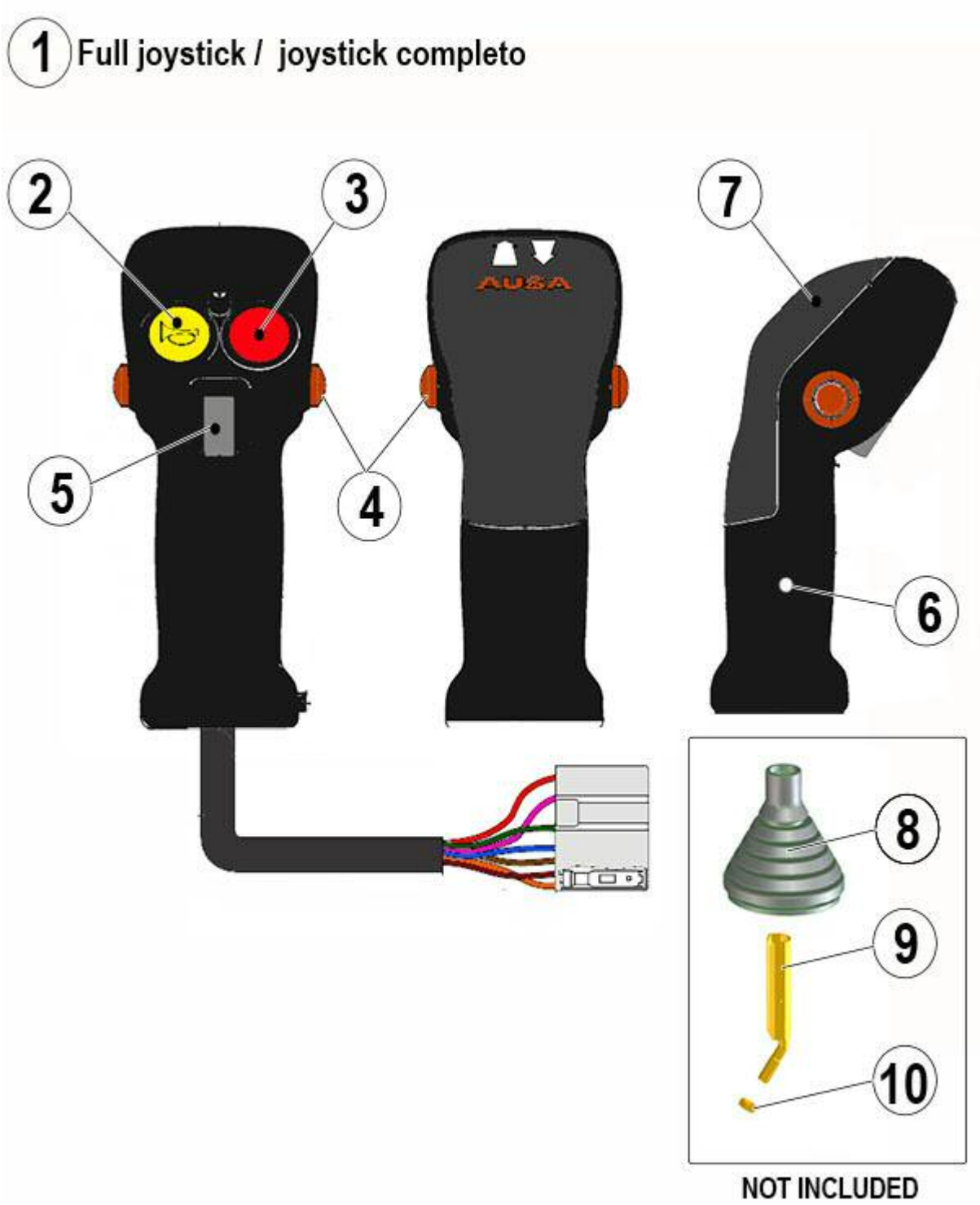

FIGURE	REFERENCE	DENOMINATION	AMOUNT
001	12.11013.00	JOYSTICK	1
002	10.14322.00	HORN BUTTON	1
003	10.14323.00	2ND SPEED BUTTON	1
004	10.14319.00	BUTTON 4TH VALVE	2
005	10.14329.01	SWITCH OTTO F-N-R	1
006	N/S	NOT DISTRIBUTED	1

007	12.11013.02	NO AVAILABLE - TOP COVER JOYSTICK	1
008	43.50349.00	DUST PROTECTOR	1
009	10.13154.02	AXIS CIL/ROS 180XD25XM10	1
010	701.10000.66	NUT DIN934 M10x1.5	1

11. ELECTRIC INSTALLATION
BATTERY

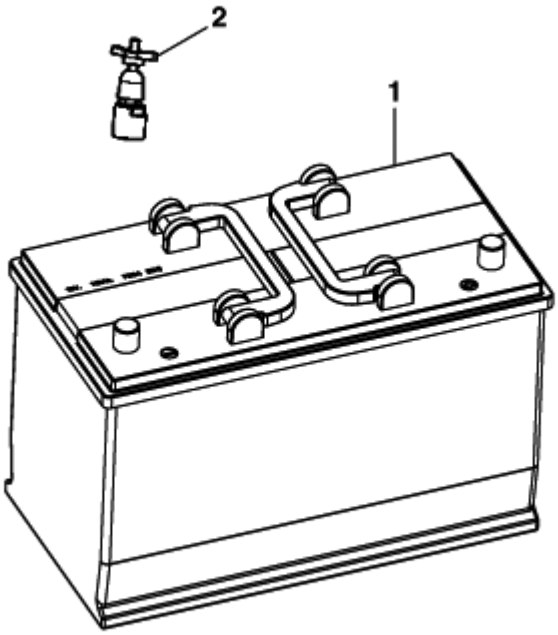

FIGURE	REFERENCE	DENOMINATION	AMOUNT
001	64.11110.00	BATTERY MHD 110.0	1
002	20.11007.00	DISCONNECTOR	1

11. ELECTRIC INSTALLATION

BATTERY SUPPORT

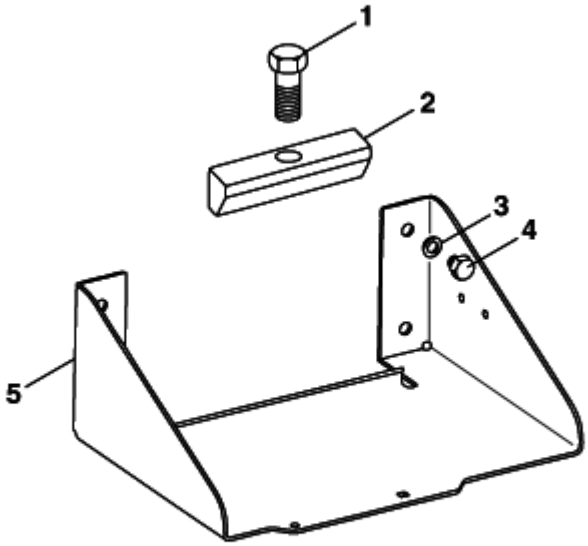

FIGURE	REFERENCE	DENOMINATION	AMOUNT
001	604.06030.86	SCREW DIN931	1
002	20.11001.00	TRAMO I/E TRANSMISION	1
003	104.10000.00	WASHER DIN7980 D10	4
004	603.10015.86	SCREW DIN933	4
005	57.11100.00	SUPPORT	1

11. ELECTRIC INSTALLATION
CABLE INSTALLATION

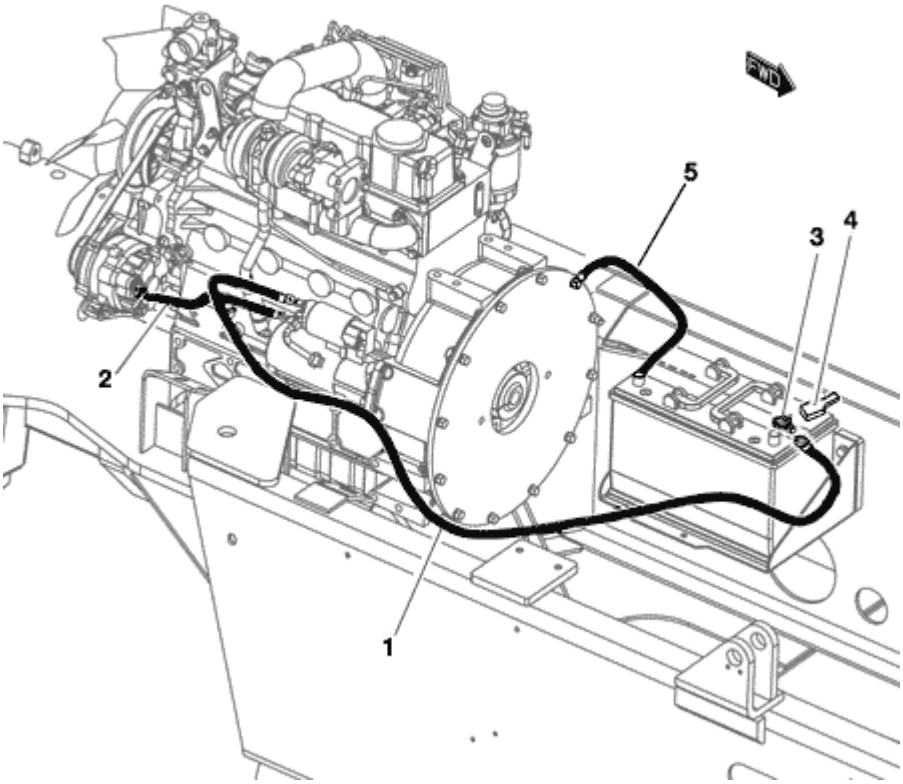

FIGURE	REFERENCE	DENOMINATION	AMOUNT
001	57.11004.00	POSITIVE WIRING HARNESS	1
002	57.11006.00	ELECTRICAL CABLE	1
003	64.11114.00		1
004	64.11115.00	PROTECTOR	1
005	57.11005.00	NEGATIVE ELECTRIC CABLE	1

11. ELECTRIC INSTALLATION

ELECTRICAL CONNECTION (GENERAL SECTION)

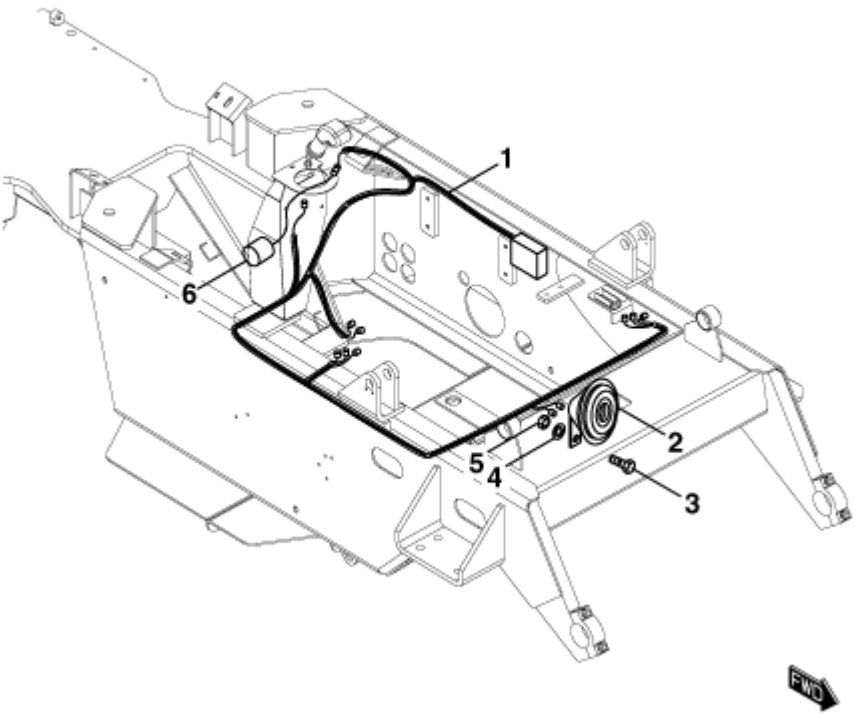

FIGURE	REFERENCE	DENOMINATION	AMOUNT
001	57.11001.01	WIRING HARNESS	1
002	70.11309.00	HORN	1
003	603.08020.86	SCREW DIN933 M8x20	1
004	104.08000.00	WASHER DIN7980 D8	1
005	711.08000.66	NUT DIN982 M8	1
006	02.14110.01	HORN	1

11. ELECTRIC INSTALLATION

ENGINE WIRING HARNESS

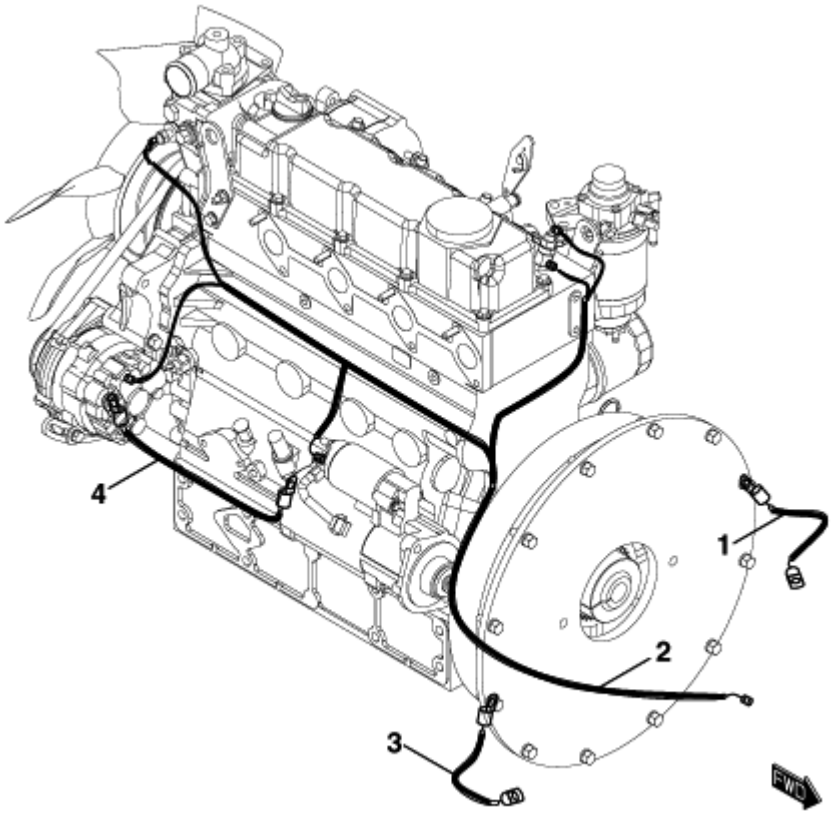

FIGURE	REFERENCE	DENOMINATION	AMOUNT
002	57.11003.00	WIRING HARNESS	1
004	57.11006.00	ELECTRICAL CABLE	1

11. ELECTRIC INSTALLATION

LIGHTS WIRING HARNESS

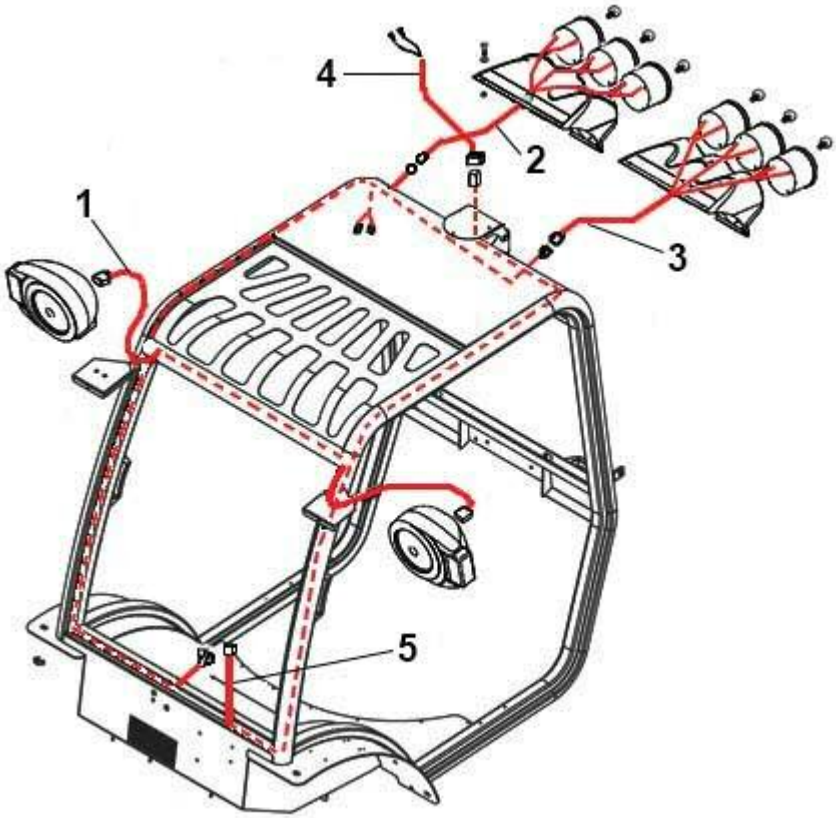

FIGURE	REFERENCE	DENOMINATION	AMOUNT
001	12.11010.00	MAIN LIGHTS WIRING HARNESS	1
002	12.11011.00	REAR RIGHT LIGHTS WIRING HARNESS	1
003	12.11012.00	REAR LEFT LIGHTS WIRING HARNESS	1
004	12.11005.00	ROTATIVE BEACON WIRING HARNESS EXTENDED	1
005	12.11004.00	ROTATIVE BEACON WIRING HARNESS	1

11. ELECTRIC INSTALLATION

FRONT LIGHTING

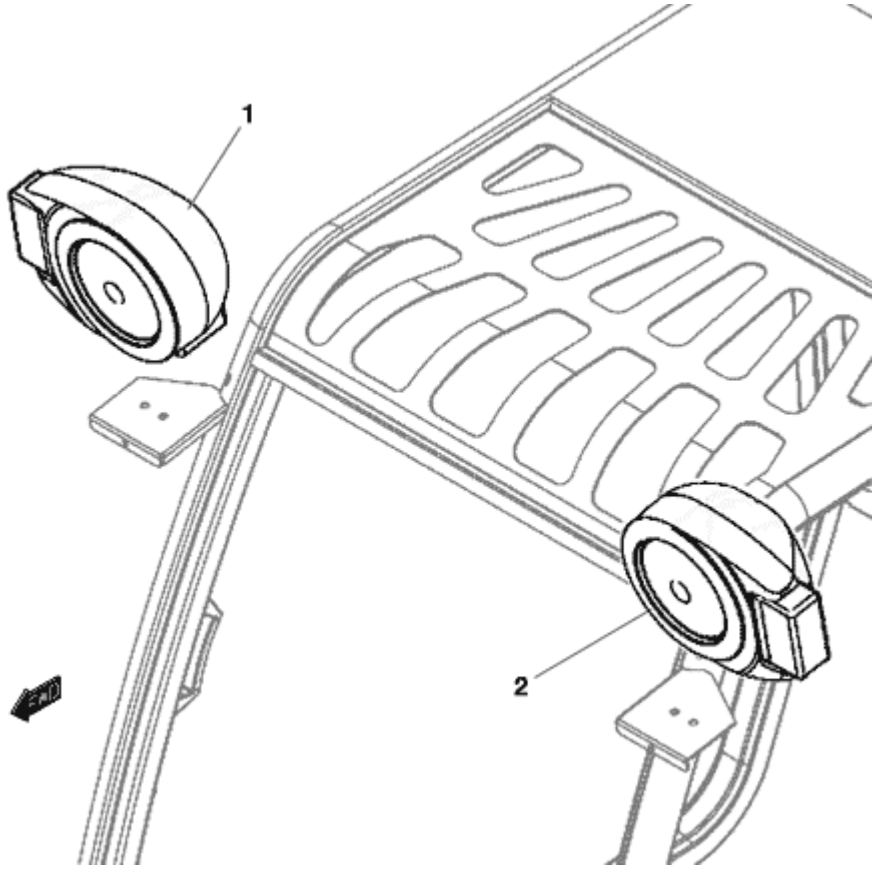

FIGURE	REFERENCE	DENOMINATION	AMOUNT
001	46.11061.00	RIGHT FRONT LIGHT	1
002	46.11062.00	LEFT FRONT LIGHT	1

11. ELECTRIC INSTALLATION

REAR LIGHTING

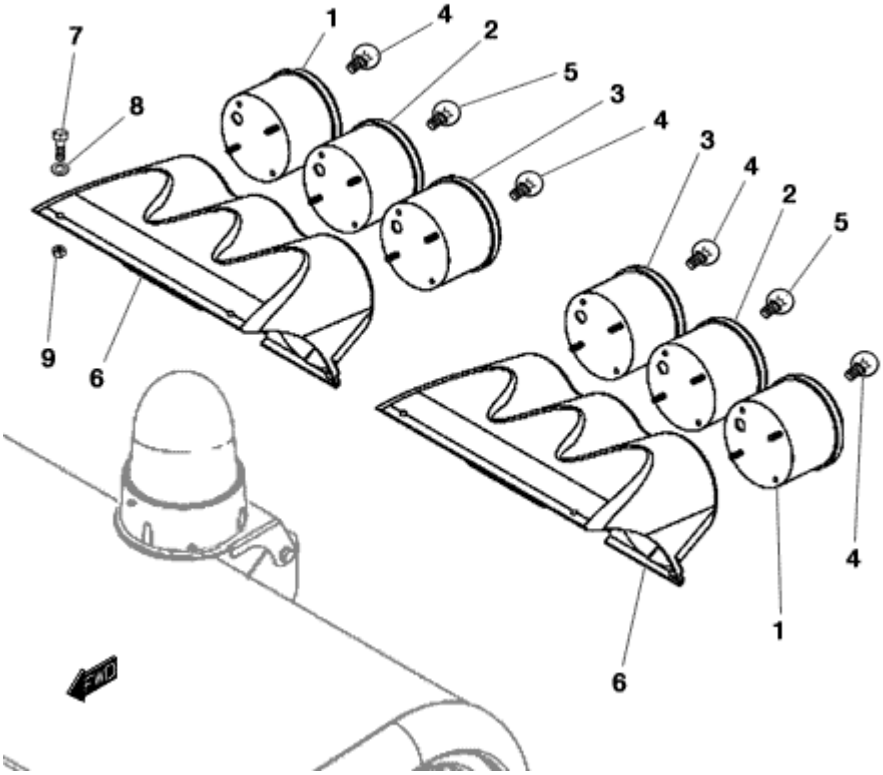

FIGURE	REFERENCE	DENOMINATION	AMOUNT
001	13.11119.00	REAR INTERMITENT PILOT	2
002	13.11118.00	BRAKE LIGHT PILOT	2
003	13.11120.00	REVERSE PILOT	2
004	31.01329.00	LAMP 12V 21W	4
005	31.01331.00	LAMP 12V 21W/5W	2
006	12.11001.01	LIGHTS FIXING SUPPORT 145X198X318	2
007	630.06020.96	SCREW ISO7380 M6x20	8
008	104.06000.00	WASHER DIN7980 D6	8
009	101.06000.66	WASHER DIN125 D6	8

12. FINISHES

STICKERS & PLATES (PART 1)

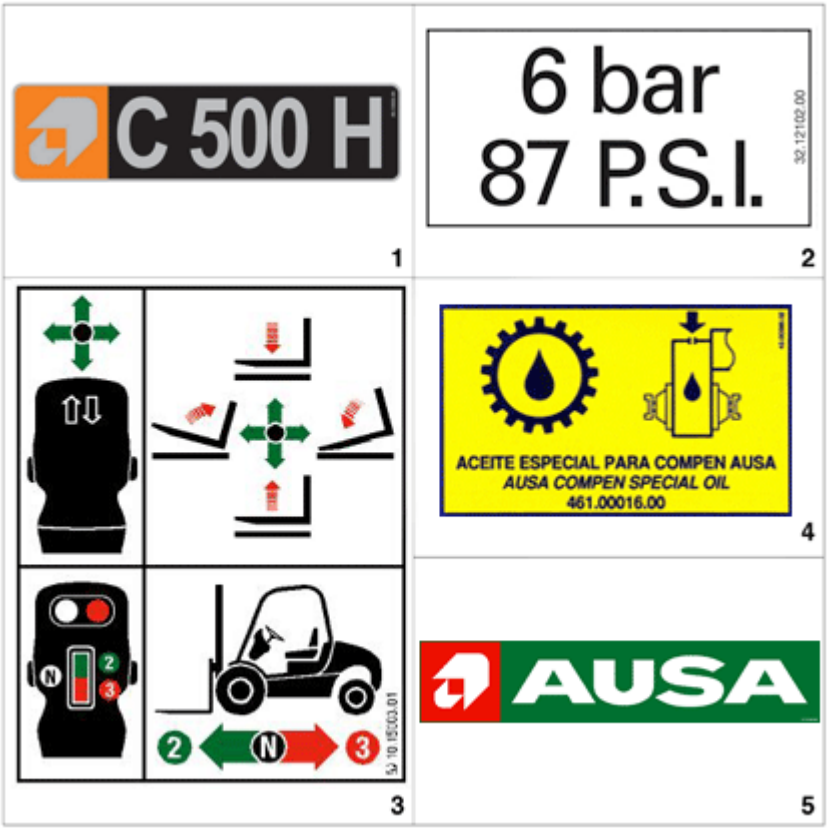

FIGURE	REFERENCE	DENOMINATION	AMOUNT
001	30.12002.01		2
002	32.12102.00	ADH. IND. PLATE 6 BAR 87 PSI	2
003	10.15003.01	PLATE AD. INDI	1
004	01.12108.00	PRESSURE IND. ADHESIVE 8,5 BAR / 123 PSI	2
005	13.12136.00	ADHESIVE 450x92	4

12. FINISHES

STICKERS & PLATES (PART 2)

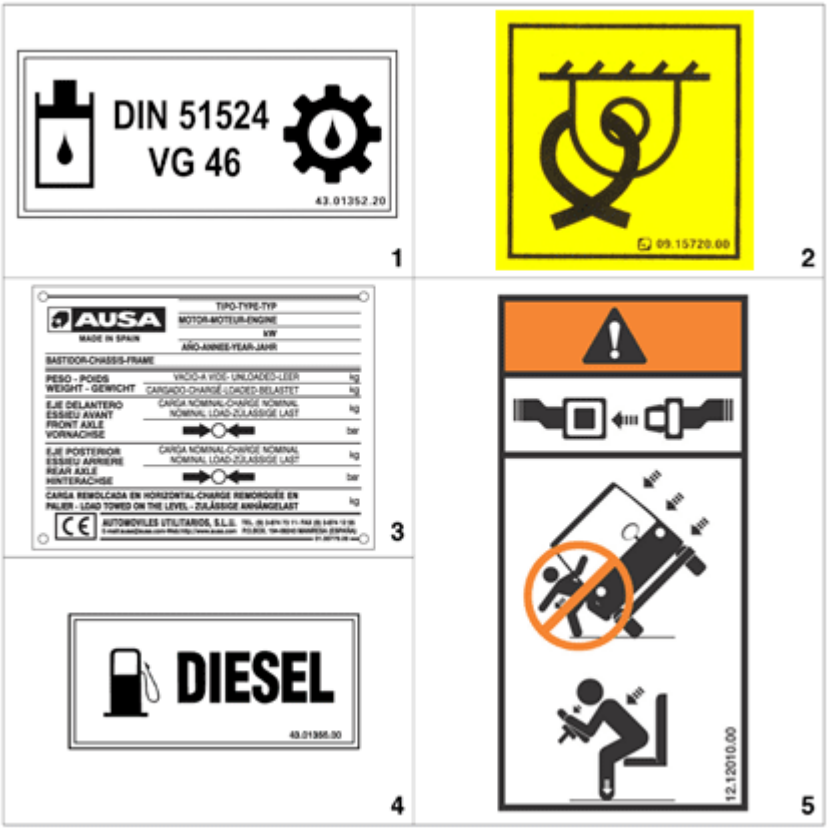

FIGURE	REFERENCE	DENOMINATION	AMOUNT
001	43.01352.20	PLATE AD. INDI	1
002	09.15720.00	PLATE AD. INDI	4
004	43.01356.00	PLATE AD. INDI	1
005	12.12010.00	ADHESIVE	1

12. FINISHES

STICKERS & PLATES (PART 3)

FIGURE	REFERENCE	DENOMINATION	AMOUNT
001	10.15005.01	PLATE AD. INDI	1
002	20.12012.00	PLATE AD. INDI	2
003	43.70780.00	PLATE AD. INDI	1
004	45.19101.00	PLATE AD. INDI	2
005	00.00013.00	ADHESIVE	1
006	01.00757.00	PLATE AD. INDI	1

12. FINISHES

STICKERS & PLATES (PART 4)

FIGURE	REFERENCE	DENOMINATION	AMOUNT
001	43.01170.02	PLATE AD. INDI	1
002	02.00774.00	PLATE AD. INDI	1
003	58.01353.01	PLATE AD. INDI	2
004	09.12014.00	ADHESIVE	1
005	45.01352.00	PLATE AD. INDI	2

12. FINISHES

STICKERS & PLATES (PART 5)

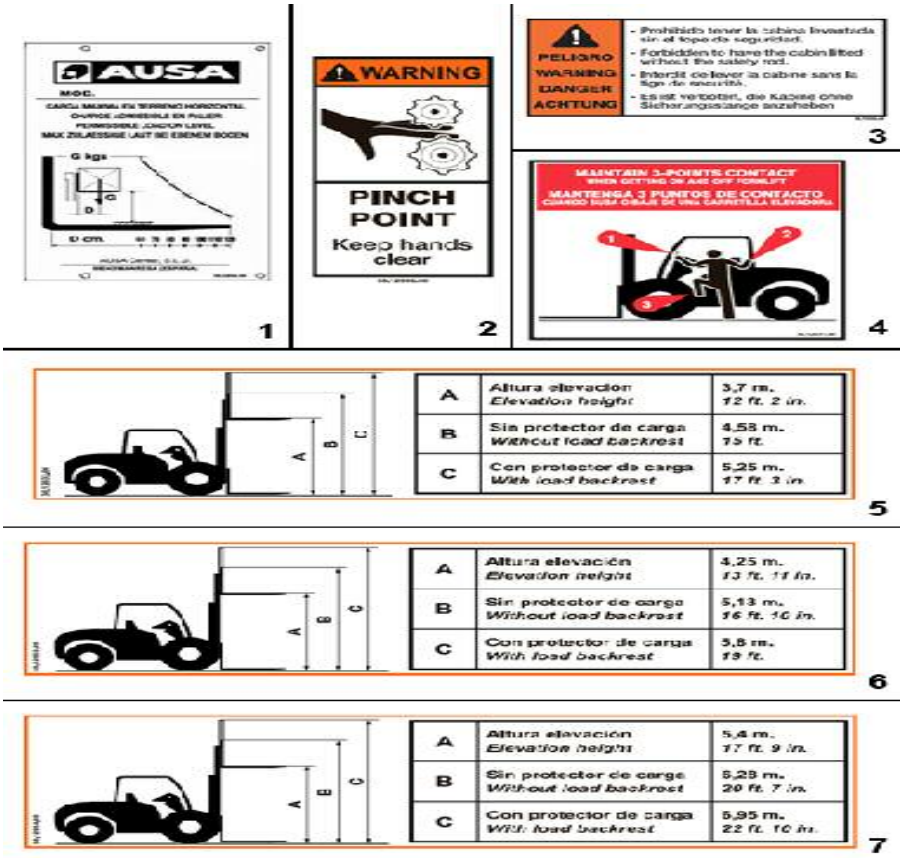

FIGURE	REFERENCE	DENOMINATION	AMOUNT

12. FINISHES

AUSTRALIEN FINISH

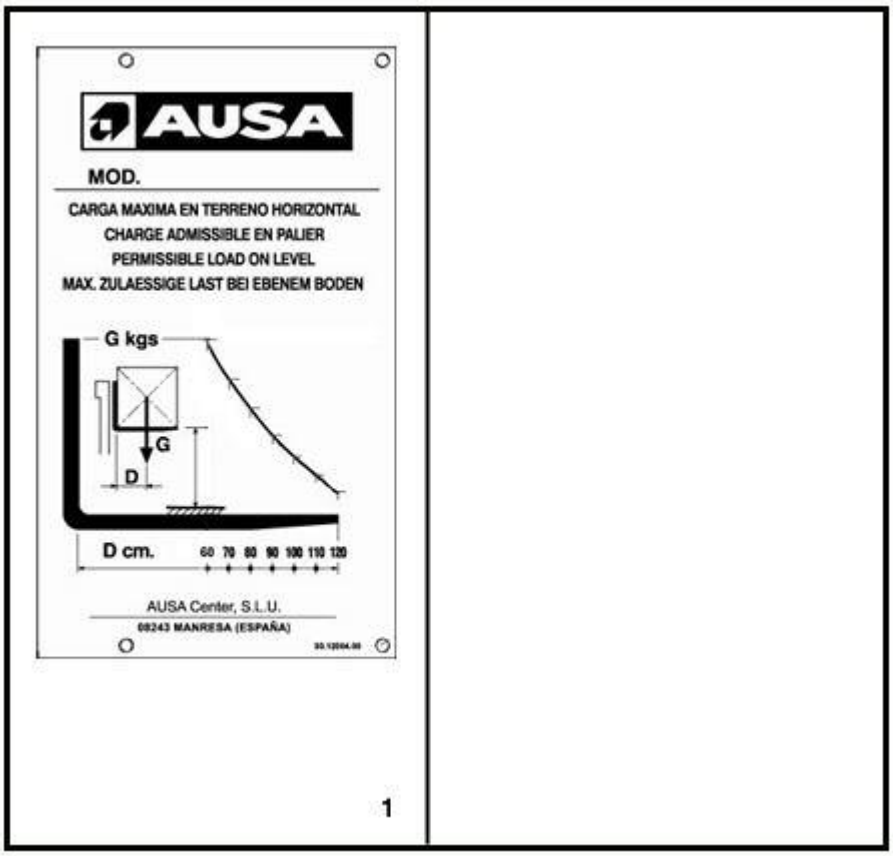

FIGURE	REFERENCE	DENOMINATION	AMOUNT
001	30.12004.00	PLATE - CONTACT WITH AUSA	1

12. FINISHES

FINISHED FRANCE

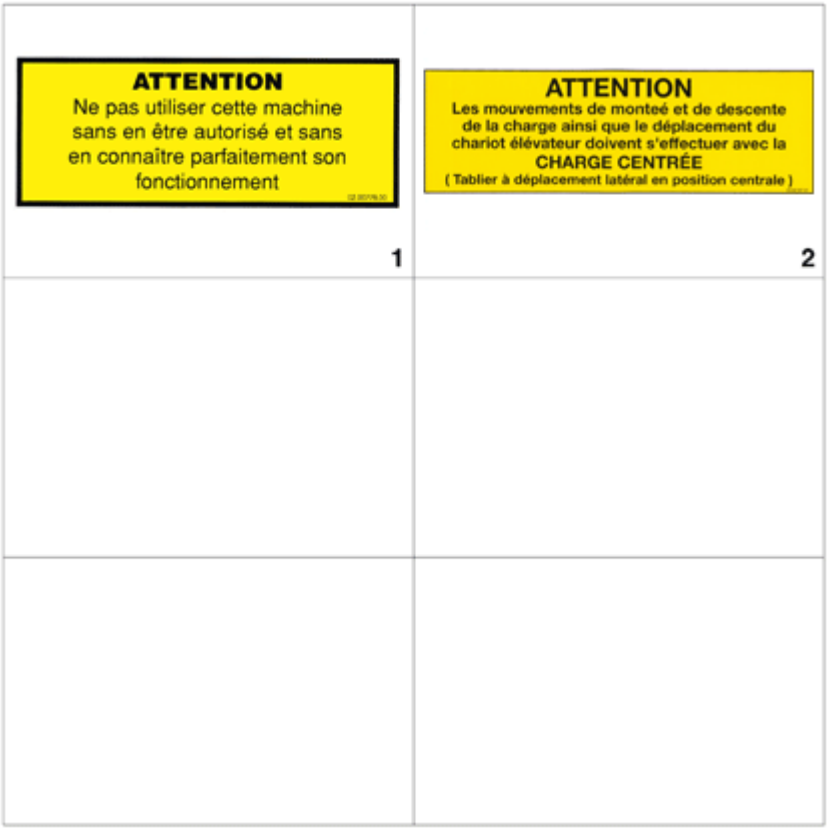

FIGURE	REFERENCE	DENOMINATION	AMOUNT
001	02.00778.00	PLATE AD. INDI	1
002	43.02187.01	PLATE AD. INDI	1

12. FINISHES

FINISHED UK

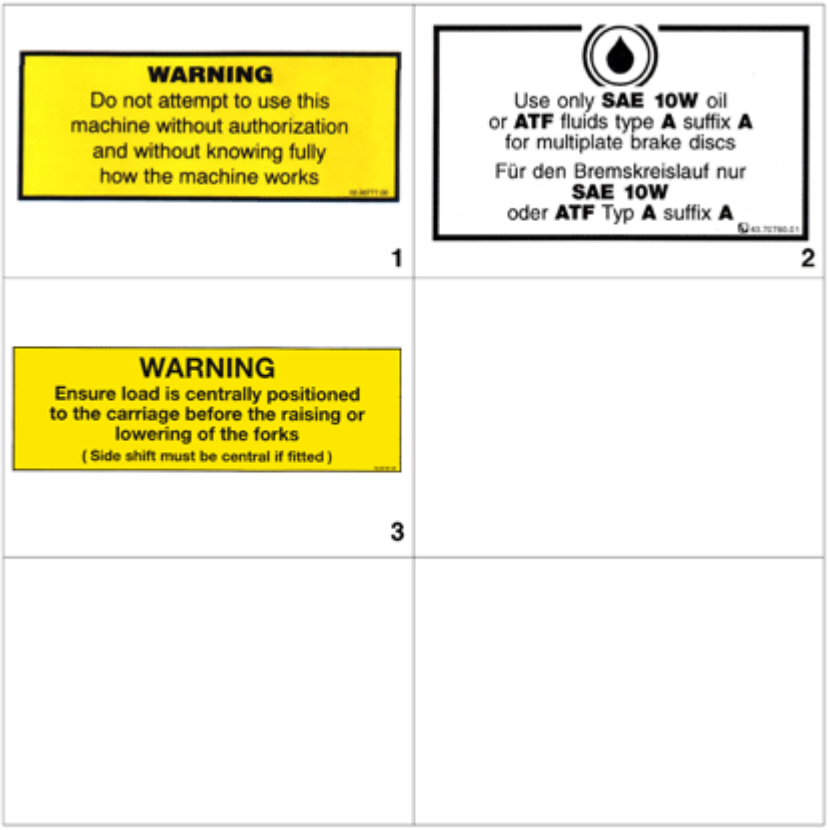

FIGURE	REFERENCE	DENOMINATION	AMOUNT
001	02.00777.00	PLATE AD. INDI	1
002	43.70780.01	PLATE AD. INDI	1
003	43.02187.02	PLATE AD. INDI	1

12. FINISHES

FINISHED GERMANY

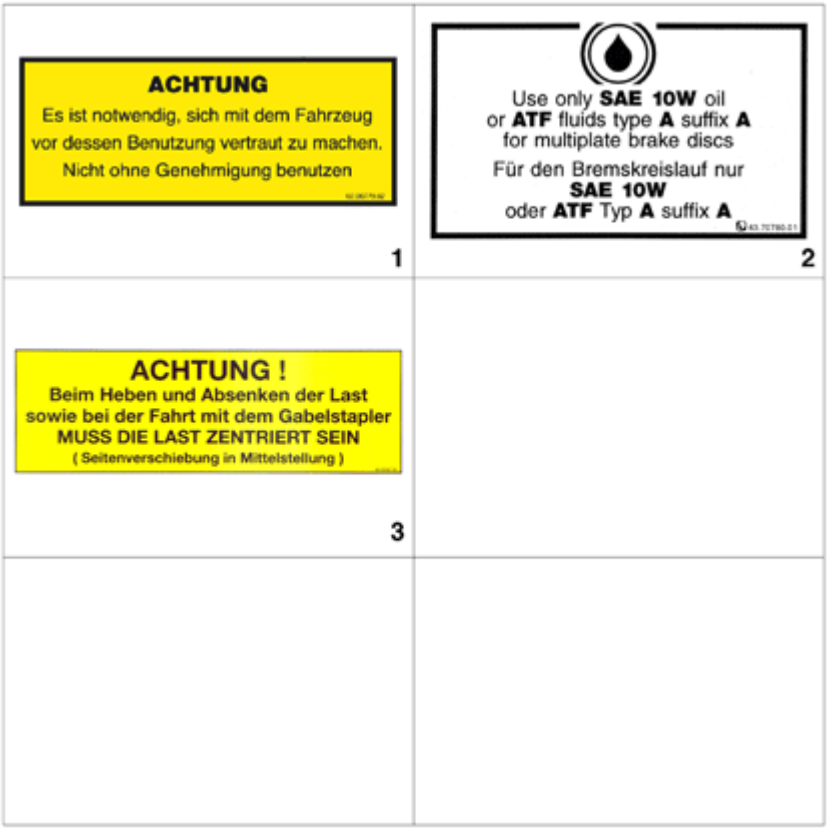

FIGURE	REFERENCE	DENOMINATION	AMOUNT
001	02.00779.02	PLATE AD. INDI	1
002	43.70780.01	PLATE AD. INDI	1
003	43.02187.03	PLATE AD. INDI	1

12. FINISHES

FINISHED POLAND

FIGURE	REFERENCE	DENOMINATION	AMOUNT
001	02.00774.03	AD. INDI. PLATE 50X120 PL.	1
002	43.70780.04	AD. INDI. PLATE 60X100 FRENO	1
003	43.02187.07	AD. INDI. PLATE 70X210 POLSKI	1
004	43.01170.04	AD. INDI. PLATE 90X45 POLSKI	1
005	01.00779.22	PLATE - CONTACT WITH AUSA	1
006	02.00765.02	ADH. PLATE 40X80	1

12. FINISHES
TOOLS BAG

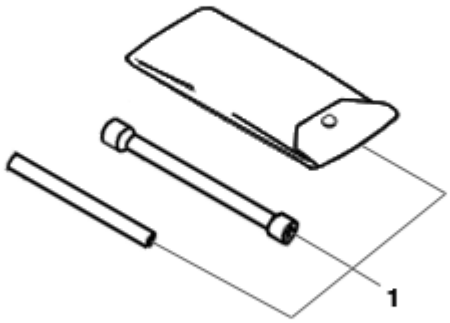

FIGURE	REFERENCE	DENOMINATION	AMOUNT
001	30.12010.00	TOOLS BAG 3 KEYS	1

OPTION AND VARIANTS

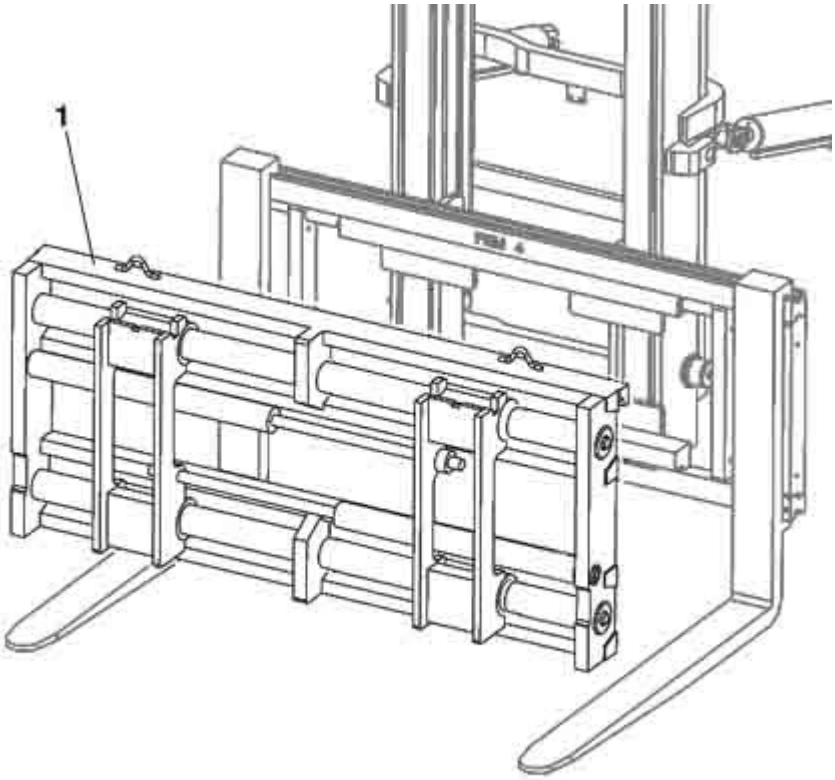

FIGURE	REFERENCE	DENOMINATION	AMOUNT
001	30.13151.00	WELDING POSITIONER FEM4	1
001	30.13151.00	WELDING POSITIONER FEM4	1
001	30.13151.00	WELDING POSITIONER FEM4	1
001	30.13151.00	WELDING POSITIONER FEM4	1

OPTION AND VARIANTS
BUCKET

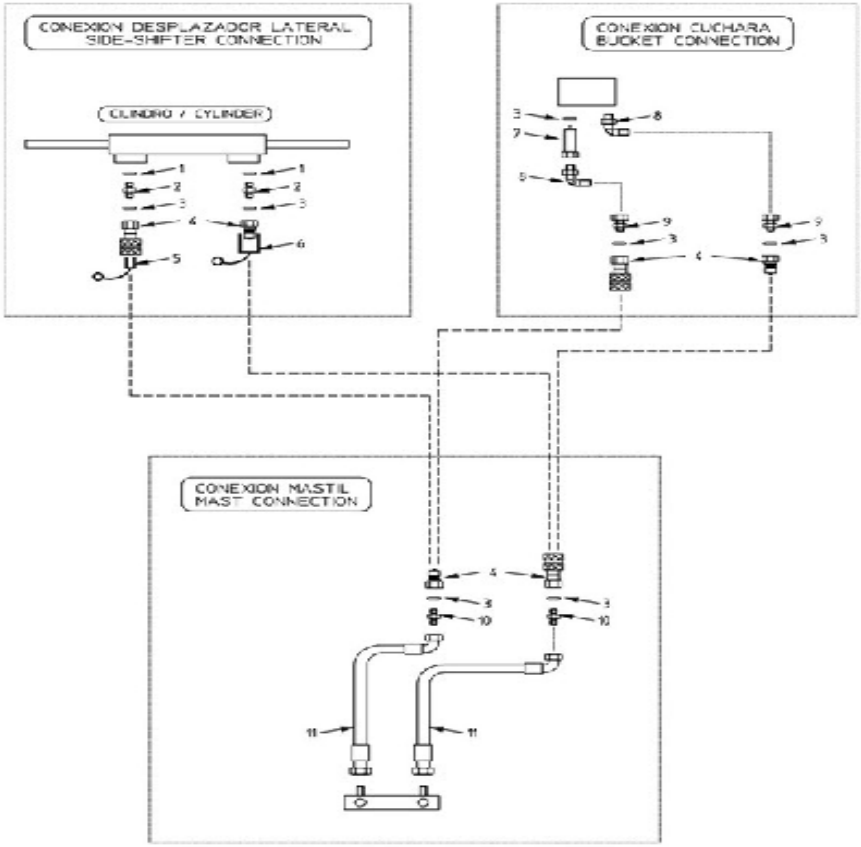

FIGURE	REFERENCE	DENOMINATION	AMOUNT
001	28.00341.00	METALLIC GASKET BUNA D1/4	2
002	19.00720.00	NIPPLE M/M	2
003	08.00317.00	METALLIC GASKET BUNA D3/8	7
004	16.01396.01	VALVE	3
005	43.50125.00	CAP	1
006	43.50124.00	CAP	1
007	08.00312.00	NIPPLE M/H	1
008	20.10266.00	NIPPLE	2
011	30.10346.00	TUBE R2T3/8 550 C90-TL M16	2

13. ACCESSORIES

HALF-CLOSED CABIN

FIGURE	REFERENCE	DENOMINATION	AMOUNT
000	30.80005AC00	OPEN CABIN - SEMICLOSED CABIN C400/500H	1

13. ACCESSORIES

HALF-CLOSED CAB (1)

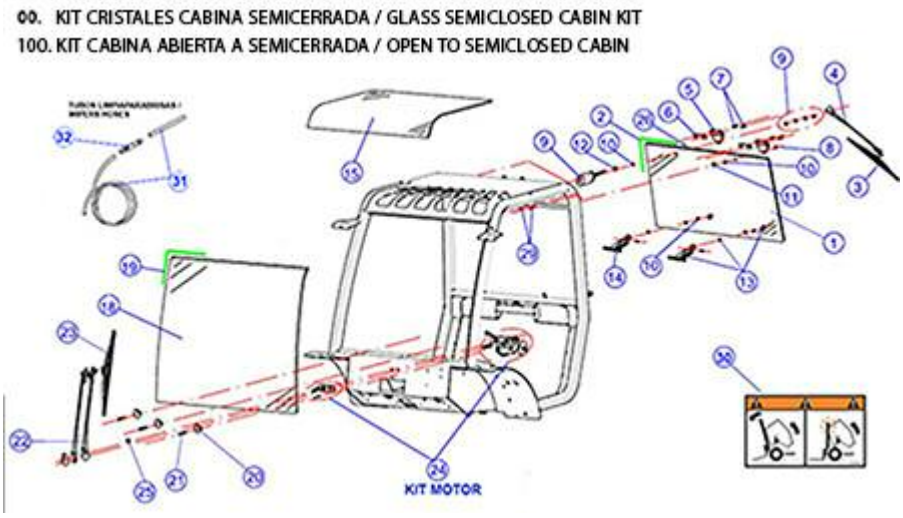

FIGURE	REFERENCE	DENOMINATION	AMOUNT
000	57.08007.00	OPENED CAB TO HALF-CLOSED CAB KIT	1
001	MA.20075.00	REAR CAB GLASS	1
002	MA.20050.00	RUBBER PROFILE	1
003	MA.10031.00	WINDSCREEN WIPER BLADE	1
004	MA.20023.00	WINDSCREEN WIPER ARM	1
005	MA.10006.00	GLASS HINGE	2
006	MA.20020.00	PANEL	2
007	MA.20018.00	SCREW ISO7380	4
008	618.08020.86	SCREW DIN7991 M8x20	1
009	MA.20022.00	MOTOR WINDSCREEN WIPER	1
010	MA.10050.00	RUBBER WASHER 20X40	4
011	MA.10027.00	INSERTED NUT M8	1
012	MA.20021.00	ACC. FORK	1
013	MA.20051.00	HINGE	2
014	402.05014.00	PIN	2
015	MA.20076.00	CABIN GLASS	1
018	MA.20077.00	FRONT GLASS CAB	1
019	MA.20055.00	SEAL DOOR L=5M	1
020	MA.10029.00	CAP	3
021	MA.10065.00	SCREW DIN7604	3
022	MA.20078.00	FRONT WINDSCREEN WIPER ARM	1
023	MA.20079.00	WINDSCREEN WIPER BLADE	1
024	MA.20080.00	SCREEN WIPERS ENGINE	1
025	MA.10025.00	CABLE GROMMET	1
027	MA.10033.00	VALVE	1
028	MA.10034.00	HOSE TRANS. PLAS	1
029	MA.20019.00	SCREW DIN7984	4

030	57.12010.00	PLATE AD. INDI	1
031	MA.10034.00	HOSE TRANS. PLAS	5
032	MA.10033.00	VALVE	1
100	30.80005AC00	OPEN CABIN - SEMICLOSED CABIN C400/500H	1

13. ACCESSORIES

HALF-CLOSED CAB (2)

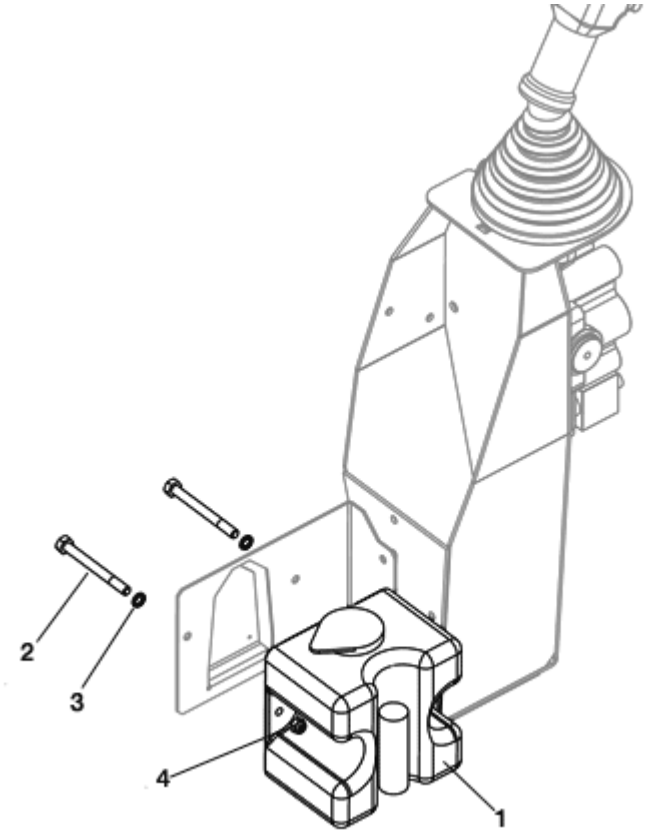

FIGURE	REFERENCE	DENOMINATION	AMOUNT
001	46.08621.00	SCREEN WIPER PUMP TANK	1
002	603.06020.86	SCREW DIN933 M6x20	4
003	101.06000.66	WASHER DIN125 D6	4
004	711.06000.66	NUT DIN982 M6	4

13. ACCESSORIES

HALF-CLOSED CAB (4)

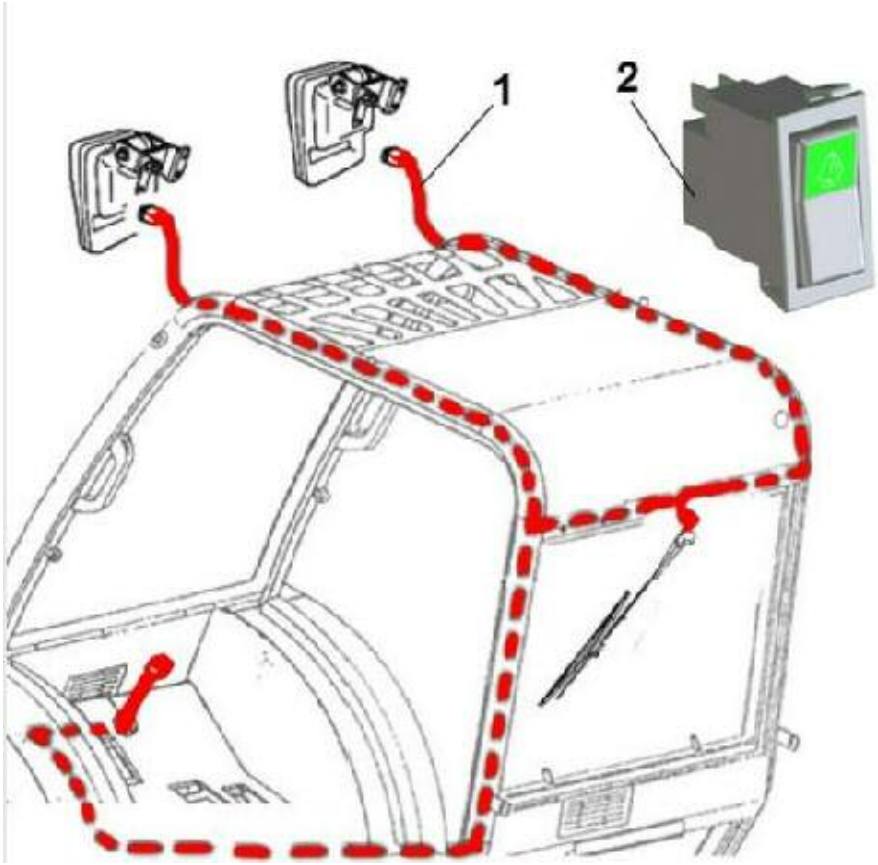

FIGURE	REFERENCE	DENOMINATION	AMOUNT
001	12.11009.00	WINDSCREEN WIPER ELECTRICAL LENGTH	0
002	12.11014.00	SWITCH	1

13. ACCESSORIES

CLOSED CABIN

FIGURE	REFERENCE	DENOMINATION	AMOUNT
000	30.80006AC00	SEMICLOSE CABIN - CLOSE CABIN C400/500H	1

13. ACCESSORIES

CLOSED CABIN (1)

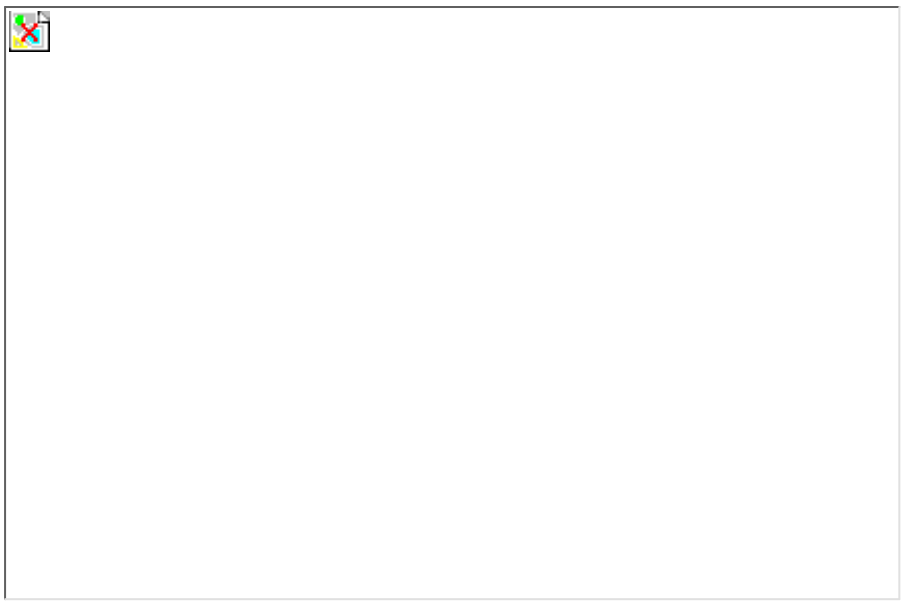

FIGURE	REFERENCE	DENOMINATION	AMOUNT
000	12.08008.00	HALF-CLOSED CAB TO CLOSED CAB KIT	1
001L	MA.20059.00	LEFT DOOR GLASS	1
001R	MA.20060.00	RIGHT DOOR GLASS	1
002	MA.20055.00	SEAL DOOR L=5M	2
003	MA.10015.00	AXLE CIL/CPL	2
004	113.12000.66	WASHER	2
005	MA.20029.00	PROTECTOR	2
006	MA.10054.00	JUNTA GOMA REC. BISAGRA	8
007	MA.20033.00	PLANCHA BRIDA BISAGRA	4
008	MA.10010.00	WASHER	8
009	603.08020.86	SCREW DIN933 M8x20	8
010	MA.20056.00	HINGE	4
011	MA.20057.00	HINGE	4
012	MA.20058.00	PIN HINGE	4
013	901.06000.33	GREASER DIN71412-A	4
014L	MA.20082.00	LEFT HAND CENTRAL CROSSMEMBER	1
014R	MA.20083.00	RIGHT HAND CENTRAL CROSSMEMBER	1
015	MA.20028.00	SUPLEMENTO PILAR	2
016L	MA.20027.00	PROTECTOR	1
016R	MA.20036.00	PROTECTOR	1
017	630.08020.96	SCREW ISO7380	8
018L	MA.10045.00	LEFT EXTERIOR LOCK WITH KEY	1
018R	MA.10046.00	HANDEL RIGHT SIDE WITHOUT KEY	1
019	MA.10051.00	RUBBER GASKET	2
020	MA.10052.00	RUBBER GASKET	2

021	MA.10053.00	RUBBER GASKET	2
022L	MA.20084.00	LEFT KNOB DOOR	1
022R	MA.20085.00	RIGHT KNOB DOOR	1
023	MA.10050.00	RUBBER WASHER 20X40	4
024	MA.10027.00	INSERTED NUT M8	2
025L	MA.10016.00	DOOR HANDLE LEFT	1
025R	MA.10017.00	LOCK RIGHT	1
026	MA.20059.01	SCREW DIN7991 M8X40	4
027	720.08000.66	NUT DIN985 M8 AUTOLOCKING	4
028	MA.10009.00	WASHER DIN9021 6X18X1,5	2
029	603.06025.86	SCREW DIN933 M6x25	2

13. ACCESSORIES

CLOSED CABIN (1)

FIGURE	REFERENCE	DENOMINATION	AMOUNT
030L	MA.20034.00	LEFT GLASS	1
030R	MA.20039.00	RIGHT GLASS	1
031	MA.20050.00	RUBBER PROFILE	2
032	MA.10029.00	CAP	12
033	MA.10065.00	SCREW DIN7604	12
034	MA.20044.00	FIXATION DOOR KIT	2
035	711.06000.66	NUT DIN982 M6	2
036	MA.20042.00	AIR FILTER SUPPORT	1
037	MA.20041.00	AIR FILTER	1
038L	MA.20030.00	COMPLETE LEFT DOOR ASSY	1
038R	MA.20037.00	COMPLETE RIGHT DOOR	1
200	30.80006AC00	SEMICLOSE CABIN - CLOSE CABIN C400/500H	1

13. ACCESSORIES
CLOSED CABIN (2)

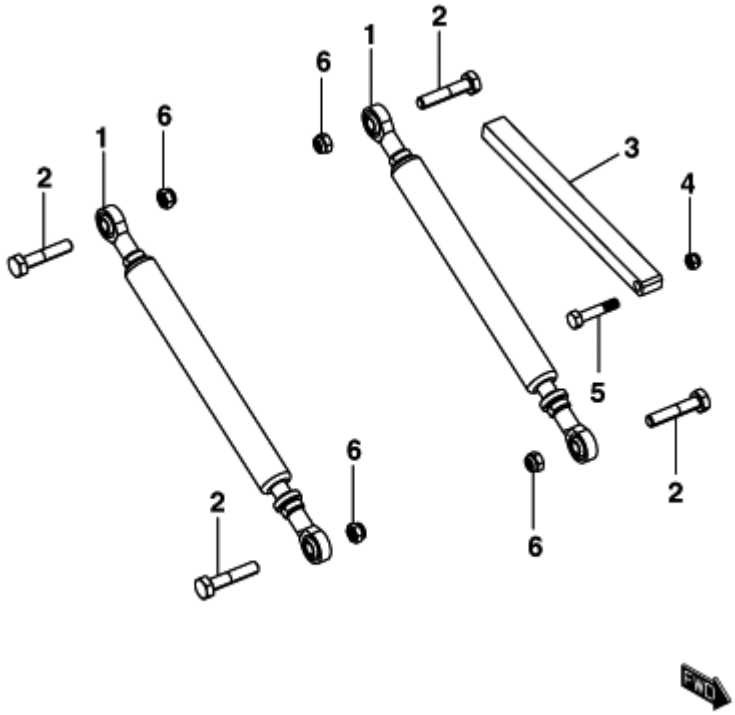

FIGURE	REFERENCE	DENOMINATION	AMOUNT
001	30.08040.00	GAS SPRING 40X462 2800N	2
002	604.10050.86	BOLT DIN931 M10x50	4
003	12.04035.03	SECURITY SUPPORT	1
004	711.08000.66	NUT DIN982 M8	1
005	604.08040.86	SCREW DIN931	1
006	711.10000.66	SHOCK ABSORBER	4

13. ACCESSORIES
CLOSED CABIN (3)

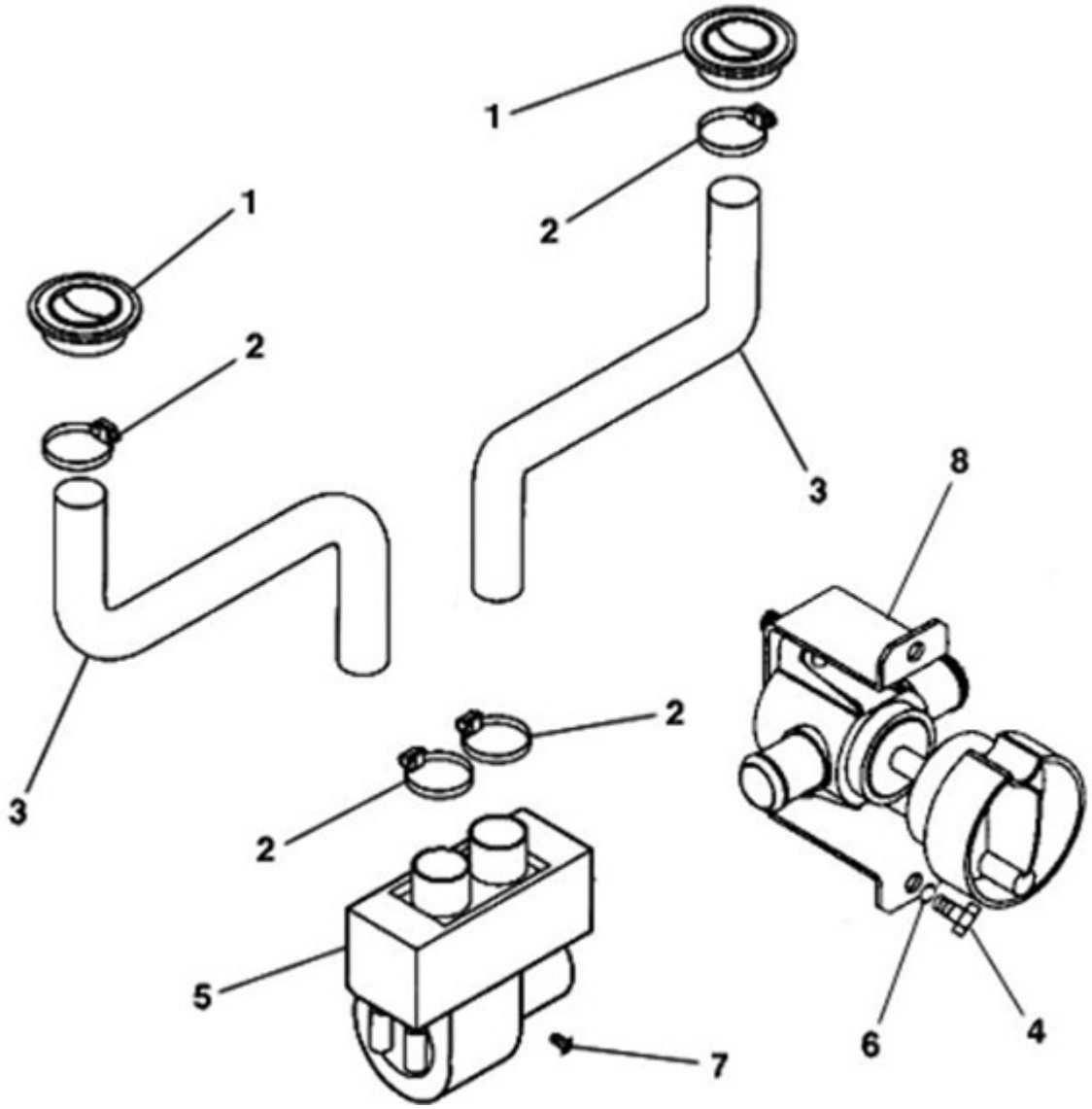

FIGURE	REFERENCE	DENOMINATION	AMOUNT
001	46.00368.00	AIR DIFFUSER	2
002	912.40060.66	CLAMP D40-60	4
003	43.70009RE00	ADMISSION TUBE 45x49x500, AIR	2
004	630.05020.96	SCREW ISO7380	2
005	46.00370.00	HEATER	1
006	104.05000.00	WASHER DIN7980 D5	2
007	623.55016.86	SCREW DIN7971	2
008	46.00369.00	BALL VALVE D11	1
009	10.14003.00	FASTON CONNECTOR 3 WAYS FEMALE	1
010	806.06030.00	FASTON MALE 6.3MM	3
011	10.01360.00	TUBO GOMA B/P 15x25x880	1

13. ACCESSORIES
CLOSED CABIN (4)

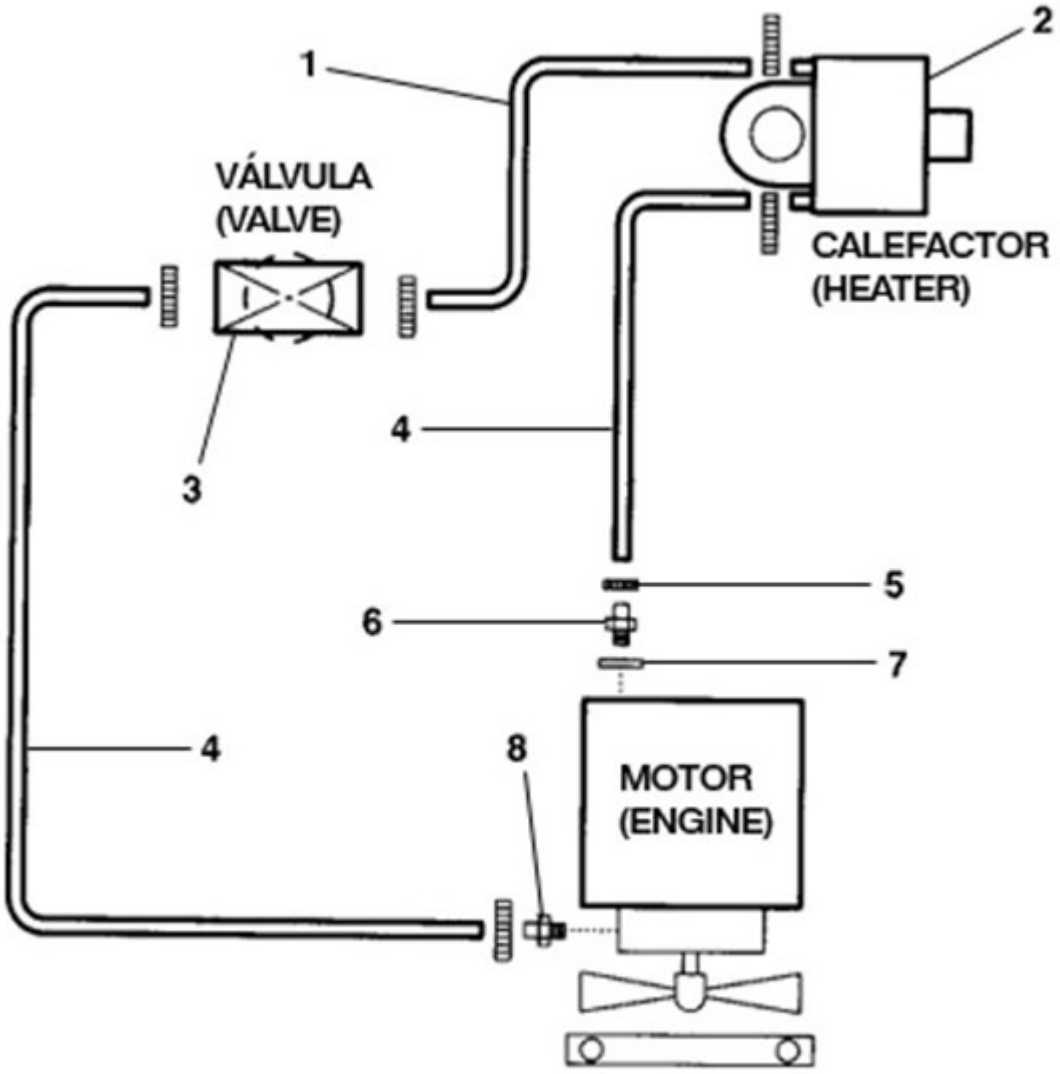

FIGURE	REFERENCE	DENOMINATION	AMOUNT
002	46.00370.00	HEATER	1
003	46.00369.00	BALL VALVE D11	1
004	43.11005.00		2
005	912.20032.00	CLAMP	2
006	08.00301.02	NIPPLE M/TB	1
007	08.00317.00	METALLIC GASKET BUNA D3/8	1
008	46.20110.00		1

13. ACCESSORIES
CLOSED CABIN (5)

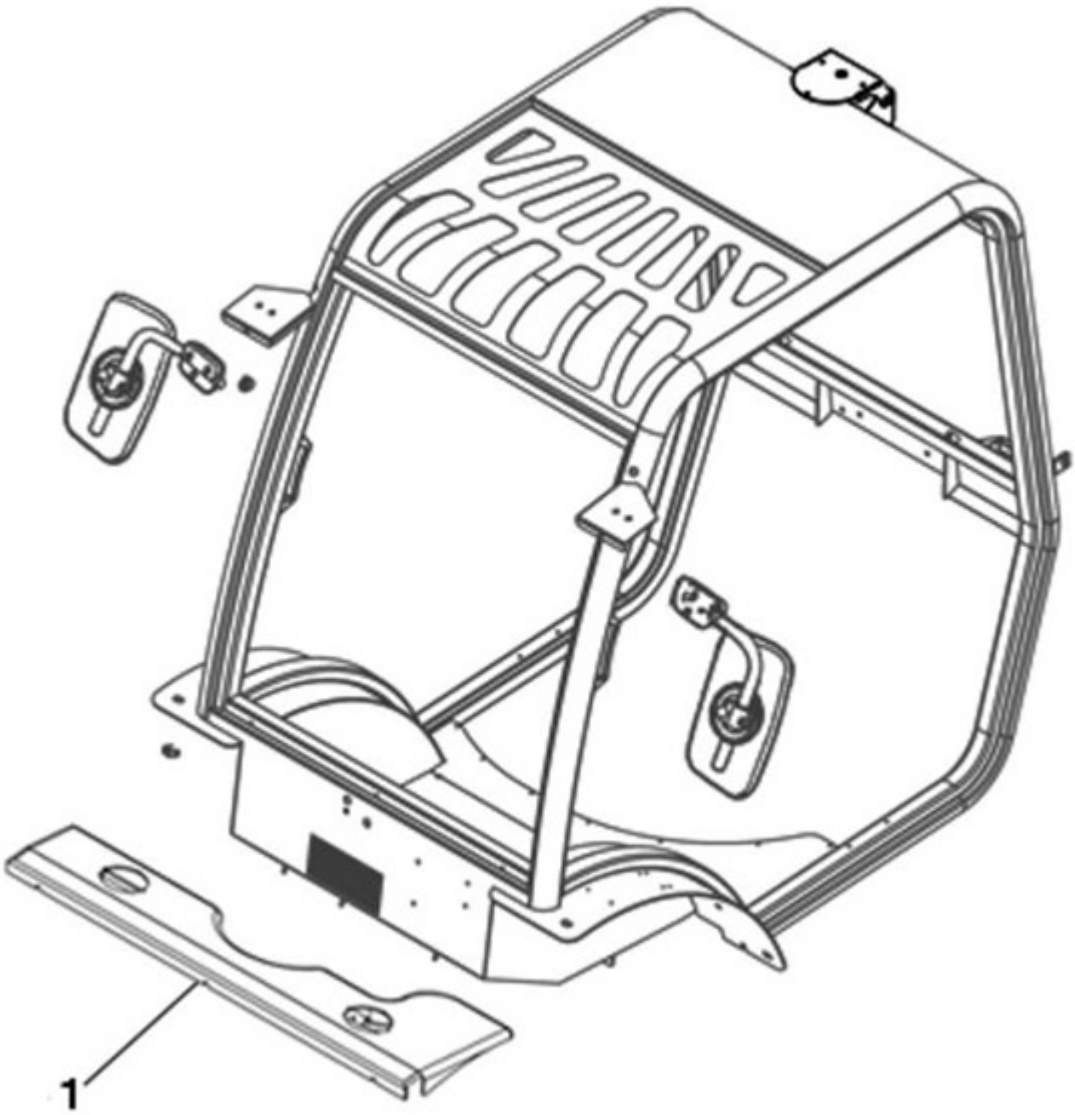

FIGURE	REFERENCE	DENOMINATION	AMOUNT
001	57.08009.00	COVER SOP. TABLIER 108X163X986	1

INDEX

00. MAINTENANCE

Filters kit 2

02. ENGINE

ENGINE (I) 3
ENGINE (I) - 60884 4
ENGINE (I) - 66379 5
ENGINE (II) 6
ENGINE (II) - 60884 7
Pump coupling 8
Pump coupling - 72869 9
Pompe 10
EXHAUST PIPE 11
Air filter comp. 12
Fuel tank 13
DELIVERY 14
Accelerator pedal 15
RADIATOR 16
RADIATOR - 76536 17
engine supports 18
engine supports - 61308 19
engine supports - 65357 20

03. TRANSMISSION

GEARBOX 21
Transmission support 22
Reduction box inner (Part 1) 23
Reducer box inner (Part 2) 24
Inching pedal 26
Cardan Joint 28

Transmission (Front axle)

Front axle 29
Carter différentiel 30
Ring & pinion 31
Differential 33
Reduction 34
Brake 36

Transmission (Rear axle)

Rear axle 38
Rear axle (PART 1) 39
Rear axle (PART 2) 40
Rear axle (Part 3) 42
Rear axle (Part 3) - 67458 44
Rear axle (Part 3) - 72188 46
Rear axle (Part 3) - 75067 48
Steering cylinder mounting 49
Steering cylinder mounting - 72188 50

04. CHASSIS

Chassis 51
mast bush 52

BRAKE ACTIVATION

FOOT BRAKE 53
TANK 55

06. STEERING

Direction Column 56
Steering (Part 1) 57
Steering (Part 2) 58
Steering (Part 4) 59

07. WHEELS

FRONT WHEELS 60
REAR WHEELS 61

08. BODYWORK

Engine cover 62
Engine cover - 76536 63
Front sheets 64
Engine Protector 65
Engine Protector - 76536 66
Cab shutter 67
Cab shutter - 76536 69
SEAT 70
SEAT - 69383 71
Protecteur moteur 72
Protecteur moteur - 67347 73

Cabin supports 74
COUNTERWEIGHT 75

OPEN CABIN
Opened cab (Part 1) 76
Opened cab (Part 2) 77
Opened cab (Part 3) 78
Rear view mirrors 79

08. BODYWORK
CARPET 80

CABIN
OPEN COCKPIT - SEMICLOSED COCKPIT 81

CLOSED CABIN
SEMICLOSE COCKPIT - CLOSE COCKPIT 82

DUPLEX MAST 3.7M (FEM IV)
Mast guides 84
Carriage subjection 86
Auxiliary reeving 87
Carriage 88
Lateral displacement 89
Lateral cylinder 90

DUPLEX MAST 4.5M (FEM IV)
Mast guides 91
Carriage subjection 93
Auxiliary reeving 94
Carriage 95
Lateral displacement 96
Lateral cylinder 97

TRIPLEX MAST 4.25M (FEM IV)
Mast guides 98
Carriage subjection 100
Auxiliary reeving 101
Carriage 102
Lateral displacement 103
Lateral cylinder 104

Free lift cylinder 105

TRIPLEX MAST 6.8M (FEM IV)

Mast guides 106
Carriage subjection 108
Auxiliary reeving 109
Carriage 110
Lateral displacement 111
Lateral cylinder 112
Free lift cylinder 113

09. MACHINE FUNCTIONS IMPLEMENTS

Inclination cylinder 114
Inclination cylinder - 66414 115
Forks 116

13. ACCESSORIES

LOAD PROTECTOR 1600MM 117
LOAD PROTECTOR 1600MM - 75744 118

09. MACHINE FUNCTIONS IMPLEMENTS

Bucket 119

10. HYDRAULIC INSTALLATION

Distributor 120
Distributor - 74297 121
Hydraulic tank 122
Line filters 124
Transmission diagram 125
Transmission diagram - 76536 127
Service diagram 129
Service diagram - 76536 131
Valves 133

11. ELECTRIC INSTALLATION

JOYSTICK 134
BATTERY 135
Battery support 136
Cable Installation 137
ELECTRICAL CONNECTION (GENERAL SECTION) 138
Engine wiring harness 139

Lights wiring harness 140
Front lighting 141
Rear lighting 142

12. FINISHES
STICKERS & PLATES (PART 1) 143
STICKERS & PLATES (PART 2) 144
STICKERS & PLATES (PART 3) 145
STICKERS & PLATES (PART 4) 146
STICKERS & PLATES (PART 5) 147
AUSTRALIEN FINISH 148
Finished France 149
Finished UK 150
Finished Germany 151
Finished Poland 152
Tools bag 153

Option and variants
154
Bucket 155

13. ACCESSORIES
HALF-CLOSED CABIN 156
HALF-CLOSED CAB (1) 157
HALF-CLOSED CAB (2) 158
HALF-CLOSED CAB (4) 159
CLOSED CABIN 160
CLOSED CABIN (1) 161
CLOSED CABIN (2) 163
CLOSED CABIN (3) 164
CLOSED CABIN (4) 165
CLOSED CABIN (5) 166