YANMAR

PARTS CATALOG

0CR10-M78700EN

Last update Mar., 2013

PREFACE

1. This parts catalog is the 1st edition of 3TNV70-DPE for Dingo Mini Diggers Pty Ltd.

Pub.No. : 0CR10-G78700
Published : April, 2009

2. Model name

Engine model	Vehicle	Vehicle made by
3TNV70-DPE	MINI DIGGER	Dingo Mini Diggers Pty Ltd.

Contents

0CR10-M78700

Fig. No.	Fig. Name	Fig. No.	Fig. Name
3TNV70-DPE			
1.	CYLINDER BLOCK		
2.	GEAR HOUSING		
3.	FLYWHEEL HOUSING & OIL SUMP		
4.	CYLINDER HEAD & BONNET		
5.	EXHAUST MANIFOLD		
6.	CAMSHAFT & DRIVING GEAR		
7.	CRANKSHAFT & PISTON		
8.	LUB.OIL SYSTEM		
9.	COOLING WATER SYSTEM		
10.	FUEL INJECTION PUMP		
11.	GOVERNOR		
12.	FUEL INJECTION VALVE		
13.	FUEL LINE		
14.	STARTING MOTOR		
15.	GENERATOR		
16.	GASKET SET		

Fig.1. CYLINDER BLOCK

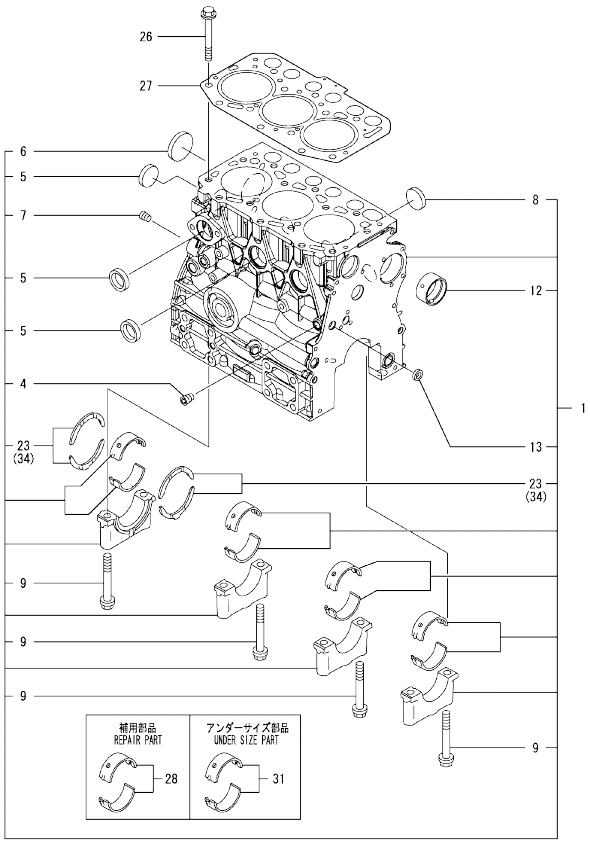

Remarks
(1) REPAIR PART.
(2) UNDER-SIZED(U.S=0.25)PART.
(3) OVER-SIZED(O.S=0.25)PART.

(A)=3TNV70-DPE (D)=
(B)= (E)=
(C)= (F)=

No.	Lev.	Parts No.	Description	Q'ty (A)	(B)	(C)	(D)	(E)	(F)	I	R
1	1	719515-01560	BLOCK ASSY, CYLINDER	1							
4	2	124060-01050	PLUG, PT1/8	1							
5	2	105311-01090	PLUG, 30	4							
6	2	119623-01250	PLUG, 45	1							
7	2	124160-01910	PLUG, PT1/4	1							
8	2	119285-01990	PLUG, 25	3							
9	2	119620-02020	BOLT, METAL CAP	8							
12	2	119717-02411	BUSH, CAMSHAFT	1							
13	2	27241-120000	PLUG, 12	1							
23	2	119717-02930	BEARING, THRUST	2							
26	1	119515-01200	BOLT, HEAD	14							
27	1	119515-01330	GASKET, HEAD	1							
28	1	719717-02901	BEARING, MAIN	4							1
31	1	719717-02911	BEARING, 0.25 US	4							2
34	1	119810-02941	BEARING, THRUST 0.25	2							3

N:Old ←Yes/No→ New. Q:Old ←No/Yes→ New. R:Old ←Yes/Yes→ New. S:Old ←No/No→ New. W:Add. Z:Discontinued. F:Interchangeable by set. K:Q'ty Change

Copyright (C) YANMAR GLOBAL CS CO., LTD. All RightsReserved.

Fig.2. GEAR HOUSING

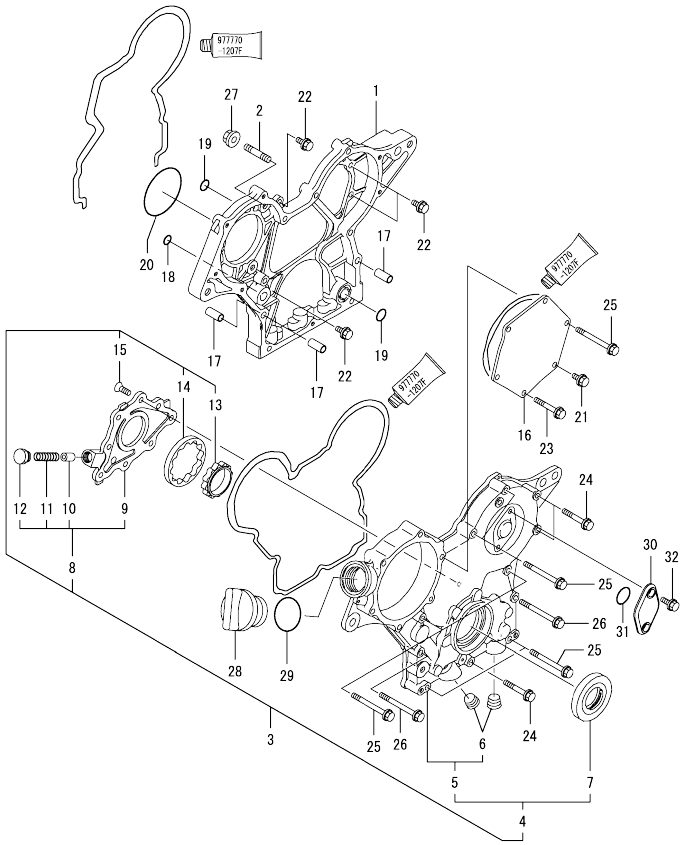

(A)=3TNV70-DPE
(B)=
(C)=
(D)=
(E)=
(F)=

No.	Lev.	Parts No.	Description	Q'ty (A)	(B)	(C)	(D)	(E)	(F)	I	R
1	1	119717-01501	CASE, GEAR	1							
2	1	119717-01570	STUD	3							
3	1	119744-01590	COVER ASSY,GEAR CASE	1							
4	2	719744-01500	COVER ASSY,GEAR CASE	1							
5	3	119744-01521	COVER, GEAR CASE	1							
6	4	23876-030000	PLUG, R03	2							
7	3	119620-01800	SEAL, OIL	1							
8	2	119717-32100	COVER ASSY	1							
9	3	119717-32080	COVER	1							
10	3	129900-32130	VALVE, RELIEF	1							
11	3	129001-32320	SPRING	1							
12	3	129001-32330	PLUG	1							
13	2	119717-32110	ROTOR, INNER	1							
14	2	119717-32120	ROTOR, OUTER	1							
15	2	119802-32130	SCREW, M6X16	8							
16	1	119717-01750	COVER	1							
17	1	119660-01911	PIPE, KNOCK	4							
18	1	119624-32040	O-RING, P12.0	1							
19	1	119717-32050	O-RING, P17.0	3							
20	1	121850-51960	O-RING	1							
21	1	26106-060122	BOLT, M6X 12 PLATED	1							
22	1	26106-060162	BOLT, M6X 16 PLATED	4							
23	1	26106-060402	BOLT, M6X 40 PLATED	4							
24	1	26106-060402	BOLT, M6X 40 PLATED	3							
25	1	26106-060602	BOLT, M6X 60 PLATED	7							
26	1	26106-060652	BOLT, M6X 65 PLATED	2							
27	1	26306-080002	NUT, M8	3							
28	1	124160-01751	COVER, FILLER	1							
29	1	24311-000320	O-RING, 1AP32.0	1							
30	1	121023-01551	COVER	1							
31	1	24341-000240	O-RING, 1AS24.0	1							
32	1	26106-060162	BOLT, M6X 16 PLATED	2							

N:Old ◄Yes/No► New. Q:Old ◄No/Yes► New. R:Old ◄Yes/Yes► New. S:Old ◄No/No► New. W:Add. Z:Discontinued. F:Interchangeable by set. K:Q'ty Change

Copyright (C) YANMAR GLOBAL CS CO., LTD. All RightsReserved.

Fig.3. FLYWHEEL HOUSING & OIL SUMP

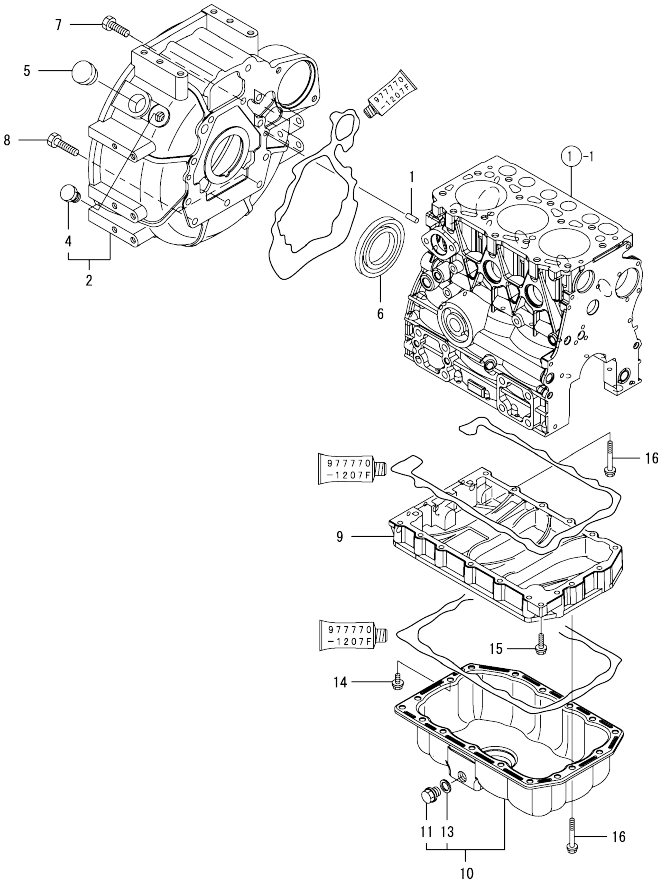

(A)=3TNV70-DPE (D)=
(B)= (E)=
(C)= (F)=

No.	Lev.	Parts No.	Description	Q'ty (A)	(B)	(C)	(D)	(E)	(F)	I	R
1	1	129100-01580	PIN, M8X16	2							
2	1	119717-01611	HOUSING, FLYWHEEL	1							
4	2	129486-35210	PLUG, 3/4-16UNF	1							
5	1	119620-01750	CAP	1							
6	1	124085-02220	SEAL, OIL	1							
7	1	26206-100252	BOLT, M10X 25 PLATED	8							
8	1	26206-100302	BOLT, M10X 30 PLATED	3							
9	1	119515-01720	SPACER, OIL SUMP	1							
10	1	119515-01770	SUMP ASSY, OIL	1							
11	2	105425-01690	PLUG, 16	1							
13	2	22190-160002	WASHER, SEAL 16	1							
14	1	26106-060122	BOLT, M6X 12 PLATED	1							
15	1	26106-060252	BOLT, M6X 25 PLATED	1							
16	1	26106-060452	BOLT, M6X 45 PLATED	17							

N:Old ◄Yes/No► New. Q:Old ◄No/Yes► New. R:Old ◄Yes/Yes► New. S:Old ◄No/No► New. W:Add. Z:Discontinued. F:Interchangeable by set. K:Q'ty Change

Copyright (C) YANMAR GLOBAL CS CO., LTD. All RightsReserved.

Fig.4. CYLINDER HEAD & BONNET

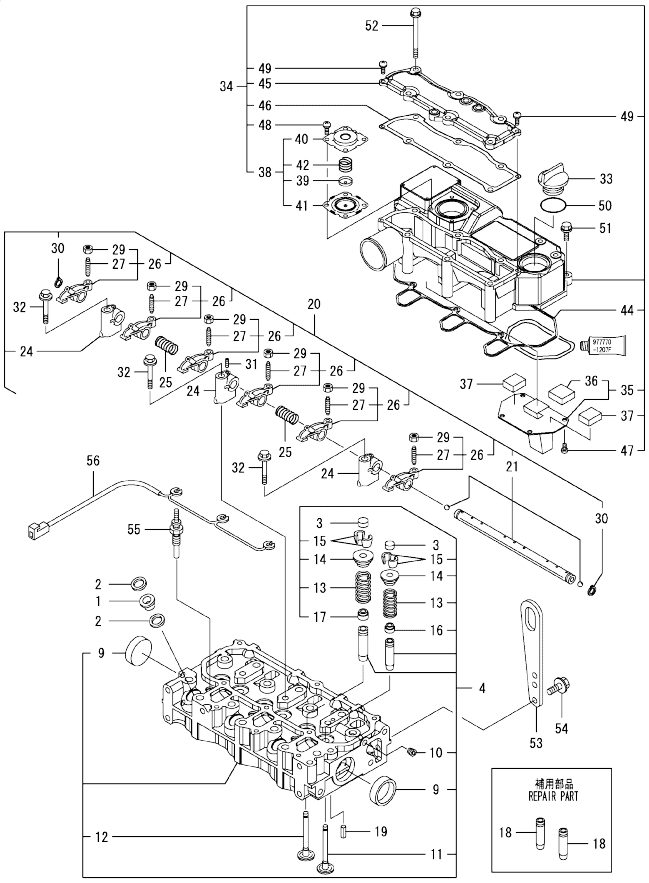

(A)=3TNV70-DPE
(B)=
(C)=
(D)=
(E)=
(F)=

No.	Lev.	Parts No.	Description	Q'ty (A)	(B)	(C)	(D)	(E)	(F)	I	R
1	1	129901-11450	PROTECTOR, NOZZLE	3							
2	1	119600-11460	GASKET, NOZZLE	6							
3	1	105010-11490	CAP, VALVE	6							
4	1	119515-11740	HEAD ASSY, CYLINDER	1							
9	2	119285-11990	PLUG, 35	2							
10	2	23876-005000	PLUG, R005	1							
11	2	119515-11101	VALVE, INTAKE	3							
12	2	119515-11110	VALVE, EXHAUST	3							
13	2	119717-11131	SPRING, VALVE	6							
14	2	129508-11180	RETAINER, SPRING	6							
15	2	119717-11190	COTTER	12							
16	2	119717-11340	SEAL, VALVE STEM	3							
17	2	119717-11350	SEAL, VALVE STEM	3							
18	1	119515-11800	GUIDE, VALVE	6							1
19	1	22351-060012	PIN, SPRING 6.0X12	2							
20	1	119515-11200	SUPPORT ASSY, ARM	1							
21	2	119515-11240	SHAFT ASSY, ROCKER	1							
24	2	119717-11260	SUPPORT, ROCKER ARM	3							
25	2	119515-11280	SPRING	2							
26	2	119717-11650	ARM, ROCKER	6							
27	3	129150-11230	SCREW, VALVE ADJUST	6							
29	3	129150-11750	NUT, M8	6							
30	2	22242-000120	RING, 12	2							
31	2	26979-050162	SCREW, M5X16	1							
32	1	26106-080402	BOLT, M8X 40 PLATED	3							
33	1	124160-01751	COVER, FILLER	1							
34	1	119515-11380	BONNET ASSY, HEAD	1							
35	2	119717-03031	PLATE	1							
36	3	119717-03070	BAFFLE, BREATHER	1							
37	2	119717-03070	BAFFLE, BREATHER	2							
38	2	119802-03100	DIAPHRAGM ASSY	1							
39	3	119802-03110	PLATE	1							
40	3	119802-03121	COVER, DIAPHRAGM	1							
41	3	119802-03131	DIAPHRAGM	1							
42	3	119802-03141	SPRING, DIAPHRAGM	1							
44	2	119515-11310	GASKET, BONNET	1							
45	2	119515-11320	COVER, BONNET	1							
46	2	119515-11330	GASKET	1							
47	2	22857-500100	SCREW, 5X10	4							
48	2	22857-500100	SCREW, 5X10	4							
49	2	22857-500160	SCREW, 5X16	2							
50	1	24311-000320	O-RING, 1AP32.0	1							
51	1	26106-060202	BOLT, M6X 20 PLATED	3							
52	1	26106-060752	BOLT, M6X 75 PLATED	6							
53	1	129900-07900	LIFTER	1							
54	1	26106-080162	BOLT, M8X 16 PLATED	2							
55	1	119717-77800	PLUG, GLOW	3							
56	1	119717-77820	CONNECTOR, GLOW PLUG	1							

Remarks
(1) REPAIR PART.

N:Old $\xleftarrow[\text{No}]{\text{Yes}}$ New. Q:Old $\xleftarrow[\text{Yes}]{\text{No}}$ New. R:Old $\xleftarrow[\text{Yes}]{\text{Yes}}$ New. S:Old $\xleftarrow[\text{No}]{\text{No}}$ New. W:Add. Z:Discontinued. F:Interchangeable by set. K:Q'ty Change

Copyright (C) YANMAR GLOBAL CS CO., LTD. All RightsReserved.

Fig.5. EXHAUST MANIFOLD

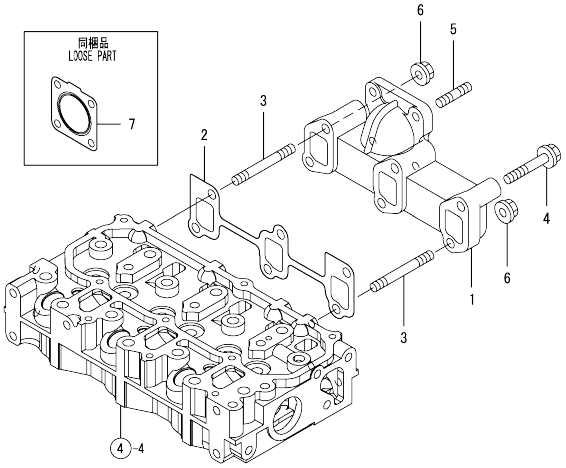

(A)=3TNV70-DPE (D)=
(B)= (E)=
(C)= (F)=

No.	Lev.	Parts No.	Description	Q'ty (A)	(B)	(C)	(D)	(E)	(F)	I	R
1	1	119718-13100	MANIFOLD, EXHAUST	1							
2	1	119717-13110	GASKET	1							
3	1	119717-13600	STUD, M8X50	2							
4	1	119802-13620	BOLT, M8X50	4							
5	1	119131-18320	STUD, M8X22	4							
6	1	26306-080002	NUT, M8	2							
7	1	119515-13200	GASKET, SILENCER	2							

N:Old ◄Yes/No► New. Q:Old ◄No/Yes► New. R:Old ◄Yes/Yes► New. S:Old ◄No/No► New. W:Add. Z:Discontinued. F:Interchangeable by set. K:Q'ty Change

Copyright (C) YANMAR GLOBAL CS CO., LTD. All RightsReserved.

Fig.6. CAMSHAFT & DRIVING GEAR

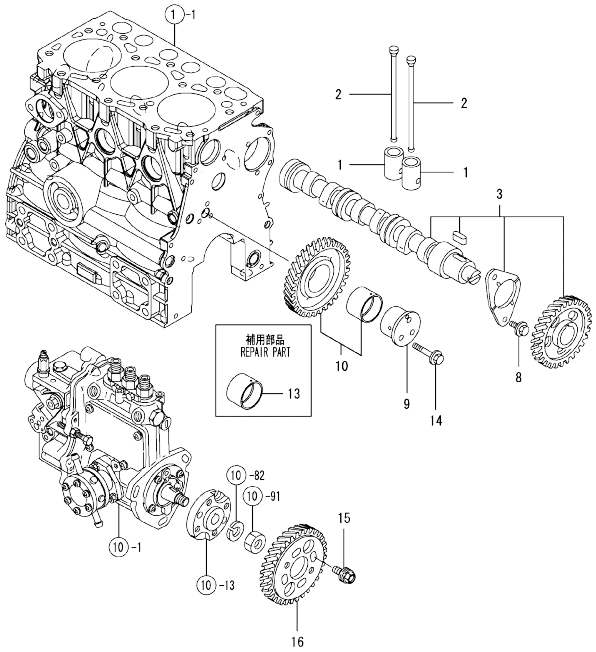

Remarks
(1) REPAIR PART.

(A)=3TNV70-DPE (D)=
(B)= (E)=
(C)= (F)=

No.	Lev.	Parts No.	Description	Q'ty (A)	(B)	(C)	(D)	(E)	(F)	I	R
1	1	119620-14200	TAPPET	6							
2	1	119515-14400	ROD, PUSH	6							
3	1	119515-14581	CAMSHAFT ASSY	1							
8	1	26106-060122	BOLT, M6X 12 PLATED	2							
9	1	119717-25050	SHAFT, IDLE	1							
10	1	119717-25101	GEAR ASSY, IDLE	1							
13	1	119717-25911	BUSH, IDLE GEAR	1							1
14	1	26106-060352	BOLT, M6X 35 PLATED	3							
15	1	129150-25301	BOLT	4							
16	1	119717-25930	GEAR, PUMP	1							

N:Old ←Yes/No→ New. Q:Old ←No/Yes→ New. R:Old ←Yes/Yes→ New. S:Old ←No/No→ New. W:Add. Z:Discontinued. F:Interchangeable by set. K:Q'ty Change

Copyright (C) YANMAR GLOBAL CS CO., LTD. All RightsReserved.

Fig.7. CRANKSHAFT & PISTON

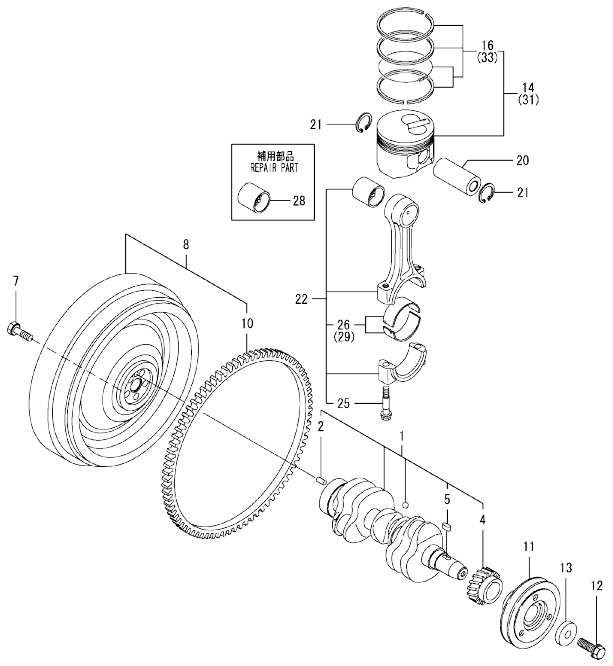

Remarks
(1) REPAIR PART.
(2) UNDER-SIZED(U.S=0.25)PART.
(3) OVER-SIZED(O.S=0.25)PART.

(A)=3TNV70-DPE (D)=
(B)= (E)=
(C)= (F)=

No.	Lev.	Parts No.	Description	Q'ty (A)	(B)	(C)	(D)	(E)	(F)	I	R
1	1	119515-21700	CRANKSHAFT ASSY	1							
2	2	129100-01580	PIN, M8X16	1							
4	2	119717-21200	GEAR, CRANKSHAFT	1							
5	2	22512-040120	KEY, 4X 12	1							
7	1	121111-21501	BOLT, FLYWHEEL	5							
8	1	119746-21570	FLYWHEEL ASSY	1							
10	2	119865-21600	GEAR, RING	1							
11	1	119717-21650	V-PULLEY	1							
12	1	119621-21680	BOLT, FLANGE 12X1.25	1							
13	1	119620-21941	WASHER	1							
14	1	119515-22080	PISTON ASSY	3							
16	2	119515-22500	RING SET, PISTON	3							
20	1	119515-22300	PIN, PISTON	3							
21	1	22252-000220	RING, 22	6							
22	1	119515-23000	ROD ASSY, CONNECTING	3							
25	2	119717-23200	BOLT, CONNECTING ROD	6							
26	2	119515-23601	BEARING, CRANK PIN	3							
28	1	119717-23910	BEARING, PISTON PIN	3							1
29	1	119515-23611	METAL ASSY, 0.25	3							2
31	1	119515-22900	PISTON ASSY, 0.25 OS	3							3
33	2	119515-22550	RING SET, 0.25 OS	3							3

N:Old ←Yes/No→ New. Q:Old ←No/Yes→ New, R:Old ←Yes/Yes→ New. S:Old ←No/No→ New. W:Add. Z:Discontinued. F:Interchangeable by set. K:Q'ty Change

Copyright (C) YANMAR GLOBAL CS CO., LTD. All RightsReserved.

Fig.8. LUB.OIL SYSTEM

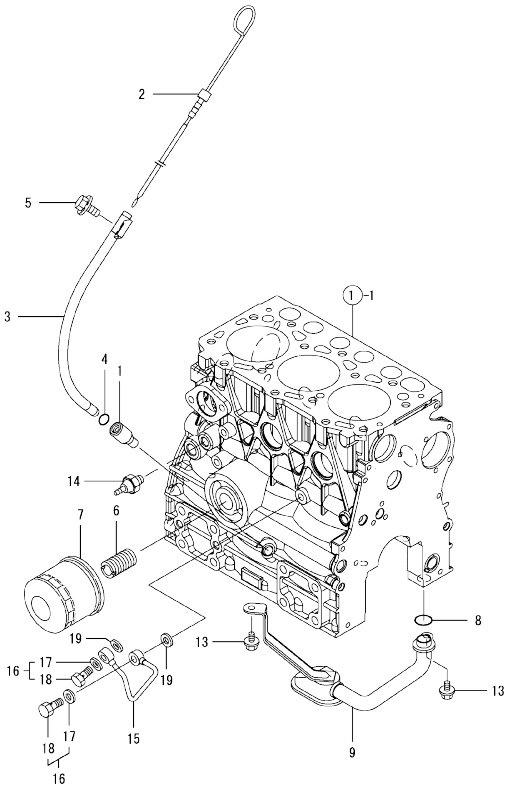

(A)=3TNV70-DPE (D)=
(B)= (E)=
(C)= (F)=

No.	Lev.	Parts No.	Description	Q'ty (A)	(B)	(C)	(D)	(E)	(F)	I	R
1	1	119260-34810	GUIDE, DIPSTICK	1							
2	1	119744-34890	DIPSTICK, OIL	1							
3	1	119744-34900	GUIDE, DIPSTICK	1							
4	1	24311-240100	O-RING, 1AP10A	1							
5	1	26106-080162	BOLT, M8X 16 PLATED	1							
6	1	129100-35140	STUD	1							
7	1	119305-35151	FILTER ASSY, D68XL65	1							1
8	1	119717-32060	O-RING, P15.0	1							
9	1	119515-35080	PIPE ASSY, OIL INLET	1							
13	1	26106-060102	BOLT, M6X 10 PLATED	2							
14	1	114250-39450	SWITCH, 0.5KG	1							
15	1	119717-39210	PIPE, OIL	1							
16	1	129005-59830	BOLT ASSY, JOINT M8	2							
17	2	22190-080002	WASHER, SEAL 6	2							
18	2	23857-030000	BOLT, JOINT 3	2							
19	1	22190-080002	WASHER, SEAL 6	2							

Remarks
(1) REPAIR PART.

N:Old ←Yes/No→ New. Q:Old ←No/Yes→ New. R:Old ←Yes/Yes→ New. S:Old ←No/No→ New. W:Add. Z:Discontinued. F:Interchangeable by set. K:Q'ty Change

Copyright (C) YANMAR GLOBAL CS CO., LTD. All RightsReserved.

Fig.9. COOLING WATER SYSTEM

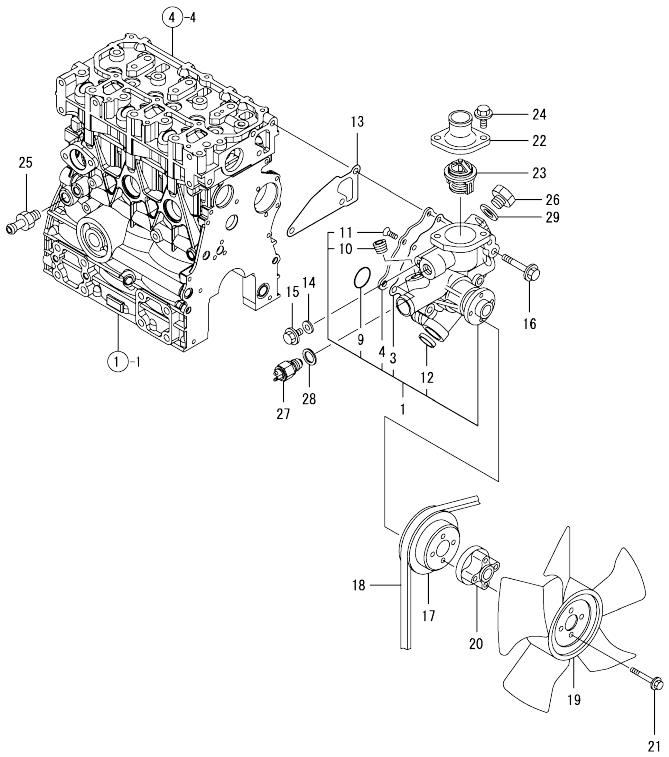

(A)=3TNV70-DPE (D)=
(B)= (E)=
(C)= (F)=

No.	Lev.	Parts No.	Description	Q'ty (A)	(B)	(C)	(D)	(E)	(F)	I	R
1	1	119540-42000	PUMP ASSY, WATER	1							
1-1	1	119C10-42000	PUMP ASSY, WATER	1						N	
	(A=E/ 86073)										
1-2	1	119C10-42001	PUMP ASSY, CW	1						N	
	(A=EL6510)										
3	2	119717-42031	GASKET	1							
4	2	119515-42041	COVER	1							
9	2	119717-42320	O-RING, P26	1							
9-1	2	119C10-42320	O-RING, 2028	1						S	
	(A=E/ 86073)										
10	2	129916-49740	PLUG, R3/8	1							
11	2	26577-060122	SCREW, M6X12	4							
12	2	27241-250000	PLUG, 25	1							
12-1	2	119717-42050	PLUG, 25	1						N	
	(A=EL6510)										
13	1	119515-42020	GASKET, WATER PUMP	1							
14	1	23414-080000	GASKET, 8X1.0	1							
15	1	26106-080122	BOLT, M8X 12 PLATED	1							
16	1	26106-080502	BOLT, M8X 50 PLATED	3							
17	1	119717-42350	V-PULLEY, D=100	1							
18	1	119740-42370	V-BELT, A35.5	1							
19	1	119265-44740	FAN, D=310X5F	1							
20	1	129457-44760	SPACER, FAN	1							
21	1	26106-060452	BOLT, M6X 45 PLATED	4							
22	1	129350-49530	COVER, THERMOSTAT	1							
23	1	119717-49800	THERMOSTAT, 71C	1							
24	1	26106-080202	BOLT, M8X 20 PLATED	2							
25	1	121550-49111	JOINT, PT1/4	1							
26	1	121450-42450	PLUG, M16	1							
27	1	121250-44901	SWITCH, THERMO 110	1							
28	1	124465-44950	GASKET, 16	1							
29	1	124465-44950	GASKET, 16	1							

N:Old ←Yes/No→ New. Q:Old ←No/Yes→ New. R:Old ←Yes/Yes→ New. S:Old ←No/No→ New. W:Add. Z:Discontinued. F:Interchangeable by set. K:Q'ty Change

Copyright (C) YANMAR GLOBAL CS CO., LTD. All RightsReserved.

Fig.10. FUEL INJECTION PUMP

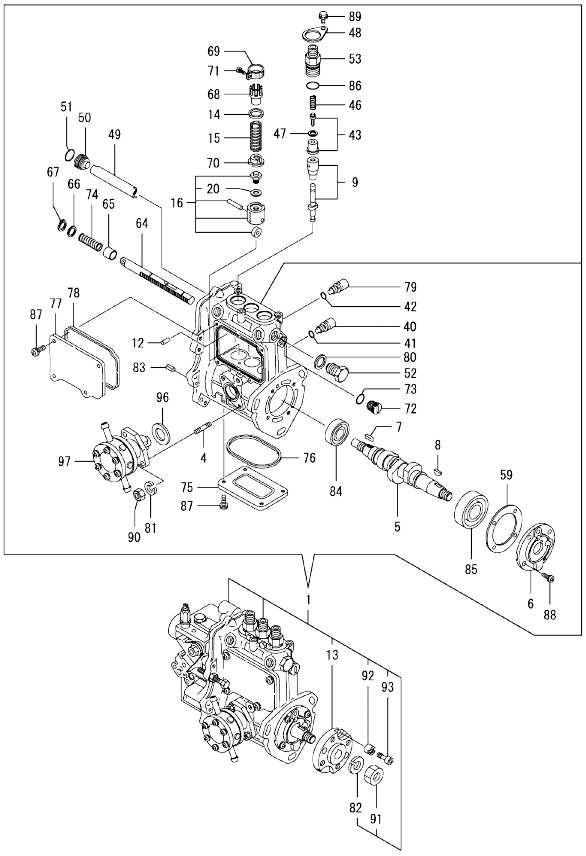

Remarks
(1) GOVERNOR ASSY(FIG.11) IS INCORPORATED IN THIS FUEL INJECTION PUMP.(REF.NO.1).

(A)=3TNV70-DPE (D)=
(B)= (E)=
(C)= (F)=

No.	Lev.	Parts No.	Description	Q'ty (A)	(B)	(C)	(D)	(E)	(F)	I	R
1	1	719744-51410	PUMP ASSY, INJECTION	1							1
4	2	129155-51020	STUD	2							
5	2	119717-51030	CAMSHAFT	1							
6	2	119717-51060	SUPPORT, CAMSHAFT	1							
7	2	119717-51070	KEY	1							
8	2	122710-51090	KEY	1							
9	2	119415-51100	PLUNGER ASSY	3							
12	2	129155-51140	PIN	3							
13	2	119717-51150	FLANGE	1							
14	2	158600-51170	RETAINER, SPRING	3							
15	2	119717-51190	SPRING, PLUNGER	3							
16	2	119717-51200	TAPPET ASSY	3							
20	3	129155-51600	SHIM SET, ADJUSTING	3							
40	2	158600-51270	STOPPER, TAPPET	3							
41	2	129155-51280	O-RING, S6	3							
42	2	129155-51280	O-RING, S6	1							
43	2	119717-51300	VALVE ASSY, DELIVERY	3							
46	2	119717-51330	SPRING, DELIVERY	3							
47	2	124550-51350	GASKET, DELIVERY	3							
48	2	118400-51370	LOCKING	3							
49	2	129155-51400	DEFLECTOR	1							
50	2	158600-51410	PLUG, DEFLECTOR	1							
51	2	119717-51420	O-RING	1							
52	2	158600-51420	PLUG, DEFLECTOR	1							
53	2	158600-51442	VALVE ASSY, DELIVERY	3							
59	2	129155-51450	SHIM SET, ADJUSTING	1							
64	2	119717-51500	RACK, CONTROL	1							
66	2	129155-51530	SPACER	1							
67	2	129155-51540	CIRCLIP	1							
68	2	129155-51550	PINION, CONTROL	3							
69	2	129100-51560	PINION	3							
70	2	119717-51570	RETAINER, SPRING	3							
71	2	129100-51570	SCREW	3							
72	2	158600-51570	PLUG	1							
73	2	129155-51580	O-RING	1							
74	2	129155-51591	SPRING, RACK	1							
75	2	129155-51701	COVER	1							
76	2	119717-51711	GASKET	1							
77	2	119717-51750	COVER	1							
78	2	119717-51761	GASKET	1							
79	2	158600-51790	STOOPER, RACK	1							
80	2	22190-160002	WASHER, SEAL 16	1							
81	2	22217-060000	WASHER, SPRING 6	2							
82	2	22217-120000	WASHER, SPRING 12	1							
83	2	22351-050010	PIN, SPRING 5.0X10	2							
84	2	24101-060034	BEARING, BALL 6003	1							
85	2	24101-063034	BEARING, BALL 6303	1							
86	2	24316-000150	O-RING, 4DP15.0	3							
87	2	26022-050122	SCREW, M5X12	8							
88	2	26022-060162	SCREW, M6X16	4							
89	2	26106-050102	BOLT, M5X 10 PLATED	3							

N:Old ←Yes/No→ New. Q:Old ←No/Yes→ New. R:Old ←Yes/Yes→ New. S:Old ←No/No→ New. W:Add. Z:Discontinued. F:Interchangeable by set. K:Q'ty Change

++ CONTINUE ++

Copyright (C) YANMAR GLOBAL CS CO., LTD. All RightsReserved.

Fig.10. FUEL INJECTION PUMP

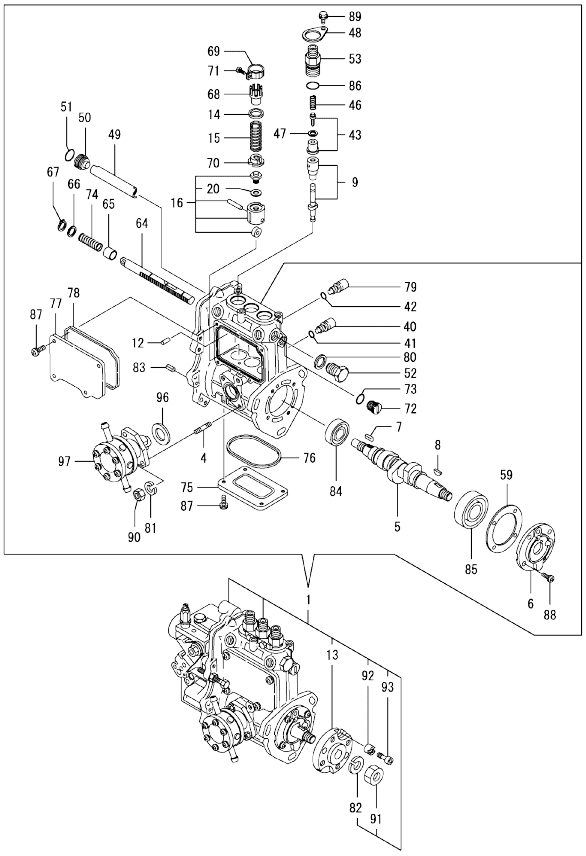

Remarks
(1) GOVERNOR ASSY(FIG.11) IS INCORPORATED IN THIS FUEL INJECTION PUMP.(REF.NO.1).

(A)=3TNV70-DPE (D)=
(B)= (E)=
(C)= (F)=

No.	Lev.	Parts No.	Description	Q'ty (A)	(B)	(C)	(D)	(E)	(F)	I	R
90	2	26716-060002	NUT, M6	2							
91	2	26716-120002	NUT, M12	1							
92	2	119717-51480	COLLAR	1							
93	2	119717-51490	BOLT	1							
96	2	129155-52051	GASKET	1							
97	2	129100-52101	PUMP ASSY, FUEL FEED	1							

N:Old ←Yes/No→ New. Q:Old ←No/Yes→ New. R:Old ←Yes/Yes→ New. S:Old ←No/No→ New. W:Add. Z:Discontinued. F:Interchangeable by set. K:Q'ty Change

Copyright (C) YANMAR GLOBAL CS CO., LTD. All RightsReserved.

Fig.11. GOVERNOR

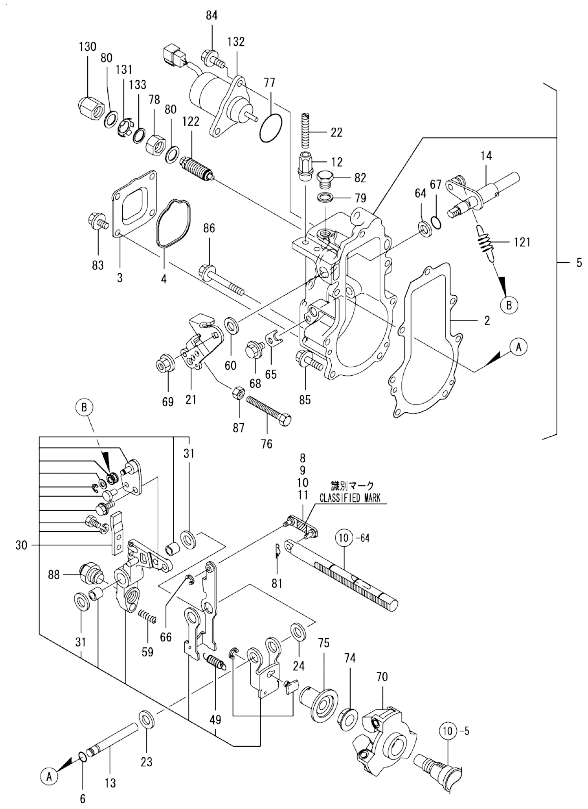

Remarks
* THIS FIGURE(GOVERNOR ASSY)IS INCORPORATED IN THE FUEL INJECTION PUMP ASSY(FIG.10).
(1) SELECTIVE PARTS;CERTAIN THE CLASSIFICATION MARK,THEN PLACE YOUR ORDER.(REF.TO.ILLUSTRATION).

(A)=3TNV70-DPE (D)=
(B)= (E)=
(C)= (F)=

No.	Lev.	Parts No.	Description	Q'ty (A)	(B)	(C)	(D)	(E)	(F)	I	R
2	2	119717-61050	GASKET	1							
3	2	119717-61060	COVER, GOVERNOR CASE	1							
4	2	119717-61070	GASKET	1							
5	2	119717-61100	CASE ASSY, GOVERNOR	1							
6	3	129155-51280	O-RING, S6	1							
8	3	119717-61120	LINK, MARK :3	1							1
9	3	119717-61130	LINK, MARK 98	1							1
10	3	119717-61140	LINK, MARK 88	1							1
11	3	119717-61150	LINK, MARK 03	1							1
12	3	129209-61370	NUT, M6	1							
13	3	129052-61390	SHAFT	1							
14	3	119717-61400	SHAFT ASSY	1							
21	3	119515-61440	LEVER, CONTROL	1							
22	3	129155-61450	BOLT, LIMITER	1							
23	3	129156-61460	SHIM, T=0.6	1							
24	3	129155-61480	SPACER ASSY	1							
30	3	119717-61500	LEVER ASSY, GOVERNOR	1							
31	4	174307-51700	SHIM SET	2							
49	4	129486-61540	SPRING, SET	1							
59	3	129100-61650	SPRING, CONTROLLER	1							
60	3	158552-61700	SHIM SET	1							
64	3	158552-61710	SHIM, T=1.0	1							
65	3	119660-61901	RETAINER, SHAFT	1							
66	3	22272-000030	RING, E- 3	1							
67	3	24341-000070	O-RING, 1AS7.0	1							
68	3	26106-060102	BOLT, M6X 10 PLATED	1							
69	3	26366-080002	NUT, M8	1							
70	2	119717-61200	WEIGHT ASSY,GOVERNOR	1							
74	2	129008-61301	NUT	1							
75	2	129155-61341	SLEEVE	1							
76	2	129155-61460	BOLT, IDLE	1							
77	2	158552-61900	O-RING	1							
78	2	129209-61920	NUT, ARB	1							
79	2	22190-100002	WASHER, SEAL 10	1							
80	2	22190-120002	WASHER, SEAL 12	2							
81	2	22372-040000	PIN, SNAP 4	1							
82	2	23887-100002	PLUG, 10	1							
83	2	26106-060102	BOLT, M6X 10 PLATED	4							
84	2	26106-060142	BOLT, M6X 14 PLATED	2							
85	2	26106-060202	BOLT, M6X 20 PLATED	4							
86	2	26106-060452	BOLT, M6X 45 PLATED	3							
87	2	26756-060002	NUT, LOCK M6	1							
88	2	119527-61560	ANGLEICH ASSY	1							
121	2	129573-61700	SPRING, GOVERNOR	1							
122	2	158601-61700	LIMITER ASSY, FUEL	1							
130	2	129209-61930	NUT, CAP	1							
131	2	129209-61970	PLATE	1							
132	2	119653-77950	SOLENOID, STOP	1							
133	2	23414-120016	GASKET, 12X1.0	1							

N:Old ←Yes/No→ New. Q:Old ←No/Yes→ New. R:Old ←Yes/Yes→ New. S:Old ←No/No→ New. W:Add. Z:Discontinued. F:Interchangeable by set. K:Q'ty Change

Copyright (C) YANMAR GLOBAL CS CO., LTD. All RightsReserved.

Fig.12. FUEL INJECTION VALVE

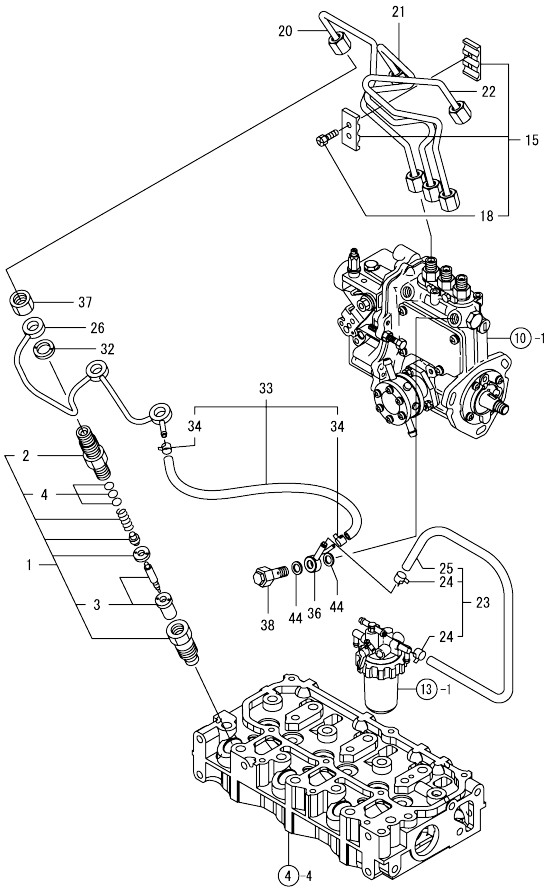

(A)=3TNV70-DPE (D)=
(B)= (E)=
(C)= (F)=

No.	Lev.	Parts No.	Description	Q'ty (A)	(B)	(C)	(D)	(E)	(F)	I	R
1	1	119515-53001	VALVE ASSY,INJECTION	3							
2	2	118200-53010	HOLDER, NOZZLE	3							
3	2	119515-53010	VALVE ASSY,INJECTION	3							
4	2	129901-53800	SHIM SET, ADJUSTING	3							
15	1	129150-59120	RETAINER, PIPE	1							
18	2	129150-59131	BOLT, M4X14	2							
20	1	119546-59810	PIPE ASSY, INJECTION	1							
21	1	119546-59820	PIPE ASSY, INJECTION	1							
22	1	119546-59830	PIPE ASSY, INJECTION	1							
23	1	129210-59150	PIPE ASSY, FUEL	1							
24	2	124766-59050	CLIP, HOSE 12	2							
25	2	105025-59530	PIPE, FUEL D13X400	1							
26	1	119515-59540	PIPE ASSY, RETURN	1							
32	1	129901-59560	GASKET	3							
33	1	119540-59570	PIPE ASSY, RETURN	1							
34	2	124066-59100	CLIP, HOSE 8	2							
36	1	119840-59570	JOINT	1							
37	1	119620-59700	NUT, NOZZLE	3							
38	1	119813-59950	VALVE ASSY, CHECK	1							
44	1	22190-120002	WASHER, SEAL 12	2							

N:Old ←Yes/No→ New. Q:Old ←No/Yes→ New. R:Old ←Yes/Yes→ New. S:Old ←No/No→ New. W:Add. Z:Discontinued. F:Interchangeable by set. K:Q'ty Change

Copyright (C) YANMAR GLOBAL CS CO., LTD. All RightsReserved.

Fig.13. FUEL LINE

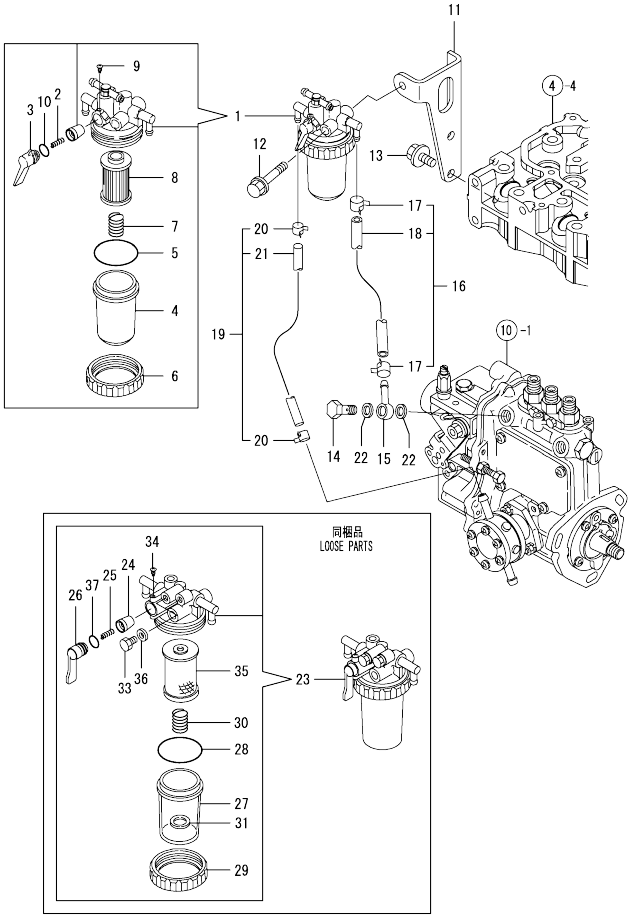

(A)=3TNV70-DPE (D)=
(B)= (E)=
(C)= (F)=

No.	Lev.	Parts No.	Description	Q'ty (A)	(B)	(C)	(D)	(E)	(F)	I	R
1	1	119833-55620	FILTER ASSY, FUEL	1							
2	2	104200-55330	SPRING, VALVE	1							
3	2	119810-55340	LEVER	1							
4	2	121254-55510	COVER	1							
5	2	102103-55520	O-RING	1							
6	2	110250-55610	RING, RETAINING	1							
7	2	121250-55620	SPRING	1							
8	2	119810-55650	ELEMENT	1							
9	2	104200-55750	SCREW, M4	1							
10	2	24311-240100	O-RING, 1AP10A	1							
11	1	119717-55650	BRACKET, FILTER	1							
12	1	26014-080702	BOLT, M8X 70	1							
13	1	26106-080162	BOLT, M8X 16 PLATED	2							
14	1	103854-39140	BOLT, PIPE JOINT	1							
15	1	101304-59020	JOINT, PIPE 12	1							
16	1	129210-59080	PIPE ASSY, FUEL	1							
17	2	124766-59050	CLIP, HOSE 12	2							
18	2	129136-59110	PIPE, D13/7.5X270	1							
19	1	129210-59150	PIPE ASSY, FUEL	1							
20	2	124766-59050	CLIP, HOSE 12	2							
21	2	105025-59530	PIPE, FUEL D13X400	1							
22	1	22190-120002	WASHER, SEAL 12	2							
23	1	129335-55700	SEPARATOR ASSY,WATER	1							
24	2	104200-55321	VALVE, TAPER	1							
25	2	104200-55330	SPRING, VALVE	1							
26	2	104200-55341	HANDLE	1							
27	2	124064-55510	COVER	1							
28	2	102103-55520	O-RING	1							
29	2	110250-55610	RING, RETAINING	1							
30	2	121257-55720	SPRING	1							
31	2	121257-55731	FLOAT	1							
33	2	101720-55750	PLUG, 6	2							
34	2	104200-55750	SCREW, M4	1							
35	2	171081-55910	SCREEN	1							
36	2	23418-060000	GASKET, 6X1.0	2							
37	2	24311-240100	O-RING, 1AP10A	1							

N:Old $\xleftarrow[\text{No}]{\text{Yes}}$ New. Q:Old $\xleftarrow[\text{Yes}]{\text{No}}$ New. R:Old $\xleftarrow[\text{Yes}]{\text{Yes}}$ New. S:Old $\xleftarrow[\text{No}]{\text{No}}$ New. W:Add. Z:Discontinued. F:Interchangeable by set. K:Q'ty Change

Copyright (C) YANMAR GLOBAL CS CO., LTD. All RightsReserved.

Fig.14. STARTING MOTOR

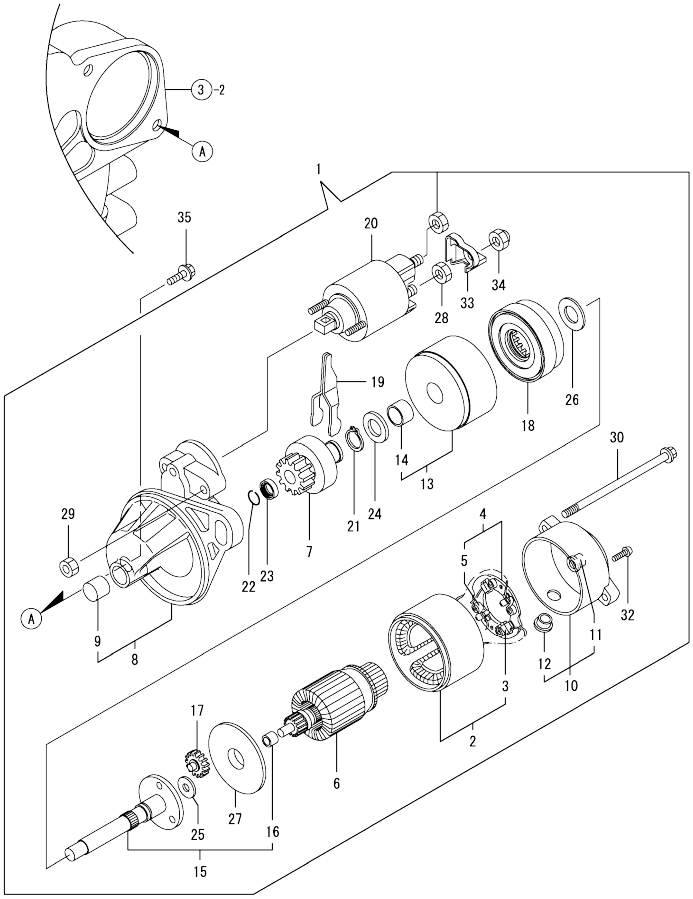

(A)=3TNV70-DPE (D)=
(B)= (E)=
(C)= (F)=

No.	Lev.	Parts No.	Description	Q'ty (A)	(B)	(C)	(D)	(E)	(F)	I	R
1	1	119717-77010	STARTER, P1.1	1							
2	2	X0281007750	YOKE ASSY	1							
3	3	X0280996180	STARTER KIT	2							
4	2	X0285105190	HOLDER ASSY	1							
5	3	X0285205030	SPRING	4							
6	2	X0282005991	ARMATURE ASSY	1							
7	2	X0283006960	CLUTCH ASSY	1							
8	2	X4284001590	HOUSING ASSY	1							
9	3	X9491050100	BEARING, NEEDLE	1							
10	2	X0285007030	FRAME ASSY	1							
11	3	X9491040990	BEARING	1							
12	3	X0280626010	COVER	1							
13	2	X0284105040	BEARING ASSY	1							
14	3	X9491034330	BEARING	1							
15	2	X0286105010	SHAFT ASSY	1							
16	3	X9491034320	BEARING	1							
17	2	X0286305010	GEAR	3							
18	2	X0286355010	GEAR	1							
19	2	X0287405140	LEVER	1							
20	2	X0534007800	SWITCH ASSY	1							
21	2	X9055715000	RING	1							
22	2	X9490721360	RING	1							
23	2	X0280210331	NUT	1							
24	2	X9490138110	WASHER	1							
25	2	X9490138090	WASHER	1							
26	2	X9490138100	WASHER	1							
27	2	X0284525010	PLATE	1							
28	2	X9490562360	NUT	1							
29	2	X9490560750	NUT	2							
30	2	X9490423420	BOLT, THROUGH	2							
32	2	X9490065670	SCREW, M4X6	2							
33	2	X0280335350	COVER, TERMINAL	1							
34	2	X1289510130	NUT	1							
35	1	26106-100252	BOLT, M10X 25 PLATED	2							

N:Old ←Yes/No→ New. Q:Old ←No/Yes→ New. R:Old ←Yes/Yes→ New. S:Old ←No/No→ New. W:Add. Z:Discontinued. F:Interchangeable by set. K:Q'ty Change

Copyright (C) YANMAR GLOBAL CS CO., LTD. All RightsReserved.

Fig.15. GENERATOR

(A)=3TNV70-DPE
(B)=
(C)=
(D)=
(E)=
(F)=

No.	Lev.	Parts No.	Description	Q'ty (A)	(B)	(C)	(D)	(E)	(F)	I	R
1	1	171301-77201	DYNAMO ASSY, 15A	1							
2	2	XM08137	PLATE ASSY	1							
3	3	X2A07073KA	PLATE	1							
4	3	X4A07023KB	STATOR ASSY	1							
5	3	24104-062010	BEARING, 6201UUC3	3							
6	3	XM329830000	COLLAR	1							
7	3	XM069000000	CLAMP	1							
8	3	X417878	COUPLER	1							
9	3	XYSPS402400	SCREW	2							
10	3	XYSPS400800	SCREW	1							
11	2	X3A08877KA	FLYWHEEL	1							
12	2	XM67935	WASHER	1							
13	2	XM721740000	PULLEY	1							
14	2	X4A07403K01	SHAFT	1							
15	2	XM860250000	WASHER	1							
16	2	XM219230000	WASHER	1							
17	2	XM863720000	NUT	1							
18	1	26106-100452	BOLT, M10X 45 PLATED	1							
19	1	119940-77270	SPACER, GENERATOR	1							
20	1	119742-77300	ADJUSTER	1							
21	1	129972-77341	BOLT, ADJUSTER L=50	1							
22	1	26106-080202	BOLT, M8X 20 PLATED	1							
23	1	194215-52110	SWITCH, STARTING	1							
28	2	194155-52160	KEY ASSY	1							
31	1	119643-66900	DIODE	1							
32	1	119225-77721	LIMITER, CURRENT 20A	1							
33	1	119650-77910	RELAY ASSY, GLOW	1							
36	1	129211-77920	TIMER	1							

N:Old ◄Yes/No► New. Q:Old ◄No/Yes► New. R:Old ◄Yes/Yes► New. S:Old ◄No/No► New. W:Add. Z:Discontinued. F:Interchangeable by set. K:Q'ty Change

Copyright (C) YANMAR GLOBAL CS CO., LTD. All RightsReserved.

Fig.16. GASKET SET

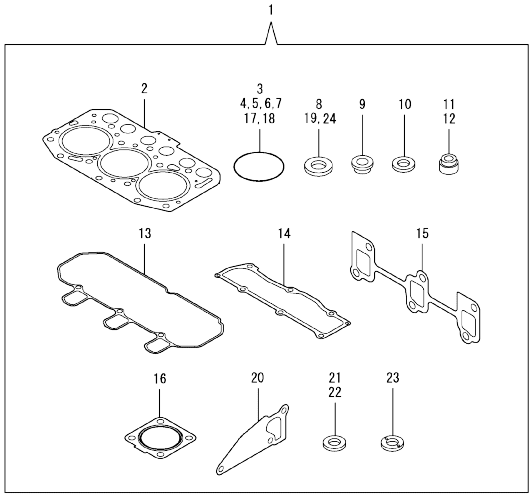

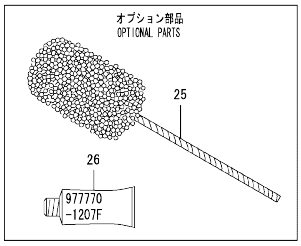

Remarks
(1) OPTIONAL PART.

(A)=3TNV70-DPE (D)=
(B)= (E)=
(C)= (F)=

No.	Lev.	Parts No.	Description	Q'ty (A)	(B)	(C)	(D)	(E)	(F)	I	R
1	1	719515-92790	GASKET SET	1							1
2	2	119515-01330	GASKET, HEAD	1							
3	2	119624-32040	O-RING, P12.0	1							
4	2	119717-32050	O-RING, P17.0	3							
5	2	121850-51960	O-RING	1							
6	2	24311-000320	O-RING, 1AP32.0	2							
7	2	24341-000240	O-RING, 1AS24.0	1							
8	2	22190-160002	WASHER, SEAL 16	1							
9	2	129901-11450	PROTECTOR, NOZZLE	3							
10	2	119600-11460	GASKET, NOZZLE	6							
11	2	119717-11340	SEAL, VALVE STEM	3							
12	2	119717-11350	SEAL, VALVE STEM	3							
13	2	119515-11310	GASKET, BONNET	1							
14	2	119515-11330	GASKET	1							
15	2	119717-13110	GASKET	1							
16	2	119515-13200	GASKET, SILENCER	2							
17	2	24311-240100	O-RING, 1AP10A	1							
18	2	119717-32060	O-RING, P15.0	1							
19	2	22190-080002	WASHER, SEAL 6	4							
20	2	119515-42020	GASKET, WATER PUMP	1							
21	2	23414-080000	GASKET, 8X1.0	1							
22	2	124465-44950	GASKET, 16	2							
23	2	129901-59560	GASKET	3							
24	2	22190-120002	WASHER, SEAL 12	4							
25	1	129400-92410	HONE	1							1
26	1	977770-1207F	GASKET.LIQUID	1							1

N:Old ←Yes/No→ New. Q:Old ←No/Yes→ New. R:Old ←Yes/Yes→ New. S:Old ←No/No→ New. W:Add. Z:Discontinued. F:Interchangeable by set. K:Q'ty Change

Copyright (C) YANMAR GLOBAL CS CO., LTD. All RightsReserved.

Parts No. Index

Parts No.	Fig. No.	Ref. No.
101304-59020	13	15
101720-55750	13	33
102103-55520	13	5
		28
103854-39140	13	14
104200-55321	13	24
104200-55330	13	2
		25
104200-55341	13	26
104200-55750	13	9
		34
105010-11490	4	3
105025-59530	12	25
	13	21
105311-01090	1	5
105425-01690	3	11
110250-55610	13	6
		29
114250-39450	8	14
118200-53010	12	2
118400-51370	10	48
119131-18320	5	5
119225-77721	15	32
119260-34810	8	1
119265-44740	9	19
119285-01990	1	8
119285-11990	4	9
119305-35151	8	7
119415-51100	10	9
119515-01200	1	26
119515-01330	1	27
	16	2
119515-01720	3	9
119515-01770	3	10
119515-11101	4	11
119515-11110	4	12
119515-11200	4	20
119515-11240	4	21
119515-11280	4	25
119515-11310	4	44
	16	13
119515-11320	4	45
119515-11330	4	46
	16	14
119515-11380	4	34
119515-11740	4	4
119515-11800	4	18
119515-13200	5	7
	16	16
119515-14400	6	2

Parts No.	Fig. No.	Ref. No.
119515-14581	6	3
119515-21700	7	1
119515-22080	7	14
119515-22300	7	20
119515-22500	7	16
119515-22550	7	33
119515-22900	7	31
119515-23000	7	22
119515-23601	7	26
119515-23611	7	29
119515-35080	8	9
119515-42020	9	13
	16	20
119515-42041	9	4
119515-53001	12	1
119515-53010	12	3
119515-59540	12	26
119515-61440	11	21
119527-61560	11	88
119540-42000	9	1
119540-59570	12	33
119546-59810	12	20
119546-59820	12	21
119546-59830	12	22
119600-11460	4	2
	16	10
119620-01750	3	5
119620-01800	2	7
119620-02020	1	9
119620-14200	6	1
119620-21941	7	13
119620-59700	12	37
119621-21680	7	12
119623-01250	1	6
119624-32040	2	18
	16	3
119643-66900	15	31
119650-77910	15	33
119653-77950	11	132
119660-01911	2	17
119660-61901	11	65
119717-01501	2	1
119717-01570	2	2
119717-01611	3	2
119717-01750	2	16
119717-02411	1	12
119717-02930	1	23
119717-03031	4	35
119717-03070	4	36
		37

Parts No.	Fig. No.	Ref. No.
119717-11131	4	13
119717-11190	4	15
119717-11260	4	24
119717-11340	4	16
	16	11
119717-11350	4	17
	16	12
119717-11650	4	26
119717-13110	5	2
	16	15
119717-13600	5	3
119717-21200	7	4
119717-21650	7	11
119717-23200	7	25
119717-23910	7	28
119717-25050	6	9
119717-25101	6	10
119717-25911	6	13
119717-25930	6	16
119717-32050	2	19
	16	4
119717-32060	8	8
	16	18
119717-32080	2	9
119717-32100	2	8
119717-32110	2	13
119717-32120	2	14
119717-39210	8	15
119717-42031	9	3
119717-42050	9	12 -1
119717-42320	9	9
119717-42350	9	17
119717-49800	9	23
119717-51030	10	5
119717-51060	10	6
119717-51070	10	7
119717-51150	10	13
119717-51190	10	15
119717-51200	10	16
119717-51300	10	43
119717-51330	10	46
119717-51420	10	51
119717-51480	10	92
119717-51490	10	93
119717-51500	10	64
119717-51570	10	70
119717-51711	10	76
119717-51750	10	77
119717-51761	10	78
119717-55650	13	11

Parts No.	Fig. No.	Ref. No.
119717-61050	11	2
119717-61060	11	3
119717-61070	11	4
119717-61100	11	5
119717-61120	11	8
119717-61130	11	9
119717-61140	11	10
119717-61150	11	11
119717-61200	11	70
119717-61400	11	14
119717-61500	11	30
119717-77010	14	1
119717-77800	4	55
119717-77820	4	56
119718-13100	5	1
119740-42370	9	18
119742-77300	15	20
119744-01521	2	5
119744-01590	2	3
119744-34890	8	2
119744-34900	8	3
119746-21570	7	8
119802-03100	4	38
119802-03110	4	39
119802-03121	4	40
119802-03131	4	41
119802-03141	4	42
119802-13620	5	4
119802-32130	2	15
119810-02941	1	34
119810-55340	13	3
119810-55650	13	8
119813-59950	12	38
119833-55620	13	1
119840-59570	12	36
119865-21600	7	10
119940-77270	15	19
119C10-42000	9	1 -1
119C10-42001	9	1 -2
119C10-42320	9	9 -1
121023-01551	2	30
121111-21501	7	7
121250-44901	9	27
121250-55620	13	7
121254-55510	13	4
121257-55720	13	30
121257-55731	13	31
121450-42450	9	26
121550-49111	9	25
121850-51960	2	20

Parts No. Index

Parts No.	Fig. No.	Ref. No.
121850-51960	16	5
122710-51090	10	8
124060-01050	1	4
124064-55510	13	27
124066-59100	12	34
124085-02220	3	6
124160-01751	2	28
	4	33
124160-01910	1	7
124465-44950	9	28
		29
	16	22
124550-51350	10	47
124766-59050	12	24
	13	17
		20
129001-32320	2	11
129001-32330	2	12
129005-59830	8	16
129008-61301	11	74
129052-61390	11	13
129100-01580	3	1
	7	2
129100-35140	8	6
129100-51560	10	69
129100-51570	10	71
129100-52101	10	97
129100-61650	11	59
129136-59110	13	18
129150-11230	4	27
129150-11750	4	29
129150-25301	6	15
129150-59120	12	15
129150-59131	12	18
129155-51020	10	4
129155-51140	10	12
129155-51280	10	41
		42
	11	6
129155-51400	10	49
129155-51450	10	59
129155-51530	10	66
129155-51540	10	67
129155-51550	10	68
129155-51580	10	73
129155-51591	10	74
129155-51600	10	20
129155-51701	10	75
129155-52051	10	96
129155-61341	11	75

Parts No.	Fig. No.	Ref. No.
129155-61450	11	22
129155-61460	11	76
129155-61480	11	24
129156-61460	11	23
129209-61370	11	12
129209-61920	11	78
129209-61930	11	130
129209-61970	11	131
129210-59080	13	16
129210-59150	12	23
	13	19
129211-77920	15	36
129335-55700	13	23
129350-49530	9	22
129400-92410	16	25
129457-44760	9	20
129486-35210	3	4
129486-61540	11	49
129508-11180	4	14
129573-61700	11	121
129900-07900	4	53
129900-32130	2	10
129901-11450	4	1
	16	9
129901-53800	12	4
129901-59560	12	32
	16	23
129916-49740	9	10
129972-77341	15	21
158552-61700	11	60
158552-61710	11	64
158552-61900	11	77
158600-51170	10	14
158600-51270	10	40
158600-51410	10	50
158600-51420	10	52
158600-51442	10	53
158600-51570	10	72
158600-51790	10	79
158601-61700	11	122
171081-55910	13	35
171301-77201	15	1
174307-51700	11	31
194155-52160	15	28
194215-52110	15	23
22190-080002	8	17
		19
	16	19
22190-100002	11	79
22190-120002	11	80

Parts No.	Fig. No.	Ref. No.
22190-120002	12	44
	13	22
	16	24
22190-160002	3	13
	10	80
	16	8
22217-060000	10	81
22217-120000	10	82
22242-000120	4	30
22252-000220	7	21
22272-000030	11	66
22351-050010	10	83
22351-060012	4	19
22372-040000	11	81
22512-040120	7	5
22857-500100	4	47
		48
22857-500160	4	49
23414-080000	9	14
	16	21
23414-120016	11	133
23418-060000	13	36
23857-030000	8	18
23876-005000	4	10
23876-030000	2	6
23887-100002	11	82
24101-060034	10	84
24101-063034	10	85
24104-062010	15	5
24311-000320	2	29
	4	50
	16	6
24311-240100	8	4
	13	10
		37
	16	17
24316-000150	10	86
24341-000070	11	67
24341-000240	2	31
	16	7
26014-080702	13	12
26022-050122	10	87
26022-060162	10	88
26106-050102	10	89
26106-060102	8	13
	11	68
		83
26106-060122	2	21
	3	14
	6	8

Parts No.	Fig. No.	Ref. No.
26106-060142	11	84
26106-060162	2	22
		32
26106-060202	4	51
	11	85
26106-060252	3	15
26106-060352	6	14
26106-060402	2	23
		24
26106-060452	3	16
	9	21
	11	86
26106-060602	2	25
26106-060652	2	26
26106-060752	4	52
26106-080122	9	15
26106-080162	4	54
	8	5
	13	13
26106-080202	9	24
	15	22
26106-080402	4	32
26106-080502	9	16
26106-100252	14	35
26106-100452	15	18
26206-100252	3	7
26206-100302	3	8
26306-080002	2	27
	5	6
26366-080002	11	69
26577-060122	9	11
26716-060002	10	90
26716-120002	10	91
26756-060002	11	87
26979-050162	4	31
27241-120000	1	13
27241-250000	9	12
719515-01560	1	1
719515-92790	16	1
719717-02901	1	28
719717-02911	1	31
719744-01500	2	4
719744-51410	10	1
977770-1207F	16	26
X0280210331	14	23
X0280335350	14	33
X0280626010	14	12
X0280996180	14	3
X0281007750	14	2
X0282005991	14	6

Parts No. Index

Parts No.	Fig. No.	Ref. No.
X0283006960	14	7
X0284105040	14	13
X0284525010	14	27
X0285007030	14	10
X0285105190	14	4
X0285205030	14	5
X0286105010	14	15
X0286305010	14	17
X0286355010	14	18
X0287405140	14	19
X0534007800	14	20
X1289510130	14	34
X2A07073KA	15	3
X3A08877KA	15	11
X417878	15	8
X4284001590	14	8
X4A07023KB	15	4
X4A07403K01	15	14
X9055715000	14	21
X9490065670	14	32
X9490138090	14	25
X9490138100	14	26
X9490138110	14	24
X9490423420	14	30
X9490560750	14	29
X9490562360	14	28
X9490721360	14	22
X9491034320	14	16
X9491034330	14	14
X9491040990	14	11
X9491050100	14	9
XM069000000	15	7
XM08137	15	2
XM219230000	15	16
XM329830000	15	6
XM67935	15	12
XM721740000	15	13
XM860250000	15	15
XM863720000	15	17
XYSPS400800	15	10
XYSPS402400	15	9

Parts No.	Fig. No.	Ref. No.

Parts No.	Fig. No.	Ref. No.

Parts No.	Fig. No.	Ref. No.