YANMAR

PARTS CATALOG

0CR10-M57300EN

Last update Feb., 2013

PREFACE

1. This Parts Catalog carries all parts incorporated in YANMAR Model 3TNV70-NBK, 3TNV70-GGE, 3TNV70-GGET, 3TNV70-GGEC, 3TNV70-HGE, 3TNV70-HGET engine manufactured since December, 2004.

2. Each illustration corresponds to the parts list on the following page.

3. When ordering parts, clearly write down the engine model and serial number, as well as the name and number of each part in your order sheet. This will help insure reliable delivery of the parts you have ordered.

Contents

0CR10-M57300

Fig. No.	Fig. Name
ENGINE	
1.	CYLINDER BLOCK
2.	GEAR HOUSING
3.	FLYWHEEL HOUSING & OIL SUMP
4.	CYLINDER HEAD & BONNET
5.	AIR CLEANER
6.	EXHAUST MANIFOLD
7.	CAMSHAFT & DRIVING GEAR
8.	CRANKSHAFT & PISTON
9.	LUB. OIL SYSTEM
10.	COOLING WATER SYSTEM
11.	FUEL INJECTION PUMP
12.	GOVERNOR
13.	FUEL INJECTION VALVE
14.	FUEL PIPING
15.	STARTER MOTOR
16.	GENERATOR
17.	GASKET SET

Fig.1. CYLINDER BLOCK

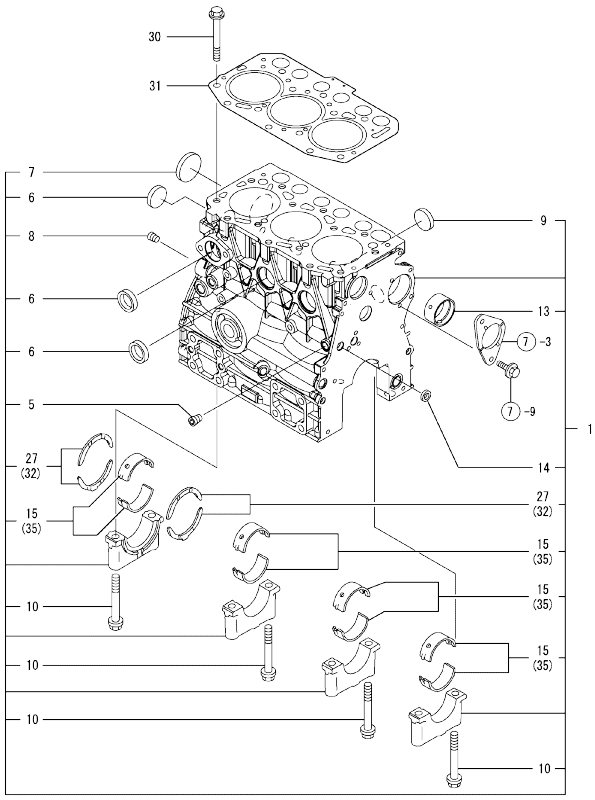

Remarks
(1)Over-sized(O.S.=0.25) parts.
(2)Repair parts.
(3)Under-sized(U.S.=0.25) parts.

(A)=3TNV70-NBK
(B)=3TNV70-GGE
(C)=3TNV70-HGE
(D)=3TNV70-GGET
(E)=3TNV70-GGEC
(F)=3TNV70-HGET

No.	Lev.	Parts No.	Description	Q'ty (A)	(B)	(C)	(D)	(E)	(F)	I	R
1	1	719515-01560	BLOCK ASSY, CYLINDER	1	1	1	1	1	1		
5	2	124060-01050	PLUG, PT1/8	1	1	1	1	1	1		
6	2	105311-01090	PLUG, 30	4	4	4	4	4	4		
7	2	119623-01250	PLUG, 45	1	1	1	1	1	1		
8	2	124160-01910	PLUG, PT1/4	1	1	1	1	1	1		
9	2	119285-01990	PLUG, 25	3	3	3	3	3	3		
10	2	119620-02020	BOLT, METAL CAP	8	8	8	8	8	8		
13	2	119717-02410	BUSH, CAMSHAFT	1	1	1	1	1	1		
14	2	27241-120000	PLUG, 12	1	1	1	1	1	1		
15	2	719717-02900	METAL ASSY, MAIN	4	4	4	4	4	4		2
27	2	119717-02930	METAL ASSY, THRUST	2	2	2	2	2	2		
30	1	119515-01200	BOLT, CYLINDER HEAD	14	14	14	14	14	14		
31	1	119515-01330	GASKET, HEAD	1	1	1	1	1	1		
32	1	119810-02940	METAL ASSY, 0.25 OS	2	2	2	2	2	2		1
35	1	719717-02910	BEARING ASSY, MAIN	4	4	4	4	4	4		3

N:Old ←Yes/No→ New. Q:Old ←No/Yes→ New. R:Old ←Yes/Yes→ New. S:Old ←No/No→ New. W:Add. Z:Discontinued. F:Interchangeable by set. K:Q'ty Change

Copyright (C) YANMAR GLOBAL CS CO., LTD. All RightsReserved.

Fig.2. GEAR HOUSING

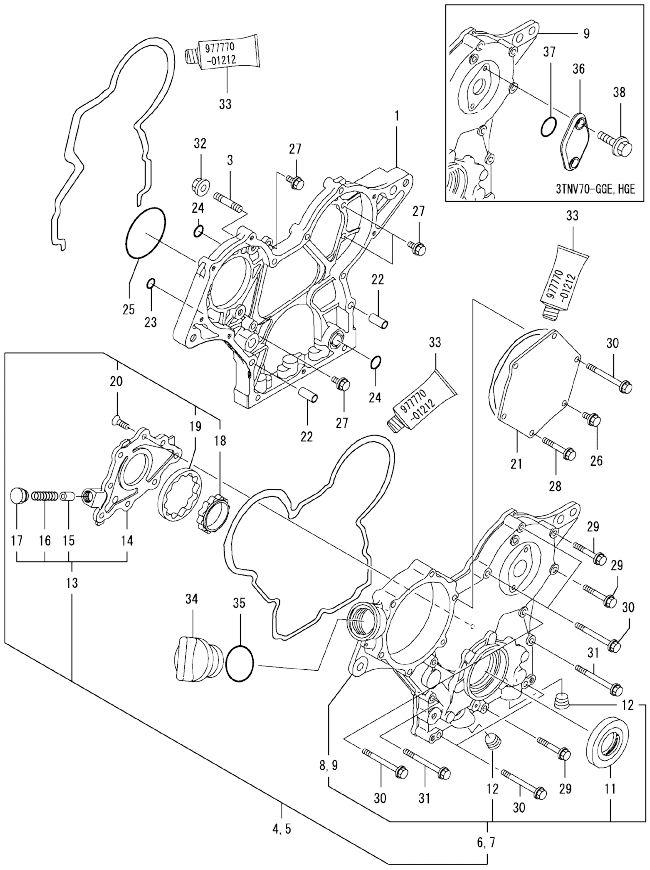

Remarks
(1)Optional parts.

(A)=3TNV70-NBK
(B)=3TNV70-GGE
(C)=3TNV70-HGE
(D)=3TNV70-GGET
(E)=3TNV70-GGEC
(F)=3TNV70-HGET

No.	Lev.	Parts No.	Description	Q'ty (A)	(B)	(C)	(D)	(E)	(F)	I	R
1	1	119717-01501	CASE, GEAR	1	1	1	1	1	1		
3	1	119717-01570	STUD	3	3	3	3	3	3		
4	1	119717-01590	COVER ASSY, CASE	1							
5	1	119744-01590	COVER ASSY, CASE		1	1	1	1	1		
6	2	719717-01500	COVER ASSY, CASE	1							
7	2	719744-01500	COVER ASSY, CASE		1	1	1	1	1		
8	3	119717-01521	COVER, GEAR CASE	1							
9	3	119744-01521	COVER, GEAR CASE		1	1	1	1	1		
11	3	119620-01800	SEAL, OIL HTC456208	1	1	1	1	1	1		
12	3	23876-030000	PLUG, R03	2	2	2	2	2	2		
13	2	119717-32100	COVER ASSY, PUMP	1	1	1	1	1	1		
14	3	119717-32080	COVER, OIL PUMP	1	1	1	1	1	1		
15	3	129900-32130	VALVE, RELIEF	1	1	1	1	1	1		
16	3	129001-32320	SPRING	1	1	1	1	1	1		
17	3	129001-32330	PLUG	1	1	1	1	1	1		
18	2	119717-32110	ROTOR, INNER	1	1	1	1	1	1		
19	2	119717-32120	ROTOR, OUTER	1	1	1	1	1	1		
20	2	119802-32130	SCREW, M6X16	8	8	8	8	8	8		
21	1	119717-01750	COVER, PUMP	1	1	1	1	1	1		
22	1	119660-01911	PIPE, KNOCK 6X17	4	4	4	4	4	4		
23	1	119624-32040	O-RING, P12.0	1	1	1	1	1	1		
24	1	119717-32050	O-RING, P17.0	3	3	3	3	3	3		
25	1	121850-51960	O-RING, FUEL PUMP	1	1	1	1	1	1		
26	1	26106-060122	BOLT, M6X 12 PLATED	1	1	1	1	1	1		
27	1	26106-060162	BOLT, M6X 16 PLATED	4	4	4	4	4	4		
28	1	26106-060402	BOLT, M6X 40 PLATED	4	4	4	4	4	4		
29	1	26106-060402	BOLT, M6X 40 PLATED	3	3	3	3	3	3		
30	1	26106-060602	BOLT, M6X 60 PLATED	7	7	7	7	7	7		
31	1	26106-060652	BOLT, M6X 65 PLATED	2	2	2	2	2	2		
32	1	26306-080002	NUT, M8	3	3	3	3	3	3		
33	1	977770-01212	GASKET, LIQUID	1	1	1	1	1	1		1
34	1	124160-01751	CAP, FILLER	1	1	1	1	1	1		
35	1	24311-000320	O-RING, 1AP32.0	1	1	1	1	1	1		
36	1	121023-01550	COVER		1	1	1	1	1		
37	1	24341-000240	O-RING, 1AS24.0		1	1	1	1	1		
38	1	26106-060162	BOLT, M6X 16 PLATED		2	2	2	2	2		

N:Old ←Yes/No→ New. Q:Old ←No/Yes→ New. R:Old ←Yes/Yes→ New. S:Old ←No/No→ New. W:Add. Z:Discontinued. F:Interchangeable by set. K:Q'ty Change

Copyright (C) YANMAR GLOBAL CS CO., LTD. All RightsReserved.

Fig.3. FLYWHEEL HOUSING & OIL SUMP

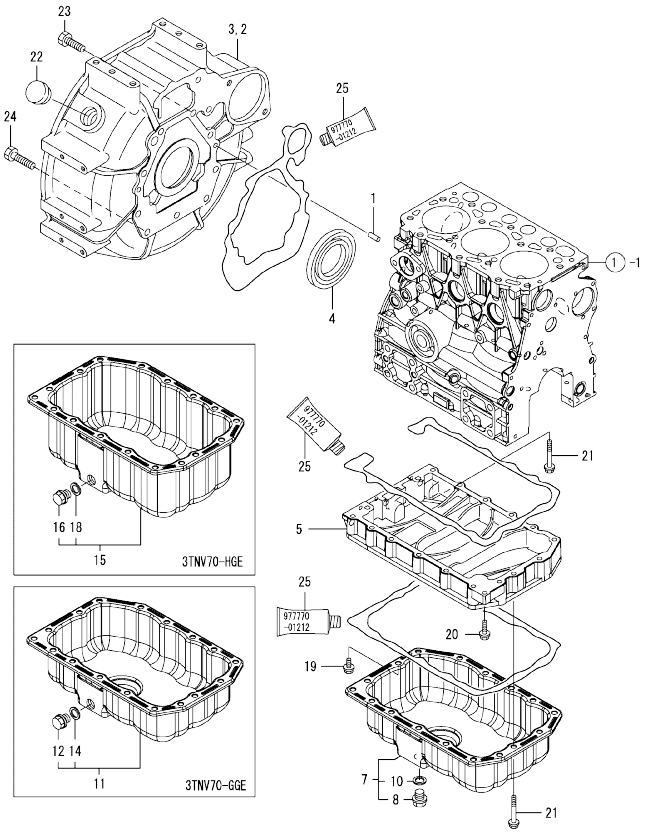

(A)=3TNV70-NBK
(B)=3TNV70-GGE
(C)=3TNV70-HGE
(D)=3TNV70-GGET
(E)=3TNV70-GGEC
(F)=3TNV70-HGET

No.	Lev.	Parts No.	Description	Q'ty (A)	(B)	(C)	(D)	(E)	(F)	I	R
1	1	129100-01580	PIN, PARALLEL 8X16	2	2	2	2	2	2		
2	1	119515-01601	HOUSING, FLYWHEEL	1							
3	1	119717-01610	HOUSING, FLYWHEEL		1	1	1	1	1		
4	1	124085-02220	SEAL, METAL HOUSING	1	1	1	1	1	1		
5	1	119515-01720	SPACER, OIL PAN	1	1	1	1	1	1		
7	1	119540-01770	OIL PAN ASSY	1							
8	2	105425-01690	PLUG, DRAIN M16	1							
10	2	22190-160002	WASHER, SEAL 16	1							
11	1	119515-01770	OIL PAN ASSY		1		1	1			
12	2	105425-01690	PLUG, DRAIN M16		1		1	1			
14	2	22190-160002	WASHER, SEAL 16		1		1	1			
15	1	119546-01770	OIL PAN ASSY			1			1		
16	2	105425-01690	PLUG, DRAIN M16			1			1		
18	2	22190-160002	WASHER, SEAL 16			1			1		
19	1	26106-060122	BOLT, M6X 12 PLATED	1	1	1	1	1	1		
20	1	26106-060252	BOLT, M6X 25 PLATED	1	1	1	1	1	1		
21	1	26106-060452	BOLT, M6X 45 PLATED	17	17	17	17	17	17		
22	1	119620-01750	CAP, WHEEL COVER	1	1	1	1	1	1		
23	1	26206-100252	BOLT, M10X 25 PLATED	7	8	8	8	8	8		
24	1	121120-01620	BOLT, M10X28	3	3	3	3	3	3		
25	1	977770-01212	GASKET, LIQUID	1	1	1	1	1	1		1

Remarks
(1)Optional parts.

N:Old ←Yes/No→ New. Q:Old ←No/Yes→ New. R:Old ←Yes/Yes→ New. S:Old ←No/No→ New. W:Add. Z:Discontinued. F:Interchangeable by set. K:Q'ty Change

Copyright (C) YANMAR GLOBAL CS CO., LTD. All RightsReserved.

Fig.4. CYLINDER HEAD & BONNET

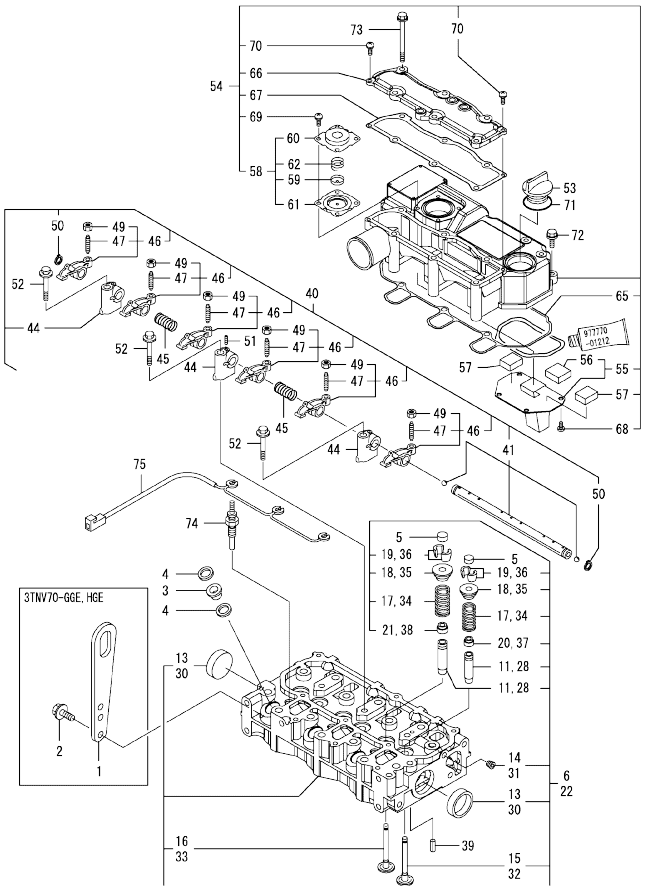

(A)=3TNV70-NBK
(B)=3TNV70-GGE
(C)=3TNV70-HGE
(D)=3TNV70-GGET
(E)=3TNV70-GGEC
(F)=3TNV70-HGET

No.	Lev.	Parts No.	Description	Q'ty (A)	(B)	(C)	(D)	(E)	(F)	I	R
1	1	129900-07900	LIFTER, ENGINE		1	1	1	1	1		
2	1	26106-080162	BOLT, M8X 16 PLATED		2	2	2	2	2		
3	1	129901-11450	PROTECTOR, NOZZLE	3	3	3	3	3	3		
4	1	119600-11460	GASKET, NOZZLE	6	6	6	6	6	6		
5	1	105010-11490	CAP, VALVE	6	6	6	6	6	6		
6	1	119515-11740	HEAD ASSY, CYLINDER	1	1		1	1			
11	2	119515-11800	GUIDE, VALVE	6	6		6	6			1
13	2	119285-11990	PLUG, 35	2	2		2	2			
14	2	23876-005000	PLUG, R005	1	1		1	1			
15	2	119515-11100	VALVE, INTAKE	3	3		3	3			
16	2	119515-11110	VALVE, EXHAUST	3	3		3	3			
17	2	119717-11131	SPRING, VALVE	6	6		6	6			
18	2	129508-11180	RETAINER, SPRING	6	6		6	6			
19	2	119717-11190	COTTER, VALVE	12	12		12	12			
20	2	119717-11340	SEAL, VALVE STEM	3	3		3	3			
21	2	119717-11350	SEAL, VALVE STEM	3	3		3	3			
22	1	119515-11750	HEAD ASSY, CYLINDER			1			1		
28	2	119515-11800	GUIDE, VALVE			6			6		1
30	2	119285-11990	PLUG, 35			2			2		
31	2	23876-005000	PLUG, R005			1			1		
32	2	119515-11100	VALVE, INTAKE			3			3		
33	2	119515-11110	VALVE, EXHAUST			3			3		
34	2	119717-11131	SPRING, VALVE			6			6		
35	2	129508-11180	RETAINER, SPRING			6			6		
36	2	119717-11190	COTTER, VALVE			12			12		
37	2	119717-11340	SEAL, VALVE STEM			3			3		
38	2	119717-11350	SEAL, VALVE STEM			3			3		
39	1	22351-060012	PIN, SPRING 6.0X12	2	2	2	2	2	2		
40	1	119515-11200	SUPPORT ASSY, ROCKER	1	1	1	1	1	1		
41	2	119515-11240	SHAFT ASSY, ARM	1	1	1	1	1	1		
44	2	119717-11260	SUPPORT, ROCKER ARM	3	3	3	3	3	3		
45	2	119515-11280	SPRING, SHAFT	2	2	2	2	2	2		
46	2	119717-11650	ARM ASSY, ROCKER INT	6	6	6	6	6	6		
47	3	129150-11230	SCREW, VALVE ADJUST	6	6	6	6	6	6		
49	3	129150-11750	NUT, M8XP1.0	6	6	6	6	6	6		
50	2	22242-000120	RING, 12	2	2	2	2	2	2		
51	2	26979-050162	SCREW, M5X16	1	1	1	1	1	1		
52	1	26106-080402	BOLT, M8X 40 PLATED	3	3	3	3	3	3		
53	1	124160-01751	CAP, FILLER	1	1	1	1	1	1		
54	1	119515-11380	BONNET ASSY, HEAD	1	1	1	1	1	1		
55	2	119717-03031	PLATE, BAFFLE	1	1	1	1	1	1		
56	3	119717-03070	BAFFLE, BREATHER	1	1	1	1	1	1		
57	2	119717-03070	BAFFLE, BREATHER	2	2	2	2	2	2		
58	2	119802-03100	DIAPHRAGM ASSY	1	1	1	1	1	1		
59	3	119802-03110	PLATE, DIAPHRAGM	1	1	1	1	1	1		
60	3	119802-03121	COVER, DIAPHRAGM	1	1	1	1	1	1		
61	3	119802-03131	DIAPHRAGM, BREATHER	1	1	1	1	1	1		
62	3	119802-03141	SPRING, DIAPHRAGM	1	1	1	1	1	1		
65	2	119515-11310	GASKET, BONNET	1	1	1	1	1	1		
66	2	119515-11320	COVER, BONNET	1	1	1	1	1	1		
67	2	119515-11330	GASKET, BONNET COVER	1	1	1	1	1	1		

Remarks
(1)Repair parts.

N:Old ←Yes/No→ New. Q:Old ←No/Yes→ New. R:Old ←Yes/Yes→ New. S:Old ←No/No→ New. W:Add. Z:Discontinued. F:Interchangeable by set. K:Q'ty Change

++ CONTINUE ++

Copyright (C) YANMAR GLOBAL CS CO., LTD. All RightsReserved.

Fig.4. CYLINDER HEAD & BONNET

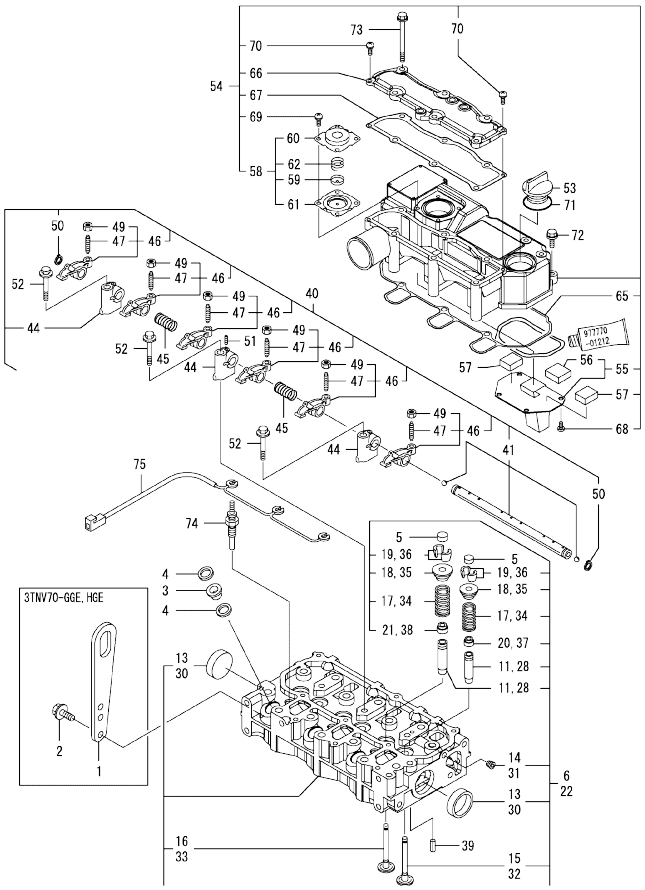

(A)=3TNV70-NBK
(B)=3TNV70-GGE
(C)=3TNV70-HGE
(D)=3TNV70-GGET
(E)=3TNV70-GGEC
(F)=3TNV70-HGET

No.	Lev.	Parts No.	Description	Q'ty (A)	(B)	(C)	(D)	(E)	(F)	I	R
68	2	22857-500100	SCREW, 5X10	4	4	4	4	4	4		
69	2	22857-500100	SCREW, 5X10	4	4	4	4	4	4		
70	2	22857-500160	SCREW, 5X16	2	2	2	2	2	2		
71	1	24311-000320	O-RING, 1AP32.0	1	1	1	1	1	1		
72	1	26106-060202	BOLT, M6X 20 PLATED	3	3	3	3	3	3		
73	1	26106-060752	BOLT, M6X 75 PLATED	6	6	6	6	6	6		
74	1	119717-77800	PLUG, GLOW	3	3	3	3	3	3		
75	1	119717-77820	CONNECTOR, GLOW PLUG	1	1	1	1	1	1		

Remarks
(1)Repair parts.

N:Old $\frac{\text{Yes}}{\text{No}}$ New. Q:Old $\frac{\text{No}}{\text{Yes}}$ New. R:Old $\frac{\text{Yes}}{\text{Yes}}$ New. S:Old $\frac{\text{No}}{\text{No}}$ New. W:Add. Z:Discontinued. F:Interchangeable by set. K:Q'ty Change

Copyright (C) YANMAR GLOBAL CS CO., LTD. All RightsReserved.

Fig.5. AIR CLEANER

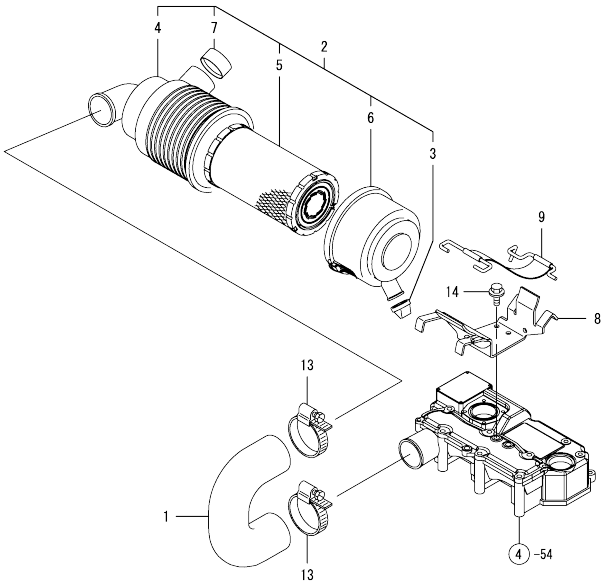

(A)=3TNV70-NBK
(B)=3TNV70-GGE
(C)=3TNV70-HGE
(D)=3TNV70-GGET
(E)=3TNV70-GGEC
(F)=3TNV70-HGET

No.	Lev.	Parts No.	Description	Q'ty (A)	(B)	(C)	(D)	(E)	(F)	I	R
1	1	119761-12020	HOSE, AIR INTAKE	1							
2	1	119761-12500	CLEANER ASSY, AIR	1							
3	2	119808-12540	VALVE, UNLODER	1							
4	2	119655-12550	BODY ASSY, CLEANER	1							
5	2	119655-12560	ELEMENT, AIR CLEANER	1							
6	2	105027-12570	COVER, AIR CLEANER	1							
7	2	105027-12580	RING, VALVE	1							
8	1	119761-12570	SUPPORT, CLEANER	1							
9	1	119865-12600	BAND ASSY, CLEANER	1							
13	1	23000-054000	CLAMP, 54	2							
14	1	26106-060142	BOLT, M6X 14 PLATED	3							

N:Old ←Yes/No→ New. Q:Old ←No/Yes→ New. R:Old ←Yes/Yes→ New. S:Old ←No/No→ New. W:Add. Z:Discontinued. F:Interchangeable by set. K:Q'ty Change

Copyright (C) YANMAR GLOBAL CS CO., LTD. All RightsReserved.

Fig.6. EXHAUST MANIFOLD

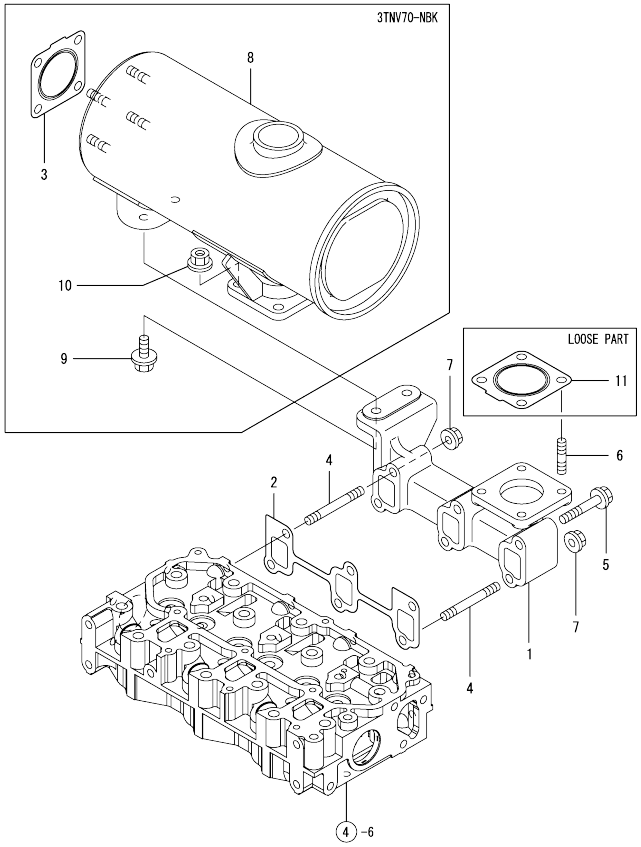

(A)=3TNV70-NBK (D)=3TNV70-GGET
(B)=3TNV70-GGE (E)=3TNV70-GGEC
(C)=3TNV70-HGE (F)=3TNV70-HGET

No.	Lev.	Parts No.	Description	Q'ty (A)	(B)	(C)	(D)	(E)	(F)	I	R
1	1	119717-13109	MANIFOLD, EXHAUST	1	1	1	1	1	1		
2	1	119717-13110	GASKET, MANIFOLD	1	1	1	1	1	1		
3	1	119515-13200	GASKET, SILENCER	1							
4	1	119717-13600	STUD, M8X50	2	2	2	2	2	2		
5	1	119802-13620	BOLT, M8X50	4	4	4	4	4	4		
6	1	119131-18320	STUD, M8X22	4	4	4	4	4	4		
7	1	26306-080002	NUT, M8	2	2	2	2	2	2		
8	1	119717-13550	SILENCER	1							
9	1	26106-080252	BOLT, M8X 25 PLATED	2							
10	1	26306-080002	NUT, M8	4							
11	1	119515-13200	GASKET, SILENCER	1	1	1	1	1	1		

N:Old ←Yes/No→ New. Q:Old ←No/Yes→ New. R:Old ←Yes/Yes→ New. S:Old ←No/No→ New. W:Add. Z:Discontinued. F:Interchangeable by set. K:Q'ty Change

Copyright (C) YANMAR GLOBAL CS CO., LTD. All RightsReserved.

Fig.7. CAMSHAFT & DRIVING GEAR

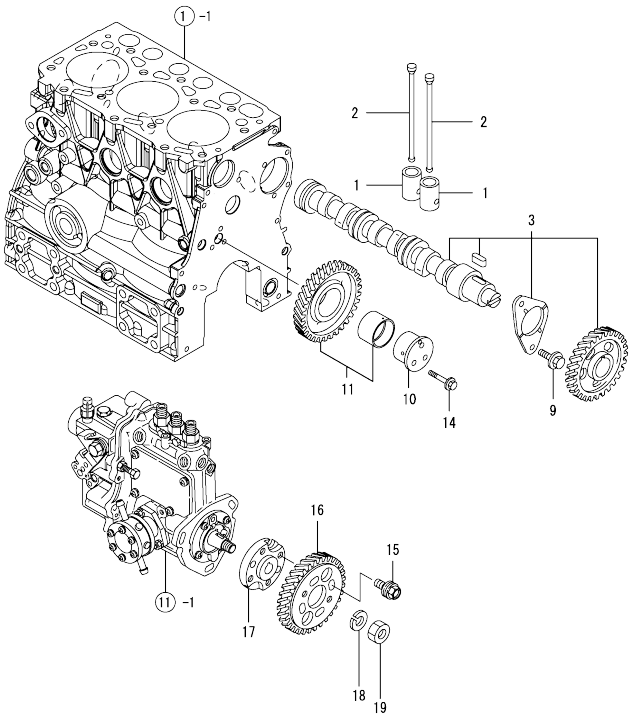

(A)=3TNV70-NBK (D)=3TNV70-GGET
(B)=3TNV70-GGE (E)=3TNV70-GGEC
(C)=3TNV70-HGE (F)=3TNV70-HGET

No.	Lev.	Parts No.	Description	Q'ty (A)	(B)	(C)	(D)	(E)	(F)	I	R
1	1	119620-14200	TAPPET	6	6	6	6	6	6		
2	1	119515-14400	ROD, PUSH	6	6	6	6	6	6		
3	1	119515-14580	CAMSHAFT ASSY	1	1	1	1	1	1		
9	1	26106-060122	BOLT, M6X 12 PLATED	2	2	2	2	2	2		
10	1	119717-25050	SHAFT, IDLE GEAR	1	1	1	1	1	1		
11	1	119717-25100	GEAR ASSY, IDLE	1	1	1	1	1	1		
14	1	26106-060352	BOLT, M6X 35 PLATED	3	3	3	3	3	3		
15	1	129150-25301	BOLT, INJECTION PUMP	4	4	4	4	4	4		
16	1	119717-25930	GEAR, PUMP	1	1	1	1	1	1		
17	1	119717-51150	FLANGE, CAMSHAFT	1	1	1	1	1	1		
18	1	22217-120000	WASHER, SPRING 12	1	1	1	1	1	1		
19	1	26716-120002	NUT, M12	1	1	1	1	1	1		

N:Old ←Yes/No→ New. Q:Old ←No/Yes→ New. R:Old ←Yes/Yes→ New. S:Old ←No/No→ New. W:Add. Z:Discontinued. F:Interchangeable by set. K:Q'ty Change

Copyright (C) YANMAR GLOBAL CS CO., LTD. All RightsReserved.

Fig.8. CRANKSHAFT & PISTON

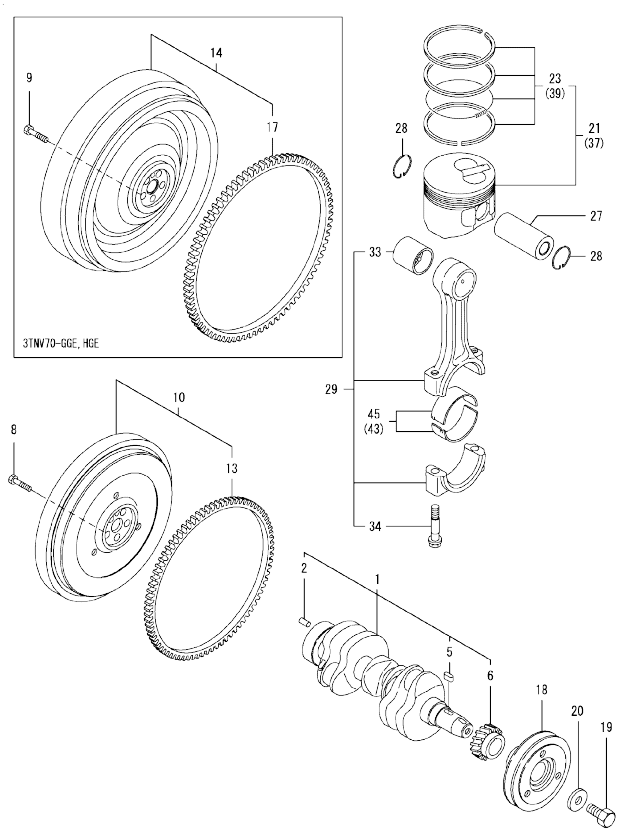

(A)=3TNV70-NBK
(B)=3TNV70-GGE
(C)=3TNV70-HGE
(D)=3TNV70-GGET
(E)=3TNV70-GGEC
(F)=3TNV70-HGET

No.	Lev.	Parts No.	Description	Q'ty (A)	(B)	(C)	(D)	(E)	(F)	I	R
1	1	119515-21700	CRANKSHAFT ASSY	1	1	1	1	1	1		
2	2	129100-01580	PIN, PARALLEL 8X16	1	1	1	1	1	1		
5	2	22512-040120	KEY, 4X 12	1	1	1	1	1	1		
6	2	119717-21200	GEAR, CRANKSHAFT	1	1	1	1	1	1		
8	1	119620-21500	BOLT, FLYWHEEL	5							
9	1	121111-21501	BOLT, FLYWHEEL		5	5	5	5	5		
10	1	119515-21580	FLYWHEEL ASSY	1							
13	2	124950-21600	GEAR, RING Z=97	1							
14	1	119746-21570	FLYWHEEL ASSY		1	1	1	1	1		
17	2	119865-21600	GEAR, RING Z=116		1	1	1	1	1		
18	1	119717-21650	V-PULLEY, CRANKSHAFT	1	1	1	1	1	1		
19	1	119621-21680	BOLT, FLANGE 12X1.25	1	1	1	1	1	1		
20	1	119620-21941	WASHER, 12	1	1	1	1	1	1		
21	1	119515-22080	PISTON ASSY	3	3	3	3	3	3		
23	2	119515-22500	RING SET, PISTON	3	3	3	3	3	3		
27	1	119515-22300	PIN, PISTON	3	3	3	3	3	3		
28	1	22252-000220	RING, 22	6	6	6	6	6	6		
29	1	119515-23000	ROD ASSY, CONNECTING	3	3	3	3	3	3		
33	2	119717-23910	METAL, PISTON PIN	3	3	3	3	3	3		2
34	2	119717-23200	BOLT, CONNECTING ROD	6	6	6	6	6	6		
37	1	119515-22900	PISTON ASSY, 0.25 OS	3	3	3	3	3	3		1
39	2	119515-22550	RING SET, PISTON .25	3	3	3	3	3	3		1
43	1	119515-23610	BEARING ASSY, 0.25	3	3	3	3	3	3		3
45	1	119515-23600	METAL ASSY,CRANK PIN	3	3	3	3	3	3		

Remarks
(1)Over-sized(O.S.=0.25) parts.
(2)Repair parts.
(3)Under-sized(U.S.=0.25) parts.

N:Old $\frac{\text{Yes}}{\text{No}}$ New. Q:Old $\frac{\text{No}}{\text{Yes}}$ New. R:Old $\frac{\text{Yes}}{\text{Yes}}$ New. S:Old $\frac{\text{No}}{\text{No}}$ New. W:Add. Z:Discontinued. F:Interchangeable by set. K:Q'ty Change

Copyright (C) YANMAR GLOBAL CS CO., LTD. All RightsReserved.

Fig.9. LUB. OIL SYSTEM

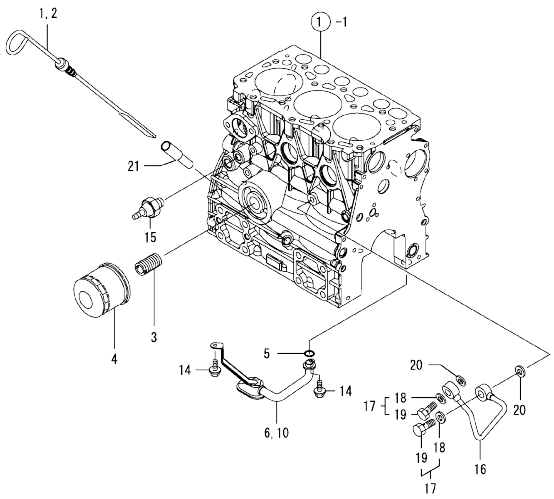

(A)=3TNV70-NBK (B)=3TNV70-GGE (C)=3TNV70-HGE (D)=3TNV70-GGET (E)=3TNV70-GGEC (F)=3TNV70-HGET

No.	Lev.	Parts No.	Description	Q'ty (A)	(B)	(C)	(D)	(E)	(F)	I	R
1	1	119515-34801	DIPSTICK, OIL	1	1		1	1			
2	1	119546-34801	DIPSTICK, OIL			1			1		
3	1	129100-35140	STUD	1	1	1	1	1	1		
4	1	119305-35170	FILTER ASSY, D68XL65	1	1	1	1	1	1		
5	1	119717-32060	O-RING, P15.0	1	1	1	1	1	1		
6	1	119515-35080	PIPE ASSY, OIL INLET	1	1		1	1			
10	1	119546-35080	PIPE ASSY, OIL INLET			1			1		
14	1	26106-060102	BOLT, M6X 10 PLATED	2	2	2	2	2	2		
15	1	114250-39450	SWITCH, HYDRAULIC	1	1	1	1	1	1		
16	1	119717-39210	PIPE, PUMP	1	1	1	1	1	1		
17	1	129005-59830	BOLT ASSY, JOINT M8	2	2	2	2	2	2		
18	2	22190-080002	WASHER, SEAL 8	2	2	2	2	2	2		
19	2	23857-030000	BOLT, JOINT 3	2	2	2	2	2	2		
20	1	22190-080002	WASHER, SEAL 8	2	2	2	2	2	2		
21	1	121520-34810	GUIDE, DIPSTICK	1	1	1	1	1	1		

Remarks
(1)Repair parts.

N:Old $\frac{\text{Yes}}{\text{No}}$ New. Q:Old $\frac{\text{No}}{\text{Yes}}$ New. R:Old $\frac{\text{Yes}}{\text{Yes}}$ New. S:Old $\frac{\text{No}}{\text{No}}$ New. W:Add. Z:Discontinued. F:Interchangeable by set. K:Q'ty Change

Copyright (C) YANMAR GLOBAL CS CO., LTD. All RightsReserved.

Fig.10. COOLING WATER SYSTEM

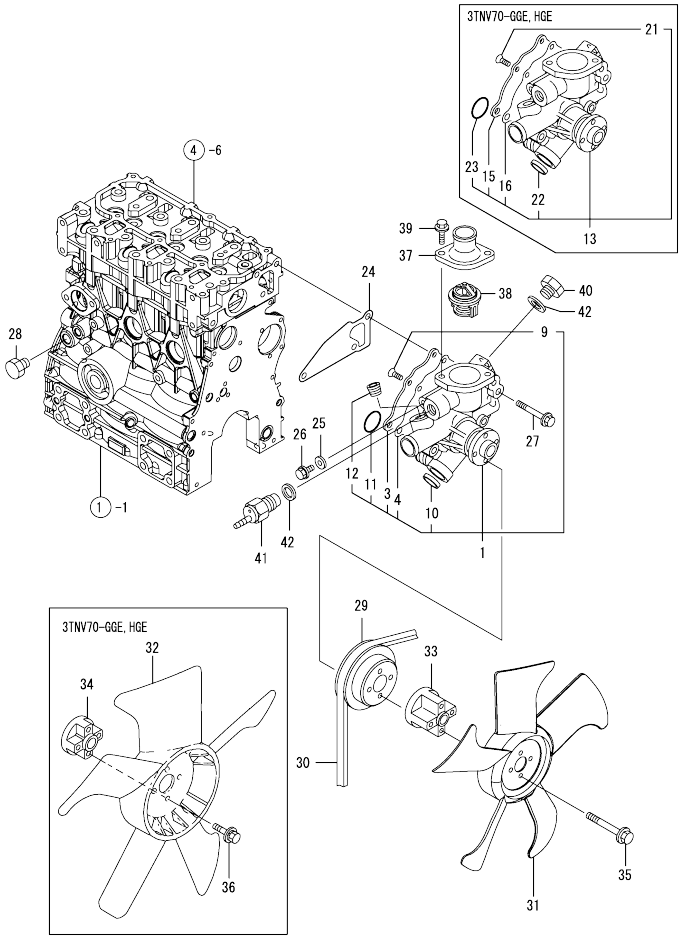

(A)=3TNV70-NBK (D)=3TNV70-GGET
(B)=3TNV70-GGE (E)=3TNV70-GGEC
(C)=3TNV70-HGE (F)=3TNV70-HGET

No.	Lev.	Parts No.	Description	Q'ty (A)	(B)	(C)	(D)	(E)	(F)	I	R
1	1	119540-42000	PUMP ASSY, WATER	1							
1-1	1	119C10-42000	PUMP ASSY, WATER	1						N	
	(A=E/ 90174)										
3	2	119515-42041	COVER, WATER PUMP	1							
4	2	119717-42031	GASKET, WATER PUMP	1							
9	2	26577-060122	SCREW, M6X12	4							
10	2	27241-250000	PLUG, 25	1							
11	2	119717-42320	O-RING, P26	1							
11-1	2	119C10-42320	O-RING, 2028	1						S	
	(A=E/ 90174)										
12	2	129916-49740	PLUG, R3/8	1							
13	1	119515-42001	PUMP ASSY, WATER		1	1	1	1	1		
13-1	1	119515-42002	PUMP ASSY, WATER		1	1	1	1	1	N	
			(B=E/ 86266) (C=E/ 87230) (D=E/ 86266) (E=E/ 86266) (F=E/ 87230)								
15	2	119515-42041	COVER, WATER PUMP		1	1	1	1	1		
16	2	119717-42031	GASKET, WATER PUMP		1	1	1	1	1		
21	2	26577-060122	SCREW, M6X12		4	4	4	4	4		
22	2	27241-250000	PLUG, 25		1	1	1	1	1		
23	2	119717-42320	O-RING, P26		1	1	1	1	1		
23-1	2	119C10-42320	O-RING, 2028		1	1	1	1	1	S	
			(B=E/ 86266) (C=E/ 87230) (D=E/ 86266) (E=E/ 86266) (F=E/ 87230)								
24	1	119515-42020	GASKET, WATER PUMP	1	1	1	1	1	1		
25	1	23414-080000	GASKET, 8X1.0	1	1	1	1	1	1		
26	1	26106-080122	BOLT, M8X 12 PLATED	1	1	1	1	1	1		
27	1	26106-080502	BOLT, M8X 50 PLATED	3	3	3	3	3	3		
28	1	171056-49120	PLUG, DRAIN R1/4	1	1	1	1	1	1		
29	1	119717-42350	V-PULLEY, PUMP D=100	1	1	1	1	1	1		
30	1	171001-42290	V-BELT, A35.5	1	1	1	1	1	1		
31	1	119258-44740	FAN, COOLING D=300	1							
32	1	119265-44740	FAN, COOLING D310X5F		1	1	1	1	1		
33	1	129457-44760	SPACER, FAN	1							
34	1	121267-44760	SPACER, FAN 18MM		1	1	1	1	1		
35	1	26106-060452	BOLT, M6X 45 PLATED	4							
36	1	26106-060302	BOLT, M6X 30 PLATED		4	4	4	4	4		
37	1	129350-49530	COVER, THERMOSTAT	1	1	1	1	1	1		
38	1	119717-49800	THERMOSTAT, 71C	1	1	1	1	1	1		
39	1	26106-080202	BOLT, M8X 20 PLATED	2	2	2	2	2	2		
40	1	121450-42450	PLUG, M16	1	1	1	1	1	1		
41	1	121250-44901	SWITCH, TEMPERATURE	1	1	1	1	1	1		
42	1	124465-44950	GASKET, 16	2	2	2	2	2	2		

N:Old ←Yes/No→ New. Q:Old ←No/Yes→ New. R:Old ←Yes/Yes→ New. S:Old ←No/No→ New. W:Add. Z:Discontinued. F:Interchangeable by set. K:Q'ty Change

Copyright (C) YANMAR GLOBAL CS CO., LTD. All RightsReserved.

Fig.11. FUEL INJECTION PUMP

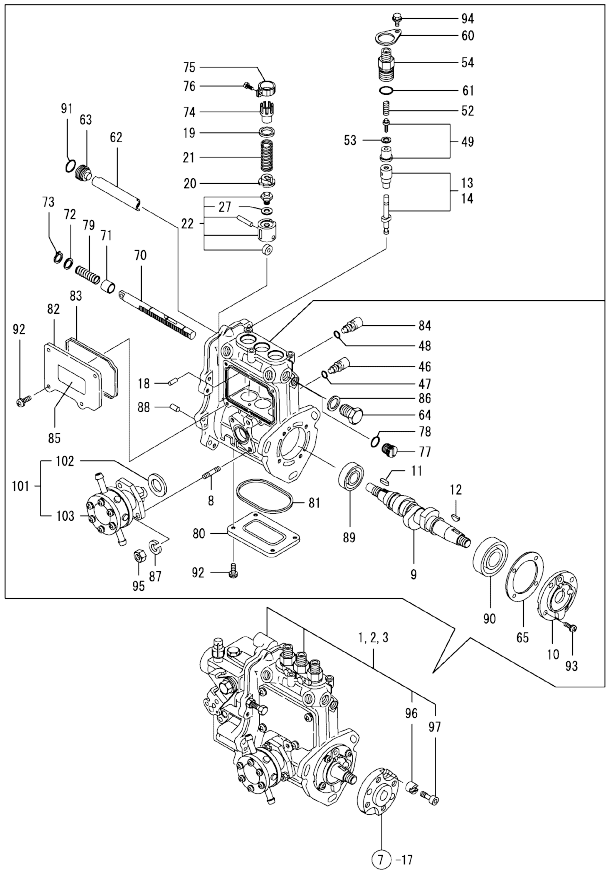

Remarks
(1)Governor(Fig.12) is incorporated in this Fuel Injection Pump(No.1, 2 & 3).

(A)=3TNV70-NBK (D)=3TNV70-GGET
(B)=3TNV70-GGE (E)=3TNV70-GGEC
(C)=3TNV70-HGE (F)=3TNV70-HGET

No.	Lev.	Parts No.	Description	Q'ty (A)	(B)	(C)	(D)	(E)	(F)	I	R
1	1	719540-51350	FIE ASSY	1							1
2	1	719546-51350	FIE ASSY		1		1	1			1
3	1	719546-51360	FIE ASSY			1			1		1
8	2	129155-51020	STUD	2	2	2	2	2	2		
9	2	119717-51030	CAMSHAFT, PUMP	1	1	1	1	1	1		
10	2	119717-51060	SUPPORT, CAMSHAFT	1	1	1	1	1	1		
11	2	119717-51070	KEY, PARALLEL	1	1	1	1	1	1		
12	2	122710-51090	KEY, FEATHER	1	1	1	1	1	1		
13	2	119515-51100	PLUNGER ASSY	3							
14	2	119415-51100	PLUNGER ASSY		3	3	3	3	3		
18	2	129155-51140	PIN, BARREL LOCK	3	3	3	3	3	3		
19	2	119717-51170	RETAINER	3	3	3	3	3	3		
20	2	119717-51180	RETAINER, SPRING	3	3	3	3	3	3		
21	2	119717-51190	SPRING, PLUNGER	3	3	3	3	3	3		
22	2	119717-51200	TAPPET ASSY, ROLLER	3	3	3	3	3	3		
27	3	129155-51600	SHIM SET, ADJUSTING	1	1	1	1	1	1		
46	2	158600-51270	STOPPER, TAPPET	3	3	3	3	3	3		
47	2	129155-51280	O-RING, S6	3	3	3	3	3	3		
48	2	129155-51280	O-RING, S6	1	1	1	1	1	1		
49	2	119717-51300	VALVE ASSY, DELIVERY	3	3	3	3	3	3		
52	2	119717-51330	SPRING, DELIVERY	3	3	3	3	3	3		
53	2	124550-51350	GASKET, DELIVERY	3	3	3	3	3	3		
54	2	158600-51441	VALVE ASSY, DELIVERY	3	3	3	3	3	3		
60	2	118400-51370	PLATE, LOCK	3	3	3	3	3	3		
61	2	24316-000150	O-RING, 4DP15.0	3	3	3	3	3	3		
62	2	129155-51400	PROTECTOR	1	1	1	1	1	1		
63	2	158600-51410	PLUG, DEFLIFTER M12	1	1	1	1	1	1		
64	2	158600-51420	PLUG, DEFLIFTER M16	1	1	1	1	1	1		
65	2	129155-51450	SHIM SET, ADJUSTING	1	1	1	1	1	1		
70	2	119717-51500	RACK, CONTROL	1	1	1	1	1	1		
71	2	129155-51521	BUSH, RACK	1	1	1	1	1	1		
72	2	129155-51530	SPACER, SPRING	1	1	1	1	1	1		
73	2	129155-51540	CIRCLIP, C	1	1	1	1	1	1		
74	2	129155-51550	PINION, CONTROL	3	3	3	3	3	3		
75	2	129100-51560	PINION	3	3	3	3	3	3		
76	2	129100-51570	SCREW, PINION M4	3	3	3	3	3	3		
77	2	158600-51570	PLUG, RACK	1	1	1	1	1	1		
78	2	129155-51580	O-RING	1	1	1	1	1	1		
79	2	129155-51591	SPRING, RACK ASSIST	1	1	1	1	1	1		
80	2	129155-51701	COVER, PUMP BOTTOM	1	1	1	1	1	1		
81	2	119717-51710	GASKET	1	1	1	1	1	1		
82	2	119717-51750	COVER, BODY SIDE	1	1	1	1	1	1		
83	2	119717-51760	GASKET	1	1	1	1	1	1		
84	2	158600-51790	STOPPER, RACK	1	1	1	1	1	1		
85	2	129156-51910	LABEL, FIE CAUTION	1	1	1	1	1	1		
86	2	22190-160002	WASHER, SEAL 16	1	1	1	1	1	1		
87	2	22217-060000	WASHER, SPRING 6	2	2	2	2	2	2		
88	2	22351-050010	PIN, SPRING 5.0X10	2	2	2	2	2	2		
89	2	24101-060034	BEARING, BALL 6003	1	1	1	1	1	1		
90	2	24101-063034	BEARING, BALL 6303	1	1	1	1	1	1		
91	2	119717-51420	O-RING	1	1	1	1	1	1		

N:Old $\xleftarrow[\text{No}]{\text{Yes}}$ New. Q:Old $\xleftarrow[\text{Yes}]{\text{No}}$ New. R:Old $\xleftarrow[\text{Yes}]{\text{Yes}}$ New. S:Old $\xleftarrow[\text{No}]{\text{No}}$ New. W:Add. Z:Discontinued. F:Interchangeable by set. K:Q'ty Change

++ CONTINUE ++

Copyright (C) YANMAR GLOBAL CS CO., LTD. All RightsReserved.

Fig.11. FUEL INJECTION PUMP

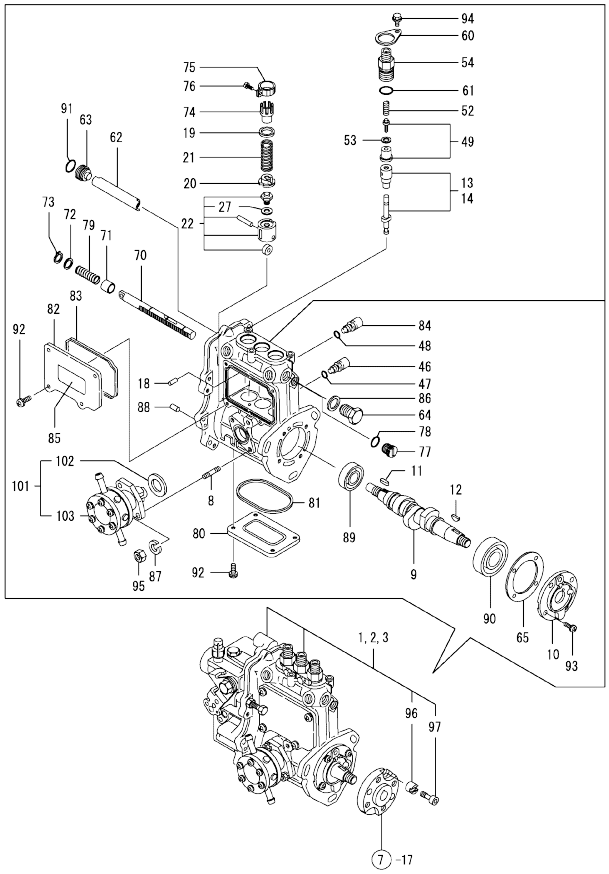

(A)=3TNV70-NBK (D)=3TNV70-GGET
(B)=3TNV70-GGE (E)=3TNV70-GGEC
(C)=3TNV70-HGE (F)=3TNV70-HGET

No.	Lev.	Parts No.	Description	Q'ty (A)	(B)	(C)	(D)	(E)	(F)	I	R
92	2	26022-050122	SCREW, M5X12	8	8	8	8	8	8		
93	2	26022-060162	SCREW, M6X16	4	4	4	4	4	4		
94	2	26106-050102	BOLT, M5X 10 PLATED	3	3	3	3	3	3		
95	2	26716-060002	NUT, M6	2	2	2	2	2	2		
96	2	119717-51480	COLLAR	1	1	1	1	1	1		
97	2	119717-51490	BOLT	1	1	1	1	1	1		
101	2	129100-52000	PUMP ASSY, FUEL FEED	1	1	1	1	1	1		
102	3	129155-52051	GASKET, PUMP COVER	1	1	1	1	1	1		
103	3	129100-52101	PUMP ASSY, FUEL FEED	1	1	1	1	1	1		

Remarks
(1)Governor(Fig.12) is incorporated in this Fuel Injection Pump(No.1, 2 & 3).

N:Old ←Yes/No→ New. Q:Old ←No/Yes→ New, R:Old ←Yes/Yes→ New. S:Old ←No/No→ New. W:Add. Z:Discontinued. F:Interchangeable by set. K:Q'ty Change

Copyright (C) YANMAR GLOBAL CS CO., LTD. All RightsReserved.

Fig.12. GOVERNOR

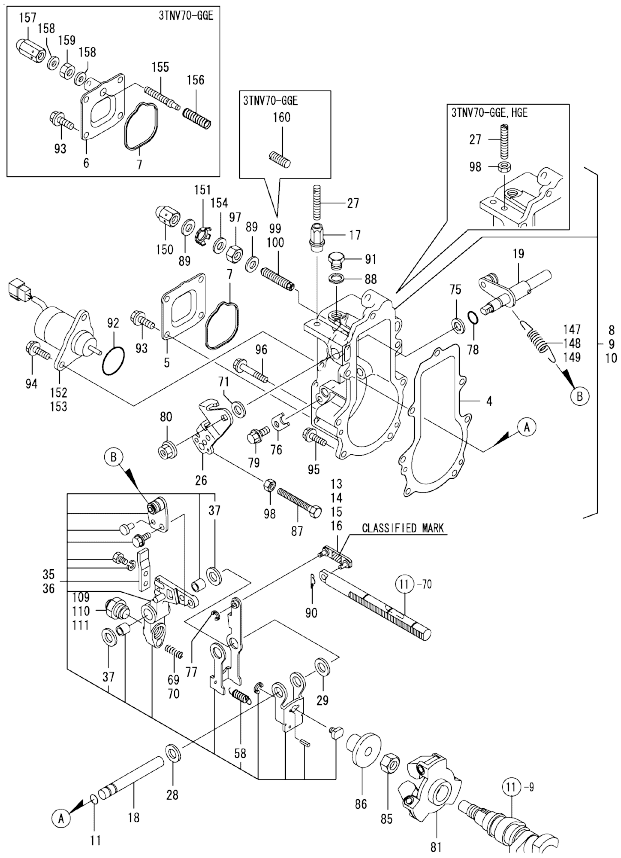

Remarks
(1)Selective parts.
Certain the classification mark, then place your order(Refer to illustration).
* This figure(Governor) is incorporated in the Fuel Injection Pump(Fig.11).

(A)=3TNV70-NBK (D)=3TNV70-GGET
(B)=3TNV70-GGE (E)=3TNV70-GGEC
(C)=3TNV70-HGE (F)=3TNV70-HGET

No.	Lev.	Parts No.	Description	Q'ty (A)	(B)	(C)	(D)	(E)	(F)	I	R
4	2	119717-61050	GASKET, CASE	1	1	1	1	1	1		
5	2	119717-61060	COVER, GOVERNOR CASE	1		1			1		
6	2	119746-61060	COVER, GOVERNOR CASE		1		1	1			
7	2	119717-61070	GASKET, COVER	1	1	1	1	1	1		
8	2	119717-61100	CASE ASSY, GOVERNOR	1							
9	2	119746-61100	CASE ASSY, GOVERNOR		1		1	1			
10	2	119742-61100	CASE ASSY, GOVERNOR			1			1		
11	3	129155-51280	O-RING, S6	1	1	1	1	1	1		
13	3	119717-61120	LINK, L=29.3 MARK 3	1	1	1	1	1	1		1
14	3	119717-61130	LINK, L=29.8 MARK 98	1	1	1	1	1	1		1
15	3	119717-61140	LINK, L=28.8 MARK 88	1	1	1	1	1	1		1
16	3	119717-61150	LINK, L=30.3 MARK 03	1	1	1	1	1	1		1
17	3	129209-61370	NUT, ARB M6	1	1	1	1	1	1		
18	3	129052-61390	SHAFT,GOVERNOR LEVER	1	1	1	1	1	1		
19	3	119717-61400	SHAFT ASSY, LEVER	1	1	1	1	1	1		
26	3	119515-61440	LEVER, CONTROL	1	1	1	1	1	1		
27	3	129155-61450	BOLT, LIMITER	1	2	2	2	2	2		
28	3	129156-61460	SHIM, LEVER T=0.6	1	1	1	1	1	1		
29	3	129155-61480	SPACER ASSY, LEVER	1	1	1	1	1	1		
35	3	119717-61500	LEVER ASSY, GOVERNOR	1		1			1		
36	3	119746-61500	LEVER ASSY, GOVERNOR		1		1	1			
37	4	174307-51700	SHIM SET, PLUNGER	2	2	2	2	2	2		
58	4	129486-61540	SPRING, LEVER	1	1	1	1	1	1		
69	3	129100-61650	SPRING, FUEL LIMITER	1		1			1		
70	3	129486-61650	SPRING, STARTING		1		1	1			
71	3	158552-61700	SHIM SET	1	1	1	1	1	1		
75	3	158552-61710	SHIM, T=1.0	1	1	1	1	1	1		
76	3	119660-61901	STOPPER, SHAFT	1	1	1	1	1	1		
77	3	22272-000030	RING, E- 3	1	1	1	1	1	1		
78	3	24341-000070	O-RING, 1AS7.0	1	1	1	1	1	1		
79	3	26106-060102	BOLT, M6X 10 PLATED	1	1	1	1	1	1		
80	3	26366-080002	NUT, M8	1	1	1	1	1	1		
81	2	119717-61200	WEIGHT ASSY,GOVERNOR	1	1	1	1	1	1		
85	2	119660-61300	NUT, SUPPORT	1	1	1	1	1	1		
86	2	129155-61341	SLEEVE	1	1	1	1	1	1		
87	2	129155-61460	BOLT, IDLE LIMIT	1	1	1	1	1	1		
88	2	22190-100002	WASHER, SEAL 10	1	1	1	1	1	1		
89	2	22190-120002	WASHER, SEAL 12	2	2	2	2	2	2		
90	2	22372-040000	PIN, SNAP 4	1	1	1	1	1	1		
91	2	23887-100002	PLUG, 10	1	1	1	1	1	1		
92	2	24341-000280	O-RING, 1AS28.0	1	1	1	1	1	1		
92-1	2	158552-61900	O-RING	1	1	1	1	1	1	N	
		(A=EXXXXX)	(B=EXXXXX) (C=EXXXXX) (D=EXXXXX)	(E=EXXXXX)				(F=EXXXXX)			
93	2	26106-060102	BOLT, M6X 10 PLATED	4	4	4	4	4	4		
94	2	26106-060142	BOLT, M6X 14 PLATED	2	2	2	2	2	2		
95	2	26106-060202	BOLT, M6X 20 PLATED	4	4	4	4	4	4		
96	2	26106-060452	BOLT, M6X 45 PLATED	3	3	3	3	3	3		
97	2	26736-120002	NUT, M12	1	1	1	1	1	1		
98	2	26756-060002	NUT, LOCK M6	1	2	2	2	2	2		
99	2	158601-61710	LIMITER ASSY, FUEL	1							
100	2	158601-61700	LIMITER ASSY, FUEL			1			1		

N:Old ←Yes/No→ New. Q:Old ←No/Yes→ New. R:Old ←Yes/Yes→ New. S:Old ←No/No→ New. W:Add. Z:Discontinued. F:Interchangeable by set. K:Q'ty Change

++ CONTINUE ++

Copyright (C) YANMAR GLOBAL CS CO., LTD. All RightsReserved.

Fig.12. GOVERNOR

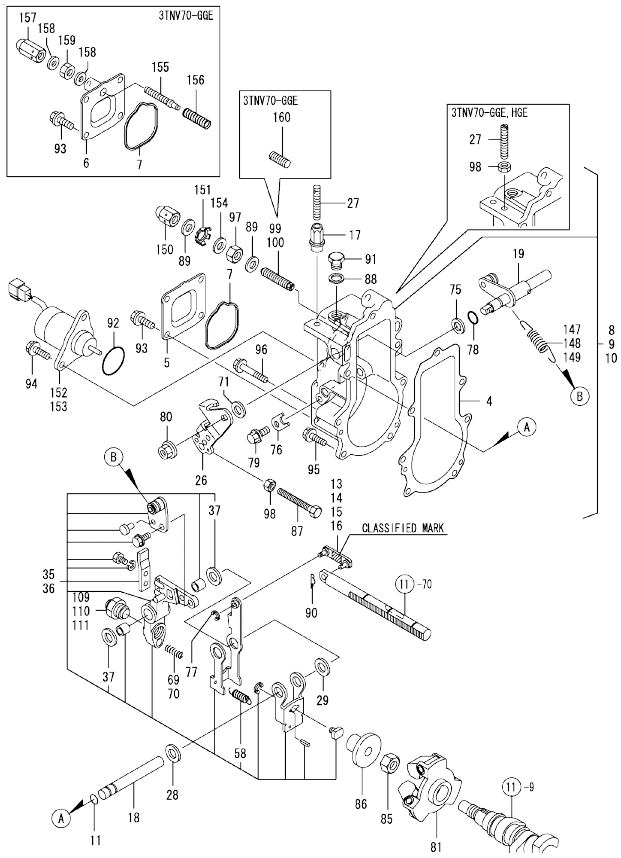

Remarks
(1)Selective parts.
Certain the classification mark, then place your order(Refer to illustration).
* This figure(Governor) is incorporated in the Fuel Injection Pump(Fig.11).

(A)=3TNV70-NBK
(B)=3TNV70-GGE
(C)=3TNV70-HGE
(D)=3TNV70-GGET
(E)=3TNV70-GGEC
(F)=3TNV70-HGET

No.	Lev.	Parts No.	Description	Q'ty (A)	(B)	(C)	(D)	(E)	(F)	I	R
109	2	119544-61550	ANGLEICH ASSY	1							
110	2	119746-61550	ANGLEICH ASSY		1		1	1			
111	2	119761-61560	ANGLEICH ASSY			1			1		
147	2	119718-61700	SPRING, GOVERNOR	1							
148	2	119746-61700	SPRING, GOVERNOR		1		1	1			
149	2	119742-61700	SPRING, GOVERNOR			1			1		
150	2	129209-61930	NUT	1	1	1	1	1	1		
151	2	129209-61970	LABEL	1	1	1	1	1	1		
152	2	119233-77932	SOLENOID, STOP	1							
153	2	119653-77950	SOLENOID, STOP		1	1	1	1	1		
154	2	23414-120016	GASKET, 12X1.0	1	1	1	1	1	1		
155	2	119645-61070	SCREW, ADJUSTER		1		1	1			
156	2	119746-61080	SPRING, IDLE SUB		1		1	1			
157	2	119600-66840	NUT, CAP		1		1	1			
158	2	22190-060003	SEAL WASER 6		2		2	2			
159	2	26756-060002	NUT, LOCK M6		1		1	1			
160	2	129155-61470	BOLT, FUEL CONTROL		1		1	1			

N:Old ←Yes/No→ New. Q:Old ←No/Yes→ New, R:Old ←Yes/Yes→ New, S:Old ←No/No→ New, W:Add, Z:Discontinued, F:Interchangeable by set, K:Q'ty Change

Copyright (C) YANMAR GLOBAL CS CO., LTD. All RightsReserved.

Fig.13. FUEL INJECTION VALVE

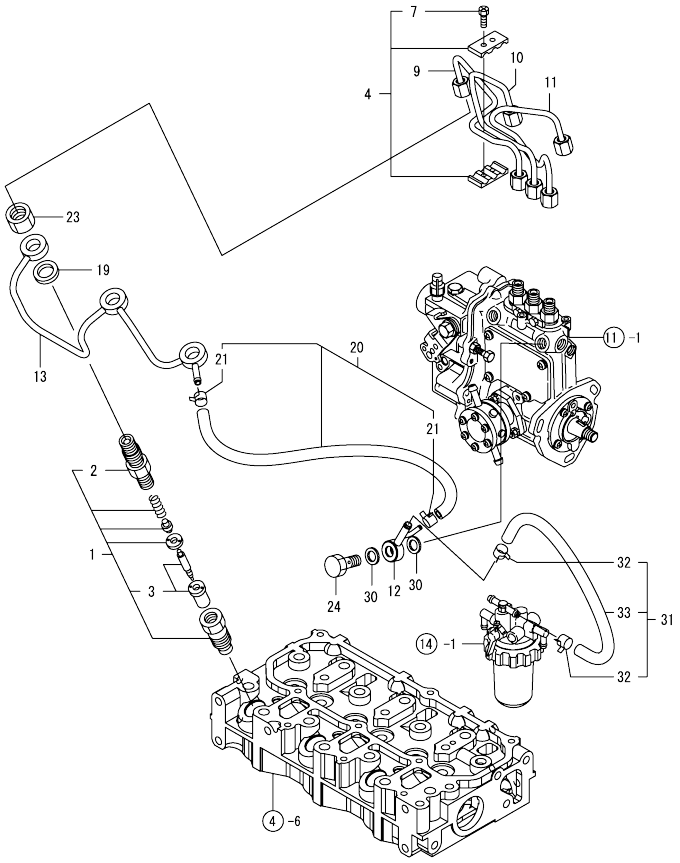

(A)=3TNV70-NBK (D)=3TNV70-GGET
(B)=3TNV70-GGE (E)=3TNV70-GGEC
(C)=3TNV70-HGE (F)=3TNV70-HGET

No.	Lev.	Parts No.	Description	Q'ty (A)	(B)	(C)	(D)	(E)	(F)	I	R
1	1	119515-53001	VALVE ASSY,INJECTION	3	3	3	3	3	3		
2	2	118200-53010	HOLDER, NOZZLE	3	3	3	3	3	3		
3	2	119515-53010	VALVE ASSY,INJECTION	3	3	3	3	3	3		
4	1	129150-59120	RETAINER, PIPE	1	1	1	1	1	1		
7	2	129150-59131	BOLT, M4X14	2	2	2	2	2	2		
9	1	119515-59810	PIPE, INJECTION NO.1	1	1	1	1	1	1		
10	1	119515-59820	PIPE, INJECTION NO.2	1	1	1	1	1	1		
11	1	119515-59830	PIPE, INJECTION NO.3	1	1	1	1	1	1		
12	1	119840-59570	JOINT, OVERFLOW	1	1	1	1	1	1		
13	1	119515-59540	PIPE ASSY, RETURN	1	1	1	1	1	1		
19	1	129901-59560	GASKET, FUEL RETURN	3	3	3	3	3	3		
20	1	119515-59570	HOSE ASSY, RETURN	1	1	1	1	1	1		
20-1	1	119540-59570	HOSE ASSY, RETURN	1	1	1	1	1	1	N	
	(A=E03185)	(B=E01738)	(C=E01781) (D=EA8358)	(E=*2005.03)				(F=EA5274)			
21	2	124066-59100	CLAMP, HOSE 8	2	2	2	2	2	2		
23	1	119620-59700	NUT, NOZZLE RETURN	3	3	3	3	3	3		
24	1	119813-59950	VALVE ASSY, CHECK	1	1	1	1	1	1		
30	1	22190-120002	WASHER, SEAL 12	2	2	2	2	2	2		
31	1	129210-59150	HOSE ASSY, FUEL L400	1	1	1	1	1	1		
32	2	124766-59050	CLAMP, HOSE 11.5	2	2	2	2	2	2		
33	2	105025-59530	HOSE, FUEL D13X400	1	1	1	1	1	1		

N:Old ←Yes/No→ New. Q:Old ←No/Yes→ New. R:Old ←Yes/Yes→ New. S:Old ←No/No→ New. W:Add. Z:Discontinued. F:Interchangeable by set. K:Q'ty Change

Copyright (C) YANMAR GLOBAL CS CO., LTD. All RightsReserved.

Fig.14. FUEL PIPING

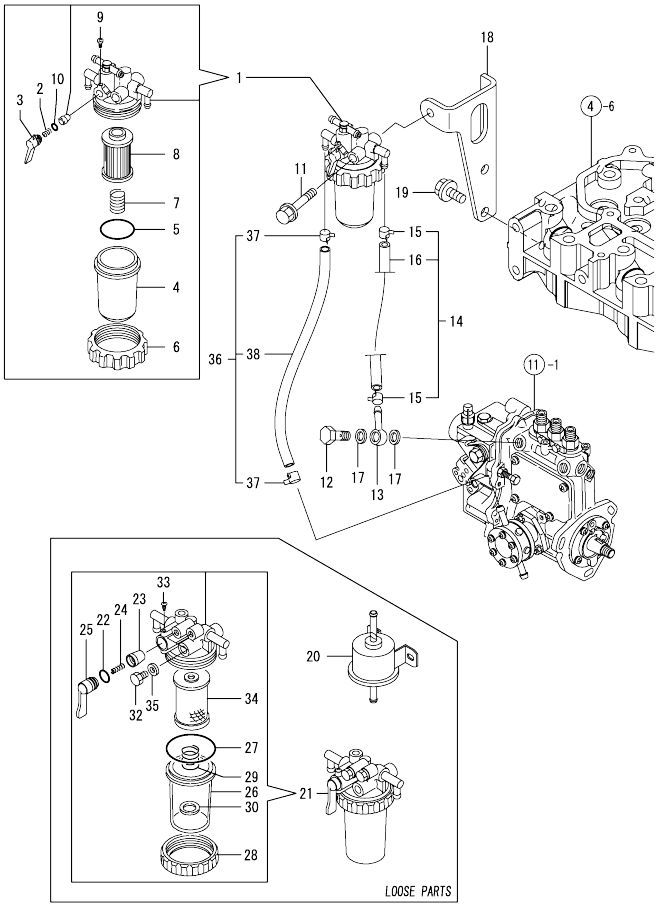

(A)=3TNV70-NBK (D)=3TNV70-GGET
(B)=3TNV70-GGE (E)=3TNV70-GGEC
(C)=3TNV70-HGE (F)=3TNV70-HGET

No.	Lev.	Parts No.	Description	Q'ty (A)	(B)	(C)	(D)	(E)	(F)	I	R
1	1	119833-55620	FILTER ASSY, FUEL	1	1	1	1	1	1		
2	2	104200-55330	SPRING, FUEL VALVE	1	1	1	1	1	1		
3	2	119810-55340	LEVER, FUEL	1	1	1	1	1	1		
4	2	121254-55510	CUP, FUEL STARINER	1	1	1	1	1	1		
5	2	102103-55520	O-RING, FILTER	1	1	1	1	1	1		
6	2	110250-55610	RING, CUP RETAINING	1	1	1	1	1	1		
7	2	121250-55620	SPRING, ELEMENT	1	1	1	1	1	1		
8	2	119810-55650	ELEMENT, FUEL FILTER	1	1	1	1	1	1		
9	2	104200-55750	SCREW, M4	1	1	1	1	1	1		
10	2	24311-240100	O-RING, 1AP10A	1	1	1	1	1	1		
11	1	26014-080702	BOLT, M8X 70	1	1	1	1	1	1		
12	1	103854-39140	BOLT, PIPE JOINT	1	1	1	1	1	1		
13	1	101304-59020	JOINT, PIPE 12	1	1	1	1	1	1		
14	1	129210-59080	HOSE ASSY, FUEL L270	1	1	1	1	1	1		
15	2	124766-59050	CLAMP, HOSE 11.5	2	2	2	2	2	2		
16	2	129136-59110	HOSE, D13/7.5X270	1	1	1	1	1	1		
17	1	22190-120002	WASHER, SEAL 12	2	2	2	2	2	2		
18	1	119717-55650	BRACKET, FILTER	1	1	1	1	1	1		
19	1	26106-080142	BOLT, M8X 14 PLATED	2	2	2	2	2	2		
20	1	119225-52102	PUMP, FUEL FEED	1							
21	1	129335-55700	SEPARATOR ASSY,WATER	1	1	1	1	1	1		
22	2	24311-240100	O-RING, 1AP10A	1	1	1	1	1	1		
23	2	104200-55321	VALVE, TAPER	1	1	1	1	1	1		
24	2	104200-55330	SPRING, FUEL VALVE	1	1	1	1	1	1		
25	2	104200-55341	HANDLE, COCK	1	1	1	1	1	1		
26	2	124064-55510	CUP, FUEL STARINER	1	1	1	1	1	1		
27	2	102103-55520	O-RING, FILTER	1	1	1	1	1	1		
28	2	110250-55610	RING, CUP RETAINING	1	1	1	1	1	1		
29	2	121257-55720	SPRING, ELEMENT	1	1	1	1	1	1		
30	2	121257-55731	FLOAT	1	1	1	1	1	1		
32	2	101720-55750	PLUG, HEXAGON M6	2	2	2	2	2	2		
33	2	104200-55750	SCREW, M4	1	1	1	1	1	1		
34	2	171081-55910	FILTER, FUEL 100M	1	1	1	1	1	1		
35	2	23418-060000	GASKET, 6X1.0	2	2	2	2	2	2		
36	1	129210-59150	HOSE ASSY, FUEL L400		1	1	1	1	1		
37	2	124766-59050	CLAMP, HOSE 11.5		2	2	2	2	2		
38	2	105025-59530	HOSE, FUEL D13X400		1	1	1	1	1		

N:Old ←Yes/No→ New. Q:Old ←No/Yes→ New. R:Old ←Yes/Yes→ New. S:Old ←No/No→ New. W:Add. Z:Discontinued. F:Interchangeable by set. K:Q'ty Change

Copyright (C) YANMAR GLOBAL CS CO., LTD. All RightsReserved.

Fig.15. STARTER MOTOR

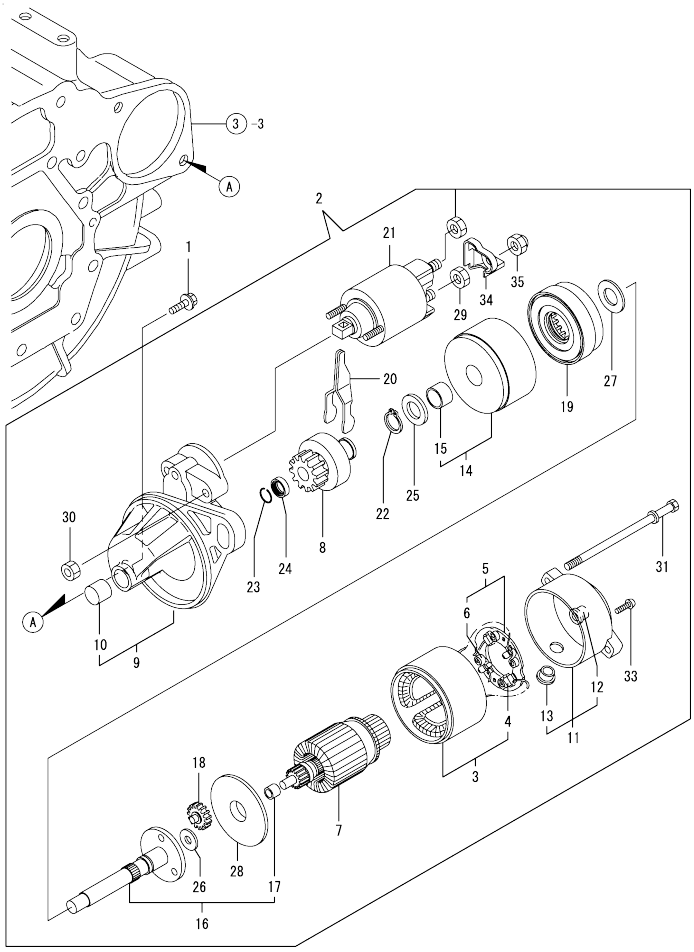

(A)=3TNV70-NBK
(B)=3TNV70-GGE
(C)=3TNV70-HGE
(D)=3TNV70-GGET
(E)=3TNV70-GGEC
(F)=3TNV70-HGET

No.	Lev.	Parts No.	Description	Q'ty (A)	(B)	(C)	(D)	(E)	(F)	I	R
1	1	26106-100252	BOLT, M10X 25 PLATED	2	2	2	2	2	2		
2	1	119515-77010	STARTER, P1.0	1	1	1	1	1	1		
3	2	X0281007680	YOKE ASSY	1	1	1	1	1	1		
4	3	X0280996180	STARTER KIT	2	2	2	2	2	2		
5	2	X0285105190	HOLDER ASSY	1	1	1	1	1	1		
6	3	X0285205030	SPRING	4	4	4	4	4	4		
7	2	X0282005871	ARMATURE ASSY	1	1	1	1	1	1		
8	2	X0283006960	CLUTCH	1	1	1	1	1	1		
9	2	X4284001590	HOUSING ASSY	1	1	1	1	1	1		
10	3	X9491050100	BEARING, NEEDLE	1	1	1	1	1	1		
11	2	X0285007030	FRAME ASSY	1	1	1	1	1	1		
12	3	X9491040990	BEARING	1	1	1	1	1	1		
13	3	X0280626010	COVER	1	1	1	1	1	1		
14	2	X0284105040	BEARING ASSY, SUB	1	1	1	1	1	1		
15	3	X9491034330	BEARING	1	1	1	1	1	1		
16	2	X0286105010	SHAFT ASSY, SUB	1	1	1	1	1	1		
17	3	X9491034320	BEARING	1	1	1	1	1	1		
18	2	X0286305010	GEAR	3	3	3	3	3	3		
19	2	X0286355010	GEAR	1	1	1	1	1	1		
20	2	X0287405140	LEVER	1	1	1	1	1	1		
21	2	X0534007800	SWITCH ASSY	1	1	1	1	1	1		
22	2	X9055715000	RING	1	1	1	1	1	1		
23	2	X9490721360	RING	1	1	1	1	1	1		
24	2	X0280210331	NUT	1	1	1	1	1	1		
25	2	X9490138110	WASHER	1	1	1	1	1	1		
26	2	X9490138090	WASHER	1	1	1	1	1	1		
27	2	X9490138100	WASHER	1	1	1	1	1	1		
28	2	X0284525010	PLATE	1	1	1	1	1	1		
29	2	X9490562360	NUT	1	1	1	1	1	1		
30	2	X9490560750	NUT	2	2	2	2	2	2		
31	2	X9490423520	BOLT, THROUGH	2	2	2	2	2	2		
33	2	X9490065670	SCREW, M4X6	2	2	2	2	2	2		
34	2	X0280335360	COVER, TERMINAL	1	1	1	1	1	1		
35	2	X1289510130	NUT	1	1	1	1	1	1		

N:Old ←Yes/No→ New. Q:Old ←No/Yes→ New. R:Old ←Yes/Yes→ New. S:Old ←No/No→ New. W:Add. Z:Discontinued. F:Interchangeable by set. K:Q'ty Change

Copyright (C) YANMAR GLOBAL CS CO., LTD. All RightsReserved.

Fig.16. GENERATOR

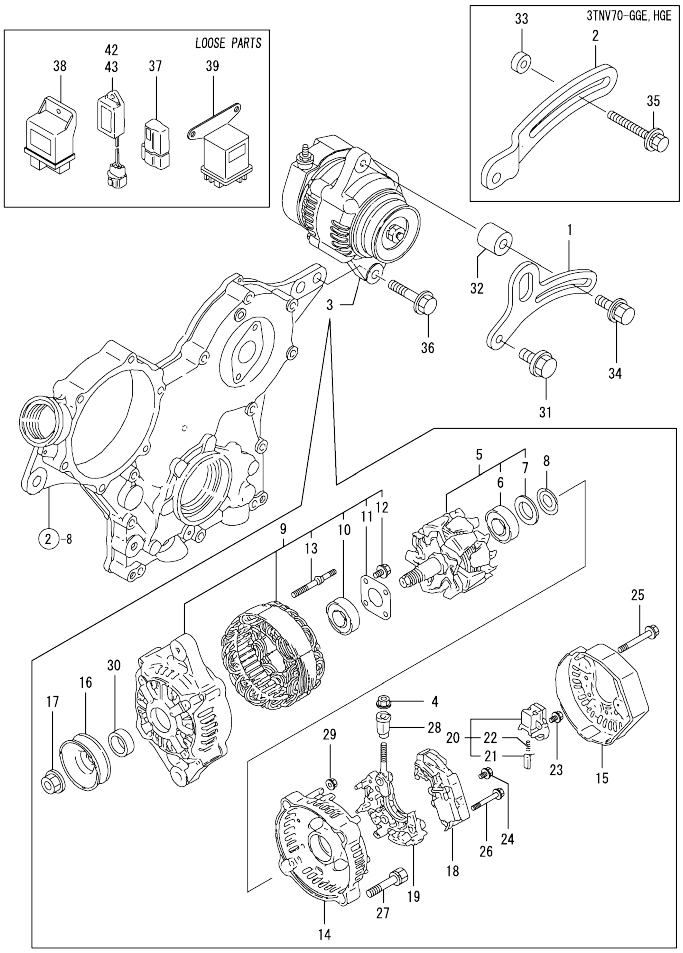

(A)=3TNV70-NBK
(B)=3TNV70-GGE
(C)=3TNV70-HGE
(D)=3TNV70-GGET
(E)=3TNV70-GGEC
(F)=3TNV70-HGET

No.	Lev.	Parts No.	Description	Q'ty (A)	(B)	(C)	(D)	(E)	(F)	I	R
1	1	119230-77330	ADJUSTER, BELT	1							
2	1	119717-77340	ADJUSTER, BELT		1	1	1	1	1		
3	1	129423-77200	GENERATOR, 12V-40A	1	1	1	1	1	1		
4	2	X9490561001	NUT	1	1	1	1	1	1		
5	2	119620-77380	ROTOR ASSY	1	1	1	1	1	1		
6	3	119620-79240	BEARING, BALL	1	1	1	1	1	1		
7	3	119620-79250	COVER, BEARING	1	1	1	1	1	1		
8	2	119620-79360	WASHER, THRUST	1	1	1	1	1	1		
9	2	119620-77421	FRAME ASSY, DRIVE	1	1	1	1	1	1		
10	3	119620-79200	BEARING, BALL	1	1	1	1	1	1		
11	3	119620-79210	PLATE, RETAINER	1	1	1	1	1	1		
12	3	119620-79220	SCREW	4	4	4	4	4	4		
13	3	119620-79230	STUD	2	2	2	2	2	2		
14	2	119620-77440	FRAME ASSY, REAR	1	1	1	1	1	1		
15	2	129240-79300	COVER	1	1	1	1	1	1		
16	2	119620-77461	PULLEY, GENERATOR	1	1	1	1	1	1		
17	2	119620-77471	NUT	1	1	1	1	1	1		
18	2	129423-77710	REGULATOR ASSY	1	1	1	1	1	1		
19	2	119620-79260	HOLDER ASSY	1	1	1	1	1	1		
20	2	119620-79270	HOLDER ASSY, BRUSH	1	1	1	1	1	1		
21	3	119620-77480	BRUSH ASSY, SUB	2	2	2	2	2	2		
22	3	119620-79280	SPRING	2	2	2	2	2	2		
23	2	119620-79290	SCREW	6	6	6	6	6	6		
24	2	119620-79300	SCREW	1	1	1	1	1	1		
25	2	119620-79310	BOLT	3	3	3	3	3	3		
26	2	119620-79320	SCREW, W/WASHER	2	2	2	2	2	2		
27	2	119620-79330	BOLT	2	2	2	2	2	2		
28	2	119620-79340	BUSH, INSULATION	1	1	1	1	1	1		
29	2	119620-79350	NUT	2	2	2	2	2	2		
30	2	119620-77490	COLLAR	1	1	1	1	1	1		
31	1	26106-080202	BOLT, M8X 20 PLATED	1	1	1	1	1	1		
32	1	124732-77340	SPACER, ADJUSTER	1							
33	1	119940-77270	SPACER, GENERATOR		1	1	1	1	1		
34	1	129972-77340	BOLT, ADJUST L=50	1							
35	1	119802-77340	BOLT, ADJUSTER L=40		1	1	1	1	1		
36	1	26106-100452	BOLT, M10X 45 PLATED	1	1	1	1	1	1		
37	1	119643-66900	DIODE	1	1	1	1	1	1		
38	1	119802-77200	RELAY, SAFETY	1							
39	1	119650-77910	RELAY ASSY, GLOW	1	1	1	1	1	1		
42	1	129155-77925	TIMER, SECTION 4	1							
43	1	129211-77920	TIMER, SECTION 1	1	1	1	1	1	1		

N:Old ←Yes/No→ New. Q:Old ←No/Yes→ New. R:Old ←Yes/Yes→ New. S:Old ←No/No→ New. W:Add. Z:Discontinued. F:Interchangeable by set. K:Q'ty Change

Copyright (C) YANMAR GLOBAL CS CO., LTD. All RightsReserved.

Fig.17. GASKET SET

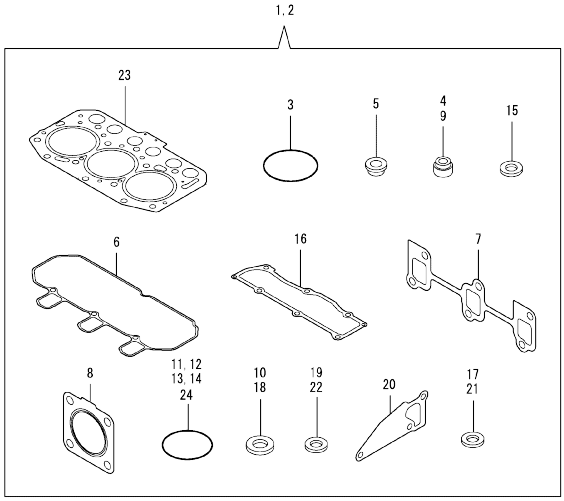

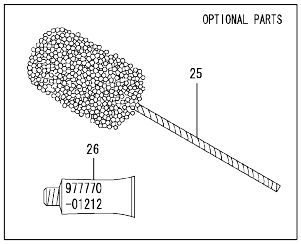

(A)=3TNV70-NBK
(B)=3TNV70-GGE
(C)=3TNV70-HGE
(D)=3TNV70-GGET
(E)=3TNV70-GGEC
(F)=3TNV70-HGET

No.	Lev.	Parts No.	Description	Q'ty (A)	(B)	(C)	(D)	(E)	(F)	I	R
1	1	719515-92610	GASKET SET	1							1
2	1	719515-92620	GASKET SET		1	1	1	1	1		1
3	2	121850-51960	O-RING, FUEL PUMP	1	1	1	1	1	1		
4	2	119717-11340	SEAL, VALVE STEM	3	3	3	3	3	3		
5	2	129901-11450	PROTECTOR, NOZZLE	3	3	3	3	3	3		
6	2	119515-11310	GASKET, BONNET	1	1	1	1	1	1		
7	2	119717-13110	GASKET, MANIFOLD	1	1	1	1	1	1		
8	2	119515-13200	GASKET, SILENCER	2	1	1	1	1	1		
9	2	119717-11350	SEAL, VALVE STEM	3	3	3	3	3	3		
10	2	22190-080002	WASHER, SEAL 8	4	4	4	4	4	4		
11	2	24311-000320	O-RING, 1AP32.0	2	2	2	2	2	2		
12	2	119717-32060	O-RING, P15.0	1	1	1	1	1	1		
13	2	119624-32040	O-RING, P12.0	1	1	1	1	1	1		
14	2	119717-32050	O-RING, P17.0	3	3	3	3	3	3		
15	2	119600-11460	GASKET, NOZZLE	6	6	6	6	6	6		
16	2	119515-11330	GASKET, BONNET COVER	1	1	1	1	1	1		
17	2	22190-160002	WASHER, SEAL 16	1	1	1	1	1	1		
18	2	22190-120002	WASHER, SEAL 12	4	4	4	4	4	4		
19	2	129901-59560	GASKET, FUEL RETURN	3	3	3	3	3	3		
20	2	119515-42020	GASKET, WATER PUMP	1	1	1	1	1	1		
21	2	23414-080000	GASKET, 8X1.0	1	1	1	1	1	1		
22	2	124465-44950	GASKET, 16	2	2	2	2	2	2		
23	2	119515-01330	GASKET, HEAD	1	1	1	1	1	1		
24	2	24341-000240	O-RING, 1AS24.0		1	1	1	1	1		
25	1	129400-92410	HONE, FLEX	1	1	1	1	1	1		1
26	1	977770-01212	GASKET, LIQUID	1	1	1	1	1	1		1

Remarks
(1)Optional parts.

N:Old $\frac{\text{Yes}}{\text{No}}$ New. Q:Old $\frac{\text{No}}{\text{Yes}}$ New. R:Old $\frac{\text{Yes}}{\text{Yes}}$ New. S:Old $\frac{\text{No}}{\text{No}}$ New. W:Add. Z:Discontinued. F:Interchangeable by set. K:Q'ty Change

Copyright (C) YANMAR GLOBAL CS CO., LTD. All RightsReserved.

Parts No. Index

Parts No.	Fig. No.	Ref. No.
101304-59020	14	13
101720-55750	14	32
102103-55520	14	5
		27
103854-39140	14	12
104200-55321	14	23
104200-55330	14	2
		24
104200-55341	14	25
104200-55750	14	9
		33
105010-11490	4	5
105025-59530	13	33
	14	38
105027-12570	5	6
105027-12580	5	7
105311-01090	1	6
105425-01690	3	8
		12
		16
110250-55610	14	6
		28
114250-39450	9	15
118200-53010	13	2
118400-51370	11	60
119131-18320	6	6
119225-52102	14	20
119230-77330	16	1
119233-77932	12	152
119258-44740	10	31
119265-44740	10	32
119285-01990	1	9
119285-11990	4	13
		30
119305-35170	9	4
119415-51100	11	14
119515-01200	1	30
119515-01330	1	31
	17	23
119515-01601	3	2
119515-01720	3	5
119515-01770	3	11
119515-11100	4	15
		32
119515-11110	4	16
		33
119515-11200	4	40
119515-11240	4	41
119515-11280	4	45
119515-11310	4	65

Parts No.	Fig. No.	Ref. No.
119515-11310	17	6
119515-11320	4	66
119515-11330	4	67
	17	16
119515-11380	4	54
119515-11740	4	6
119515-11750	4	22
119515-11800	4	11
		28
119515-13200	6	3
		11
	17	8
119515-14400	7	2
119515-14580	7	3
119515-21580	8	10
119515-21700	8	1
119515-22080	8	21
119515-22300	8	27
119515-22500	8	23
119515-22550	8	39
119515-22900	8	37
119515-23000	8	29
119515-23600	8	45
119515-23610	8	43
119515-34801	9	1
119515-35080	9	6
119515-42001	10	13
119515-42002	10	13 -1
119515-42020	10	24
	17	20
119515-42041	10	3
		15
119515-51100	11	13
119515-53001	13	1
119515-53010	13	3
119515-59540	13	13
119515-59570	13	20
119515-59810	13	9
119515-59820	13	10
119515-59830	13	11
119515-61440	12	26
119515-77010	15	2
119540-01770	3	7
119540-42000	10	1
119540-59570	13	20 -1
119544-61550	12	109
119546-01770	3	15
119546-34801	9	2
119546-35080	9	10
119600-11460	4	4

Parts No.	Fig. No.	Ref. No.
119600-11460	17	15
119600-66840	12	157
119620-01750	3	22
119620-01800	2	11
119620-02020	1	10
119620-14200	7	1
119620-21500	8	8
119620-21941	8	20
119620-59700	13	23
119620-77380	16	5
119620-77421	16	9
119620-77440	16	14
119620-77461	16	16
119620-77471	16	17
119620-77480	16	21
119620-77490	16	30
119620-79200	16	10
119620-79210	16	11
119620-79220	16	12
119620-79230	16	13
119620-79240	16	6
119620-79250	16	7
119620-79260	16	19
119620-79270	16	20
119620-79280	16	22
119620-79290	16	23
119620-79300	16	24
119620-79310	16	25
119620-79320	16	26
119620-79330	16	27
119620-79340	16	28
119620-79350	16	29
119620-79360	16	8
119621-21680	8	19
119623-01250	1	7
119624-32040	2	23
	17	13
119643-66900	16	37
119645-61070	12	155
119650-77910	16	39
119653-77950	12	153
119655-12550	5	4
119655-12560	5	5
119660-01911	2	22
119660-61300	12	85
119660-61901	12	76
119717-01501	2	1
119717-01521	2	8
119717-01570	2	3
119717-01590	2	4

Parts No.	Fig. No.	Ref. No.
119717-01610	3	3
119717-01750	2	21
119717-02410	1	13
119717-02930	1	27
119717-03031	4	55
119717-03070	4	56
		57
119717-11131	4	17
		34
119717-11190	4	19
		36
119717-11260	4	44
119717-11340	4	20
		37
	17	4
119717-11350	4	21
		38
	17	9
119717-11650	4	46
119717-13109	6	1
119717-13110	6	2
	17	7
119717-13550	6	8
119717-13600	6	4
119717-21200	8	6
119717-21650	8	18
119717-23200	8	34
119717-23910	8	33
119717-25050	7	10
119717-25100	7	11
119717-25930	7	16
119717-32050	2	24
	17	14
119717-32060	9	5
	17	12
119717-32080	2	14
119717-32100	2	13
119717-32110	2	18
119717-32120	2	19
119717-39210	9	16
119717-42031	10	4
		16
119717-42320	10	11
		23
119717-42350	10	29
119717-49800	10	38
119717-51030	11	9
119717-51060	11	10
119717-51070	11	11
119717-51150	7	17

Parts No. Index

Parts No.	Fig. No.	Ref. No.
119717-51170	11	19
119717-51180	11	20
119717-51190	11	21
119717-51200	11	22
119717-51300	11	49
119717-51330	11	52
119717-51420	11	91
119717-51480	11	96
119717-51490	11	97
119717-51500	11	70
119717-51710	11	81
119717-51750	11	82
119717-51760	11	83
119717-55650	14	18
119717-61050	12	4
119717-61060	12	5
119717-61070	12	7
119717-61100	12	8
119717-61120	12	13
119717-61130	12	14
119717-61140	12	15
119717-61150	12	16
119717-61200	12	81
119717-61400	12	19
119717-61500	12	35
119717-77340	16	2
119717-77800	4	74
119717-77820	4	75
119718-61700	12	147
119742-61100	12	10
119742-61700	12	149
119744-01521	2	9
119744-01590	2	5
119746-21570	8	14
119746-61060	12	6
119746-61080	12	156
119746-61100	12	9
119746-61500	12	36
119746-61550	12	110
119746-61700	12	148
119761-12020	5	1
119761-12500	5	2
119761-12570	5	8
119761-61560	12	111
119802-03100	4	58
119802-03110	4	59
119802-03121	4	60
119802-03131	4	61
119802-03141	4	62
119802-13620	6	5

Parts No.	Fig. No.	Ref. No.
119802-32130	2	20
119802-77200	16	38
119802-77340	16	35
119808-12540	5	3
119810-02940	1	32
119810-55340	14	3
119810-55650	14	8
119813-59950	13	24
119833-55620	14	1
119840-59570	13	12
119865-12600	5	9
119865-21600	8	17
119940-77270	16	33
119C10-42000	10	1 -1
119C10-42320	10	11 -1
		23 -1
121023-01550	2	36
121111-21501	8	9
121120-01620	3	24
121250-44901	10	41
121250-55620	14	7
121254-55510	14	4
121257-55720	14	29
121257-55731	14	30
121267-44760	10	34
121450-42450	10	40
121520-34810	9	21
121850-51960	2	25
	17	3
122710-51090	11	12
124060-01050	1	5
124064-55510	14	26
124066-59100	13	21
124085-02220	3	4
124160-01751	2	34
	4	53
124160-01910	1	8
124465-44950	10	42
	17	22
124550-51350	11	53
124732-77340	16	32
124766-59050	13	32
	14	15
		37
124950-21600	8	13
129001-32320	2	16
129001-32330	2	17
129005-59830	9	17
129052-61390	12	18
129100-01580	3	1

Parts No.	Fig. No.	Ref. No.
129100-01580	8	2
129100-35140	9	3
129100-51560	11	75
129100-51570	11	76
129100-52000	11	101
129100-52101	11	103
129100-61650	12	69
129136-59110	14	16
129150-11230	4	47
129150-11750	4	49
129150-25301	7	15
129150-59120	13	4
129150-59131	13	7
129155-51020	11	8
129155-51140	11	18
129155-51280	11	47
		48
	12	11
129155-51400	11	62
129155-51450	11	65
129155-51521	11	71
129155-51530	11	72
129155-51540	11	73
129155-51550	11	74
129155-51580	11	78
129155-51591	11	79
129155-51600	11	27
129155-51701	11	80
129155-52051	11	102
129155-61341	12	86
129155-61450	12	27
129155-61460	12	87
129155-61470	12	160
129155-61480	12	29
129155-77925	16	42
129156-51910	11	85
129156-61460	12	28
129209-61370	12	17
129209-61930	12	150
129209-61970	12	151
129210-59080	14	14
129210-59150	13	31
	14	36
129211-77920	16	43
129240-79300	16	15
129335-55700	14	21
129350-49530	10	37
129400-92410	17	25
129423-77200	16	3
129423-77710	16	18

Parts No.	Fig. No.	Ref. No.
129457-44760	10	33
129486-61540	12	58
129486-61650	12	70
129508-11180	4	18
		35
129900-07900	4	1
129900-32130	2	15
129901-11450	4	3
	17	5
129901-59560	13	19
	17	19
129916-49740	10	12
129972-77340	16	34
158552-61700	12	71
158552-61710	12	75
158552-61900	12	92 -1
158600-51270	11	46
158600-51410	11	63
158600-51420	11	64
158600-51441	11	54
158600-51570	11	77
158600-51790	11	84
158601-61700	12	100
158601-61710	12	99
171001-42290	10	30
171056-49120	10	28
171081-55910	14	34
174307-51700	12	37
22190-060003	12	158
22190-080002	9	18
		20
	17	10
22190-100002	12	88
22190-120002	12	89
	13	30
	14	17
	17	18
22190-160002	3	10
		14
		18
	11	86
	17	17
22217-060000	11	87
22217-120000	7	18
22242-000120	4	50
22252-000220	8	28
22272-000030	12	77
22351-050010	11	88
22351-060012	4	39
22372-040000	12	90

Parts No. Index

Parts No.	Fig. No.	Ref. No.
22512-040120	8	5
22857-500100	4	68
		69
22857-500160	4	70
23000-054000	5	13
23414-080000	10	25
	17	21
23414-120016	12	154
23418-060000	14	35
23857-030000	9	19
23876-005000	4	14
		31
23876-030000	2	12
23887-100002	12	91
24101-060034	11	89
24101-063034	11	90
24311-000320	2	35
	4	71
	17	11
24311-240100	14	10
		22
24316-000150	11	61
24341-000070	12	78
24341-000240	2	37
	17	24
24341-000280	12	92
26014-080702	14	11
26022-050122	11	92
26022-060162	11	93
26106-050102	11	94
26106-060102	9	14
	12	79
		93
26106-060122	2	26
	3	19
	7	9
26106-060142	5	14
	12	94
26106-060162	2	27
		38
26106-060202	4	72
	12	95
26106-060252	3	20
26106-060302	10	36
26106-060352	7	14
26106-060402	2	28
		29
26106-060452	3	21
	10	35
	12	96

Parts No.	Fig. No.	Ref. No.
26106-060602	2	30
26106-060652	2	31
26106-060752	4	73
26106-080122	10	26
26106-080142	14	19
26106-080162	4	2
26106-080202	10	39
	16	31
26106-080252	6	9
26106-080402	4	52
26106-080502	10	27
26106-100252	15	1
26106-100452	16	36
26206-100252	3	23
26306-080002	2	32
	6	7
		10
26366-080002	12	80
26577-060122	10	9
		21
26716-060002	11	95
26716-120002	7	19
26736-120002	12	97
26756-060002	12	98
		159
26979-050162	4	51
27241-120000	1	14
27241-250000	10	10
		22
719515-01560	1	1
719515-92610	17	1
719515-92620	17	2
719540-51350	11	1
719546-51350	11	2
719546-51360	11	3
719717-01500	2	6
719717-02900	1	15
719717-02910	1	35
719744-01500	2	7
977770-01212	2	33
	3	25
	17	26
X0280210331	15	24
X0280335360	15	34
X0280626010	15	13
X0280996180	15	4
X0281007680	15	3
X0282005871	15	7
X0283006960	15	8
X0284105040	15	14

Parts No.	Fig. No.	Ref. No.
X0284525010	15	28
X0285007030	15	11
X0285105190	15	5
X0285205030	15	6
X0286105010	15	16
X0286305010	15	18
X0286355010	15	19
X0287405140	15	20
X0534007800	15	21
X1289510130	15	35
X4284001590	15	9
X9055715000	15	22
X9490065670	15	33
X9490138090	15	26
X9490138100	15	27
X9490138110	15	25
X9490423520	15	31
X9490560750	15	30
X9490561001	16	4
X9490562360	15	29
X9490721360	15	23
X9491034320	15	17
X9491034330	15	15
X9491040990	15	12
X9491050100	15	10

Parts No.	Fig. No.	Ref. No.