YANMAR

PARTS CATALOG

0CR10-M85800EN

Last update Mar., 2016

PREFACE

1. This Parts Catalog carries all parts incorporated in YANMAR Model 3TNV70-GGEA engine manufactured since June, 2013.

2. Each illustration corresponds to the parts list on the following page.

3. When ordering parts, clearly write down the engine model and serial number, as well as the name and number of each part in your order sheet. This will help insure reliable delivery of the parts you have ordered.

Contents

0CR10-M85800

Fig. No.	Fig. Name
3TNV70-GGEA	
1.	CYLINDER BLOCK
2.	GEAR HOUSING
3.	FLYWHEEL HOUSING & OIL SUMP
4.	CYLINDER HEAD & BONNET
5.	AIR CLEANER
6.	EXHAUST MANIFOLD
7.	CAMSHAFT & DRIVING GEAR
8.	CRANKSHAFT & PISTON
9.	LUB. OIL SYSTEM
10.	COOLING WATER SYSTEM
11.	FUEL INJECTION PUMP
12.	GOVERNOR
13.	FUEL INJECTION VALVE
14.	FUEL FILTER
15.	STARTING MOTOR
16.	GENERATOR
17.	GASKET SET

Fig.1. CYLINDER BLOCK

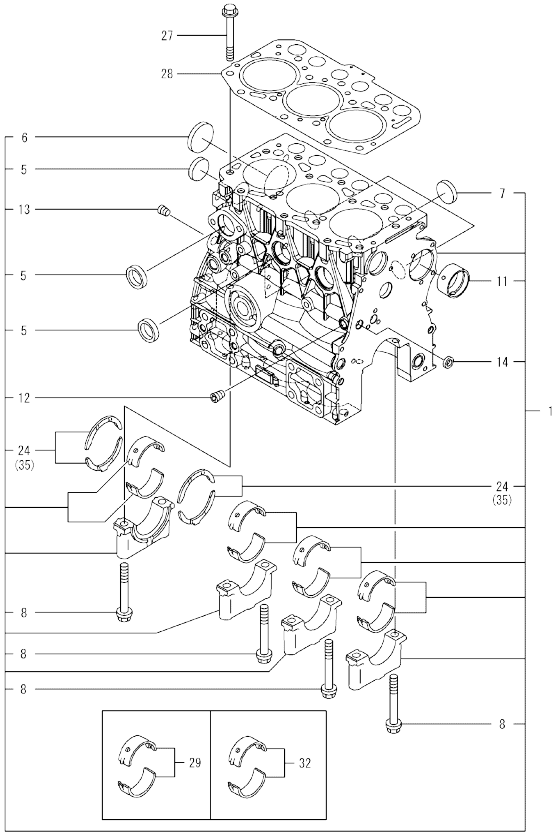

Remarks
(1)Spare parts.
(2)Under-sized(U.S.=0.25)part.
(3)Over-sized(O.S.=0.25)part.

(A)=3TNV70-GGEA (D)=
(B)= (E)=
(C)= (F)=

No.	Lev.	Parts No.	Description	Q'ty (A)	(B)	(C)	(D)	(E)	(F)	I	R
1	1	719515-01560	BLOCK ASSY, CYLINDER	1							
5	2	105311-01090	PLUG, 30	4							
6	2	119623-01250	PLUG, 45	1							
7	2	119285-01990	PLUG, 25	3							
8	2	119620-02020	BOLT, METAL CAP	8							
11	2	119717-02411	BUSH, CAMSHAFT	1							
12	2	124060-01050	PLUG, PT1/8	1							
13	2	124160-01910	PLUG, PT1/4	1							
14	2	27241-120000	PLUG, 12	1							
24	2	119717-02930	BEARING, THRUST	2							
27	1	119515-01200	BOLT, HEAD	14							
28	1	119515-01331	GASKET, HEAD	1							
29	1	719717-02901	BEARING, MAIN	4							1
32	1	719717-02911	BEARING, 0.25 US	4							2
35	1	119810-02941	BEARING, THRUST 0.25	2							3

N:Old ←Yes/No→ New. Q:Old ←No/Yes→ New, R:Old ←Yes/Yes→ New, S:Old ←No/No→ New, W:Add, Z:Discontinued. F:Interchangeable by set. K:Q'ty Change

Copyright (C) YANMAR CO., LTD. All RightsReserved.

Fig.2. GEAR HOUSING

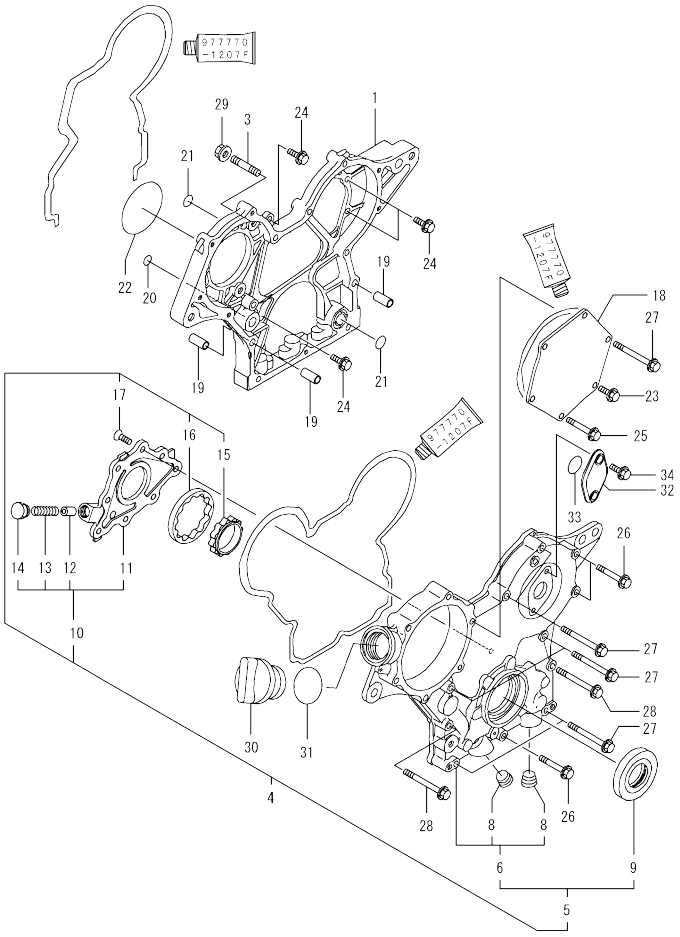

(A)=3TNV70-GGEA
(B)=
(C)=
(D)=
(E)=
(F)=

No.	Lev.	Parts No.	Description	Q'ty (A)	(B)	(C)	(D)	(E)	(F)	I	R
1	1	119717-01501	CASE, GEAR	1							
3	1	119717-01570	STUD	3							
4	1	119734-01580	CASE ASSY, GEAR	1							
5	2	719734-01510	CASE ASSY, GEAR	1							
6	3	119744-01521	COVER, GEAR CASE	1							
8	4	23876-030000	PLUG, R03	2							
9	3	119717-01800	SEAL, OIL	1							
10	2	119717-32100	COVER ASSY	1							
11	3	119717-32080	COVER	1							
12	3	129900-32130	VALVE, RELIEF	1							
13	3	129001-32320	SPRING	1							
14	3	129001-32330	PLUG	1							
15	2	119717-32110	ROTOR, INNER	1							
16	2	119717-32120	ROTOR, OUTER	1							
17	2	119802-32130	SCREW, M6X16	8							
18	1	119717-01750	COVER	1							
19	1	119660-01911	PIPE, KNOCK	4							
20	1	119624-32040	O-RING, P12.0	1							
21	1	119717-32050	O-RING, P17.0	3							
22	1	121850-51960	O-RING	1							
23	1	26106-060122	BOLT, M6X 12 PLATED	1							
24	1	26106-060162	BOLT, M6X 16 PLATED	4							
25	1	26106-060402	BOLT, M6X 40 PLATED	4							
26	1	26106-060402	BOLT, M6X 40 PLATED	3							
27	1	26106-060602	BOLT, M6X 60 PLATED	7							
28	1	26106-060652	BOLT, M6X 65 PLATED	2							
29	1	26306-080002	NUT, M8	3							
30	1	124160-01751	COVER, FILLER	1							
31	1	24311-000320	O-RING, 1AP32.0	1							
32	1	121023-01551	COVER	1							
33	1	24341-000240	O-RING, 1AS24.0	1							
34	1	26106-060162	BOLT, M6X 16 PLATED	2							

N:Old ←Yes/No→ New. Q:Old ←No/Yes→ New. R:Old ←Yes/Yes→ New. S:Old ←No/No→ New. W:Add. Z:Discontinued. F:Interchangeable by set. K:Q'ty Change

Copyright (C) YANMAR CO., LTD. All RightsReserved.

Fig.3. FLYWHEEL HOUSING & OIL SUMP

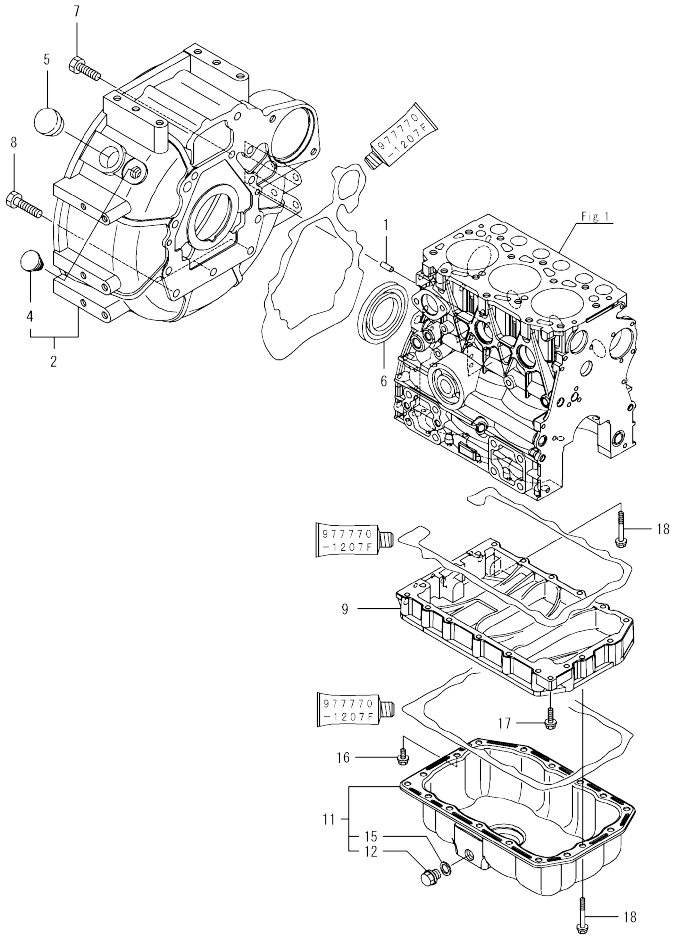

(A)=3TNV70-GGEA (D)=
(B)= (E)=
(C)= (F)=

No.	Lev.	Parts No.	Description	Q'ty (A)	(B)	(C)	(D)	(E)	(F)	I	R
1	1	129100-01580	PIN, M8X16	2							
2	1	119717-01611	HOUSING, FLYWHEEL	1							
4	2	119888-01850	PLUG, RUBBER	1							
5	1	119620-01750	CAP	1							
6	1	124085-02220	SEAL, OIL	1							
7	1	26206-100252	BOLT, M10X 25 PLATED	8							
8	1	26206-100302	BOLT, M10X 30 PLATED	3							
9	1	119515-01720	SPACER, OIL SUMP	1							
11	1	119515-01770	SUMP ASSY, OIL	1							
12	2	105425-01690	PLUG, 16	1							
15	2	22190-160002	WASHER, SEAL 16	1							
16	1	26106-060122	BOLT, M6X 12 PLATED	1							
17	1	26106-060252	BOLT, M6X 25 PLATED	1							
18	1	26106-060452	BOLT, M6X 45 PLATED	17							

N:Old ◄Yes/No► New. Q:Old ◄No/Yes► New. R:Old ◄Yes/Yes► New. S:Old ◄No/No► New. W:Add. Z:Discontinued. F:Interchangeable by set. K:Q'ty Change

Copyright (C) YANMAR CO., LTD. All RightsReserved.

Fig.4. CYLINDER HEAD & BONNET

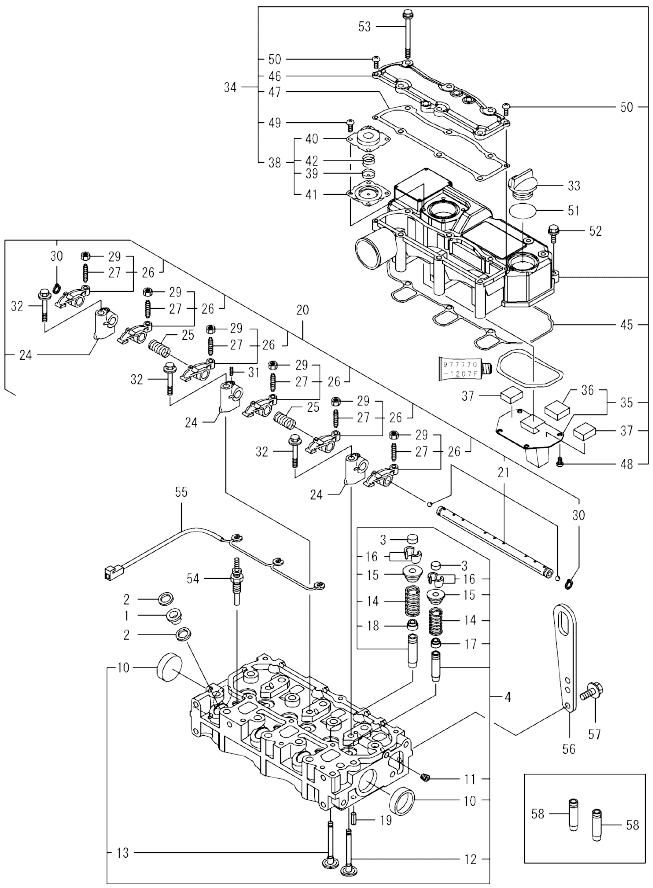

(A)=3TNV70-GGEA
(B)=
(C)=
(D)=
(E)=
(F)=

No.	Lev.	Parts No.	Description	Q'ty (A)	(B)	(C)	(D)	(E)	(F)	I	R
1	1	129901-11450	PROTECTOR, NOZZLE	3							
2	1	119600-11460	GASKET, NOZZLE	6							
3	1	105010-11490	CAP, VALVE	6							
4	1	119515-11740	HEAD ASSY, CYLINDER	1							
10	2	119285-11990	PLUG, 35	2							
11	2	23876-005000	PLUG, R005	1							
12	2	119515-11101	VALVE, INTAKE	3							
13	2	119515-11110	VALVE, EXHAUST	3							
14	2	119717-11131	SPRING, VALVE	6							
15	2	129508-11180	RETAINER, SPRING	6							
16	2	119717-11190	COTTER	12							
17	2	119717-11340	SEAL, VALVE STEM	3							
18	2	119717-11350	SEAL, VALVE STEM	3							
19	1	22351-060012	PIN, SPRING 6.0X12	2							
20	1	119515-11200	SUPPORT ASSY, ARM	1							
21	2	119515-11240	SHAFT ASSY, ROCKER	1							
24	2	119717-11260	SUPPORT, ROCKER ARM	3							
25	2	119515-11280	SPRING	2							
26	2	119717-11650	ARM, ROCKER	6							
27	3	129150-11230	SCREW, VALVE ADJUST	6							
29	3	129150-11750	NUT, M8	6							
30	2	22242-000120	RING, 12	2							
31	2	26979-050162	SCREW, M5X16	1							
32	1	26106-080402	BOLT, M8X 40 PLATED	3							
33	1	124160-01751	COVER, FILLER	1							
34	1	119515-11380	BONNET ASSY, HEAD	1							
35	2	119717-03031	PLATE	1							
36	3	119717-03070	BAFFLE, BREATHER	1							
37	2	119717-03070	BAFFLE, BREATHER	2							
38	2	119802-03100	DIAPHRAGM ASSY	1							
39	3	119802-03110	PLATE	1							
40	3	119802-03121	COVER, DIAPHRAGM	1							
41	3	119802-03131	DIAPHRAGM	1							
42	3	119802-03141	SPRING, DIAPHRAGM	1							
45	2	119515-11310	GASKET, BONNET	1							
46	2	119515-11320	COVER, BONNET	1							
47	2	119515-11330	GASKET	1							
48	2	22857-500100	SCREW, 5X10	4							
49	2	22857-500100	SCREW, 5X10	4							
50	2	22857-500160	SCREW, 5X16	2							
51	1	24311-000320	O-RING, 1AP32.0	1							
52	1	26106-060202	BOLT, M6X 20 PLATED	3							
53	1	26106-060752	BOLT, M6X 75 PLATED	6							
54	1	119717-77801	PLUG, GLOW	3							
55	1	119717-77820	CONNECTOR, GLOW PLUG	1							
56	1	129900-07900	LIFTER	1							
57	1	26106-080162	BOLT, M8X 16 PLATED	2							
58	1	119515-11800	GUIDE, VALVE	6							1

Remarks
(1)Spare parts.

N:Old ←Yes/No→ New. Q:Old ←No/Yes→ New. R:Old ←Yes/Yes→ New. S:Old ←No/No→ New. W:Add. Z:Discontinued. F:Interchangeable by set. K:Q'ty Change

Copyright (C) YANMAR CO., LTD. All RightsReserved.

Fig.5. AIR CLEANER

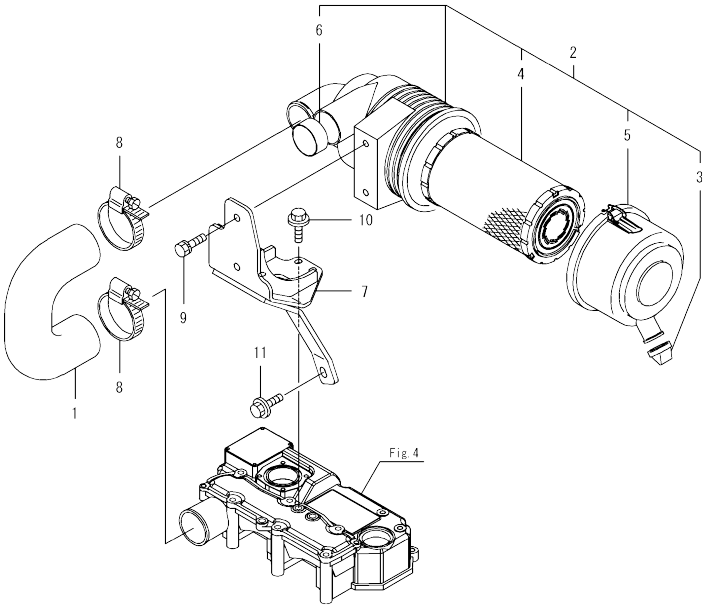

(A)=3TNV70-GGEA (D)=
(B)= (E)=
(C)= (F)=

No.	Lev.	Parts No.	Description	Q'ty (A)	(B)	(C)	(D)	(E)	(F)	I	R
1	1	119761-12020	PIPE, AIR INTAKE	1							
2	1	119515-12501	CLEANER ASSY, AIR	1							
3	2	119808-12540	VALVE, UNLOADER	1							
4	2	119655-12560	ELEMENT	1							
5	2	119336-12570	COVER ASSY	1							
6	2	105027-12580	RING	1							
7	1	119515-12600	BRACKET, AIR CLEANER	1							
8	1	23000-054000	CLAMP, 54	2							
9	1	26013-080222	BOLT, M8X 22	2							
10	1	26106-060142	BOLT, M6X 14 PLATED	3							
11	1	26106-080162	BOLT, M8X 16 PLATED	1							

N:Old ←Yes/No→ New. Q:Old ←No/Yes→ New. R:Old ←Yes/Yes→ New. S:Old ←No/No→ New. W:Add. Z:Discontinued. F:Interchangeable by set. K:Q'ty Change

Copyright (C) YANMAR CO., LTD. All RightsReserved.

Fig.6. EXHAUST MANIFOLD

(A)=3TNV70-GGEA
(B)=
(C)=
(D)=
(E)=
(F)=

No.	Lev.	Parts No.	Description	Q'ty (A)	(B)	(C)	(D)	(E)	(F)	I	R
1	1	119717-13109	MANIFOLD, EXHAUST	1							
2	1	119717-13110	GASKET	1							
3	1	119717-13600	STUD, M8X50	2							
4	1	119802-13620	BOLT, M8X50	4							
5	1	119131-18320	STUD, M8X22	4							
6	1	26306-080002	NUT, M8	2							
7	1	119515-13200	GASKET, SILENCER	1							1

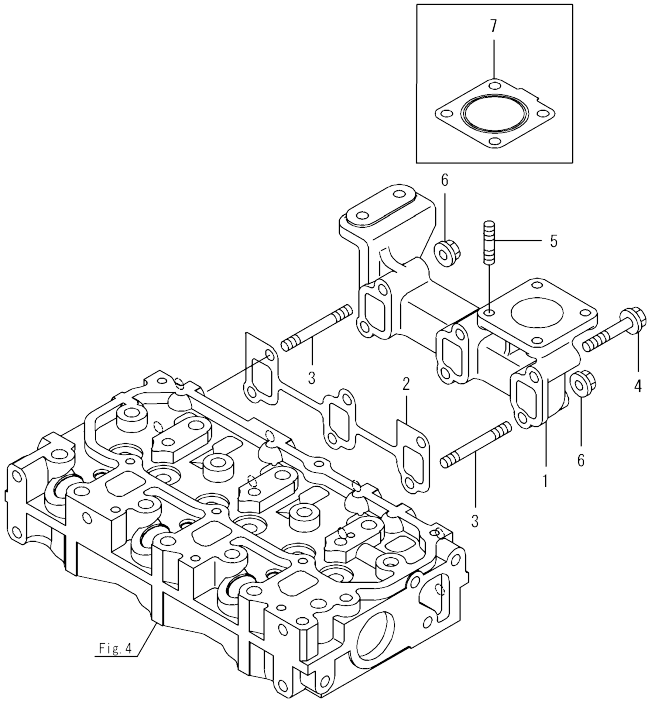

Remarks
(1)Loose parts.

N:Old ←Yes/No→ New. Q:Old ←No/Yes→ New. R:Old ←Yes/Yes→ New. S:Old ←No/No→ New. W:Add. Z:Discontinued. F:Interchangeable by set. K:Q'ty Change

Copyright (C) YANMAR CO., LTD. All RightsReserved.

Fig.7. CAMSHAFT & DRIVING GEAR

(A)=3TNV70-GGEA
(B)=
(C)=
(D)=
(E)=
(F)=

No.	Lev.	Parts No.	Description	Q'ty (A)	(B)	(C)	(D)	(E)	(F)	I	R
1	1	119620-14200	TAPPET	6							
2	1	119515-14400	ROD, PUSH	6							
3	1	119515-14581	CAMSHAFT ASSY	1							
9	1	26106-060122	BOLT, M6X 12 PLATED	2							
10	1	119717-25050	SHAFT, IDLE	1							
11	1	119717-25101	GEAR ASSY, IDLE	1							
14	1	26106-060352	BOLT, M6X 35 PLATED	3							
15	1	129150-25301	BOLT	4							
16	1	119717-25930	GEAR, PUMP	1							
17	1	119717-25911	BUSH, IDLE GEAR	1							1

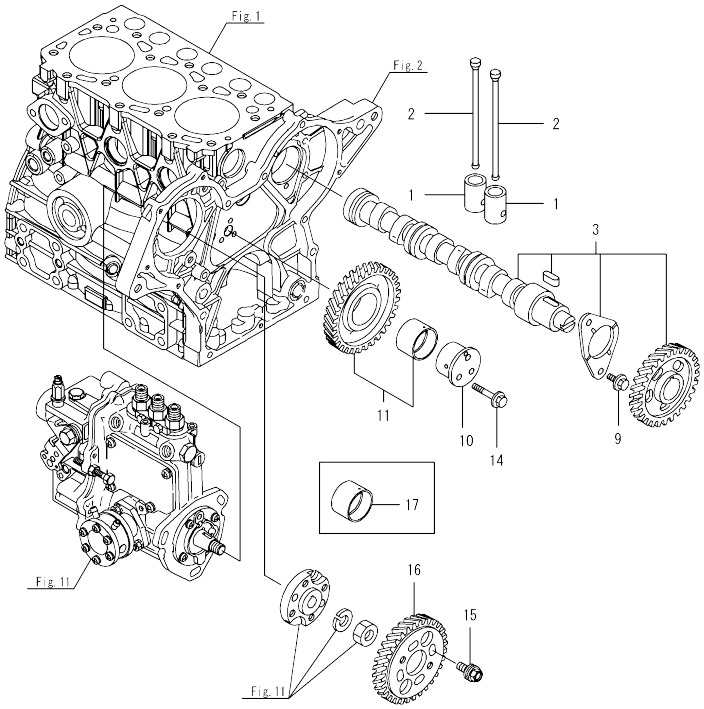

Remarks
(1)Spare parts.

N:Old ←Yes/No→ New. Q:Old ←No/Yes→ New. R:Old ←Yes/Yes→ New. S:Old ←No/No→ New. W:Add. Z:Discontinued. F:Interchangeable by set. K:Q'ty Change

Copyright (C) YANMAR CO., LTD. All RightsReserved.

Fig.8. CRANKSHAFT & PISTON

(A)=3TNV70-GGEA
(B)=
(C)=
(D)=
(E)=
(F)=

No.	Lev.	Parts No.	Description	Q'ty (A)	(B)	(C)	(D)	(E)	(F)	I	R
1	1	119515-21700	CRANKSHAFT ASSY	1							
2	2	129100-01580	PIN, M8X16	1							
5	2	119717-21200	GEAR, CRANKSHAFT	1							
6	2	22512-040120	KEY, 4X 12	1							
8	1	121111-21501	BOLT, FLYWHEEL	5							
9	1	119746-21570	FLYWHEEL ASSY	1							
12	2	119865-21600	GEAR, RING	1							
13	1	119717-21650	V-PULLEY	1							
14	1	119621-21681	BOLT, FLANGE 12X1.25	1							
15	1	119620-21941	WASHER	1							
16	1	119515-22080	PISTON ASSY	3							
18	2	119515-22500	RING SET, PISTON	3							
22	1	119515-22300	PIN, PISTON	3							
23	1	22252-000220	RING, 22	6							
24	1	119515-23000	ROD ASSY, CONNECTING	3							
28	2	119717-23200	BOLT, CONNECTING ROD	6							
29	2	119515-23601	BEARING, CRANK PIN	3							
31	1	119717-23910	BEARING, PISTON PIN	3							1
32	1	119515-23611	METAL ASSY, 0.25	3							2
34	1	119515-22900	PISTON ASSY, 0.25 OS	3							3
36	2	119515-22550	RING SET, 0.25 OS	3							3

Remarks
(1)Spare parts.
(2)Under-sized(U.S.=0.25)part.
(3)Over-sized(O.S.=0.25)part.

N:Old ←Yes/No→ New. Q:Old ←No/Yes→ New. R:Old ←Yes/Yes→ New. S:Old ←No/No→ New. W:Add. Z:Discontinued. F:Interchangeable by set. K:Q'ty Change

Copyright (C) YANMAR CO., LTD. All RightsReserved.

Fig.9. LUB. OIL SYSTEM

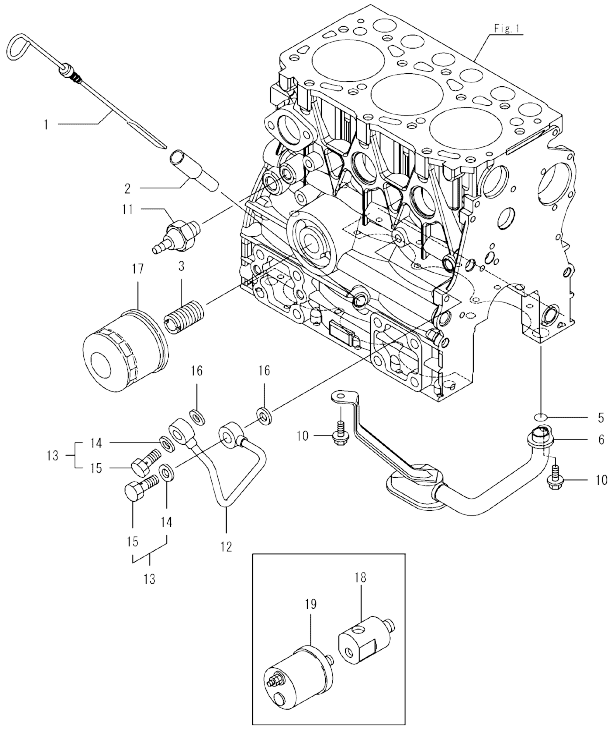

Remarks
(1)Spare parts.
(2)Loose parts.

(A)=3TNV70-GGEA (D)=
(B)= (E)=
(C)= (F)=

No.	Lev.	Parts No.	Description	Q'ty (A)	(B)	(C)	(D)	(E)	(F)	I	R
1	1	119515-34801	DIPSTICK, OIL	1							
2	1	121520-34810	GUIDE, DIPSTICK	1							
3	1	119717-35140	BOLT	1							
5	1	119717-32060	O-RING, P15.0	1							
6	1	119515-35080	PIPE ASSY, OIL INLET	1							
10	1	26106-060102	BOLT, M6X 10 PLATED	2							
11	1	114250-39450	SWITCH, 0.5KG	1							
12	1	119717-39210	PIPE, OIL	1							
13	1	129005-59830	BOLT ASSY, JOINT M8	2							
14	2	22190-080002	WASHER, SEAL 6	2							
15	2	23857-030000	BOLT, JOINT 3	2							
16	1	22190-080002	WASHER, SEAL 6	2							
17	1	119305-35170	FILTER ASSY, D68XL65	1							1
18	1	171375-39601	DAMPER, 1/8	1							2
19	1	119773-91501	SENSOR	1							2

N:Old ←Yes/No→ New. Q:Old ←No/Yes→ New, R:Old ←Yes/Yes→ New, S:Old ←No/No→ New, W:Add, Z:Discontinued. F:Interchangeable by set. K:Q'ty Change

Copyright (C) YANMAR CO., LTD. All RightsReserved.

Fig.10. COOLING WATER SYSTEM

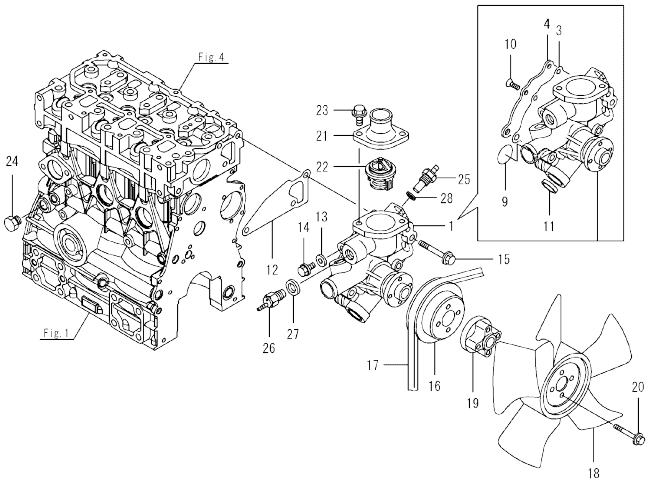

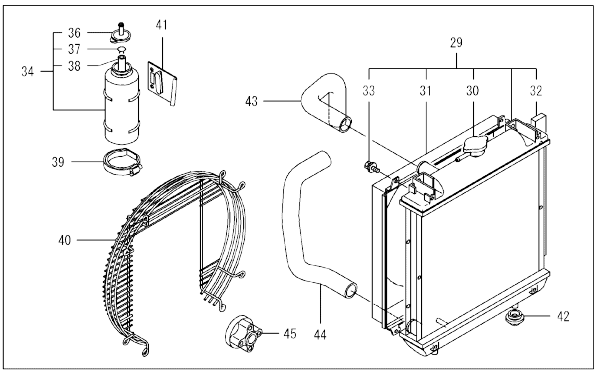

(A)=3TNV70-GGEA
(B)=
(C)=
(D)=
(E)=
(F)=

No.	Lev.	Parts No.	Description	Q'ty (A)	(B)	(C)	(D)	(E)	(F)	I	R
1	1	119515-42002	PUMP ASSY, CW	1							
3	2	119717-42031	GASKET	1							
4	2	119515-42041	COVER	1							
9	2	119C10-42320	O-RING, 2028	1							
10	2	26577-060122	SCREW, M6X12	4							
11	2	27241-250000	PLUG, 25	1							
12	1	119515-42020	GASKET, WATER PUMP	1							
13	1	23414-080000	GASKET, 8X1.0	1							
14	1	26106-080122	BOLT, M8X 12 PLATED	1							
15	1	26106-080502	BOLT, M8X 50 PLATED	3							
16	1	119717-42350	V-PULLEY, D=100	1							
17	1	171001-42290	V-BELT, A35.5	1							
18	1	119265-44740	FAN, D=310X5F	1							
19	1	129457-44760	SPACER, FAN	1							
20	1	26106-060452	BOLT, M6X 45 PLATED	4							
21	1	129350-49530-1	COVER, THERMOSTAT	1							
22	1	119717-49800	THERMOSTAT, 71	1							
23	1	26106-080202	BOLT, M8X 20 PLATED	2							
24	1	171056-49120	PLUG, DRAIN	1							
25	1	124250-49351	SENSOR	1							
26	1	121250-44901	SWITCH, 110	1							
27	1	124465-44950	GASKET, 16	1							
28	1	129150-49360	GASKET	1							
29	1	119717-44500	RADIATOR ASSY	1							1
30	2	129107-44590	CAP, RADIATOR	1							
31	2	119515-44600	SHROUD	1							
32	2	119515-44610	GASKET	2							
33	2	26014-060122	BOLT, M6X 12	4							
34	1	124450-44510	TANK ASSY, SUB	1							1
36	2	124450-44530	CAP	1							
37	2	124450-44560	RETAINER	1							
38	2	23061-070230	PIPE, 7X 230	1							
39	1	124450-44550	BAND	1							1
40	1	119802-44560	GUARD	1							1
41	1	121256-44600	BRACKET, SUB TANK	1							1
42	1	119255-44660	ABSORBER	2							1
43	1	119802-49010	PIPE, WATER	1							1
44	1	119802-49020	PIPE, WATER	1							1
45	1	129457-44760	SPACER, FAN	1							1

Remarks
(1)Loose parts.

N:Old ←Yes/No→ New. Q:Old ←No/Yes→ New. R:Old ←Yes/Yes→ New. S:Old ←No/No→ New. W:Add. Z:Discontinued. F:Interchangeable by set. K:Q'ty Change

Copyright (C) YANMAR CO., LTD. All RightsReserved.

Fig.11. FUEL INJECTION PUMP

(A)=3TNV70-GGEA
(B)=
(C)=
(D)=
(E)=
(F)=

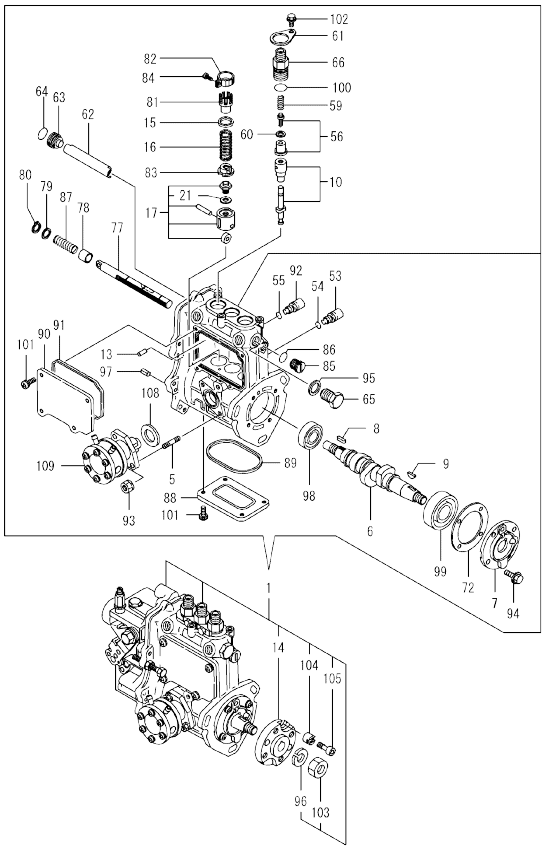

No.	Lev.	Parts No.	Description	Q'ty (A)	(B)	(C)	(D)	(E)	(F)	I	R
1	1	719546-51350	PUMP ASSY, INJECTION	1							1
5	2	129155-51020	STUD	2							
6	2	119717-51030	CAMSHAFT	1							
7	2	119717-51060	SUPPORT, CAMSHAFT	1							
8	2	119717-51070	KEY	1							
9	2	122710-51090	KEY	1							
10	2	119415-51100	PLUNGER ASSY	3							
13	2	129155-51140	PIN	3							
14	2	119717-51150	FLANGE	1							
15	2	158600-51170	RETAINER, SPRING	3							
16	2	119717-51190	SPRING, PLUNGER	3							
17	2	119717-51200	TAPPET ASSY	3							
21	3	129155-51600	SHIM SET, ADJUSTING	3							
53	2	158600-51270	STOPPER, TAPPET	3							
54	2	129155-51280	O-RING, S6	3							
55	2	129155-51280	O-RING, S6	1							
56	2	119717-51300	VALVE ASSY, DELIVERY	3							
59	2	119717-51330	SPRING, DELIVERY	3							
60	2	124550-51350	GASKET, DELIVERY	3							
61	2	119125-51370	RETAINER	3							
62	2	129155-51400	DEFLECTOR	1							
63	2	158600-51410	PLUG, DEFLECTOR	1							
64	2	119717-51420	O-RING	1							
65	2	158600-51420	PLUG, DEFLECTOR	1							
66	2	158600-51442	VALVE ASSY, DELIVERY	3							
72	2	129155-51450	SHIM SET, ADJUSTING	1							
77	2	119717-51500	RACK, CONTROL	1							
78	2	119025-51520	BUSH,RACK	1							
79	2	129155-51530	SPACER	1							
80	2	129155-51540	CIRCLIP	1							
81	2	129155-51550	PINION, CONTROL	3							
82	2	129100-51560	PINION	3							
83	2	119717-51570	RETAINER, SPRING	3							
84	2	129100-51570	SCREW	3							
85	2	158600-51570	PLUG	1							
86	2	129155-51580	O-RING	1							
87	2	129155-51591	SPRING, RACK	1							
88	2	129155-51701	COVER	1							
89	2	119717-51711	GASKET	1							
90	2	119717-51750	COVER	1							
91	2	119717-51761	GASKET	1							
92	2	158600-51790	STOOPER, RACK	1							
93	2	119717-51860	NUT, M6	2							
94	2	119125-51900	BOLT, 6 X 14	4							
95	2	22190-160002	WASHER, SEAL 16	1							
96	2	22217-120000	WASHER, SPRING 12	1							
97	2	22351-050010	PIN, SPRING 5.0X10	2							
98	2	24101-060034	BEARING, BALL 6003	1							
99	2	24101-063034	BEARING, BALL 6303	1							
100	2	24316-000150	O-RING, 4DP15.0	3							
101	2	26022-050122	SCREW, M5X12	8							

Remarks
(1)Governor(Fig.12)is incorporated in this Fuel Injection Pump (Ref.1).

N:Old ←Yes/No→ New. Q:Old ←No/Yes→ New. R:Old ←Yes/Yes→ New. S:Old ←No/No→ New. W:Add. Z:Discontinued. F:Interchangeable by set. K:Q'ty Change

++ CONTINUE ++

Copyright (C) YANMAR CO., LTD. All RightsReserved.

Fig.11. FUEL INJECTION PUMP

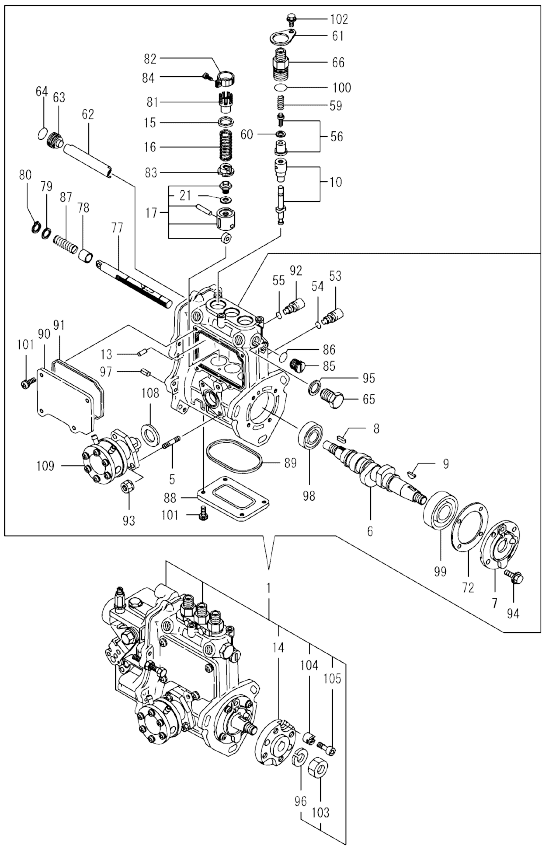

Remarks
(1)Governor(Fig.12)is incorporated in
this Fuel Injection Pump (Ref.1).

(A)=3TNV70-GGEA (D)=
(B)= (E)=
(C)= (F)=

No.	Lev.	Parts No.	Description	Q'ty (A)	(B)	(C)	(D)	(E)	(F)	I	R
102	2	26106-050102	BOLT, M5X 10 PLATED	3							
103	2	26716-120002	NUT, M12	1							
104	2	119717-51481	COLLAR, FIC FIX	1							
105	2	119717-51491	BOLT, FIXATION	1							
108	2	129155-52051	GASKET	1							
109	2	129100-52101	PUMP ASSY, FUEL FEED	1							

N:Old ◄Yes/No► New. Q:Old ◄No/Yes► New, R:Old ◄Yes/Yes► New, S:Old ◄No/No► New, W:Add, Z:Discontinued, F:Interchangeable by set, K:Q'ty Change

Copyright (C) YANMAR CO., LTD. All RightsReserved.

Fig.12. GOVERNOR

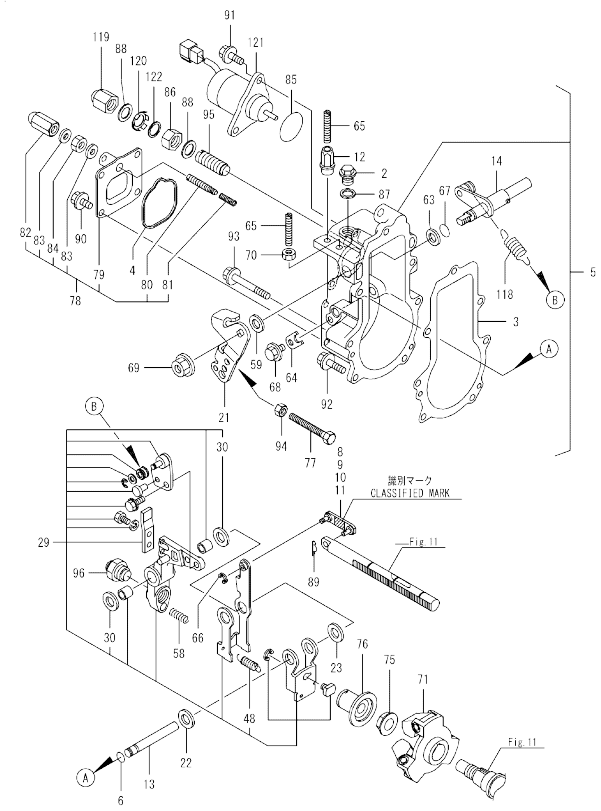

Remarks
*This figure(Governor)is incorporated
in the Fuel Injection Pump (Fig.11).
(1)Selective parts, mark; 3
(2)Selective parts, mark; 98
(3)Selective parts, mark; 88
(4)Selective parts, mark; 03

(A)=3TNV70-GGEA (D)=
(B)= (E)=
(C)= (F)=

No.	Lev.	Parts No.	Description	Q'ty (A)	(B)	(C)	(D)	(E)	(F)	I	R
2	2	119717-51930	PLUG,M10	1							
3	2	119717-61050	GASKET	1							
4	2	119717-61070	GASKET	1							
5	2	119746-61100	CASE ASSY, GOVERNOR	1							
6	3	129155-51280	O-RING, S6	1							
8	3	119717-61120	LINK, MARK :3	1							1
9	3	119717-61130	LINK, MARK 98	1							2
10	3	119717-61140	LINK, MARK 88	1							3
11	3	119717-61150	LINK, MARK 03	1							4
12	3	129209-61370	NUT, M6	1							
13	3	129052-61390	SHAFT	1							
14	3	119717-61400	SHAFT ASSY	1							
21	3	119746-61440	LEVER, CONTROL	1							
22	3	129156-61460	SHIM, T=0.6	1							
23	3	129155-61480	SPACER ASSY	1							
29	3	119746-61500	LEVER ASSY, GOVERNOR	1							
30	4	174307-51700	SHIM SET	2							
48	4	129486-61540	SPRING, SET	1							
58	3	129486-61650	SPRING, STARTING	1							
59	3	158552-61700	SHIM SET	1							
63	3	158552-61710	SHIM, T=1.0	1							
64	3	119660-61901	RETAINER, SHAFT	1							
65	3	121575-66830	SCREW	2							
66	3	22272-000030	RING, E- 3	1							
67	3	24341-000070	O-RING, 1AS7.0	1							
68	3	26106-060102	BOLT, M6X 10 PLATED	1							
69	3	26366-080002	NUT, M8	1							
70	3	26756-060002	NUT, LOCK M6	1							
71	2	119717-61201	WEIGHT ASSY,GOVERNOR	1							
75	2	129008-61301	NUT	1							
76	2	129155-61341	SLEEVE	1							
77	2	129155-61460	BOLT, IDLE	1							
78	2	119746-61600	COVER ASSY	1							
79	3	119746-61060	COVER, GOVERNOR CASE	1							
80	3	119645-61070	SCREW	1							
81	3	119746-61080	SPRING	1							
82	3	119600-66840	NUT, CAP	1							
83	3	22190-060003	SEAL WASER 6	2							
84	3	26756-060002	NUT, LOCK M6	1							
85	2	158552-61900	O-RING	1							
86	2	129209-61920	NUT, ARB	1							
87	2	22190-100002	WASHER, SEAL 10	1							
88	2	22190-120002	WASHER, SEAL 12	2							
89	2	22372-040000	PIN, SNAP 4	1							
90	2	26106-060102	BOLT, M6X 10 PLATED	4							
91	2	26106-060142	BOLT, M6X 14 PLATED	2							
92	2	26106-060202	BOLT, M6X 20 PLATED	4							
93	2	26106-060452	BOLT, M6X 45 PLATED	3							
94	2	26756-060002	NUT, LOCK M6	1							
95	2	120323-61470	BOLT, CONTROL	1							
96	2	119746-61550	ANGLEICH ASSY	1							

N:Old ←Yes/No→ New. Q:Old ←No/Yes→ New. R:Old ←Yes/Yes→ New. S:Old ←No/No→ New. W:Add. Z:Discontinued. F:Interchangeable by set. K:Q'ty Change

++ CONTINUE ++

Copyright (C) YANMAR CO., LTD. All RightsReserved.

Fig.12. GOVERNOR

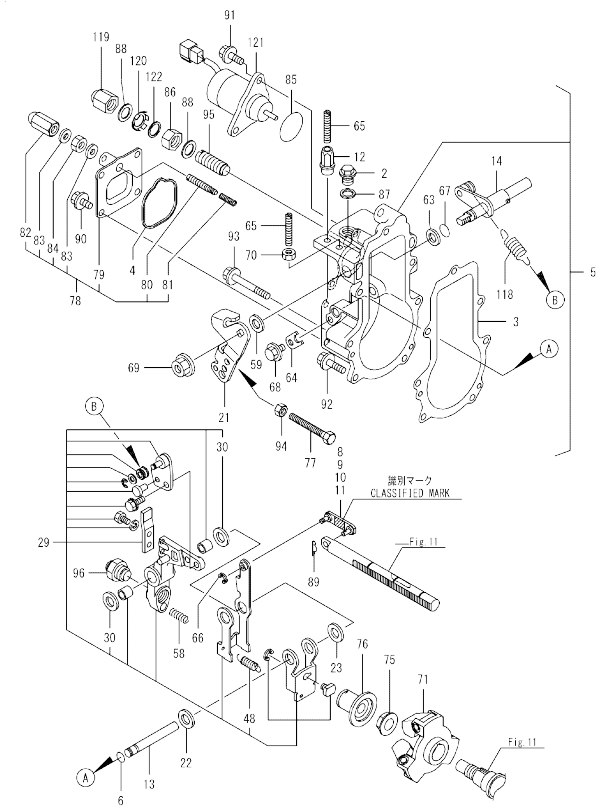

Remarks
*This figure(Governor)is incorporated
in the Fuel Injection Pump (Fig.11).
(1)Selective parts, mark; 3
(2)Selective parts, mark; 98
(3)Selective parts, mark; 88
(4)Selective parts, mark; 03

(A)=3TNV70-GGEA
(B)=
(C)=
(D)=
(E)=
(F)=

No.	Lev.	Parts No.	Description	Q'ty (A)	(B)	(C)	(D)	(E)	(F)	I	R
118	2	119746-61700	SPRING, GOVERNOR	1							
119	2	129209-61930	NUT, CAP	1							
120	2	129209-61970	PLATE	1							
121	2	119653-77950	SOLENOID, STOP	1							
122	2	23414-120016	GASKET, 12X1.0	1							

N:Old ←Yes/No→ New. Q:Old ←No/Yes→ New, R:Old ←Yes/Yes→ New, S:Old ←No/No→ New, W:Add, Z:Discontinued. F:Interchangeable by set. K:Q'ty Change

Copyright (C) YANMAR CO., LTD. All RightsReserved.

Fig.13. FUEL INJECTION VALVE

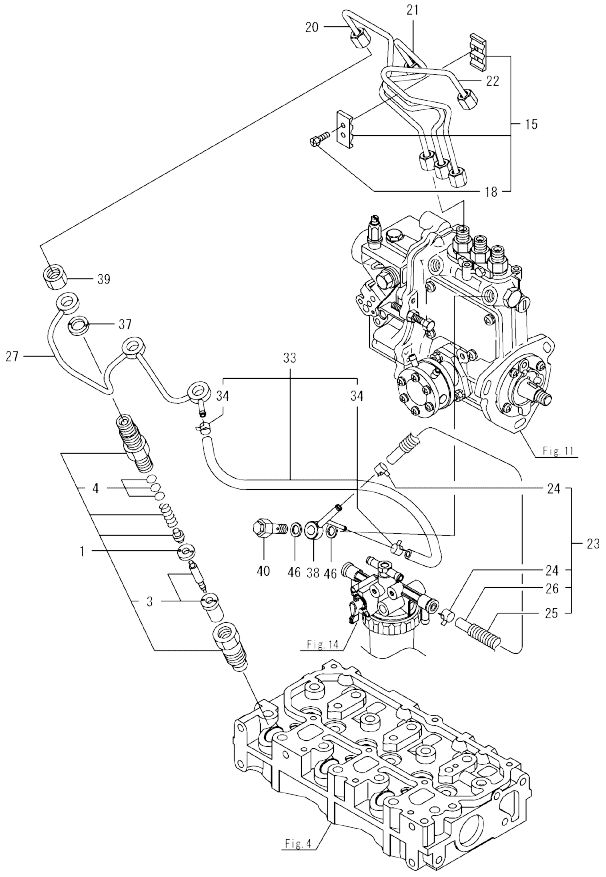

Remarks
(1)Spare parts.

(A)=3TNV70-GGEA (D)=
(B)= (E)=
(C)= (F)=

No.	Lev.	Parts No.	Description	Q'ty (A)	(B)	(C)	(D)	(E)	(F)	I	R
1	1	119515-53001	VALVE ASSY,INJECTION	3							
3	2	119515-53010	VALVE ASSY,INJECTION	3							
4	2	129901-53800	SHIM SET, ADJUSTING	3							1
15	1	129150-59120	RETAINER, PIPE	1							
18	2	129150-59131	BOLT, M4X14	2							
20	1	119546-59810	PIPE ASSY, INJECTION	1							
21	1	119546-59820	PIPE ASSY, INJECTION	1							
22	1	119546-59830	PIPE ASSY, INJECTION	1							
23	1	129950-59211	PIPE, FUEL	1							
24	2	124766-59050	CLIP, HOSE 12	2							
25	2	129950-59221	TUBE, CORRUGATED	1							
26	2	105025-59530	PIPE, FUEL D13X400	1							
27	1	119515-59540	PIPE ASSY, RETURN	1							
33	1	119744-59560	PIPE ASSY, RETURN	1							
34	2	124066-59100	CLIP, HOSE 8	2							
37	1	129901-59560	GASKET	3							
38	1	119740-59590	JOINT, OVER FLOW	1							
39	1	119620-59700	NUT, NOZZLE	3							
40	1	119813-59950	VALVE ASSY, CHECK	1							
46	1	22190-120002	WASHER, SEAL 12	2							

N:Old ←Yes/No→ New. Q:Old ←No/Yes→ New, R:Old ←Yes/Yes→ New, S:Old ←No/No→ New, W:Add, Z:Discontinued. F:Interchangeable by set. K:Q'ty Change

Copyright (C) YANMAR CO., LTD. All RightsReserved.

Fig.14. FUEL FILTER

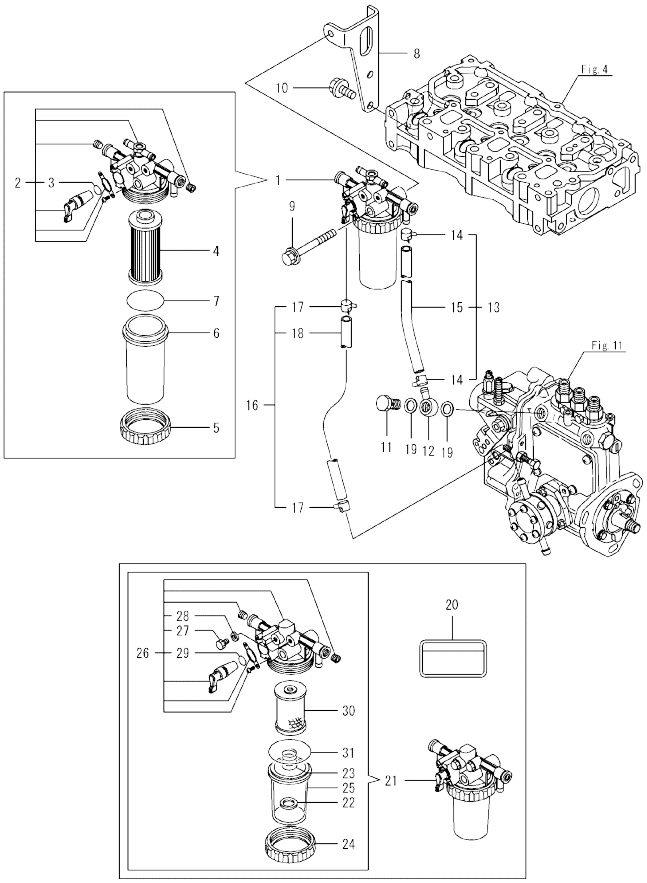

Remarks
(1)Loose parts.

(A)=3TNV70-GGEA (D)=
(B)= (E)=
(C)= (F)=

No.	Lev.	Parts No.	Description	Q'ty (A)	(B)	(C)	(D)	(E)	(F)	I	R
1	1	119833-55630	FILTER ASSY, FUEL	1							
2	2	119833-55640	BODY ASSY,FILTER	1							
3	3	24311-000110	O-RING, 1AP11.0	1							
4	2	119833-55650	ELEMENT, FUEL	1							
5	2	119833-55660	RING, RETAINING	1							
6	2	119833-55670	BOWL, STRAINER	1							
7	2	24311-000440	O-RING, 1AP44.0	1							
8	1	119717-55650	BRACKET, FILTER	1							
9	1	26014-080702	BOLT, M8X 70	1							
10	1	26106-080162	BOLT, M8X 16 PLATED	2							
11	1	103854-39140	BOLT, PIPE JOINT	1							
12	1	101304-59020	JOINT, PIPE 12	1							
13	1	129210-59080	PIPE ASSY, FUEL	1							
14	2	124766-59050	CLIP, HOSE 12	2							
15	2	129136-59110	PIPE, D13/7.5X270	1							
16	1	129210-59150	PIPE ASSY, FUEL	1							
17	2	124766-59050	CLIP, HOSE 12	2							
18	2	105025-59530	PIPE, FUEL D13X400	1							
19	1	22190-120002	WASHER, SEAL 12	2							
20	1	114110-07761	LABEL, FUEL OIL CAUT	1							1
21	1	129335-55750	SEPARATOR ASSY,WATER	1							1
22	2	129053-55640	FLOAT	1							
23	2	129053-55650	SPRING, SCREEN	1							
24	2	119833-55660	RING, RETAINING	1							
25	2	129335-55740	CUP	1							
26	2	129335-55770	BODY ASSY	1							
27	3	129242-55750	VALVE, AIR VENT	1							
28	3	129242-55760	GASKET	1							
29	3	24311-000110	O-RING, 1AP11.0	1							
30	2	129335-55780	ELEMENT ASSY	1							
31	2	24311-000440	O-RING, 1AP44.0	1							

N:Old $\xleftarrow[\text{No}]{\text{Yes}}$ New. Q:Old $\xleftarrow[\text{Yes}]{\text{No}}$ New, R:Old $\xleftarrow[\text{Yes}]{\text{Yes}}$ New. S:Old $\xleftarrow[\text{No}]{\text{No}}$ New. W:Add. Z:Discontinued. F:Interchangeable by set. K:Q'ty Change

Copyright (C) YANMAR CO., LTD. All RightsReserved.

Fig.15. STARTING MOTOR

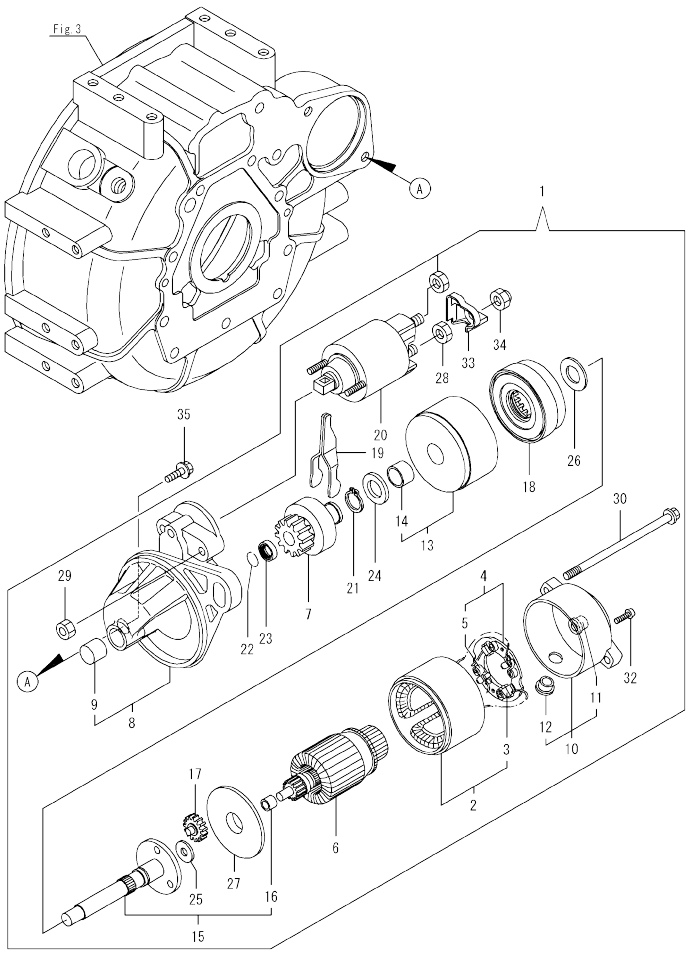

0CR10-M85800 Fig.15

(A)=3TNV70-GGEA (D)=
(B)= (E)=
(C)= (F)=

No.	Lev.	Parts No.	Description	Q'ty (A)	(B)	(C)	(D)	(E)	(F)	I	R
1	1	119515-77010	STARTER	1							
2	2	X0281007680	YOKE ASSY	1							
3	3	X0280996180	STARTER KIT	2							
4	2	X0285105190	HOLDER ASSY	1							
5	3	X0285205030	SPRING	4							
6	2	X0282005871	ARMATURE ASSY	1							
7	2	X0283006960	CLUTCH ASSY	1							
8	2	X4284001590	HOUSING ASSY	1							
9	3	X9491050100	BEARING, NEEDLE	1							
10	2	X0285007030	FRAME ASSY	1							
11	3	X9491040990	BEARING	1							
12	3	X0280626010	COVER	1							
13	2	X0284105040	BEARING ASSY	1							
14	3	X9491034330	BEARING	1							
15	2	X0286105010	SHAFT ASSY	1							
16	3	X9491034320	BEARING	1							
17	2	X0286305010	GEAR	3							
18	2	X0286355010	GEAR	1							
19	2	X0287405140	LEVER	1							
20	2	X0534007800	SWITCH ASSY	1							
21	2	X9055715000	RING	1							
22	2	X9490721360	RING	1							
23	2	X0280210331	NUT	1							
24	2	X9490138110	WASHER	1							
25	2	X9490138090	WASHER	1							
26	2	X9490138100	WASHER	1							
27	2	X0284525010	PLATE	1							
28	2	X9490562360	NUT	1							
29	2	X9490560750	NUT	2							
30	2	X9490423520	BOLT, THROUGH	2							
32	2	X9490065670	SCREW, M4X6	2							
33	2	X0280335360	COVER, TERMINAL	1							
34	2	X1289510130	NUT	1							
35	1	26106-100252	BOLT, M10X 25 PLATED	2							

N:Old ←Yes/No→ New. Q:Old ←No/Yes→ New. R:Old ←Yes/Yes→ New. S:Old ←No/No→ New. W:Add. Z:Discontinued. F:Interchangeable by set. K:Q'ty Change

Copyright (C) YANMAR CO., LTD. All RightsReserved.

Fig.16. GENERATOR

(A)=3TNV70-GGEA
(B)=
(C)=
(D)=
(E)=
(F)=

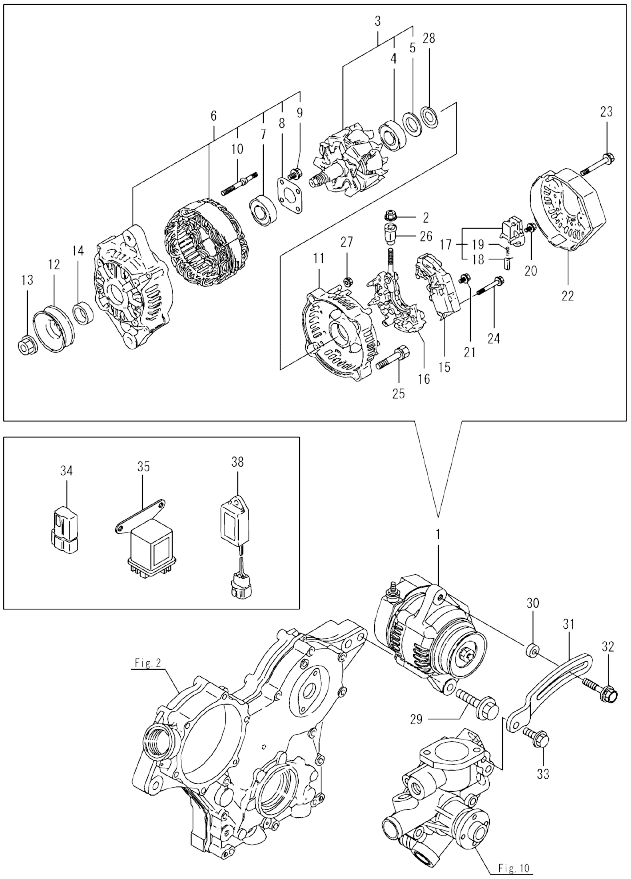

No.	Lev.	Parts No.	Description	Q'ty (A)	(B)	(C)	(D)	(E)	(F)	I	R
1	1	129423-77200	GENERATOR, 12V-40A	1							
2	2	X9490561001	NUT	1							
3	2	119620-77380	ROTOR ASSY	1							
4	3	123501-79240	BEARING, BALL	1							
5	3	119620-79250	COVER	1							
6	2	119620-77421	FRAME ASSY, DRIVE	1							
7	3	119620-79200	BEARING, BALL	1							
8	3	119620-79210	PLATE, RETAINER	1							
9	3	119620-79220	SCREW	4							
10	3	119620-79230	STUD	2							
11	2	119620-77440	FRAME ASSY	1							
12	2	119620-77461	PULLEY	1							
13	2	119620-77471	NUT	1							
14	2	119620-77490	COLLAR	1							
15	2	129423-77710	REGULATOR ASSY	1							
16	2	119620-79260	HOLDER	1							
17	2	129052-79270	HOLDER, BRUSH	1							
18	3	119620-77480	BRUSH ASSY	2							
19	3	119620-79280	SPRING	2							
20	2	119620-79290	SCREW	6							
21	2	119620-79300	SCREW	1							
22	2	129240-79300	COVER	1							
23	2	119620-79310	BOLT	3							
24	2	119620-79320	SCREW	2							
25	2	119620-79330	BOLT	2							
26	2	119620-79340	BUSH, INSULATION	1							
27	2	119620-79350	NUT	2							
28	2	119620-79360	WASHER, THRUST	2							
29	1	26106-100452	BOLT, M10X 45 PLATED	1							
30	1	119940-77270	SPACER, GENERATOR	1							
31	1	119717-77340	ADJUSTER	1							
32	1	129972-77341	BOLT, ADJUSTER L=50	1							
33	1	26106-080202	BOLT, M8X 20 PLATED	1							
34	1	119643-66900	DIODE	1							1
35	1	119650-77911	RELAY ASSY, GLOW	1							1
38	1	129211-77920	TIMER	1							1

Remarks
(1)Loose parts.

N:Old ←Yes/No→ New. Q:Old ←No/Yes→ New. R:Old ←Yes/Yes→ New. S:Old ←No/No→ New. W:Add. Z:Discontinued. F:Interchangeable by set. K:Q'ty Change

Copyright (C) YANMAR CO., LTD. All RightsReserved.

Fig.17. GASKET SET

(A)=3TNV70-GGEA
(B)=
(C)=
(D)=
(E)=
(F)=

No.	Lev.	Parts No.	Description	Q'ty (A)	(B)	(C)	(D)	(E)	(F)	I	R
1	1	719546-92600	GASKET KIT	1							1
2	2	119515-01331	GASKET, HEAD	1							
3	2	119624-32040	O-RING, P12.0	1							
4	2	119717-32050	O-RING, P17.0	3							
5	2	121850-51960	O-RING	1							
6	2	24311-000320	O-RING, 1AP32.0	2							
7	2	24341-000240	O-RING, 1AS24.0	1							
8	2	22190-160002	WASHER, SEAL 16	1							
9	2	129901-11450	PROTECTOR, NOZZLE	3							
10	2	119600-11460	GASKET, NOZZLE	6							
11	2	119717-11340	SEAL, VALVE STEM	3							
12	2	119717-11350	SEAL, VALVE STEM	3							
13	2	119515-11310	GASKET, BONNET	1							
14	2	119515-11330	GASKET	1							
15	2	119717-13110	GASKET	1							
16	2	119515-13200	GASKET, SILENCER	1							
17	2	119717-32060	O-RING, P15.0	1							
18	2	22190-080002	WASHER, SEAL 6	4							
19	2	119515-42020	GASKET, WATER PUMP	1							
20	2	23414-080000	GASKET, 8X1.0	1							
21	2	124465-44950	GASKET, 16	1							
22	2	129150-49360	GASKET	1							
23	2	129901-59560	GASKET	3							
24	2	22190-120002	WASHER, SEAL 12	4							
25	1	129400-92410	HONE	1							1
26	1	977770-1207F	GASKET.LIQUID	1							1

Remarks
(1)Optional parts.

N:Old ←Yes/No→ New. Q:Old ←No/Yes→ New. R:Old ←Yes/Yes→ New. S:Old ←No/No→ New. W:Add. Z:Discontinued. F:Interchangeable by set. K:Q'ty Change

Copyright (C) YANMAR CO., LTD. All RightsReserved.

Parts No. Index

Parts No.	Fig. No.	Ref. No.
101304-59020	14	12
103854-39140	14	11
105010-11490	4	3
105025-59530	13	26
	14	18
105027-12580	5	6
105311-01090	1	5
105425-01690	3	12
114110-07761	14	20
114250-39450	9	11
119025-51520	11	78
119125-51370	11	61
119125-51900	11	94
119131-18320	6	5
119255-44660	10	42
119265-44740	10	18
119285-01990	1	7
119285-11990	4	10
119305-35170	9	17
119336-12570	5	5
119415-51100	11	10
119515-01200	1	27
119515-01331	1	28
	17	2
119515-01720	3	9
119515-01770	3	11
119515-11101	4	12
119515-11110	4	13
119515-11200	4	20
119515-11240	4	21
119515-11280	4	25
119515-11310	4	45
	17	13
119515-11320	4	46
119515-11330	4	47
	17	14
119515-11380	4	34
119515-11740	4	4
119515-11800	4	58
119515-12501	5	2
119515-12600	5	7
119515-13200	6	7
	17	16
119515-14400	7	2
119515-14581	7	3
119515-21700	8	1
119515-22080	8	16
119515-22300	8	22
119515-22500	8	18
119515-22550	8	36

Parts No.	Fig. No.	Ref. No.
119515-22900	8	34
119515-23000	8	24
119515-23601	8	29
119515-23611	8	32
119515-34801	9	1
119515-35080	9	6
119515-42002	10	1
119515-42020	10	12
	17	19
119515-42041	10	4
119515-44600	10	31
119515-44610	10	32
119515-53001	13	1
119515-53010	13	3
119515-59540	13	27
119515-77010	15	1
119546-59810	13	20
119546-59820	13	21
119546-59830	13	22
119600-11460	4	2
	17	10
119600-66840	12	82
119620-01750	3	5
119620-02020	1	8
119620-14200	7	1
119620-21941	8	15
119620-59700	13	39
119620-77380	16	3
119620-77421	16	6
119620-77440	16	11
119620-77461	16	12
119620-77471	16	13
119620-77480	16	18
119620-77490	16	14
119620-79200	16	7
119620-79210	16	8
119620-79220	16	9
119620-79230	16	10
119620-79250	16	5
119620-79260	16	16
119620-79280	16	19
119620-79290	16	20
119620-79300	16	21
119620-79310	16	23
119620-79320	16	24
119620-79330	16	25
119620-79340	16	26
119620-79350	16	27
119620-79360	16	28
119621-21681	8	14

Parts No.	Fig. No.	Ref. No.
119623-01250	1	6
119624-32040	2	20
	17	3
119643-66900	16	34
119645-61070	12	80
119650-77911	16	35
119653-77950	12	121
119655-12560	5	4
119660-01911	2	19
119660-61901	12	64
119717-01501	2	1
119717-01570	2	3
119717-01611	3	2
119717-01750	2	18
119717-01800	2	9
119717-02411	1	11
119717-02930	1	24
119717-03031	4	35
119717-03070	4	36
		37
119717-11131	4	14
119717-11190	4	16
119717-11260	4	24
119717-11340	4	17
	17	11
119717-11350	4	18
	17	12
119717-11650	4	26
119717-13109	6	1
119717-13110	6	2
	17	15
119717-13600	6	3
119717-21200	8	5
119717-21650	8	13
119717-23200	8	28
119717-23910	8	31
119717-25050	7	10
119717-25101	7	11
119717-25911	7	17
119717-25930	7	16
119717-32050	2	21
	17	4
119717-32060	9	5
	17	17
119717-32080	2	11
119717-32100	2	10
119717-32110	2	15
119717-32120	2	16
119717-35140	9	3
119717-39210	9	12

Parts No.	Fig. No.	Ref. No.
119717-42031	10	3
119717-42350	10	16
119717-44500	10	29
119717-49800	10	22
119717-51030	11	6
119717-51060	11	7
119717-51070	11	8
119717-51150	11	14
119717-51190	11	16
119717-51200	11	17
119717-51300	11	56
119717-51330	11	59
119717-51420	11	64
119717-51481	11	104
119717-51491	11	105
119717-51500	11	77
119717-51570	11	83
119717-51711	11	89
119717-51750	11	90
119717-51761	11	91
119717-51860	11	93
119717-51930	12	2
119717-55650	14	8
119717-61050	12	3
119717-61070	12	4
119717-61120	12	8
119717-61130	12	9
119717-61140	12	10
119717-61150	12	11
119717-61201	12	71
119717-61400	12	14
119717-77340	16	31
119717-77801	4	54
119717-77820	4	55
119734-01580	2	4
119740-59590	13	38
119744-01521	2	6
119744-59560	13	33
119746-21570	8	9
119746-61060	12	79
119746-61080	12	81
119746-61100	12	5
119746-61440	12	21
119746-61500	12	29
119746-61550	12	96
119746-61600	12	78
119746-61700	12	118
119761-12020	5	1
119773-91501	9	19
119802-03100	4	38

Parts No. Index

Parts No.	Fig. No.	Ref. No.
119802-03110	4	39
119802-03121	4	40
119802-03131	4	41
119802-03141	4	42
119802-13620	6	4
119802-32130	2	17
119802-44560	10	40
119802-49010	10	43
119802-49020	10	44
119808-12540	5	3
119810-02941	1	35
119813-59950	13	40
119833-55630	14	1
119833-55640	14	2
119833-55650	14	4
119833-55660	14	5
		24
119833-55670	14	6
119865-21600	8	12
119888-01850	3	4
119940-77270	16	30
119C10-42320	10	9
120323-61470	12	95
121023-01551	2	32
121111-21501	8	8
121250-44901	10	26
121256-44600	10	41
121520-34810	9	2
121575-66830	12	65
121850-51960	2	22
	17	5
122710-51090	11	9
123501-79240	16	4
124060-01050	1	12
124066-59100	13	34
124085-02220	3	6
124160-01751	2	30
	4	33
124160-01910	1	13
124250-49351	10	25
124450-44510	10	34
124450-44530	10	36
124450-44550	10	39
124450-44560	10	37
124465-44950	10	27
	17	21
124550-51350	11	60
124766-59050	13	24
	14	14
		17

Parts No.	Fig. No.	Ref. No.
129001-32320	2	13
129001-32330	2	14
129005-59830	9	13
129008-61301	12	75
129052-61390	12	13
129052-79270	16	17
129053-55640	14	22
129053-55650	14	23
129100-01580	3	1
	8	2
129100-51560	11	82
129100-51570	11	84
129100-52101	11	109
129107-44590	10	30
129136-59110	14	15
129150-11230	4	27
129150-11750	4	29
129150-25301	7	15
129150-49360	10	28
	17	22
129150-59120	13	15
129150-59131	13	18
129155-51020	11	5
129155-51140	11	13
129155-51280	11	54
		55
	12	6
129155-51400	11	62
129155-51450	11	72
129155-51530	11	79
129155-51540	11	80
129155-51550	11	81
129155-51580	11	86
129155-51591	11	87
129155-51600	11	21
129155-51701	11	88
129155-52051	11	108
129155-61341	12	76
129155-61460	12	77
129155-61480	12	23
129156-61460	12	22
129209-61370	12	12
129209-61920	12	86
129209-61930	12	119
129209-61970	12	120
129210-59080	14	13
129210-59150	14	16
129211-77920	16	38
129240-79300	16	22
129242-55750	14	27

Parts No.	Fig. No.	Ref. No.
129242-55760	14	28
129335-55740	14	25
129335-55750	14	21
129335-55770	14	26
129335-55780	14	30
129350-49530-1	10	21
129400-92410	17	25
129423-77200	16	1
129423-77710	16	15
129457-44760	10	19
		45
129486-61540	12	48
129486-61650	12	58
129508-11180	4	15
129900-07900	4	56
129900-32130	2	12
129901-11450	4	1
	17	9
129901-53800	13	4
129901-59560	13	37
	17	23
129950-59211	13	23
129950-59221	13	25
129972-77341	16	32
158552-61700	12	59
158552-61710	12	63
158552-61900	12	85
158600-51170	11	15
158600-51270	11	53
158600-51410	11	63
158600-51420	11	65
158600-51442	11	66
158600-51570	11	85
158600-51790	11	92
171001-42290	10	17
171056-49120	10	24
171375-39601	9	18
174307-51700	12	30
22190-060003	12	83
22190-080002	9	14
		16
	17	18
22190-100002	12	87
22190-120002	12	88
	13	46
	14	19
	17	24
22190-160002	3	15
	11	95
	17	8

Parts No.	Fig. No.	Ref. No.
22217-120000	11	96
22242-000120	4	30
22252-000220	8	23
22272-000030	12	66
22351-050010	11	97
22351-060012	4	19
22372-040000	12	89
22512-040120	8	6
22857-500100	4	48
		49
22857-500160	4	50
23000-054000	5	8
23061-070230	10	38
23414-080000	10	13
	17	20
23414-120016	12	122
23857-030000	9	15
23876-005000	4	11
23876-030000	2	8
24101-060034	11	98
24101-063034	11	99
24311-000110	14	3
		29
24311-000320	2	31
	4	51
	17	6
24311-000440	14	7
		31
24316-000150	11	100
24341-000070	12	67
24341-000240	2	33
	17	7
26013-080222	5	9
26014-060122	10	33
26014-080702	14	9
26022-050122	11	101
26106-050102	11	102
26106-060102	9	10
	12	68
		90
26106-060122	2	23
	3	16
	7	9
26106-060142	5	10
	12	91
26106-060162	2	24
		34
26106-060202	4	52
	12	92
26106-060252	3	17

Parts No. Index

Parts No.	Fig. No.	Ref. No.
26106-060352	7	14
26106-060402	2	25
		26
26106-060452	3	18
	10	20
	12	93
26106-060602	2	27
26106-060652	2	28
26106-060752	4	53
26106-080122	10	14
26106-080162	4	57
	5	11
	14	10
26106-080202	10	23
	16	33
26106-080402	4	32
26106-080502	10	15
26106-100252	15	35
26106-100452	16	29
26206-100252	3	7
26206-100302	3	8
26306-080002	2	29
	6	6
26366-080002	12	69
26577-060122	10	10
26716-120002	11	103
26756-060002	12	70
		84
		94
26979-050162	4	31
27241-120000	1	14
27241-250000	10	11
719515-01560	1	1
719546-51350	11	1
719546-92600	17	1
719717-02901	1	29
719717-02911	1	32
719734-01510	2	5
977770-1207F	17	26
X0280210331	15	23
X0280335360	15	33
X0280626010	15	12
X0280996180	15	3
X0281007680	15	2
X0282005871	15	6
X0283006960	15	7
X0284105040	15	13
X0284525010	15	27
X0285007030	15	10
X0285105190	15	4

Parts No.	Fig. No.	Ref. No.
X0285205030	15	5
X0286105010	15	15
X0286305010	15	17
X0286355010	15	18
X0287405140	15	19
X0534007800	15	20
X1289510130	15	34
X4284001590	15	8
X9055715000	15	21
X9490065670	15	32
X9490138090	15	25
X9490138100	15	26
X9490138110	15	24
X9490423520	15	30
X9490560750	15	29
X9490561001	16	2
X9490562360	15	28
X9490721360	15	22
X9491034320	15	16
X9491034330	15	14
X9491040990	15	11
X9491050100	15	9

Parts No.	Fig. No.	Ref. No.

Parts No.	Fig. No.	Ref. No.