YANMAR

PARTS CATALOG

0CD50-M05550EN

Last update Feb., 2021

PREFACE

This parts catalog is the 1st edition of 3TNV70-SCF for ZONGHUA.

Published : November, 2019

Contents

0CD50-M05550

Fig. No.	Fig. Name
ENGINE	
1.	CYLINDER BLOCK
2.	GEAR HOUSING
3.	FLYWHEEL HOUSING & OIL SUMP
4.	CYLINDER HEAD & BONNET
5.	EXHAUST MANIFOLD
6.	CAMSHAFT & DRIVING GEAR
7.	CRANKSHAFT & PISTON
8.	LUB. OIL SYSTEM
9.	COOLING WATER SYSTEM
10.	FUEL INJECTION PUMP
11.	GOVERNOR
12.	FUEL INJECTION VALVE
13.	FUEL PIPE
14.	STARTER MOTOR
15.	GENERATOR
16.	ACCESSORY

Fig.1. CYLINDER BLOCK

(A)=3TNV70-SCF
(B)=
(C)=
(D)=
(E)=
(F)=

No.	Lev.	Parts No.	Description	Q'ty (A)	(B)	(C)	(D)	(E)	(F)	I	R
1	1	719515-01560	BLOCK ASSY, CYLINDER	1							
4	2	105311-01090	PLUG, 30	4							
5	2	119623-01250	PLUG, 45	1							
6	2	119285-01990	PLUG, 25	3							
7	2	119620-02020	BOLT, METAL CAP	8							
10	2	119717-02411	BUSH, CAMSHAFT	1							
11	2	124060-01050	PLUG, PT1/8	1							
12	2	124160-01910	PLUG, PT1/4	1							
13	2	27241-120000	PLUG, 12	1							
23	2	119717-02930	METAL ASSY, THRUST	2							
26	1	119515-01200	BOLT, CYLINDER HEAD	14							
27	1	119515-01331	GASKET, HEAD	1							
28	1	719717-02901	METAL ASSY, MAIN	4							1
31	1	719717-02911	METAL ASSY, MAIN .25	4							2
34	1	119810-02941	METAL ASSY, 0.25 OS	2							3

Remarks
(1)Spare parts.
(2)Under-sized(U.S.=0.25) parts.
(3)Over-sized(O.S.=0.25) parts.

N:Old ←Yes/No→ New. Q:Old ←No/Yes→ New. R:Old ←Yes/Yes→ New. S:Old ←No/No→ New. W:Add. Z:Discontinued. F:Interchangeable by set. K:Q'ty Change

Copyright (C) 2019 YANMAR GLOBAL CS CO., LTD. All RightsReserved.

Fig.2. GEAR HOUSING

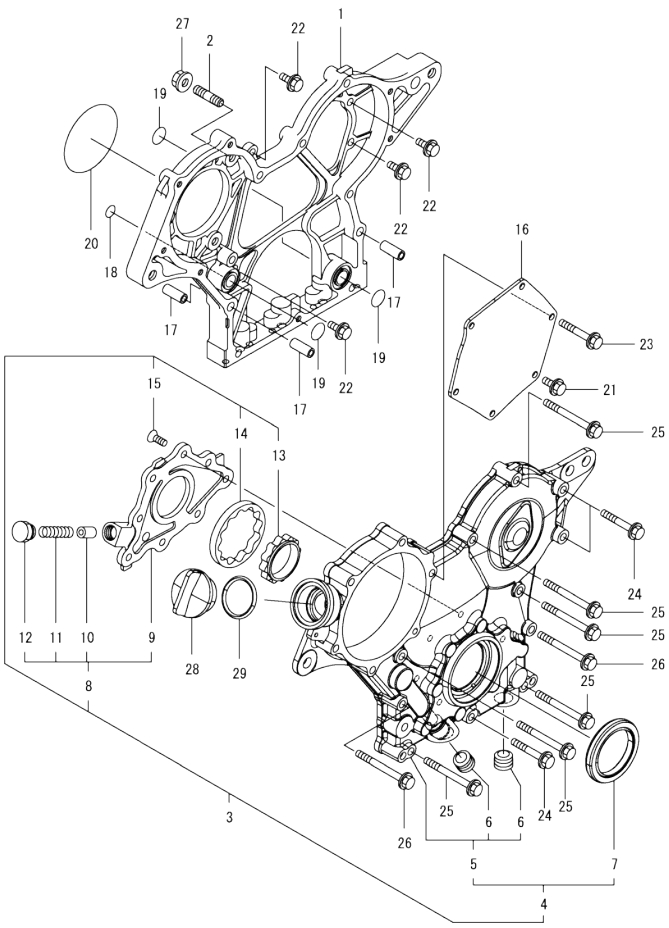

(A)=3TNV70-SCF
(B)=
(C)=
(D)=
(E)=
(F)=

No.	Lev.	Parts No.	Description	Q'ty (A)	(B)	(C)	(D)	(E)	(F)	I	R
1	1	119717-01501	CASE, GEAR	1							
2	1	119717-01570	STUD	3							
3	1	119734-01590	COVER ASSY, CASE	1							
4	2	719734-01500	COVER ASSY, CASE	1							
5	3	119717-01521	COVER, GEAR CASE	1							
6	4	23876-030000	PLUG, R03	2							
7	3	119717-01800	SEAL, OIL	1							
8	2	119717-32100	COVER ASSY, PUMP	1							
9	3	119717-32080	COVER, OIL PUMP	1							
10	3	129900-32130	VALVE, RELIEF	1							
11	3	129001-32320	SPRING	1							
12	3	129001-32330	PLUG	1							
13	2	119717-32110	ROTOR, INNER	1							
14	2	119717-32120	ROTOR, OUTER	1							
15	2	119802-32130	SCREW, M6X16	8							
16	1	119717-01750	COVER, PUMP	1							
17	1	119660-01911	PIPE, KNOCK 6X17	4							
18	1	119624-32040	O-RING, P12.0	1							
19	1	119717-32050	O-RING, P17.0	3							
20	1	121850-51960	O-RING, FUEL PUMP	1							
21	1	26106-060122	BOLT, M6X 12 PLATED	1							
22	1	26106-060162	BOLT, M6X 16 PLATED	4							
23	1	26106-060402	BOLT, M6X 40 PLATED	4							
24	1	26106-060402	BOLT, M6X 40 PLATED	3							
25	1	26106-060602	BOLT, M6X 60 PLATED	7							
26	1	26106-060652	BOLT, M6X 65 PLATED	2							
27	1	26306-080002	NUT, M8	3							
28	1	124160-01751	CAP, FILLER	1							
29	1	24311-000320	O-RING, 1AP32.0	1							

N:Old ←Yes/No→ New. Q:Old ←No/Yes→ New. R:Old ←Yes/Yes→ New. S:Old ←No/No→ New. W:Add. Z:Discontinued. F:Interchangeable by set. K:Q'ty Change

Copyright (C) 2019 YANMAR GLOBAL CS CO., LTD. All RightsReserved.

Fig.3. FLYWHEEL HOUSING & OIL SUMP

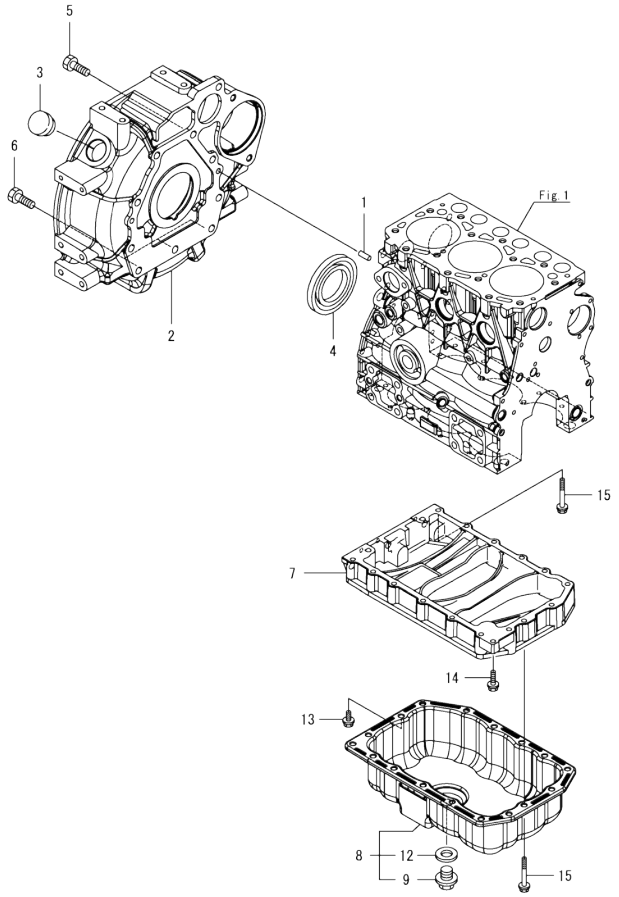

(A)=3TNV70-SCF (D)=
(B)= (E)=
(C)= (F)=

No.	Lev.	Parts No.	Description	Q'ty (A)	(B)	(C)	(D)	(E)	(F)	I	R
1	1	129100-01580	PIN, PARALLEL 8X16	2							
2	1	119515-01601	HOUSING, FLYWHEEL	1							
3	1	119620-01750	CAP, WHEEL COVER	1							
4	1	119734-02220	SEAL, OIL WHEEL SIDE	1							
5	1	26206-100252	BOLT, M10X 25 PLATED	7							
6	1	26206-100302	BOLT, M10X 30 PLATED	3							
7	1	119515-01720	SPACER, OIL PAN	1							
8	1	119540-01770	OIL PAN ASSY	1							
9	2	105425-01690	PLUG, DRAIN M16	1							
12	2	22190-160002	WASHER, SEAL 16	1							
13	1	26106-060122	BOLT, M6X 12 PLATED	1							
14	1	26106-060252	BOLT, M6X 25 PLATED	1							
15	1	26106-060452	BOLT, M6X 45 PLATED	17							

N:Old ←Yes/No→ New. Q:Old ←No/Yes→ New. R:Old ←Yes/Yes→ New. S:Old ←No/No→ New. W:Add. Z:Discontinued. F:Interchangeable by set. K:Q'ty Change

Copyright (C) 2019 YANMAR GLOBAL CS CO., LTD. All RightsReserved.

Fig.4. CYLINDER HEAD & BONNET

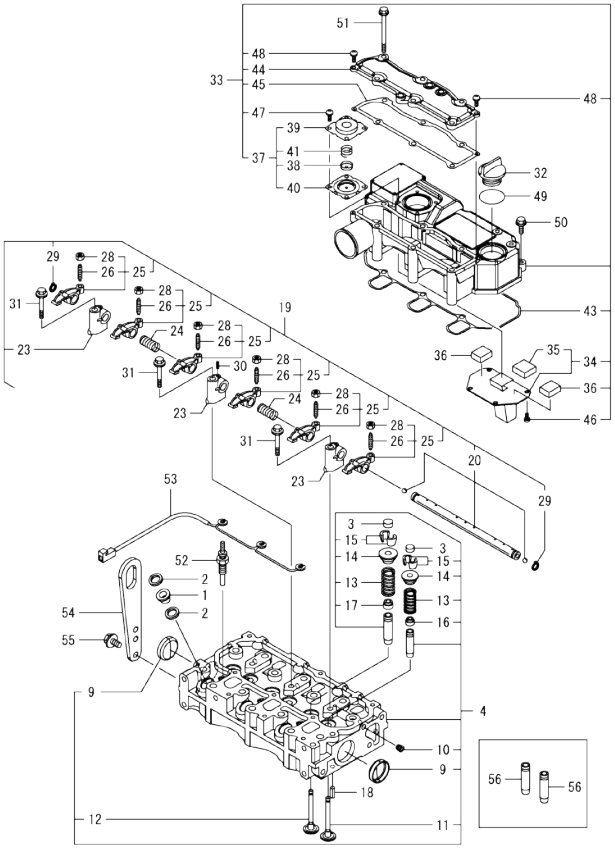

(A)=3TNV70-SCF
(B)=
(C)=
(D)=
(E)=
(F)=

No.	Lev.	Parts No.	Description	Q'ty (A)	(B)	(C)	(D)	(E)	(F)	I	R
1	1	129901-11450	PROTECTOR, NOZZLE	3							
2	1	119600-11460	GASKET, NOZZLE	6							
3	1	105010-11490	CAP, VALVE	6							
4	1	119515-11740	HEAD ASSY, CYLINDER	1							
9	2	119285-11990	PLUG, 35	2							
10	2	23876-005000	PLUG, R005	1							
11	2	119515-11101	VALVE, INTAKE	3							
12	2	119515-11110	VALVE, EXHAUST	3							
13	2	119717-11131	SPRING, VALVE	6							
14	2	129508-11180	RETAINER, SPRING	6							
15	2	119717-11190	COTTER, VALVE	12							
16	2	119717-11340	SEAL, VALVE STEM	3							
17	2	119717-11350	SEAL, VALVE STEM	3							
18	1	22351-060012	PIN, SPRING 6.0X12	2							
19	1	119515-11200	SUPPORT ASSY, ROCKER	1							
20	2	119515-11240	SHAFT ASSY, ARM	1							
23	2	119717-11260	SUPPORT, ROCKER ARM	3							
24	2	119515-11280	SPRING, SHAFT	2							
25	2	119717-11650	ARM ASSY, ROCKER INT	6							
26	3	129150-11230	SCREW, VALVE ADJUST	6							
28	3	129150-11750	NUT, M8XP1.0	6							
29	2	22242-000120	RING, 12	2							
30	2	26979-050162	SCREW, M5X16	1							
31	1	26106-080402	BOLT, M8X 40 PLATED	3							
32	1	124160-01751	CAP, FILLER	1							
33	1	119515-11380	BONNET ASSY, HEAD	1							
34	2	119717-03031	PLATE, BAFFLE	1							
35	3	119717-03070	BAFFLE, BREATHER	1							
36	2	119717-03070	BAFFLE, BREATHER	2							
37	2	119802-03100	DIAPHRAGM ASSY	1							
38	3	119802-03110	PLATE, DIAPHRAGM	1							
39	3	119802-03121	COVER, DIAPHRAGM	1							
40	3	119802-03131	DIAPHRAGM, BREATHER	1							
41	3	119802-03141	SPRING, DIAPHRAGM	1							
43	2	119515-11310	GASKET, BONNET	1							
44	2	119515-11320	COVER, BONNET	1							
45	2	119515-11330	GASKET, BONNET COVER	1							
46	2	22857-500100	SCREW, 5X10	4							
47	2	22857-500100	SCREW, 5X10	4							
48	2	22857-500160	SCREW, 5X16	2							
49	1	24311-000320	O-RING, 1AP32.0	1							
50	1	26106-060202	BOLT, M6X 20 PLATED	3							
51	1	26106-060752	BOLT, M6X 75 PLATED	6							
52	1	119717-77801	PLUG, GLOW	3							
53	1	119717-77820	CONNECTOR, GLOW PLUG	1							
54	1	129900-07900	LIFTER, ENGINE	1							
55	1	26106-080162	BOLT, M8X 16 PLATED	2							
56	1	119515-11800	GUIDE, VALVE	6							1

Remarks
(1)Spare parts.

N:Old $\frac{\text{Yes}}{\text{No}}$ New. Q:Old $\frac{\text{No}}{\text{Yes}}$ New. R:Old $\frac{\text{Yes}}{\text{Yes}}$ New. S:Old $\frac{\text{No}}{\text{No}}$ New. W:Add. Z:Discontinued. F:Interchangeable by set. K:Q'ty Change

Copyright (C) 2019 YANMAR GLOBAL CS CO., LTD. All RightsReserved.

Fig.5. EXHAUST MANIFOLD

(A)=3TNV70-SCF
(B)=
(C)=
(D)=
(E)=
(F)=

No.	Lev.	Parts No.	Description	Q'ty (A)	(B)	(C)	(D)	(E)	(F)	I	R
1	1	119718-13100	MANIFOLD, EXHAUST	1							
2	1	119717-13110	GASKET, MANIFOLD	1							
3	1	119717-13600	STUD, M8X50	2							
4	1	129E00-13610	BOLT, M8X50 10.9	4							
5	1	119131-18320	STUD, M8X22	4							
6	1	26306-080002	NUT, M8	2							

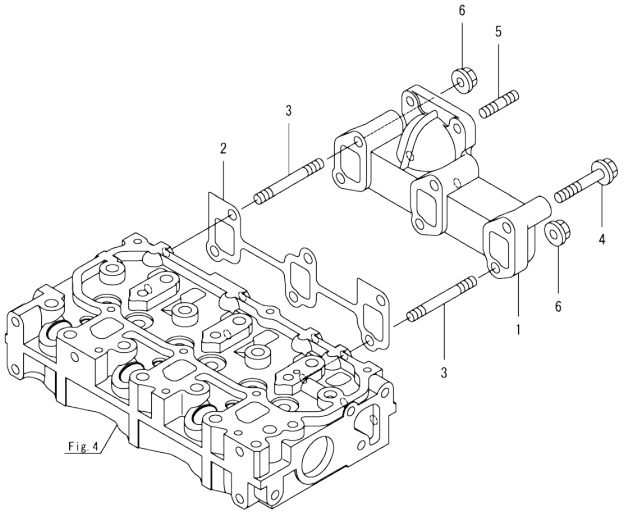

N:Old ◄Yes/No► New. Q:Old ◄No/Yes► New. R:Old ◄Yes/Yes► New. S:Old ◄No/No► New. W:Add. Z:Discontinued. F:Interchangeable by set. K:Q'ty Change

Copyright (C) 2019 YANMAR GLOBAL CS CO., LTD. All RightsReserved.

Fig.6. CAMSHAFT & DRIVING GEAR

(A)=3TNV70-SCF (D)=
(B)= (E)=
(C)= (F)=

No.	Lev.	Parts No.	Description	Q'ty (A)	(B)	(C)	(D)	(E)	(F)	I	R
1	1	119620-14200	TAPPET	6							
2	1	119515-14400	ROD, PUSH	6							
3	1	119515-14581	CAMSHAFT ASSY	1							
8	1	26106-060122	BOLT, M6X 12 PLATED	2							
9	1	119717-25050	SHAFT, IDLE GEAR	1							
10	1	119717-25101	GEAR ASSY, IDLE	1							
13	1	26106-060352	BOLT, M6X 35 PLATED	3							
14	1	129150-25301	BOLT, INJECTION PUMP	4							
15	1	119717-25930	GEAR, PUMP	1							
16	1	119717-25911	BUSH, IDLE GEAR	1							1
17	1	119717-51150	FLANGE, CAMSHAFT	1							

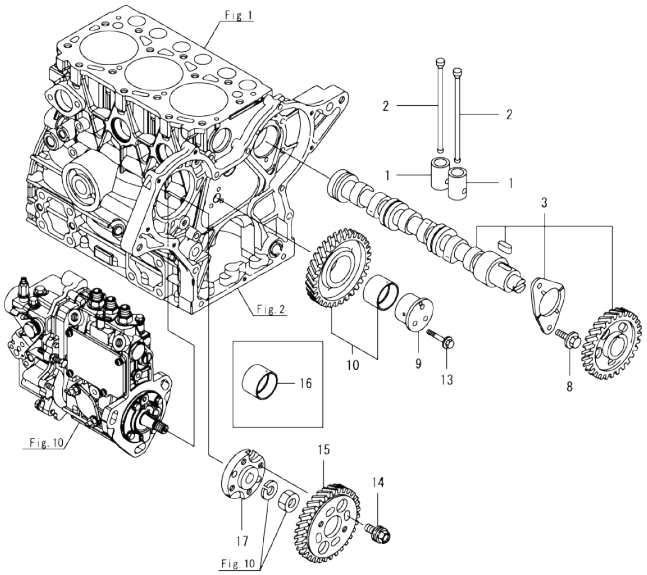

Remarks
(1)Spare parts.

N:Old ←Yes/No→ New. Q:Old ←No/Yes→ New. R:Old ←Yes/Yes→ New. S:Old ←No/No→ New. W:Add. Z:Discontinued. F:Interchangeable by set. K:Q'ty Change

Copyright (C) 2019 YANMAR GLOBAL CS CO., LTD. All RightsReserved.

Fig.7. CRANKSHAFT & PISTON

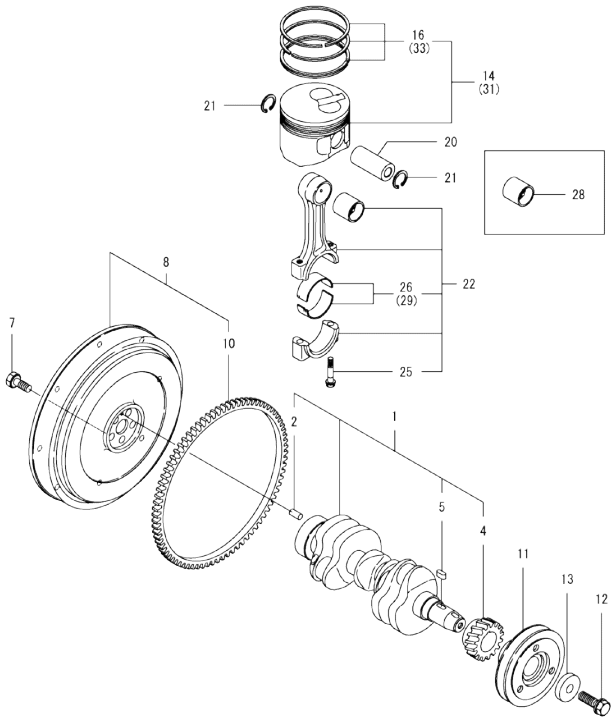

(A)=3TNV70-SCF
(B)=
(C)=
(D)=
(E)=
(F)=

No.	Lev.	Parts No.	Description	Q'ty (A)	(B)	(C)	(D)	(E)	(F)	I	R
1	1	119515-21700	CRANKSHAFT ASSY	1							
2	2	129100-01580	PIN, PARALLEL 8X16	1							
4	2	119717-21200	GEAR, CRANKSHAFT	1							
5	2	22512-040120	KEY, 4X 12	1							
7	1	119620-21500	BOLT, FLYWHEEL	5							
8	1	119515-21580	FLYWHEEL ASSY	1							
10	2	124950-21600	GEAR, RING Z=97	1							
11	1	119717-21650	V-PULLEY, CRANKSHAFT	1							
12	1	119621-21681	BOLT, FLANGE 12X1.25	1							
13	1	119620-21941	WASHER, 12	1							
14	1	119515-22080	PISTON ASSY	3							
16	2	119515-22500	RING SET, PISTON	3							
20	1	119515-22300	PIN, PISTON	3							
21	1	22252-000220	RING, 22	6							
22	1	119515-23001	ROD ASSY, CONNECTING	3							
25	2	119717-23200	BOLT, CONNECTING ROD	6							
26	2	119515-23601	METAL ASSY,CRANK PIN	3							
28	1	119717-23911	METAL, PISTON PIN	3							1
29	1	119515-23611	METAL ASSY, PIN .25	3							2
31	1	119515-22900	PISTON ASSY, 0.25 OS	3							3
33	2	119515-22550	RING SET, PISTON .25	3							3

Remarks
(1)Spare parts.
(2)Under-sized(U.S.=0.25) parts.
(3)Over-sized(O.S.=0.25) parts.

N:Old $\frac{\text{Yes}}{\text{No}}$ New. Q:Old $\frac{\text{No}}{\text{Yes}}$ New. R:Old $\frac{\text{Yes}}{\text{Yes}}$ New. S:Old $\frac{\text{No}}{\text{No}}$ New. W:Add. Z:Discontinued. F:Interchangeable by set. K:Q'ty Change

Copyright (C) 2019 YANMAR GLOBAL CS CO., LTD. All RightsReserved.

Fig.8. LUB. OIL SYSTEM

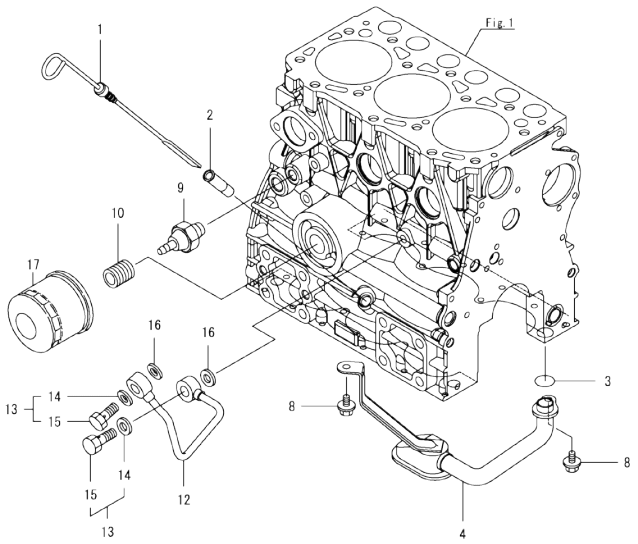

(A)=3TNV70-SCF
(B)=
(C)=
(D)=
(E)=
(F)=

No.	Lev.	Parts No.	Description	Q'ty (A)	(B)	(C)	(D)	(E)	(F)	I	R
1	1	119515-34801	DIPSTICK, OIL	1							
2	1	121520-34810	GUIDE, DIPSTICK	1							
3	1	119717-32060	O-RING, P15.0	1							
4	1	119515-35080	PIPE ASSY, OIL INLET	1							
8	1	26106-060102	BOLT, M6X 10 PLATED	2							
9	1	114250-39450	SWITCH, HYDRAULIC	1							
10	1	119717-35140	STUD	1							
12	1	119717-39210	PIPE, PUMP	1							
13	1	129005-59830	BOLT ASSY, JOINT M8	2							
14	2	22190-080002	WASHER, SEAL 8	2							
15	2	23857-030000	BOLT, JOINT 3	2							
16	1	22190-080002	WASHER, SEAL 8	2							
17	1	119305-35151	FILTER ASSY, D68XL65	1							1

Remarks
(1)Spare parts.

N:Old ←Yes/No→ New. Q:Old ←No/Yes→ New. R:Old ←Yes/Yes→ New. S:Old ←No/No→ New. W:Add. Z:Discontinued. F:Interchangeable by set. K:Q'ty Change

Copyright (C) 2019 YANMAR GLOBAL CS CO., LTD. All RightsReserved.

Fig.9. COOLING WATER SYSTEM

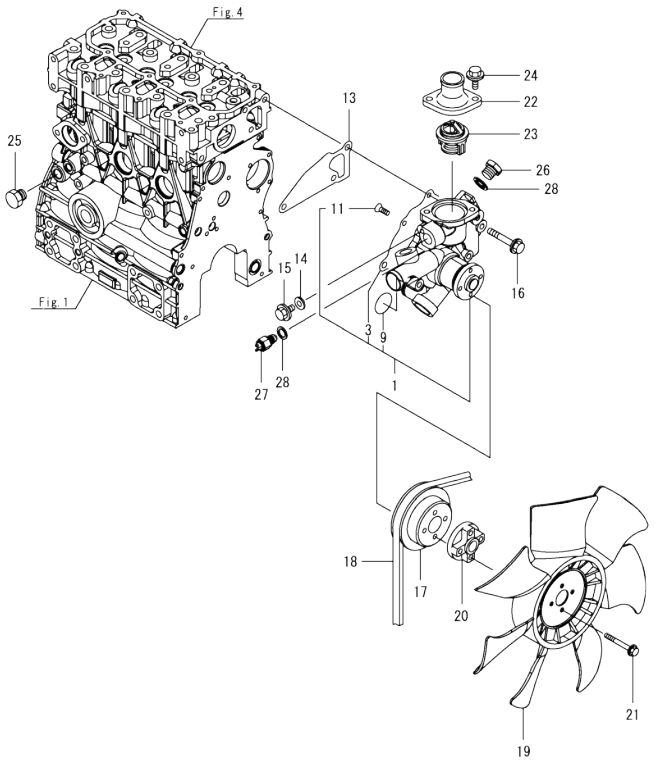

(A)=3TNV70-SCF
(B)=
(C)=
(D)=
(E)=
(F)=

No.	Lev.	Parts No.	Description	Q'ty (A)	(B)	(C)	(D)	(E)	(F)	I	R
1	1	119C10-42001	PUMP ASSY, CW	1							
3	2	119717-42031	GASKET, WATER PUMP	1							
9	2	119C10-42320	O-RING, 2028	1							
11	2	26577-060122	SCREW, M6X12	4							
13	1	119515-42020	GASKET, WATER PUMP	1							
14	1	23414-080000	GASKET, 8X1.0	1							
15	1	26106-080122	BOLT, M8X 12 PLATED	1							
16	1	26106-080502	BOLT, M8X 50 PLATED	3							
17	1	119740-42350	V-PULLEY, PUMP D=90	1							
18	1	25152-003500	V-BELT, A35	1							
19	1	119626-44741	FAN, COOLING D=320X7	1							
20	1	171353-44760	SPACER, FAN 25MM	1							
21	1	26106-060352	BOLT, M6X 35 PLATED	4							
22	1	129350-49530	COVER, THERMOSTAT	1							
23	1	119717-49800	THERMOSTAT, 71C	1							
24	1	26106-080202	BOLT, M8X 20 PLATED	2							
25	1	171056-49120	PLUG, DRAIN R1/4	1							
26	1	121450-42450	PLUG, M16	1							
27	1	121250-44901	SWITCH, TEMPERATURE	1							
28	1	124465-44950	GASKET, 16	2							

N:Old ←Yes/No→ New. Q:Old ←No/Yes→ New. R:Old ←Yes/Yes→ New. S:Old ←No/No→ New. W:Add. Z:Discontinued. F:Interchangeable by set. K:Q'ty Change

Copyright (C) 2019 YANMAR GLOBAL CS CO., LTD. All RightsReserved.

Fig.10. FUEL INJECTION PUMP

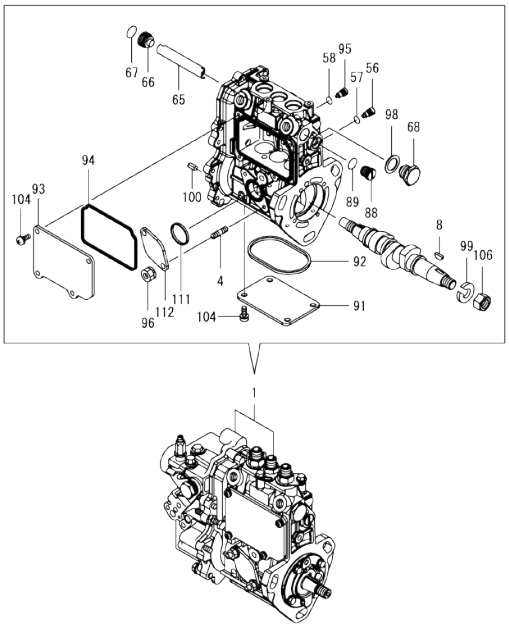

(A)=3TNV70-SCF (D)=
(B)= (E)=
(C)= (F)=

No.	Lev.	Parts No.	Description	Q'ty (A)	(B)	(C)	(D)	(E)	(F)	I	R
1	1	719541-51330	FIE ASSY	1							1
4	2	129155-51020	STUD	2							
8	2	122710-51090	KEY, FEATHER	1							
56	2	158600-51270	STOPPER, TAPPET	3							
57	2	129155-51280	O-RING, S6	3							
58	2	129155-51280	O-RING, S6	1							
65	2	129155-51400	PROTECTOR	1							
66	2	158600-51410	PLUG, DEFLIFTER M12	1							
67	2	119717-51420	O-RING	1							
68	2	158600-51420	PLUG, DEFLIFTER M16	1							
88	2	158600-51570	PLUG, RACK	1							
89	2	129155-51580	O-RING	1							
91	2	129155-51701	COVER, PUMP BOTTOM	1							
92	2	119717-51711	GASKET, PUMP	1							
93	2	119717-51750	COVER, BODY SIDE	1							
94	2	119717-51761	GASKET, PUMP COVER	1							
95	2	158600-51790	STOPPER, RACK	1							
96	2	119717-51860	NUT, M6	2							
98	2	22190-160002	WASHER, SEAL 16	1							
99	2	22217-120000	WASHER, SPRING 12	1							
100	2	22351-050010	PIN, SPRING 5.0X10	2							
104	2	26022-050122	SCREW, M5X12	8							
106	2	26716-120002	NUT, M12	1							
111	2	129155-52051	GASKET, PUMP COVER	1							
112	2	129100-52200	COVER, FEED PUMP	1							

Remarks
(1)Governor(Fig.11) is incorporated in this Fuel Injection Pump(No.1).

N:Old ◄Yes/No► New. Q:Old ◄No/Yes► New, R:Old ◄Yes/Yes► New, S:Old ◄No/No► New. W:Add. Z:Discontinued. F:Interchangeable by set. K:Q'ty Change

Copyright (C) 2019 YANMAR GLOBAL CS CO., LTD. All RightsReserved.

Fig.11. GOVERNOR

(A)=3TNV70-SCF
(B)=
(C)=
(D)=
(E)=
(F)=

No.	Lev.	Parts No.	Description	Q'ty (A)	(B)	(C)	(D)	(E)	(F)	I	R
2	2	119717-51930	PLUG, M10	1							
3	2	119717-61050	GASKET, CASE	1							
4	2	119717-61060	COVER, GOVERNOR CASE	1							
5	2	119717-61070	GASKET, COVER	1							
11	2	129155-51280	O-RING, S6	1							
26	2	129255-61410	NUT, CONTROL LEVER	1							
27	2	119534-61420	SPRING, LEVER	1							
29	2	119515-61440	LEVER, CONTROL	1							
67	2	158552-61700	SHIM SET	1							
72	2	119660-61901	STOPPER, SHAFT	1							
76	2	26106-060102	BOLT, M6X 10 PLATED	1							
80	2	129155-61461	BOLT, IDLE LIMIT	1							
81	2	158552-61900	O-RING	1							
83	2	22190-100002	WASHER, SEAL 10	1							
85	2	22372-040000	PIN, SNAP 4	1							
86	2	26106-060102	BOLT, M6X 10 PLATED	4							
87	2	26106-060142	BOLT, M6X 14 PLATED	2							
88	2	26106-060202	BOLT, M6X 20 PLATED	4							
89	2	26106-060452	BOLT, M6X 45 PLATED	3							
90	2	119740-61470	NUT, LOCK M6	1							
124	2	129630-77900	SOLENOID, STOP	1							

Remarks
* This figure(Governor) is incorporated in the Fuel Injection Pump(Fig.10).

N:Old ◄Yes/No► New. Q:Old ◄No/Yes► New, R:Old ◄Yes/Yes► New, S:Old ◄No/No► New. W:Add. Z:Discontinued. F:Interchangeable by set. K:Q'ty Change

Copyright (C) 2019 YANMAR GLOBAL CS CO., LTD. All RightsReserved.

Fig.12. FUEL INJECTION VALVE

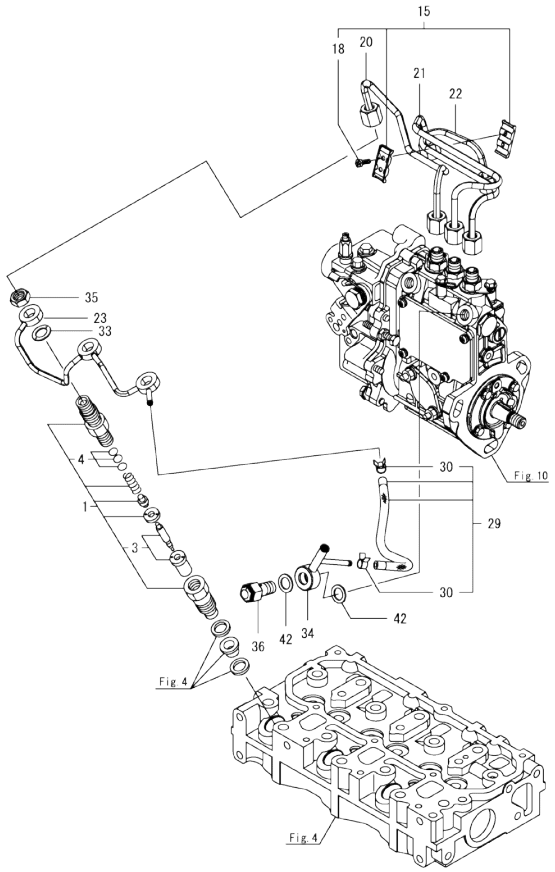

(A)=3TNV70-SCF
(B)=
(C)=
(D)=
(E)=
(F)=

No.	Lev.	Parts No.	Description	Q'ty (A)	(B)	(C)	(D)	(E)	(F)	I	R
1	1	119517-53001	VALVE ASSY,INJECTION	3							
3	2	119517-53010	VALVE ASSY,INJECTION	3							
4	2	129901-53800	SHIM SET, ADJUSTING	3							1
15	1	129150-59120	RETAINER, PIPE	1							
18	2	129150-59131	BOLT, M4X14	2							
20	1	119546-59810	PIPE, INJECTION NO.1	1							
21	1	119546-59820	PIPE, INJECTION NO.2	1							
22	1	119546-59830	PIPE, INJECTION NO.3	1							
23	1	119515-59540	PIPE ASSY, RETURN	1							
29	1	119744-59560	HOSE ASSY, RETURN	1							
30	2	124066-59100	CLAMP, HOSE 8	2							
33	1	129901-59560	GASKET, FUEL RETURN	3							
34	1	119740-59590	JOINT, OVERFLOW	1							
35	1	119620-59700	NUT, NOZZLE RETURN	3							
36	1	119813-59950	VALVE ASSY, CHECK	1							
42	1	22190-120002	WASHER, SEAL 12	2							

Remarks
(1)Spare parts.

N:Old $\frac{\text{Yes}}{\text{No}}$ New. Q:Old $\frac{\text{No}}{\text{Yes}}$ New. R:Old $\frac{\text{Yes}}{\text{Yes}}$ New. S:Old $\frac{\text{No}}{\text{No}}$ New. W:Add. Z:Discontinued. F:Interchangeable by set. K:Q'ty Change

Copyright (C) 2019 YANMAR GLOBAL CS CO., LTD. All RightsReserved.

Fig.13. FUEL PIPE

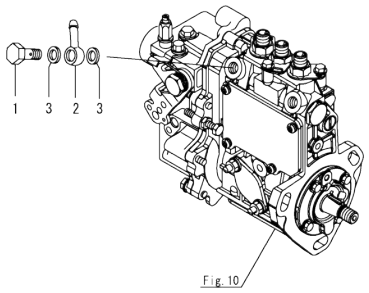

(A)=3TNV70-SCF
(B)=
(C)=
(D)=
(E)=
(F)=

No.	Lev.	Parts No.	Description	Q'ty (A)	(B)	(C)	(D)	(E)	(F)	I	R
1	1	103854-39140	BOLT, PIPE JOINT	1							
2	1	101304-59020	JOINT, PIPE 12	1							
3	1	22190-120002	WASHER, SEAL 12	2							

N:Old ◄Yes/No► New. Q:Old ◄No/Yes► New, R:Old ◄Yes/Yes► New. S:Old ◄No/No► New. W:Add. Z:Discontinued. F:Interchangeable by set. K:Q'ty Change

Copyright (C) 2019 YANMAR GLOBAL CS CO., LTD. All RightsReserved.

Fig.14. STARTER MOTOR

(A)=3TNV70-SCF
(B)=
(C)=
(D)=
(E)=
(F)=

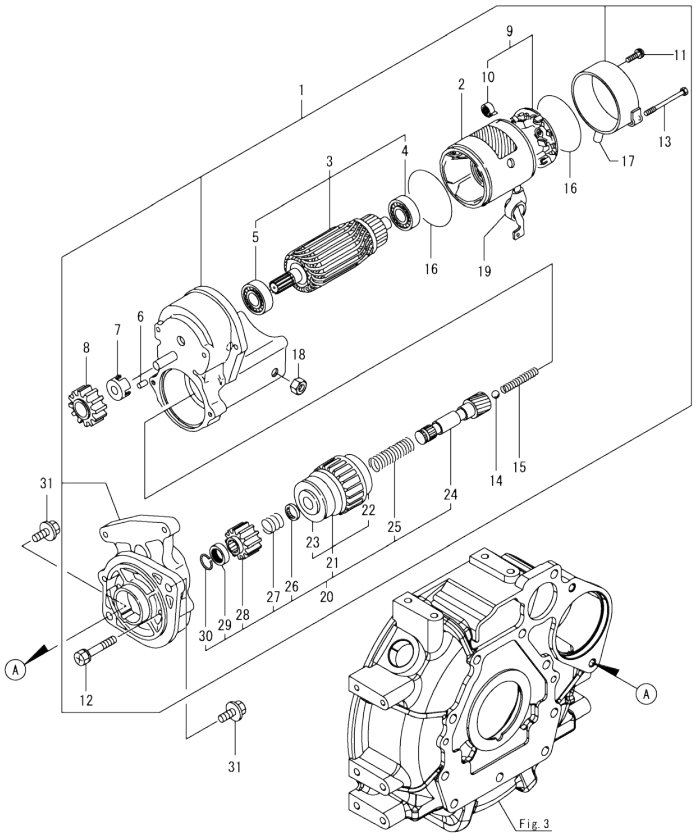

No.	Lev.	Parts No.	Description	Q'ty (A)	(B)	(C)	(D)	(E)	(F)	I	R
1	1	119540-77010	STARTER, RA1.4	1							
2	2	129407-77210	YOKE ASSY	1							
3	2	129407-77220	ARMATURE ASSY	1							
4	3	129129-77230	BEARING, BALL	1							
5	3	129129-77240	BEARING, BALL	1							
6	2	X0283060061	ROLLER	5							
7	2	129129-77260	RETAINER	1							
8	2	129129-77270	PINION	1							
9	2	129407-77300	HOLDER ASSY	1							
10	3	X9491730461	SPRING, BRUSH	4							
11	2	129129-77460	SCREW	2							
12	2	129129-77320	BOLT, W/WASHER	2							
13	2	129407-77330	BOLT	2							
14	2	X9491200240	BALL, STEEL	1							
15	2	129129-77340	SPRING	1							
16	2	129129-77350	O-RING	2							
17	2	129129-77362	COVER	1							
18	2	X9490561370	NUT	1							
19	2	129129-77380	CAP	1							
20	2	X1280996600	STARTER KIT	1							
21	3	129129-77390	CLUTCH ASSY, STARTER	1							
22	4	129129-77440	BEARING, BALL	1							
23	4	129129-77450	BEARING, BALL	1							
24	3	129129-77400	SHAFT, STARTER	1							
25	3	129129-77410	SPRING, COIL	1							
26	3	X0283270140	RETAINER, SNAP	1							
27	3	129407-77410	SPRING, COIL	1							
28	3	X0283712350	PINION, STARTER	1							
29	3	X0280210230	NUT, PINION STOP	1							
30	3	129129-77430	RING, SNAP	1							
31	1	26106-100252	BOLT, M10X 25 PLATED	2							

N:Old ←Yes/No→ New. Q:Old ←No/Yes→ New. R:Old ←Yes/Yes→ New. S:Old ←No/No→ New. W:Add. Z:Discontinued. F:Interchangeable by set. K:Q'ty Change

Copyright (C) 2019 YANMAR GLOBAL CS CO., LTD. All RightsReserved.

Fig.15. GENERATOR

(A)=3TNV70-SCF
(B)=
(C)=
(D)=
(E)=
(F)=

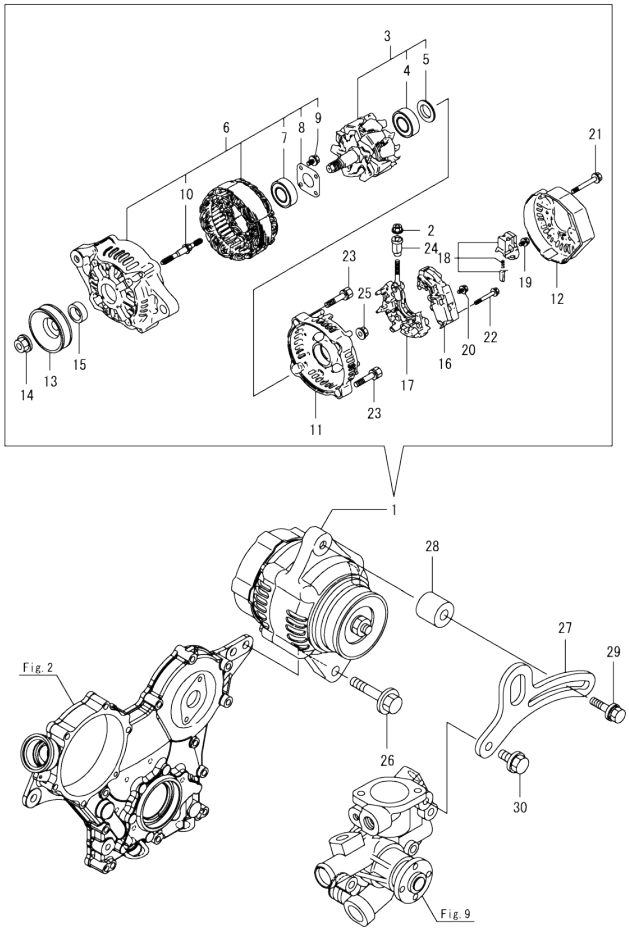

No.	Lev.	Parts No.	Description	Q'ty (A)	(B)	(C)	(D)	(E)	(F)	I	R
1	1	119626-77220	ALTERNATOR, 12V-55A	1							
2	2	129240-79310	NUT	1							
3	2	129052-77380	ROTOR ASSY	1							
4	3	123501-79240	BEARING, BALL	1							
5	3	119620-79250	COVER, BEARING	1							
6	2	129052-77422	FRAME ASSY	1							
7	3	119620-79200	BEARING, BALL	1							
8	3	119620-79210	PLATE, RETAINER	1							
9	3	119620-79220	SCREW	4							
10	3	119620-79230	STUD	2							
11	2	128401-77440	COVER, END	1							
12	2	119626-77450	COVER, END	1							
13	2	119620-77461	PULLEY, GENERATOR	1							
14	2	119620-77471	NUT	1							
15	2	119620-77490	COLLAR	1							
16	2	129423-77730	REGULATOR ASSY	1							
17	2	129052-79260	HOLDER ASSY	1							
18	2	129052-79270	HOLDER ASSY, BRUSH	1							
19	2	119620-79290	SCREW	6							
20	2	119620-79300	SCREW	1							
21	2	119620-79310	BOLT	3							
22	2	119620-79320	SCREW, W/WASHER	2							
23	2	119620-79330	BOLT	2							
24	2	119620-79340	BUSH, INSULATION	1							
25	2	119620-79350	NUT	2							
26	1	26106-100502	BOLT, M10X 50 PLATED	1							
27	1	119230-77330	ADJUSTER, BELT	1							
28	1	124732-77340	SPACER, ADJUSTER	1							
29	1	129972-77341	BOLT, ADJUSTER L=50	1							
30	1	26106-080202	BOLT, M8X 20 PLATED	1							

N:Old ←Yes/No→ New. Q:Old ←No/Yes→ New. R:Old ←Yes/Yes→ New. S:Old ←No/No→ New. W:Add. Z:Discontinued. F:Interchangeable by set. K:Q'ty Change

Copyright (C) 2019 YANMAR GLOBAL CS CO., LTD. All RightsReserved.

Fig.16. ACCESSORY

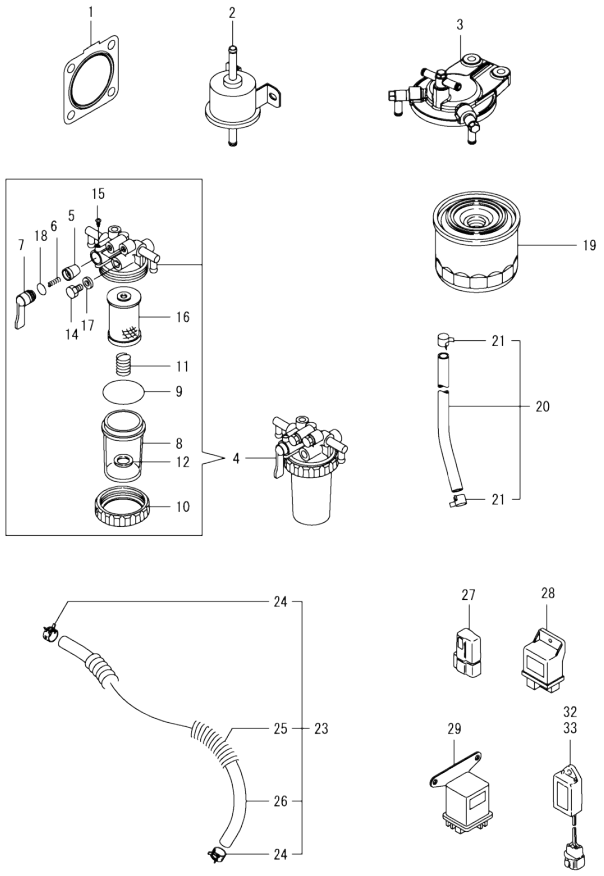

(A)=3TNV70-SCF (D)=
(B)= (E)=
(C)= (F)=

No.	Lev.	Parts No.	Description	Q'ty (A)	(B)	(C)	(D)	(E)	(F)	I	R
1	1	119515-13200	GASKET, SILENCER	1							
2	1	129612-52100	PUMP, FUEL FEED	1							
3	1	119934-55611	BRACKET, FILTER	1							
4	1	129335-55701	SEPARATOR ASSY,WATER	1							
5	2	104200-55321	VALVE, TAPER	1							
6	2	104200-55330	SPRING, FUEL VALVE	1							
7	2	104200-55341	HANDLE, COCK	1							
8	2	124064-55510	CUP, FUEL STARINER	1							
9	2	102103-55520	O-RING, FILTER	1							
10	2	110250-55610	RING, CUP RETAINING	1							
11	2	121257-55720	SPRING, ELEMENT	1							
12	2	121257-55731	FLOAT	1							
14	2	101720-55750	PLUG, HEXAGON M6	2							
15	2	104200-55750	SCREW, M4	1							
16	2	171081-55910	FILTER, FUEL 100M	1							
17	2	23418-060000	GASKET, 6X1.0	2							
18	2	24311-240100	O-RING, 1AP10A	1							
19	1	129004-55801	FILTER, FUEL	1							
20	1	129210-59080	HOSE ASSY, FUEL L270	1							
21	2	124766-59050	CLAMP, HOSE 11.5	2							
23	1	129950-59211	HOSE ASSY, FUEL	1							
24	2	124766-59050	CLAMP, HOSE 11.5	2							
25	2	129950-59221	TUBE, CORRUGATED 15	1							
26	2	105025-59530	HOSE, FUEL D13X400	1							
27	1	119643-66900	DIODE	1							
28	1	119802-77200	RELAY, SAFETY	1							
29	1	119650-77911	RELAY ASSY, GLOW	1							
32	1	129155-77925	TIMER, SECTION 4	1							
33	1	129211-77920	TIMER, SECTION 1	1							

N:Old ←Yes/No→ New. Q:Old ←No/Yes→ New, R:Old ←Yes/Yes→ New, S:Old ←No/No→ New. W:Add. Z:Discontinued. F:Interchangeable by set. K:Q'ty Change

Copyright (C) 2019 YANMAR GLOBAL CS CO., LTD. All RightsReserved.

Parts No. Index

Parts No.	Fig. No.	Ref. No.
101304-59020	13	2
101720-55750	16	14
102103-55520	16	9
103854-39140	13	1
104200-55321	16	5
104200-55330	16	6
104200-55341	16	7
104200-55750	16	15
105010-11490	4	3
105025-59530	16	26
105311-01090	1	4
105425-01690	3	9
110250-55610	16	10
114250-39450	8	9
119131-18320	5	5
119230-77330	15	27
119285-01990	1	6
119285-11990	4	9
119305-35151	8	17
119515-01200	1	26
119515-01331	1	27
119515-01601	3	2
119515-01720	3	7
119515-11101	4	11
119515-11110	4	12
119515-11200	4	19
119515-11240	4	20
119515-11280	4	24
119515-11310	4	43
119515-11320	4	44
119515-11330	4	45
119515-11380	4	33
119515-11740	4	4
119515-11800	4	56
119515-13200	16	1
119515-14400	6	2
119515-14581	6	3
119515-21580	7	8
119515-21700	7	1
119515-22080	7	14
119515-22300	7	20
119515-22500	7	16
119515-22550	7	33
119515-22900	7	31
119515-23001	7	22
119515-23601	7	26
119515-23611	7	29
119515-34801	8	1
119515-35080	8	4
119515-42020	9	13

Parts No.	Fig. No.	Ref. No.
119515-59540	12	23
119515-61440	11	29
119517-53001	12	1
119517-53010	12	3
119534-61420	11	27
119540-01770	3	8
119540-77010	14	1
119546-59810	12	20
119546-59820	12	21
119546-59830	12	22
119600-11460	4	2
119620-01750	3	3
119620-02020	1	7
119620-14200	6	1
119620-21500	7	7
119620-21941	7	13
119620-59700	12	35
119620-77461	15	13
119620-77471	15	14
119620-77490	15	15
119620-79200	15	7
119620-79210	15	8
119620-79220	15	9
119620-79230	15	10
119620-79250	15	5
119620-79290	15	19
119620-79300	15	20
119620-79310	15	21
119620-79320	15	22
119620-79330	15	23
119620-79340	15	24
119620-79350	15	25
119621-21681	7	12
119623-01250	1	5
119624-32040	2	18
119626-44741	9	19
119626-77220	15	1
119626-77450	15	12
119643-66900	16	27
119650-77911	16	29
119660-01911	2	17
119660-61901	11	72
119717-01501	2	1
119717-01521	2	5
119717-01570	2	2
119717-01750	2	16
119717-01800	2	7
119717-02411	1	10
119717-02930	1	23
119717-03031	4	34

Parts No.	Fig. No.	Ref. No.
119717-03070	4	35
		36
119717-11131	4	13
119717-11190	4	15
119717-11260	4	23
119717-11340	4	16
119717-11350	4	17
119717-11650	4	25
119717-13110	5	2
119717-13600	5	3
119717-21200	7	4
119717-21650	7	11
119717-23200	7	25
119717-23911	7	28
119717-25050	6	9
119717-25101	6	10
119717-25911	6	16
119717-25930	6	15
119717-32050	2	19
119717-32060	8	3
119717-32080	2	9
119717-32100	2	8
119717-32110	2	13
119717-32120	2	14
119717-35140	8	10
119717-39210	8	12
119717-42031	9	3
119717-49800	9	23
119717-51150	6	17
119717-51420	10	67
119717-51711	10	92
119717-51750	10	93
119717-51761	10	94
119717-51860	10	96
119717-51930	11	2
119717-61050	11	3
119717-61060	11	4
119717-61070	11	5
119717-77801	4	52
119717-77820	4	53
119718-13100	5	1
119734-01590	2	3
119734-02220	3	4
119740-42350	9	17
119740-59590	12	34
119740-61470	11	90
119744-59560	12	29
119802-03100	4	37
119802-03110	4	38
119802-03121	4	39

Parts No.	Fig. No.	Ref. No.
119802-03131	4	40
119802-03141	4	41
119802-32130	2	15
119802-77200	16	28
119810-02941	1	34
119813-59950	12	36
119934-55611	16	3
119C10-42001	9	1
119C10-42320	9	9
121250-44901	9	27
121257-55720	16	11
121257-55731	16	12
121450-42450	9	26
121520-34810	8	2
121850-51960	2	20
122710-51090	10	8
123501-79240	15	4
124060-01050	1	11
124064-55510	16	8
124066-59100	12	30
124160-01751	2	28
	4	32
124160-01910	1	12
124465-44950	9	28
124732-77340	15	28
124766-59050	16	21
		24
124950-21600	7	10
128401-77440	15	11
129001-32320	2	11
129001-32330	2	12
129004-55801	16	19
129005-59830	8	13
129052-77380	15	3
129052-77422	15	6
129052-79260	15	17
129052-79270	15	18
129100-01580	3	1
	7	2
129100-52200	10	112
129129-77230	14	4
129129-77240	14	5
129129-77260	14	7
129129-77270	14	8
129129-77320	14	12
129129-77340	14	15
129129-77350	14	16
129129-77362	14	17
129129-77380	14	19
129129-77390	14	21

Parts No. Index

Parts No.	Fig. No.	Ref. No.
129129-77400	14	24
129129-77410	14	25
129129-77430	14	30
129129-77440	14	22
129129-77450	14	23
129129-77460	14	11
129150-11230	4	26
129150-11750	4	28
129150-25301	6	14
129150-59120	12	15
129150-59131	12	18
129155-51020	10	4
129155-51280	10	57
		58
	11	11
129155-51400	10	65
129155-51580	10	89
129155-51701	10	91
129155-52051	10	111
129155-61461	11	80
129155-77925	16	32
129210-59080	16	20
129211-77920	16	33
129240-79310	15	2
129255-61410	11	26
129335-55701	16	4
129350-49530	9	22
129407-77210	14	2
129407-77220	14	3
129407-77300	14	9
129407-77330	14	13
129407-77410	14	27
129423-77730	15	16
129508-11180	4	14
129612-52100	16	2
129630-77900	11	124
129900-07900	4	54
129900-32130	2	10
129901-11450	4	1
129901-53800	12	4
129901-59560	12	33
129950-59211	16	23
129950-59221	16	25
129972-77341	15	29
129E00-13610	5	4
158552-61700	11	67
158552-61900	11	81
158600-51270	10	56
158600-51410	10	66
158600-51420	10	68

Parts No.	Fig. No.	Ref. No.
158600-51570	10	88
158600-51790	10	95
171056-49120	9	25
171081-55910	16	16
171353-44760	9	20
22190-080002	8	14
		16
22190-100002	11	83
22190-120002	12	42
	13	3
22190-160002	3	12
	10	98
22217-120000	10	99
22242-000120	4	29
22252-000220	7	21
22351-050010	10	100
22351-060012	4	18
22372-040000	11	85
22512-040120	7	5
22857-500100	4	46
		47
22857-500160	4	48
23414-080000	9	14
23418-060000	16	17
23857-030000	8	15
23876-005000	4	10
23876-030000	2	6
24311-000320	2	29
	4	49
24311-240100	16	18
25152-003500	9	18
26022-050122	10	104
26106-060102	8	8
	11	76
		86
26106-060122	2	21
	3	13
	6	8
26106-060142	11	87
26106-060162	2	22
26106-060202	4	50
	11	88
26106-060252	3	14
26106-060352	6	13
	9	21
26106-060402	2	23
		24
26106-060452	3	15
	11	89
26106-060602	2	25

Parts No.	Fig. No.	Ref. No.
26106-060652	2	26
26106-060752	4	51
26106-080122	9	15
26106-080162	4	55
26106-080202	9	24
	15	30
26106-080402	4	31
26106-080502	9	16
26106-100252	14	31
26106-100502	15	26
26206-100252	3	5
26206-100302	3	6
26306-080002	2	27
	5	6
26577-060122	9	11
26716-120002	10	106
26979-050162	4	30
27241-120000	1	13
719515-01560	1	1
719541-51330	10	1
719717-02901	1	28
719717-02911	1	31
719734-01500	2	4
X0280210230	14	29
X0283060061	14	6
X0283270140	14	26
X0283712350	14	28
X1280996600	14	20
X9490561370	14	18
X9491200240	14	14
X9491730461	14	10

Parts No.	Fig. No.	Ref. No.