YANMAR

# PARTS CATALOG

0CW10-M85500EN

Last update Dec., 2020

# PREFACE

1. This parts catalog is the 1st edition of 3TNV70-XPLW for JIN PRECISION CO., LTD.

Published : July, 2013

2. Model name

| Engine model | Vehicle | Vehicle made by |
|---|---|---|
| 3TNV70-XPLW | REFRIGERATOR | JIN PRECISION CO., LTD. |

# Contents

0CW10-M85500


| Fig. No. | Fig. Name |
|---|---|
| 3TNV70-XPLW | |
| 1. | CYLINDER BLOCK |
| 2. | GEAR HOUSING |
| 3. | MOUNTING FLANGE & OIL SUMP |
| 4. | CYLINDER HEAD & BONNET |
| 5. | AIR CLEANER |
| 6. | EXHAUST MANIFOLD |
| 7. | CAMSHAFT & DRIVING GEAR |
| 8. | CRANKSHAFT & PISTON |
| 9. | LUB.OIL SYSTEM |
| 10. | COOLING WATER SYSTEM |
| 11. | FUEL INJECTION PUMP |
| 12. | GOVERNOR |
| 13. | FUEL INJECTION VALVE |
| 14. | FUEL FILTER |
| 15. | STARTING MOTOR |
| 16. | GENERATOR |
| 17. | ELECTRIC PARTS |
| 18. | GASKET SET |

| Fig. No. | Fig. Name |
|---|---|

# Fig.1. CYLINDER BLOCK

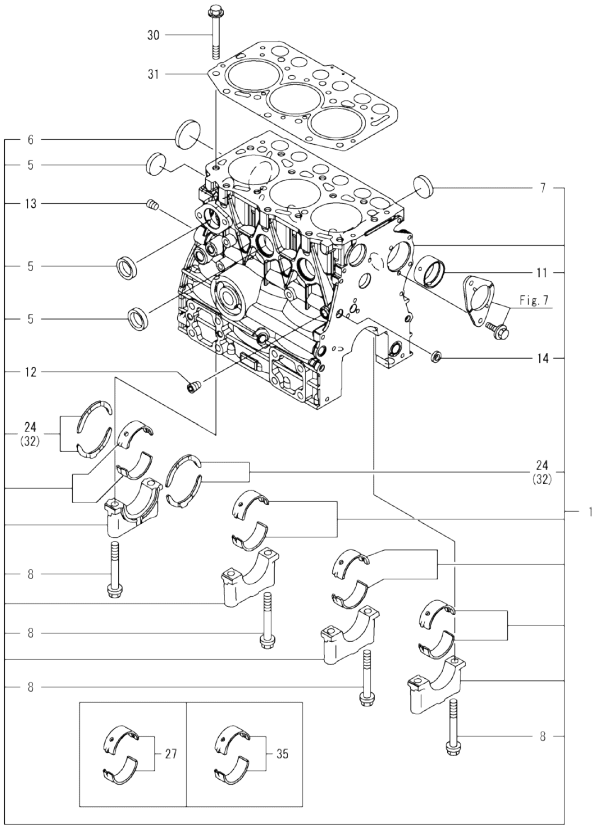


Remarks
(1)Spare part.
(2)Over-sized(O.S.=0.25)part.
(3)Under-sized(U.S.=0.25)part.



(A)=3TNV70-XPLW (D)=
(B)= (E)=
(C)= (F)=

| No. | Lev. | Parts No. | Description | Q'ty (A) | (B) | (C) | (D) | (E) | (F) | I | R |
|---|---|---|---|---|---|---|---|---|---|---|---|
| 1 | 1 | 719515-01561 | CYLINDER BLOCK ASSY | 1 | | | | | | | |
| 5 | 2 | 105311-01090 | PLUG | 4 | | | | | | | |
| 6 | 2 | 119623-01250 | PLUG | 1 | | | | | | | |
| 7 | 2 | 119285-01990 | PLUG | 3 | | | | | | | |
| 8 | 2 | 119620-02020 | BOLT | 8 | | | | | | | |
| 11 | 2 | 119717-02411 | BUSH | 1 | | | | | | | |
| 12 | 2 | 124060-01050 | PLUG | 1 | | | | | | | |
| 13 | 2 | 124160-01910 | PLUG | 1 | | | | | | | |
| 14 | 2 | 27241-120000 | PLUG | 1 | | | | | | | |
| 24 | 2 | 119717-02930 | METAL, THRUST | 2 | | | | | | | |
| 27 | 1 | 719717-02901 | METAL, MAIN | 4 | | | | | | | 1 |
| 30 | 1 | 119515-01200 | BOLT | 14 | | | | | | | |
| 31 | 1 | 119515-01331 | GASKET, HEAD | 1 | | | | | | | |
| 32 | 1 | 119810-02941 | METAL, THRUST 0.25 | 2 | | | | | | | 2 |
| 35 | 1 | 719717-02911 | METAL, MAIN 0.25 | 4 | | | | | | | 3 |

N:Old ←Yes/No→ New. Q:Old ←No/Yes→ New. R:Old ←Yes/Yes→ New. S:Old ←No/No→ New. W:Add. Z:Discontinued. F:Interchangeable by set. K:Q'ty Change

Copyright (C) 2013 YANMAR GLOBAL CS CO., LTD. All RightsReserved.

# Fig.2. GEAR HOUSING

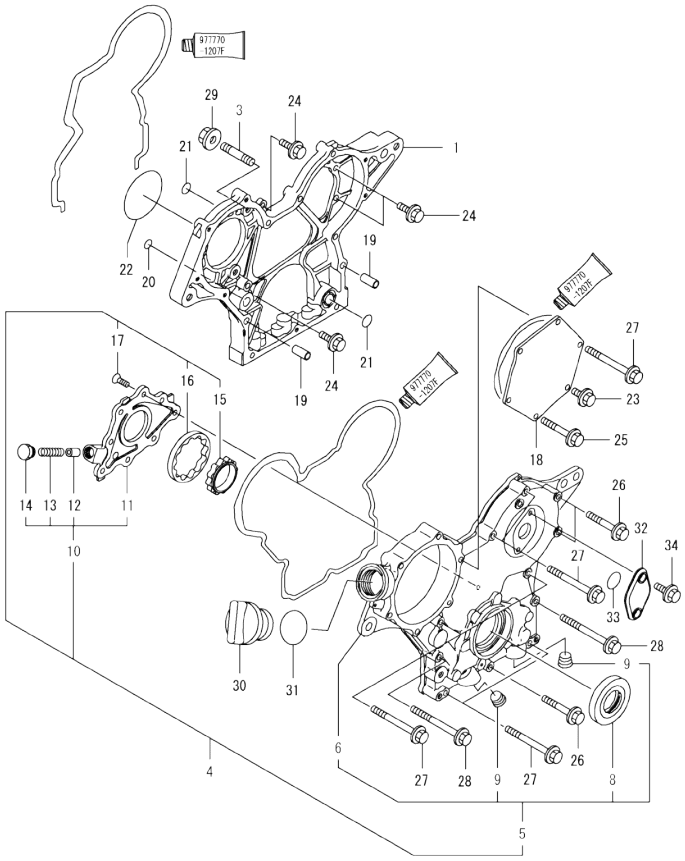




(A)=3TNV70-XPLW (D)=
(B)= (E)=
(C)= (F)=

| No. | Lev. | Parts No. | Description | Q'ty (A) | (B) | (C) | (D) | (E) | (F) | I | R |
|---|---|---|---|---|---|---|---|---|---|---|---|
| 1 | 1 | 119717-01501 | CASE, GEAR | 1 | | | | | | | |
| 3 | 1 | 119717-01570 | STUD | 3 | | | | | | | |
| 4 | 1 | 119734-01580 | CASE ASSY | 1 | | | | | | | |
| 5 | 2 | 719734-01510 | CASE ASSY | 1 | | | | | | | |
| 6 | 3 | 119744-01521 | COVER | 1 | | | | | | | |
| 8 | 3 | 119717-01800 | SEAL, OIL | 1 | | | | | | | |
| 9 | 3 | 23876-030000 | PLUG | 2 | | | | | | | |
| 10 | 2 | 119717-32100 | COVER ASSY | 1 | | | | | | | |
| 11 | 3 | 119717-32080 | COVER | 1 | | | | | | | |
| 12 | 3 | 129900-32130 | VALVE, RELIEF | 1 | | | | | | | |
| 13 | 3 | 129001-32320 | SPRING | 1 | | | | | | | |
| 14 | 3 | 129001-32330 | PLUG | 1 | | | | | | | |
| 15 | 2 | 119717-32110 | ROTOR | 1 | | | | | | | |
| 16 | 2 | 119717-32120 | ROTOR | 1 | | | | | | | |
| 17 | 2 | 119802-32130 | SCREW | 8 | | | | | | | |
| 18 | 1 | 119717-01750 | COVER | 1 | | | | | | | |
| 19 | 1 | 119660-01911 | PIPE | 4 | | | | | | | |
| 20 | 1 | 119624-32040 | O-RING | 1 | | | | | | | |
| 21 | 1 | 119717-32050 | O-RING | 3 | | | | | | | |
| 22 | 1 | 121850-51960 | O-RING | 1 | | | | | | | |
| 23 | 1 | 26106-060122 | BOLT | 1 | | | | | | | |
| 24 | 1 | 26106-060162 | BOLT | 4 | | | | | | | |
| 25 | 1 | 26106-060402 | BOLT | 4 | | | | | | | |
| 26 | 1 | 26106-060402 | BOLT | 3 | | | | | | | |
| 27 | 1 | 26106-060602 | BOLT | 7 | | | | | | | |
| 28 | 1 | 26106-060652 | BOLT | 2 | | | | | | | |
| 29 | 1 | 26306-080002 | NUT | 3 | | | | | | | |
| 30 | 1 | 124160-01751 | COVER | 1 | | | | | | | |
| 31 | 1 | 24311-000320 | O-RING | 1 | | | | | | | |
| 32 | 1 | 121023-01551 | COVER | 1 | | | | | | | |
| 33 | 1 | 24341-000240 | O-RING | 1 | | | | | | | |
| 34 | 1 | 26106-060162 | BOLT | 2 | | | | | | | |

N:Old ←Yes/No→ New. Q:Old ←No/Yes→ New. R:Old ←Yes/Yes→ New. S:Old ←No/No→ New. W:Add. Z:Discontinued. F:Interchangeable by set. K:Q'ty Change

Copyright (C) 2013 YANMAR GLOBAL CS CO., LTD. All RightsReserved.

# Fig.3. MOUNTING FLANGE & OIL SUMP

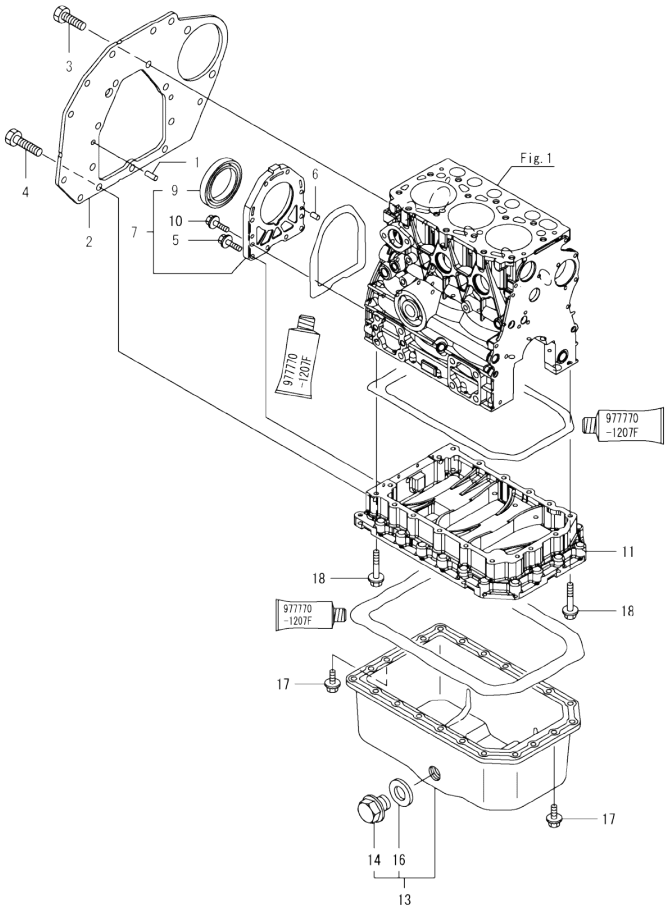




(A)=3TNV70-XPLW (D)=
(B)= (E)=
(C)= (F)=

| No. | Lev. | Parts No. | Description | Q'ty (A) | (B) | (C) | (D) | (E) | (F) | I | R |
|---|---|---|---|---|---|---|---|---|---|---|---|
| 1 | 1 | 129100-01580 | PIN | 2 | | | | | | | |
| 2 | 1 | 119718-01600 | FLANGE | 1 | | | | | | | |
| 3 | 1 | 26206-100202 | BOLT | 7 | | | | | | | |
| 4 | 1 | 26206-100252 | BOLT | 3 | | | | | | | |
| 5 | 1 | 119285-01580 | BOLT | 4 | | | | | | | |
| 6 | 1 | 119620-01620 | PIN | 2 | | | | | | | |
| 7 | 1 | 119718-01640 | CASE ASSY | 1 | | | | | | | |
| 9 | 2 | 119734-02220 | SEAL, OIL | 1 | | | | | | | |
| 10 | 1 | 26106-060222 | BOLT | 6 | | | | | | | |
| 11 | 1 | 119515-01740 | SPACER | 1 | | | | | | | |
| 13 | 1 | 119810-01770 | SUMP ASSY, OIL | 1 | | | | | | | |
| 14 | 2 | 119640-01640 | PLUG | 1 | | | | | | | |
| 16 | 2 | 22190-220002 | WASHER, SEAL | 1 | | | | | | | |
| 17 | 1 | 26106-060452 | BOLT | 17 | | | | | | | |
| 18 | 1 | 26106-080122 | BOLT | 22 | | | | | | | |

N:Old ←Yes/No→ New. Q:Old ←No/Yes→ New. R:Old ←Yes/Yes→ New. S:Old ←No/No→ New. W:Add. Z:Discontinued. F:Interchangeable by set. K:Q'ty Change

Copyright (C) 2013 YANMAR GLOBAL CS CO., LTD. All RightsReserved.

# Fig.4. CYLINDER HEAD & BONNET



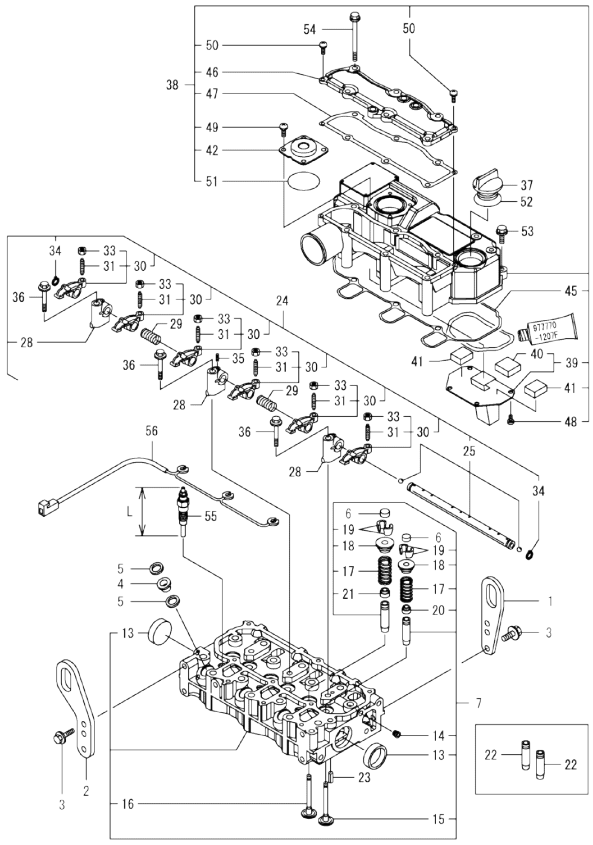


(A)=3TNV70-XPLW
(B)=
(C)=
(D)=
(E)=
(F)=

| No. | Lev. | Parts No. | Description | Q'ty (A) | (B) | (C) | (D) | (E) | (F) | I | R |
|---|---|---|---|---|---|---|---|---|---|---|---|
| 1 | 1 | 119226-07900 | LIFTER | 1 | | | | | | | |
| 2 | 1 | 129486-07901 | LIFTER | 1 | | | | | | | |
| 3 | 1 | 26106-080142 | BOLT | 4 | | | | | | | |
| 4 | 1 | 129901-11450 | PROTECTOR | 3 | | | | | | | |
| 5 | 1 | 119600-11460 | GASKET | 6 | | | | | | | |
| 6 | 1 | 105010-11490 | CAP | 6 | | | | | | | |
| 7 | 1 | 119515-11740 | HEAD ASSY, CYLINDER | 1 | | | | | | | |
| 13 | 2 | 119285-11990 | PLUG | 2 | | | | | | | |
| 14 | 2 | 23876-005000 | PLUG | 1 | | | | | | | |
| 15 | 2 | 119515-11101 | VALVE | 3 | | | | | | | |
| 16 | 2 | 119515-11110 | VALVE | 3 | | | | | | | |
| 17 | 2 | 119717-11131 | SPRING | 6 | | | | | | | |
| 18 | 2 | 129508-11180 | RETAINER | 6 | | | | | | | |
| 19 | 2 | 119717-11190 | COTTER | 12 | | | | | | | |
| 20 | 2 | 119717-11340 | SEAL, VALVE STEM | 3 | | | | | | | |
| 21 | 2 | 119717-11350 | SEAL, VALVE STEM | 3 | | | | | | | |
| 22 | 1 | 119515-11800 | GUIDE | 6 | | | | | | | 1 |
| 23 | 1 | 22351-060012 | PIN, SPRING | 2 | | | | | | | |
| 24 | 1 | 119515-11200 | SUPPORT ASSY | 1 | | | | | | | |
| 25 | 2 | 119515-11240 | SHAFT ASSY | 1 | | | | | | | |
| 28 | 2 | 119717-11260 | SUPPORT | 3 | | | | | | | |
| 29 | 2 | 119515-11280 | SPRING | 2 | | | | | | | |
| 30 | 2 | 119717-11650 | ARM, ROCKER | 6 | | | | | | | |
| 31 | 3 | 129150-11230 | SCREW | 6 | | | | | | | |
| 33 | 3 | 129150-11750 | NUT | 6 | | | | | | | |
| 34 | 2 | 22242-000120 | RING | 2 | | | | | | | |
| 35 | 2 | 26979-050162 | SCREW | 1 | | | | | | | |
| 36 | 1 | 26106-080402 | BOLT | 3 | | | | | | | |
| 37 | 1 | 124160-01751 | COVER | 1 | | | | | | | |
| 38 | 1 | 119516-11380 | BONNET ASSY | 1 | | | | | | | |
| 39 | 2 | 119717-03031 | PLATE | 1 | | | | | | | |
| 40 | 3 | 119717-03070 | BAFFLE | 1 | | | | | | | |
| 41 | 2 | 119717-03070 | BAFFLE | 2 | | | | | | | |
| 42 | 2 | 129006-03120 | COVER | 1 | | | | | | | |
| 45 | 2 | 119515-11310 | GASKET | 1 | | | | | | | |
| 46 | 2 | 119515-11320 | COVER | 1 | | | | | | | |
| 47 | 2 | 119515-11330 | GASKET | 1 | | | | | | | |
| 48 | 2 | 22857-500100 | SCREW | 4 | | | | | | | |
| 49 | 2 | 22857-500100 | SCREW | 4 | | | | | | | |
| 50 | 2 | 22857-500160 | SCREW | 2 | | | | | | | |
| 51 | 2 | 24341-000400 | O-RING | 1 | | | | | | | |
| 52 | 1 | 24311-000320 | O-RING | 1 | | | | | | | |
| 53 | 1 | 26106-060202 | BOLT | 3 | | | | | | | |
| 54 | 1 | 26106-060752 | BOLT | 6 | | | | | | | |
| 55 | 1 | 119718-77801 | PLUG, GLOW | 3 | | | | | | | 2 |
| 56 | 1 | 119717-77852 | CONNECTOR | 1 | | | | | | | |

Remarks
(1)Spare part.
(2)L=66M/M.

N:Old $\frac{\text{Yes}}{\text{No}}$ New. Q:Old $\frac{\text{No}}{\text{Yes}}$ New. R:Old $\frac{\text{Yes}}{\text{Yes}}$ New. S:Old $\frac{\text{No}}{\text{No}}$ New. W:Add. Z:Discontinued. F:Interchangeable by set. K:Q'ty Change

Copyright (C) 2013 YANMAR GLOBAL CS CO., LTD. All RightsReserved.

# Fig.5. AIR CLEANER

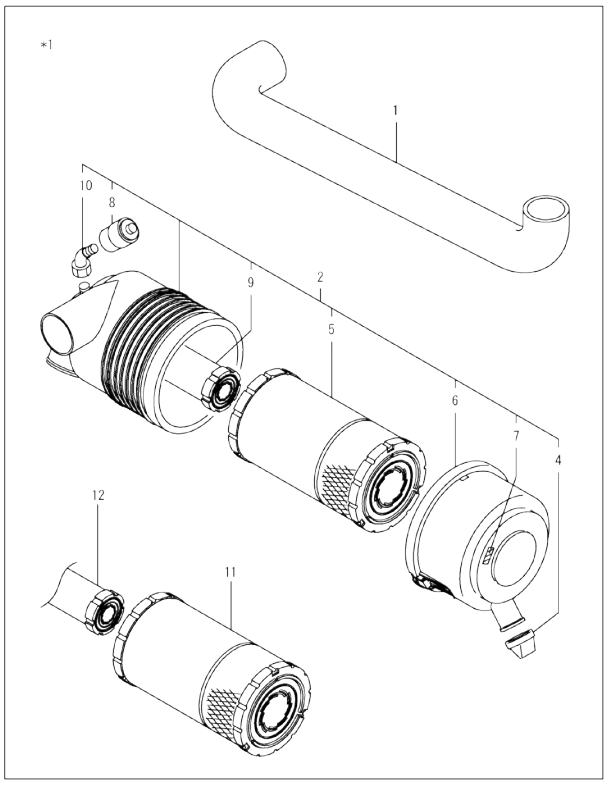




(A)=3TNV70-XPLW (D)=
(B)= (E)=
(C)= (F)=

| No. | Lev. | Parts No. | Description | Q'ty (A) | (B) | (C) | (D) | (E) | (F) | I | R |
|---|---|---|---|---|---|---|---|---|---|---|---|
| 1 | 1 | 119632-12211 | PIPE | 1 | | | | | | | |
| 2 | 1 | 119626-12502 | AIR CLEANER ASSY | 1 | | | | | | | |
| 4 | 2 | 119808-12540 | VALVE, UNLOADER | 1 | | | | | | | |
| 5 | 2 | 119655-12560 | ELEMENT | 1 | | | | | | | |
| 6 | 2 | 105027-12570 | COVER | 1 | | | | | | | |
| 7 | 2 | 129612-12650 | LABEL, MARKING | 1 | | | | | | | |
| 8 | 2 | 126650-12680 | INDICATOR | 1 | | | | | | | |
| 9 | 2 | 119233-12700 | ELEMENT | 1 | | | | | | | |
| 10 | 2 | 119626-12800 | ORIFICE | 1 | | | | | | | |
| 11 | 1 | 119655-12560 | ELEMENT | 1 | | | | | | | |
| 12 | 1 | 119233-12700 | ELEMENT | 1 | | | | | | | |

Remarks
*1.Accessory.

N:Old $\frac{\text{Yes}}{\text{No}}$ New. Q:Old $\frac{\text{No}}{\text{Yes}}$ New. R:Old $\frac{\text{Yes}}{\text{Yes}}$ New. S:Old $\frac{\text{No}}{\text{No}}$ New. W:Add. Z:Discontinued. F:Interchangeable by set. K:Q'ty Change

Copyright (C) 2013 YANMAR GLOBAL CS CO., LTD. All RightsReserved.

# Fig.6. EXHAUST MANIFOLD



(A)=3TNV70-XPLW
(B)=
(C)=
(D)=
(E)=
(F)=

| No. | Lev. | Parts No. | Description | Q'ty (A) | (B) | (C) | (D) | (E) | (F) | I | R |
|---|---|---|---|---|---|---|---|---|---|---|---|
| 1 | 1 | 119718-13100 | MANIFOLD | 1 | | | | | | | |
| 2 | 1 | 119717-13110 | GASKET | 1 | | | | | | | |
| 3 | 1 | 119717-13600 | STUD | 2 | | | | | | | |
| 4 | 1 | 119802-13620 | BOLT | 4 | | | | | | | |
| 5 | 1 | 119131-18320 | STUD | 4 | | | | | | | |
| 6 | 1 | 26306-080002 | NUT | 2 | | | | | | | |
| 7 | 1 | 119515-13200 | GASKET | 1 | | | | | | | |

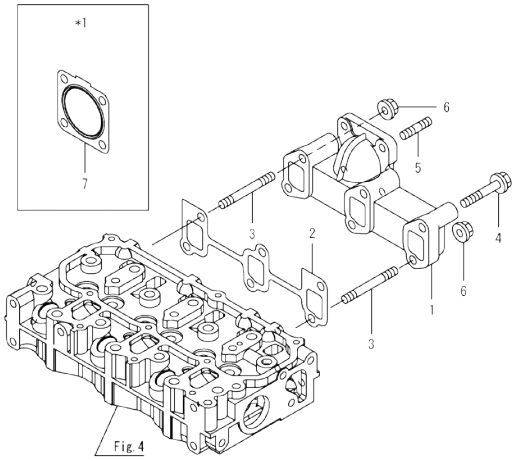


Remarks
*1.Accessory.

N:Old ◄Yes/No► New. Q:Old ◄No/Yes► New. R:Old ◄Yes/Yes► New. S:Old ◄No/No► New. W:Add. Z:Discontinued. F:Interchangeable by set. K:Q'ty Change

Copyright (C) 2013 YANMAR GLOBAL CS CO., LTD. All RightsReserved.

# Fig.7. CAMSHAFT & DRIVING GEAR



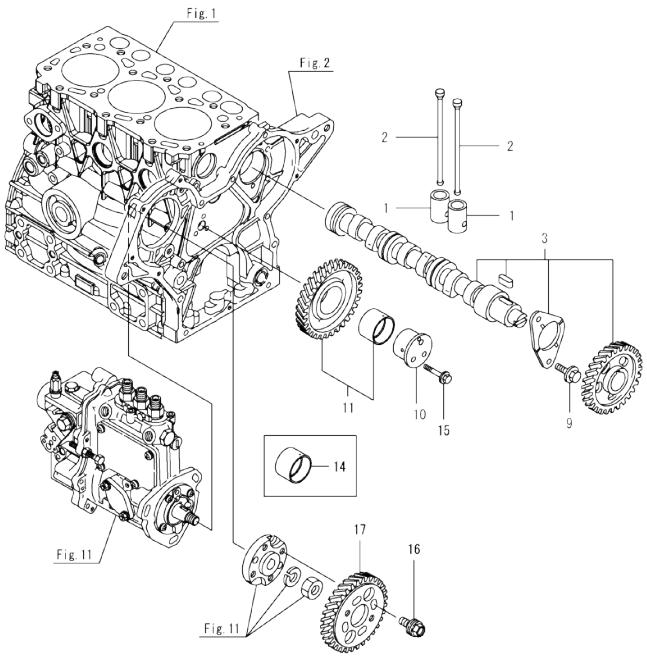


(A)=3TNV70-XPLW (D)=
(B)= (E)=
(C)= (F)=

| No. | Lev. | Parts No. | Description | Q'ty (A) | (B) | (C) | (D) | (E) | (F) | I | R |
|---|---|---|---|---|---|---|---|---|---|---|---|
| 1 | 1 | 119620-14200 | TAPPET | 6 | | | | | | | |
| 2 | 1 | 119515-14400 | ROD, PUSH | 6 | | | | | | | |
| 3 | 1 | 119515-14581 | CAMSHAFT ASSY | 1 | | | | | | | |
| 9 | 1 | 26106-060122 | BOLT | 2 | | | | | | | |
| 10 | 1 | 119717-25050 | SHAFT | 1 | | | | | | | |
| 11 | 1 | 119717-25101 | GEAR ASSY | 1 | | | | | | | |
| 14 | 1 | 119717-25911 | BUSH | 1 | | | | | | | 1 |
| 15 | 1 | 26106-060352 | BOLT | 3 | | | | | | | |
| 16 | 1 | 129150-25301 | BOLT | 4 | | | | | | | |
| 17 | 1 | 119717-25930 | GEAR, PUMP | 1 | | | | | | | |

Remarks
(1)Spare part.

N:Old ←Yes/No→ New. Q:Old ←No/Yes→ New, R:Old ←Yes/Yes→ New. S:Old ←No/No→ New. W:Add. Z:Discontinued. F:Interchangeable by set. K:Q'ty Change

Copyright (C) 2013 YANMAR GLOBAL CS CO., LTD. All RightsReserved.

# Fig.8. CRANKSHAFT & PISTON



(A)=3TNV70-XPLW
(B)=
(C)=
(D)=
(E)=
(F)=

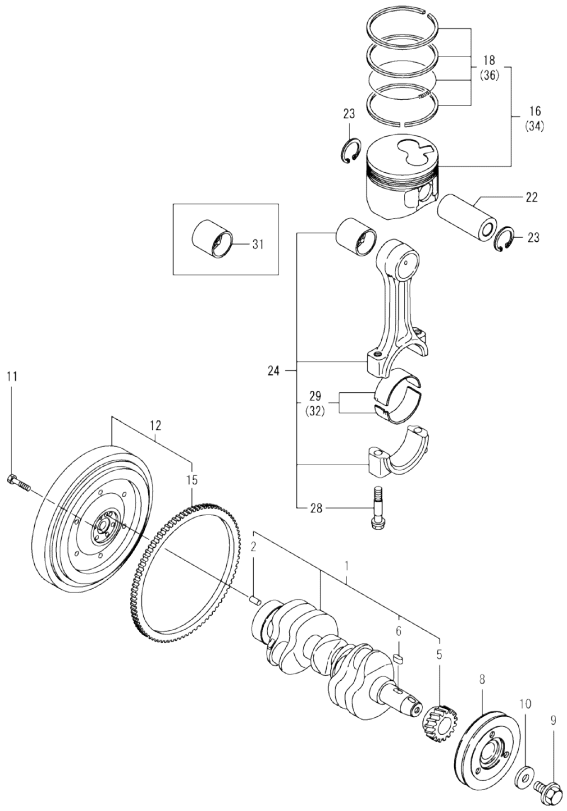


| No. | Lev. | Parts No. | Description | Q'ty (A) | (B) | (C) | (D) | (E) | (F) | I | R |
|---|---|---|---|---|---|---|---|---|---|---|---|
| 1 | 1 | 119515-21700 | CRANKSHAFT ASSY | 1 | | | | | | | |
| 2 | 2 | 129100-01580 | PIN | 1 | | | | | | | |
| 5 | 2 | 119717-21200 | GEAR, CRANKSHAFT | 1 | | | | | | | |
| 6 | 2 | 22512-040120 | KEY | 1 | | | | | | | |
| 8 | 1 | 119515-21650 | V-PULLEY | 1 | | | | | | | |
| 9 | 1 | 119621-21681 | BOLT | 1 | | | | | | | |
| 10 | 1 | 119620-21941 | WASHER | 1 | | | | | | | |
| 11 | 1 | 119620-21500 | BOLT | 5 | | | | | | | |
| 12 | 1 | 119385-21580 | FLYWHEEL ASSY | 1 | | | | | | | |
| 15 | 2 | 124060-21600 | GEAR | 1 | | | | | | | |
| 16 | 1 | 119516-22020 | PISTON ASSY | 3 | | | | | | | |
| 18 | 2 | 119515-22500 | RING SET, PISTON | 3 | | | | | | | |
| 22 | 1 | 119515-22300 | PIN | 3 | | | | | | | |
| 23 | 1 | 22252-000220 | RING | 6 | | | | | | | |
| 24 | 1 | 119515-23000 | ROD ASSY, CONNECTING | 3 | | | | | | | |
| 28 | 2 | 119717-23200 | BOLT | 6 | | | | | | | |
| 29 | 2 | 119515-23601 | METAL, CRANK PIN | 3 | | | | | | | |
| 31 | 1 | 119717-23910 | METAL, PISTON PIN | 3 | | | | | | | 1 |
| 32 | 1 | 119515-23611 | METAL ASSY, 0.25 | 3 | | | | | | | 2 |
| 34 | 1 | 119516-22030 | PISTON ASSY, 0.25 OS | 3 | | | | | | | 3 |
| 36 | 2 | 119515-22550 | RING SET, PISTON .25 | 3 | | | | | | | 3 |

Remarks
(1)Spare part.
(2)Under-sized(U.S.=0.25)part.
(3)Over-sized(O.S.=0.25)part.

N:Old ←Yes/No→ New. Q:Old ←No/Yes→ New, R:Old ←Yes/Yes→ New. S:Old ←No/No→ New. W:Add. Z:Discontinued. F:Interchangeable by set. K:Q'ty Change

Copyright (C) 2013 YANMAR GLOBAL CS CO., LTD. All RightsReserved.

# Fig.9. LUB.OIL SYSTEM

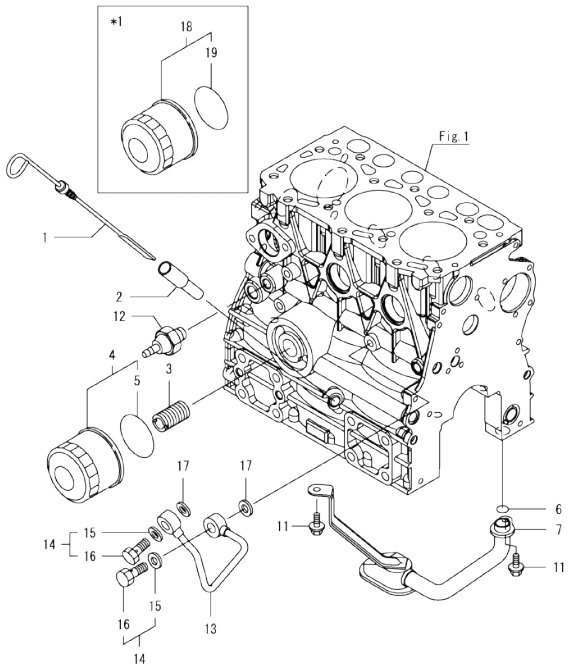


Remarks
*1.Accessory.



(A)=3TNV70-XPLW (D)=
(B)= (E)=
(C)= (F)=

| No. | Lev. | Parts No. | Description | Q'ty (A) | (B) | (C) | (D) | (E) | (F) | I | R |
|---|---|---|---|---|---|---|---|---|---|---|---|
| 1 | 1 | 119515-34801 | DIPSTICK | 1 | | | | | | | |
| 2 | 1 | 121520-34810 | GUIDE | 1 | | | | | | | |
| 3 | 1 | 119717-35140 | BOLT | 1 | | | | | | | |
| 4 | 1 | 119660-35150 | FILTER, LUB. OIL | 1 | | | | | | | |
| 5 | 2 | 124450-35110 | O-RING | 1 | | | | | | | |
| 6 | 1 | 119717-32060 | O-RING | 1 | | | | | | | |
| 7 | 1 | 119515-35080 | PIPE ASSY | 1 | | | | | | | |
| 11 | 1 | 26106-060102 | BOLT | 2 | | | | | | | |
| 12 | 1 | 114250-39450 | SWITCH | 1 | | | | | | | |
| 13 | 1 | 119717-39210 | PIPE | 1 | | | | | | | |
| 14 | 1 | 129005-59830 | BOLT ASSY | 2 | | | | | | | |
| 15 | 2 | 22190-080002 | WASHER, SEAL | 2 | | | | | | | |
| 16 | 2 | 23857-030000 | BOLT | 2 | | | | | | | |
| 17 | 1 | 22190-080002 | WASHER, SEAL | 2 | | | | | | | |
| 18 | 1 | 119660-35150 | FILTER, LUB. OIL | 1 | | | | | | | |
| 19 | 2 | 124450-35110 | O-RING | 1 | | | | | | | |

N:Old ←Yes/No→ New. Q:Old ←No/Yes→ New, R:Old ←Yes/Yes→ New, S:Old ←No/No→ New. W:Add. Z:Discontinued. F:Interchangeable by set. K:Q'ty Change

Copyright (C) 2013 YANMAR GLOBAL CS CO., LTD. All RightsReserved.

# Fig.10. COOLING WATER SYSTEM



(A)=3TNV70-XPLW
(B)=
(C)=
(D)=
(E)=
(F)=

| No. | Lev. | Parts No. | Description | Q'ty (A) | (B) | (C) | (D) | (E) | (F) | I | R |
|---|---|---|---|---|---|---|---|---|---|---|---|
| 1 | 1 | 119515-42002 | PUMP ASSY, CW | 1 | | | | | | | |
| 3 | 2 | 119717-42031 | GASKET | 1 | | | | | | | |
| 4 | 2 | 119515-42041 | COVER | 1 | | | | | | | |
| 9 | 2 | 119C10-42320 | O-RING, 2028 | 1 | | | | | | | |
| 10 | 2 | 26577-060122 | SCREW | 4 | | | | | | | |
| 11 | 2 | 27241-250000 | PLUG | 1 | | | | | | | |
| 12 | 1 | 119515-42020 | GASKET | 1 | | | | | | | |
| 13 | 1 | 23414-080000 | GASKET | 1 | | | | | | | |
| 14 | 1 | 26106-080122 | BOLT | 1 | | | | | | | |
| 15 | 1 | 26106-080502 | BOLT | 3 | | | | | | | |
| 16 | 1 | 119717-42350 | V-PULLEY | 1 | | | | | | | |
| 17 | 1 | 26106-060122 | BOLT | 4 | | | | | | | |
| 18 | 1 | 124101-49531 | COVER | 1 | | | | | | | |
| 19 | 1 | 119717-49800 | THERMOSTAT | 1 | | | | | | | |
| 20 | 1 | 26106-080252 | BOLT | 1 | | | | | | | |
| 21 | 1 | 26106-080652 | BOLT | 1 | | | | | | | |
| 22 | 1 | 119620-49290 | COCK ASSY | 1 | | | | | | | |
| 26 | 1 | 121450-42450 | PLUG | 1 | | | | | | | |
| 27 | 1 | 121250-44901 | SWITCH | 1 | | | | | | | |
| 28 | 1 | 124465-44950 | GASKET | 1 | | | | | | | |
| 29 | 1 | 124465-44950 | GASKET | 1 | | | | | | | |
| 30 | 1 | 119645-49020 | PIPE | 1 | | | | | | | |

Remarks
*1.Accessory.

N:Old ◄Yes/No► New. Q:Old ◄No/Yes► New. R:Old ◄Yes/Yes► New. S:Old ◄No/No► New. W:Add. Z:Discontinued. F:Interchangeable by set. K:Q'ty Change

Copyright (C) 2013 YANMAR GLOBAL CS CO., LTD. All RightsReserved.

# Fig.11. FUEL INJECTION PUMP



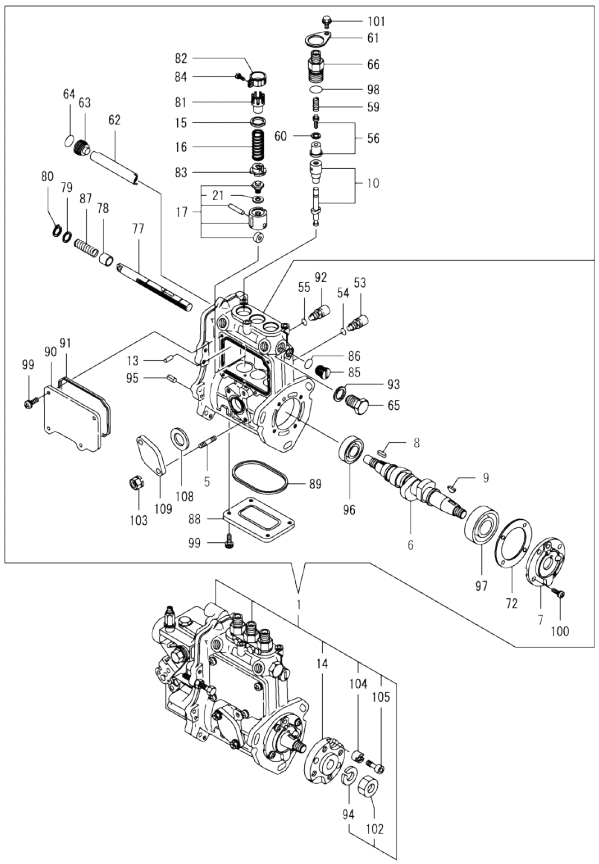


Remarks
(1)Governor(Fig.12)is incorporated in this Fuel Injection Pump (Ref.1).

(A)=3TNV70-XPLW (D)=
(B)= (E)=
(C)= (F)=

| No. | Lev. | Parts No. | Description | Q'ty (A) | (B) | (C) | (D) | (E) | (F) | I | R |
|---|---|---|---|---|---|---|---|---|---|---|---|
| 1 | 1 | 719515-51390 | PUMP ASSY | 1 | | | | | | | 1 |
| 5 | 2 | 129155-51020 | STUD | 2 | | | | | | | |
| 6 | 2 | 119717-51030 | CAMSHAFT | 1 | | | | | | | |
| 7 | 2 | 119717-51060 | SUPPORT | 1 | | | | | | | |
| 8 | 2 | 119717-51070 | KEY | 1 | | | | | | | |
| 9 | 2 | 122710-51090 | KEY | 1 | | | | | | | |
| 10 | 2 | 119515-51100 | PLUNGER ASSY | 3 | | | | | | | |
| 13 | 2 | 129155-51140 | PIN | 3 | | | | | | | |
| 14 | 2 | 119717-51150 | FLANGE | 1 | | | | | | | |
| 15 | 2 | 158600-51170 | RETAINER | 3 | | | | | | | |
| 16 | 2 | 119717-51190 | SPRING | 3 | | | | | | | |
| 17 | 2 | 119717-51200 | TAPPET ASSY | 3 | | | | | | | |
| 21 | 3 | 129155-51600 | SHIM SET | 3 | | | | | | | |
| 53 | 2 | 158600-51270 | STOPPER | 3 | | | | | | | |
| 54 | 2 | 129155-51280 | O-RING | 3 | | | | | | | |
| 55 | 2 | 129155-51280 | O-RING | 1 | | | | | | | |
| 56 | 2 | 119717-51300 | VALVE ASSY, DELIVERY | 3 | | | | | | | |
| 59 | 2 | 119717-51330 | SPRING | 3 | | | | | | | |
| 60 | 2 | 124550-51350 | GASKET | 3 | | | | | | | |
| 61 | 2 | 119125-51370 | RETAINER | 3 | | | | | | | |
| 62 | 2 | 129155-51400 | DEFLECTOR | 1 | | | | | | | |
| 63 | 2 | 158600-51410 | PLUG | 1 | | | | | | | |
| 64 | 2 | 119717-51420 | O-RING | 1 | | | | | | | |
| 65 | 2 | 158600-51420 | PLUG | 1 | | | | | | | |
| 66 | 2 | 158600-51442 | VALVE ASSY, DELIVERY | 3 | | | | | | | |
| 72 | 2 | 129155-51450 | SHIM SET | 1 | | | | | | | |
| 77 | 2 | 119717-51500 | RACK | 1 | | | | | | | |
| 78 | 2 | 119025-51520 | BUSH,RACK | 1 | | | | | | | |
| 79 | 2 | 129155-51530 | SPACER | 1 | | | | | | | |
| 80 | 2 | 129155-51540 | CIRCLIP | 1 | | | | | | | |
| 81 | 2 | 129155-51550 | PINION | 3 | | | | | | | |
| 82 | 2 | 129100-51560 | PINION | 3 | | | | | | | |
| 83 | 2 | 119717-51570 | RETAINER | 3 | | | | | | | |
| 84 | 2 | 129100-51570 | SCREW | 3 | | | | | | | |
| 85 | 2 | 158600-51570 | PLUG | 1 | | | | | | | |
| 86 | 2 | 129155-51580 | O-RING | 1 | | | | | | | |
| 87 | 2 | 129155-51591 | SPRING | 1 | | | | | | | |
| 88 | 2 | 129155-51701 | COVER | 1 | | | | | | | |
| 89 | 2 | 119717-51711 | GASKET | 1 | | | | | | | |
| 90 | 2 | 119717-51750 | COVER | 1 | | | | | | | |
| 91 | 2 | 119717-51761 | GASKET | 1 | | | | | | | |
| 92 | 2 | 158600-51790 | STOPPER | 1 | | | | | | | |
| 93 | 2 | 22190-160002 | WASHER, SEAL | 1 | | | | | | | |
| 94 | 2 | 22217-120000 | WASHER, SPRING | 1 | | | | | | | |
| 95 | 2 | 22351-050010 | PIN, SPRING | 2 | | | | | | | |
| 96 | 2 | 24101-060034 | BEARING, BALL | 1 | | | | | | | |
| 97 | 2 | 24101-063034 | BEARING, BALL | 1 | | | | | | | |
| 98 | 2 | 24316-000150 | O-RING | 3 | | | | | | | |
| 99 | 2 | 26022-050122 | SCREW | 8 | | | | | | | |
| 100 | 2 | 119125-51900 | BOLT, 6 X 14 | 4 | | | | | | | |
| 101 | 2 | 26106-050102 | BOLT | 3 | | | | | | | |

N:Old ←Yes/No→ New. Q:Old ←No/Yes→ New. R:Old ←Yes/Yes→ New. S:Old ←No/No→ New. W:Add. Z:Discontinued. F:Interchangeable by set. K:Q'ty Change

++ CONTINUE ++

Copyright (C) 2013 YANMAR GLOBAL CS CO., LTD. All RightsReserved.

# Fig.11. FUEL INJECTION PUMP



(A)=3TNV70-XPLW
(B)=
(C)=
(D)=
(E)=
(F)=

| No. | Lev. | Parts No. | Description | Q'ty (A) | (B) | (C) | (D) | (E) | (F) | I | R |
|---|---|---|---|---|---|---|---|---|---|---|---|
| 102 | 2 | 26716-120002 | NUT | 1 | | | | | | | |
| 103 | 2 | 119717-51860 | NUT | 2 | | | | | | | |
| 104 | 2 | 119717-51481 | COLLAR, FIC FIX | 1 | | | | | | | |
| 105 | 2 | 119717-51491 | BOLT, FIXATION | 1 | | | | | | | |
| 108 | 2 | 129155-52051 | GASKET | 1 | | | | | | | |
| 109 | 2 | 129100-52200 | COVER | 1 | | | | | | | |

Remarks
(1)Governor(Fig.12)is incorporated in
this Fuel Injection Pump (Ref.1).

N:Old ←Yes/No→ New. Q:Old ←No/Yes→ New, R:Old ←Yes/Yes→ New. S:Old ←No/No→ New. W:Add. Z:Discontinued. F:Interchangeable by set. K:Q'ty Change

Copyright (C) 2013 YANMAR GLOBAL CS CO., LTD. All RightsReserved.

# Fig.12. GOVERNOR

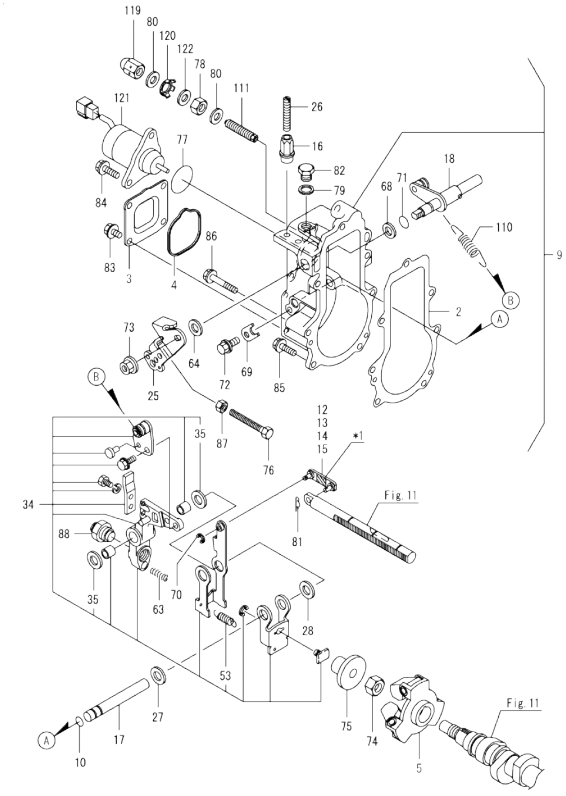


Remarks
*This figure(Governor)is incorporated in the Fuel Injection Pump (Fig.11).
*1.Classified mark.
(1)Selective parts, mark; 3
(2)Selective parts, mark; 98
(3)Selective parts, mark; 88
(4)Selective parts, mark; 03



(A)=3TNV70-XPLW (D)=
(B)= (E)=
(C)= (F)=

| No. | Lev. | Parts No. | Description | Q'ty (A) | (B) | (C) | (D) | (E) | (F) | I | R |
|---|---|---|---|---|---|---|---|---|---|---|---|
| 2 | 2 | 119717-61050 | GASKET | 1 | | | | | | | |
| 3 | 2 | 119717-61060 | COVER | 1 | | | | | | | |
| 4 | 2 | 119717-61070 | GASKET | 1 | | | | | | | |
| 5 | 2 | 119717-61201 | WEIGHT ASSY | 1 | | | | | | | |
| 9 | 2 | 119515-61300 | CASE ASSY | 1 | | | | | | | |
| 10 | 3 | 129155-51280 | O-RING | 1 | | | | | | | |
| 12 | 3 | 119717-61120 | LINK | 1 | | | | | | | 1 |
| 13 | 3 | 119717-61130 | LINK | 1 | | | | | | | 2 |
| 14 | 3 | 119717-61140 | LINK | 1 | | | | | | | 3 |
| 15 | 3 | 119717-61150 | LINK | 1 | | | | | | | 4 |
| 16 | 3 | 129209-61370 | NUT | 1 | | | | | | | |
| 17 | 3 | 129052-61390 | SHAFT | 1 | | | | | | | |
| 18 | 3 | 119415-61401 | SHAFT ASSY, CONTROL | 1 | | | | | | | |
| 25 | 3 | 119515-61440 | LEVER | 1 | | | | | | | |
| 26 | 3 | 121575-66830 | SCREW | 1 | | | | | | | |
| 27 | 3 | 129156-61460 | SHIM | 1 | | | | | | | |
| 28 | 3 | 129155-61480 | SPACER | 1 | | | | | | | |
| 34 | 3 | 119516-61500 | LEVER ASSY | 1 | | | | | | | |
| 35 | 4 | 174307-51700 | SHIM SET | 2 | | | | | | | |
| 53 | 4 | 129486-61540 | SPRING | 1 | | | | | | | |
| 63 | 3 | 129486-61650 | SPRING | 1 | | | | | | | |
| 64 | 3 | 158552-61700 | SHIM SET | 1 | | | | | | | |
| 68 | 3 | 158552-61710 | SHIM | 1 | | | | | | | |
| 69 | 3 | 119660-61901 | RETAINER | 1 | | | | | | | |
| 70 | 3 | 22272-000030 | RING | 1 | | | | | | | |
| 71 | 3 | 24341-000070 | O-RING | 1 | | | | | | | |
| 72 | 3 | 26106-060102 | BOLT | 1 | | | | | | | |
| 73 | 3 | 26366-080002 | NUT | 1 | | | | | | | |
| 74 | 2 | 129008-61301 | NUT | 1 | | | | | | | |
| 75 | 2 | 129155-61341 | SLEEVE | 1 | | | | | | | |
| 76 | 2 | 171353-61460 | BOLT | 1 | | | | | | | |
| 77 | 2 | 158552-61900 | O-RING | 1 | | | | | | | |
| 78 | 2 | 129209-61920 | NUT | 1 | | | | | | | |
| 79 | 2 | 22190-100002 | WASHER, SEAL | 1 | | | | | | | |
| 80 | 2 | 22190-120002 | WASHER, SEAL | 2 | | | | | | | |
| 81 | 2 | 22372-040000 | PIN, SNAP | 1 | | | | | | | |
| 82 | 2 | 119717-51930 | PLUG,M10 | 1 | | | | | | | |
| 83 | 2 | 26106-060102 | BOLT | 4 | | | | | | | |
| 84 | 2 | 26106-060142 | BOLT | 2 | | | | | | | |
| 85 | 2 | 26106-060202 | BOLT | 4 | | | | | | | |
| 86 | 2 | 26106-060452 | BOLT | 3 | | | | | | | |
| 87 | 2 | 26756-060002 | NUT | 1 | | | | | | | |
| 88 | 2 | 119740-61550 | ANGLEICH ASSY | 1 | | | | | | | |
| 110 | 2 | 119516-61700 | SPRING | 1 | | | | | | | |
| 111 | 2 | 158601-61710 | LIMITER ASSY | 1 | | | | | | | |
| 119 | 2 | 129209-61930 | NUT | 1 | | | | | | | |
| 120 | 2 | 129209-61970 | PLATE | 1 | | | | | | | |
| 121 | 2 | 119233-77932 | SOLENOID | 1 | | | | | | | |
| 122 | 2 | 23414-120016 | GASKET | 1 | | | | | | | |

N:Old ←Yes/No→ New. Q:Old ←No/Yes→ New. R:Old ←Yes/Yes→ New. S:Old ←No/No→ New. W:Add. Z:Discontinued. F:Interchangeable by set. K:Q'ty Change

Copyright (C) 2013 YANMAR GLOBAL CS CO., LTD. All RightsReserved.

# Fig.13. FUEL INJECTION VALVE



(A)=3TNV70-XPLW
(B)=
(C)=
(D)=
(E)=
(F)=

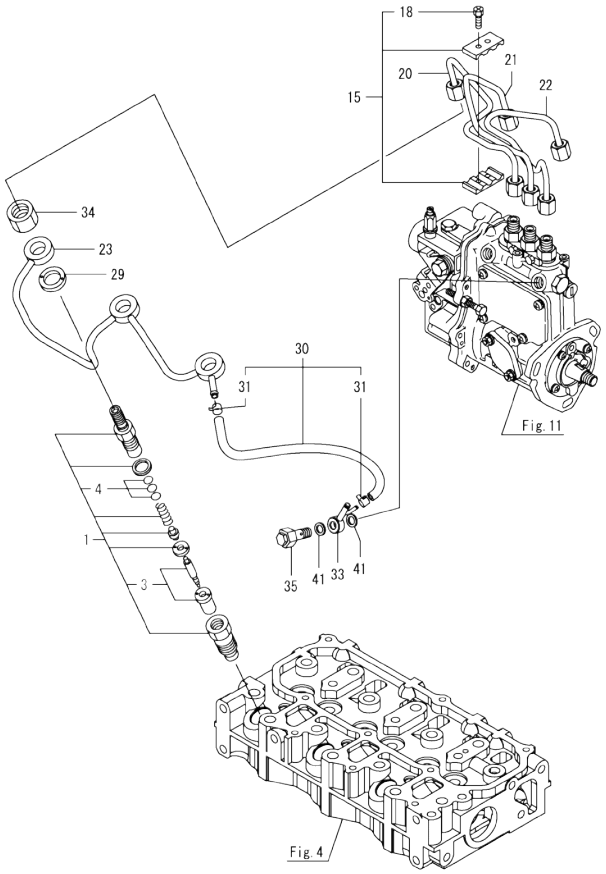


| No. | Lev. | Parts No. | Description | Q'ty (A) | (B) | (C) | (D) | (E) | (F) | I | R |
|---|---|---|---|---|---|---|---|---|---|---|---|
| 1 | 1 | 119515-53001 | VALVE ASSY,INJECTION | 3 | | | | | | | |
| 3 | 2 | 119515-53010 | NOZZLE ASSY | 3 | | | | | | | |
| 4 | 2 | 129901-53800 | SHIM SET | 3 | | | | | | | |
| 15 | 1 | 129150-59120 | RETAINER | 1 | | | | | | | |
| 18 | 2 | 129150-59131 | BOLT | 2 | | | | | | | |
| 20 | 1 | 119546-59810 | PIPE ASSY, INJECTION | 1 | | | | | | | |
| 21 | 1 | 119546-59820 | PIPE ASSY, INJECTION | 1 | | | | | | | |
| 22 | 1 | 119546-59830 | PIPE ASSY, INJECTION | 1 | | | | | | | |
| 23 | 1 | 119515-59540 | PIPE ASSY | 1 | | | | | | | |
| 29 | 1 | 129901-59560 | GASKET | 3 | | | | | | | |
| 30 | 1 | 119540-59570 | PIPE ASSY | 1 | | | | | | | |
| 31 | 2 | 124066-59100 | CLIP | 2 | | | | | | | |
| 33 | 1 | 119840-59570 | JOINT | 1 | | | | | | | |
| 34 | 1 | 119620-59700 | NUT | 3 | | | | | | | |
| 35 | 1 | 119813-59950 | VALVE ASSY, CHECK | 1 | | | | | | | |
| 41 | 1 | 22190-120002 | WASHER, SEAL | 2 | | | | | | | |

N:Old $\frac{\text{Yes}}{\text{No}}$ New. Q:Old $\frac{\text{No}}{\text{Yes}}$ New. R:Old $\frac{\text{Yes}}{\text{Yes}}$ New. S:Old $\frac{\text{No}}{\text{No}}$ New. W:Add. Z:Discontinued. F:Interchangeable by set. K:Q'ty Change

Copyright (C) 2013 YANMAR GLOBAL CS CO., LTD. All RightsReserved.

# Fig.14. FUEL FILTER

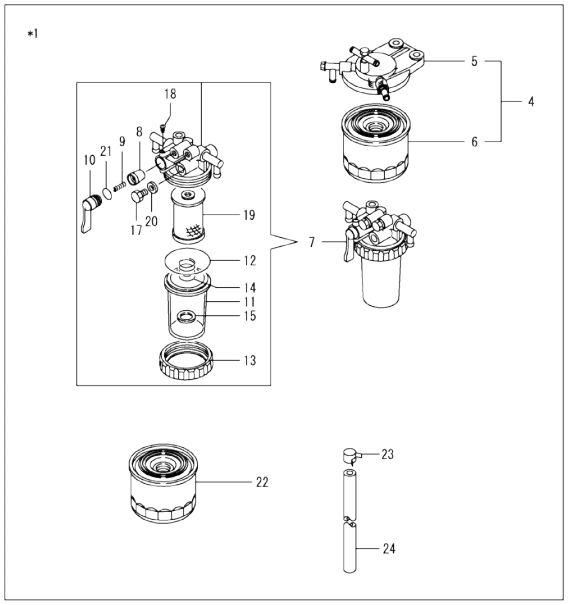


Remarks
*1.Accessory.



(A)=3TNV70-XPLW (D)=
(B)= (E)=
(C)= (F)=

| No. | Lev. | Parts No. | Description | Q'ty (A) | (B) | (C) | (D) | (E) | (F) | I | R |
|---|---|---|---|---|---|---|---|---|---|---|---|
| 1 | 1 | 103854-39140 | BOLT, PIPE JOINT | 1 | | | | | | | |
| 2 | 1 | 101304-59020 | JOINT | 1 | | | | | | | |
| 3 | 1 | 22190-120002 | WASHER, SEAL | 2 | | | | | | | |
| 4 | 1 | 129940-55601 | FILTER ASSY | 1 | | | | | | | |
| 5 | 2 | 129004-55612 | BRACKET | 1 | | | | | | | |
| 6 | 2 | 119802-55801 | FILTER | 1 | | | | | | | |
| 7 | 1 | 129335-55701 | SEPARATOR ASSY,WATER | 1 | | | | | | | |
| 8 | 2 | 104200-55321 | VALVE, TAPER | 1 | | | | | | | |
| 9 | 2 | 104200-55330 | SPRING | 1 | | | | | | | |
| 10 | 2 | 104200-55341 | HANDLE | 1 | | | | | | | |
| 11 | 2 | 124064-55510 | COVER | 1 | | | | | | | |
| 12 | 2 | 102103-55520 | O-RING | 1 | | | | | | | |
| 13 | 2 | 110250-55610 | RING | 1 | | | | | | | |
| 14 | 2 | 121257-55720 | SPRING | 1 | | | | | | | |
| 15 | 2 | 121257-55731 | FLOAT | 1 | | | | | | | |
| 17 | 2 | 101720-55750 | PLUG | 2 | | | | | | | |
| 18 | 2 | 104200-55750 | SCREW | 1 | | | | | | | |
| 19 | 2 | 171081-55910 | SCREEN | 1 | | | | | | | |
| 20 | 2 | 23418-060000 | GASKET | 2 | | | | | | | |
| 21 | 2 | 24311-240100 | O-RING | 1 | | | | | | | |
| 22 | 1 | 119802-55801 | FILTER | 1 | | | | | | | |
| 23 | 1 | 124766-59050 | CLIP | 4 | | | | | | | |
| 24 | 1 | 105225-59520 | PIPE | 1 | | | | | | | |

N:Old ←Yes/No→ New. Q:Old ←No/Yes→ New, R:Old ←Yes/Yes→ New. S:Old ←No/No→ New. W:Add. Z:Discontinued. F:Interchangeable by set. K:Q'ty Change

Copyright (C) 2013 YANMAR GLOBAL CS CO., LTD. All RightsReserved.

# Fig.15. STARTING MOTOR

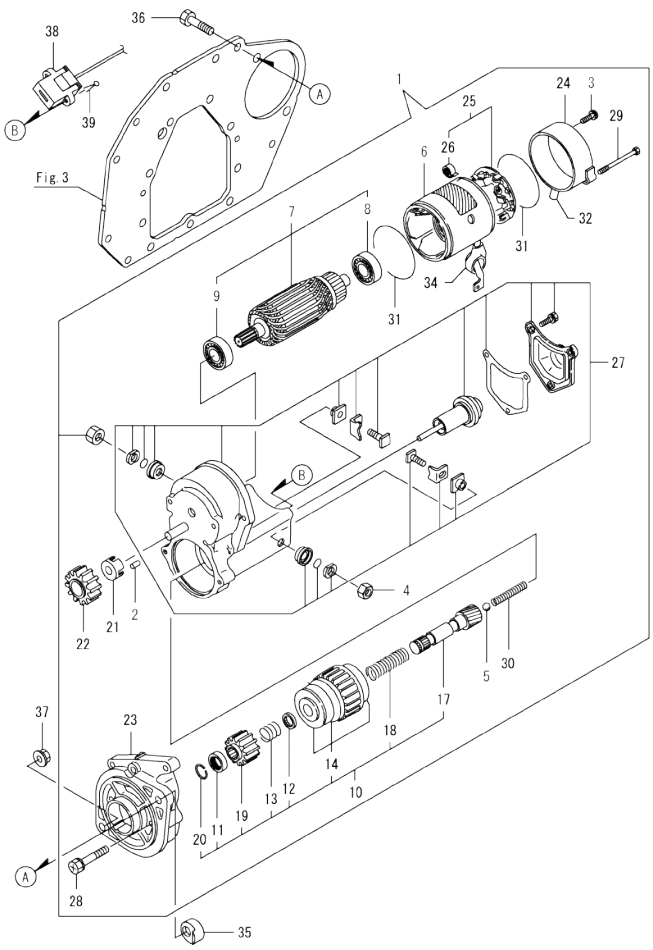




(A)=3TNV70-XPLW (D)=
(B)= (E)=
(C)= (F)=

| No. | Lev. | Parts No. | Description | Q'ty (A) | (B) | (C) | (D) | (E) | (F) | I | R |
|---|---|---|---|---|---|---|---|---|---|---|---|
| 1 | 1 | 129129-77010 | STARTER ASSY | 1 | | | | | | | |
| 2 | 2 | X0283060061 | ROLLER | 5 | | | | | | | |
| 3 | 2 | 129129-77460 | SCREW | 2 | | | | | | | |
| 4 | 2 | X9490561370 | NUT | 1 | | | | | | | |
| 5 | 2 | X9491200240 | BALL | 1 | | | | | | | |
| 6 | 2 | 129129-77210 | YOKE ASSY | 1 | | | | | | | |
| 7 | 2 | 129129-77220 | ARMATURE ASSY | 1 | | | | | | | |
| 8 | 3 | 129129-77230 | BEARING, BALL | 1 | | | | | | | |
| 9 | 3 | 129129-77240 | BEARING, BALL | 1 | | | | | | | |
| 10 | 2 | 129129-77250 | STARTER | 1 | | | | | | | |
| 11 | 3 | X0280210230 | NUT | 1 | | | | | | | |
| 12 | 3 | X0283270140 | RETAINER | 1 | | | | | | | |
| 13 | 3 | X9491703371 | SPRING, COIL | 1 | | | | | | | |
| 14 | 3 | 129129-77390 | CLUTCH ASSY | 1 | | | | | | | |
| 17 | 3 | 129129-77400 | SHAFT | 1 | | | | | | | |
| 18 | 3 | 129129-77410 | SPRING, COIL | 1 | | | | | | | |
| 19 | 3 | 129129-77420 | PINION, STARTER | 1 | | | | | | | |
| 20 | 3 | 129129-77430 | RING | 1 | | | | | | | |
| 21 | 2 | 129129-77260 | RETAINER | 1 | | | | | | | |
| 22 | 2 | 129129-77270 | PINION | 1 | | | | | | | |
| 23 | 2 | 129129-77280 | HOUSING | 1 | | | | | | | |
| 24 | 2 | 129129-77290 | FRAME | 1 | | | | | | | |
| 25 | 2 | 129129-77300 | HOLDER ASSY | 1 | | | | | | | |
| 26 | 3 | X9491730461 | SPRING | 4 | | | | | | | |
| 27 | 2 | 129129-77310 | SWITCH ASSY | 1 | | | | | | | |
| 28 | 2 | 129129-77320 | BOLT | 2 | | | | | | | |
| 29 | 2 | 129129-77330 | BOLT | 2 | | | | | | | |
| 30 | 2 | 129129-77340 | SPRING | 1 | | | | | | | |
| 31 | 2 | 129129-77350 | O-RING | 2 | | | | | | | |
| 32 | 2 | 129129-77362 | COVER | 1 | | | | | | | |
| 34 | 2 | 129129-77380 | CAP | 1 | | | | | | | |
| 35 | 1 | 119285-77050 | NUT | 1 | | | | | | | |
| 36 | 1 | 26156-120302 | BOLT | 2 | | | | | | | |
| 37 | 1 | 26736-120002 | NUT | 1 | | | | | | | |
| 38 | 1 | 119643-77900 | CONNECTOR | 1 | | | | | | | |
| 39 | 1 | 22411-200250 | COTTER PIN 2.0X25 | 1 | | | | | | | |

N:Old ◄Yes/No► New. Q:Old ◄No/Yes► New. R:Old ◄Yes/Yes► New. S:Old ◄No/No► New. W:Add. Z:Discontinued. F:Interchangeable by set. K:Q'ty Change

Copyright (C) 2013 YANMAR GLOBAL CS CO., LTD. All RightsReserved.

# Fig.16. GENERATOR



(A)=3TNV70-XPLW
(B)=
(C)=
(D)=
(E)=
(F)=

| No. | Lev. | Parts No. | Description | Q'ty (A) | (B) | (C) | (D) | (E) | (F) | I | R |
|---|---|---|---|---|---|---|---|---|---|---|---|
| 1 | 1 | 119626-77210 | ALTERNATOR (12V-55A) | 1 | | | | | | | |
| 2 | 2 | X9490561001 | NUT | 1 | | | | | | | |
| 3 | 2 | 129052-77380 | ROTOR ASSY | 1 | | | | | | | |
| 4 | 3 | 123501-79240 | BEARING, BALL | 1 | | | | | | | |
| 5 | 3 | 119620-79250 | COVER | 1 | | | | | | | |
| 6 | 2 | 129052-77422 | FRAME ASSY | 1 | | | | | | | |
| 7 | 3 | 119620-79200 | BEARING, BALL | 1 | | | | | | | |
| 8 | 3 | 119620-79210 | PLATE, RETAINER | 1 | | | | | | | |
| 9 | 3 | 119620-79220 | SCREW | 4 | | | | | | | |
| 10 | 3 | 119620-79230 | STUD | 2 | | | | | | | |
| 11 | 2 | 128401-77440 | FRAME | 1 | | | | | | | |
| 12 | 2 | 119626-77450 | COVER | 1 | | | | | | | |
| 13 | 2 | 119620-77461 | PULLEY | 1 | | | | | | | |
| 14 | 2 | 119620-77471 | NUT | 1 | | | | | | | |
| 15 | 2 | 119620-77490 | COLLAR | 1 | | | | | | | |
| 16 | 2 | 129423-77710 | REGULATOR ASSY | 1 | | | | | | | |
| 17 | 2 | 129052-79260 | HOLDER | 1 | | | | | | | |
| 18 | 2 | 129052-79270 | HOLDER | 1 | | | | | | | |
| 19 | 2 | 119620-79290 | SCREW | 6 | | | | | | | |
| 20 | 2 | 119620-79300 | SCREW | 1 | | | | | | | |
| 21 | 2 | 119620-79310 | BOLT | 3 | | | | | | | |
| 22 | 2 | 119620-79320 | SCREW | 2 | | | | | | | |
| 23 | 2 | 119620-79330 | BOLT | 2 | | | | | | | |
| 24 | 2 | 119620-79340 | BUSH, INSULATION | 1 | | | | | | | |
| 25 | 2 | 119620-79350 | NUT | 2 | | | | | | | |
| 26 | 1 | 26106-100452 | BOLT | 1 | | | | | | | |
| 27 | 1 | 119940-77270 | SPACER | 1 | | | | | | | |
| 28 | 1 | 119717-77340 | ADJUSTER | 1 | | | | | | | |
| 29 | 1 | 129972-77341 | BOLT | 1 | | | | | | | |
| 30 | 1 | 26106-080202 | BOLT | 1 | | | | | | | |

N:Old ←Yes/No→ New. Q:Old ←No/Yes→ New. R:Old ←Yes/Yes→ New. S:Old ←No/No→ New. W:Add. Z:Discontinued. F:Interchangeable by set. K:Q'ty Change

Copyright (C) 2013 YANMAR GLOBAL CS CO., LTD. All RightsReserved.

# Fig.17. ELECTRIC PARTS

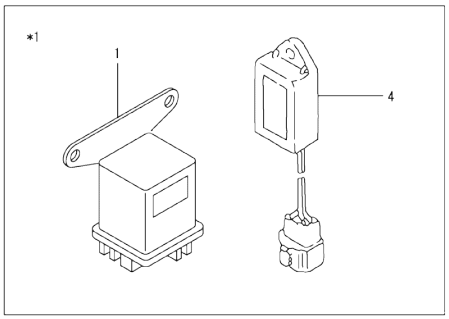


Remarks
*1.Accessory.



(A)=3TNV70-XPLW (D)=
(B)= (E)=
(C)= (F)=

| No. | Lev. | Parts No. | Description | Q'ty (A) | (B) | (C) | (D) | (E) | (F) | I | R |
|---|---|---|---|---|---|---|---|---|---|---|---|
| 1 | 1 | 119650-77911 | RELAY ASSY, GLOW | 1 | | | | | | | |
| 4 | 1 | 129211-77920 | TIMER | 1 | | | | | | | |

N:Old ◄Yes/No► New. Q:Old ◄No/Yes► New, R:Old ◄Yes/Yes► New. S:Old ◄No/No► New. W:Add. Z:Discontinued. F:Interchangeable by set. K:Q`ty Change

Copyright (C) 2013 YANMAR GLOBAL CS CO., LTD. All RightsReserved.

# Fig.18. GASKET SET



(A)=3TNV70-XPLW
(B)=
(C)=
(D)=
(E)=
(F)=

| No. | Lev. | Parts No. | Description | Q'ty (A) | (B) | (C) | (D) | (E) | (F) | I | R |
|---|---|---|---|---|---|---|---|---|---|---|---|
| 1 | 1 | 119515-92600 | PACKING | 1 | | | | | | | 1 |
| 2 | 2 | 119515-01331 | GASKET, HEAD | 1 | | | | | | | |
| 3 | 2 | 121850-51960 | O-RING | 1 | | | | | | | |
| 4 | 2 | 119717-11340 | SEAL, VALVE STEM | 3 | | | | | | | |
| 5 | 2 | 129901-11450 | PROTECTOR, NOZZLE | 3 | | | | | | | |
| 6 | 2 | 119515-11310 | GASKET, BONNET | 1 | | | | | | | |
| 7 | 2 | 119717-13110 | GASKET | 1 | | | | | | | |
| 8 | 2 | 119515-13200 | GASKET, SILENCER | 1 | | | | | | | |
| 9 | 2 | 119717-11350 | SEAL, VALVE STEM | 3 | | | | | | | |
| 10 | 2 | 22190-080002 | WASHER, SEAL 6 | 4 | | | | | | | |
| 11 | 2 | 24311-000320 | O-RING, 1AP32.0 | 2 | | | | | | | |
| 12 | 2 | 119717-32060 | O-RING, P15.0 | 1 | | | | | | | |
| 13 | 2 | 119624-32040 | O-RING, P12.0 | 1 | | | | | | | |
| 14 | 2 | 119717-32050 | O-RING, P17.0 | 3 | | | | | | | |
| 15 | 2 | 119600-11460 | GASKET, NOZZLE | 6 | | | | | | | |
| 16 | 2 | 119515-11330 | GASKET | 1 | | | | | | | |
| 17 | 2 | 22190-220002 | WASHER, SEAL 22 | 1 | | | | | | | |
| 18 | 2 | 22190-120002 | WASHER, SEAL 12 | 4 | | | | | | | |
| 19 | 2 | 129901-59560 | GASKET | 3 | | | | | | | |
| 20 | 2 | 119515-42020 | GASKET, WATER PUMP | 1 | | | | | | | |
| 21 | 2 | 23414-080000 | GASKET, 8X1.0 | 1 | | | | | | | |
| 22 | 2 | 124465-44950 | GASKET, 16 | 2 | | | | | | | |
| 23 | 2 | 24341-000240 | O-RING, 1AS24.0 | 1 | | | | | | | |
| 24 | 2 | 24341-000400 | O-RING, 1AS40.0 | 1 | | | | | | | |
| 25 | 1 | 129400-92410 | HONE | 1 | | | | | | | 1 |
| 26 | 1 | 977770-1207F | GASKET.LIQUID | 1 | | | | | | | 1 |

Remarks
(1)Optional parts.

N:Old ◄Yes/No► New. Q:Old ◄No/Yes► New, R:Old ◄Yes/Yes► New, S:Old ◄No/No► New. W:Add. Z:Discontinued. F:Interchangeable by set. K:Q'ty Change

Copyright (C) 2013 YANMAR GLOBAL CS CO., LTD. All RightsReserved.

# Parts No. Index

| Parts No. | Fig. No. | Ref. No. |
|---|---|---|
| 101304-59020 | 14 | 2 |
| 101720-55750 | 14 | 17 |
| 102103-55520 | 14 | 12 |
| 103854-39140 | 14 | 1 |
| 104200-55321 | 14 | 8 |
| 104200-55330 | 14 | 9 |
| 104200-55341 | 14 | 10 |
| 104200-55750 | 14 | 18 |
| 105010-11490 | 4 | 6 |
| 105027-12570 | 5 | 6 |
| 105225-59520 | 14 | 24 |
| 105311-01090 | 1 | 5 |
| 110250-55610 | 14 | 13 |
| 114250-39450 | 9 | 12 |
| 119025-51520 | 11 | 78 |
| 119125-51370 | 11 | 61 |
| 119125-51900 | 11 | 100 |
| 119131-18320 | 6 | 5 |
| 119226-07900 | 4 | 1 |
| 119233-12700 | 5 | 9 |
| | | 12 |
| 119233-77932 | 12 | 121 |
| 119285-01580 | 3 | 5 |
| 119285-01990 | 1 | 7 |
| 119285-11990 | 4 | 13 |
| 119285-77050 | 15 | 35 |
| 119385-21580 | 8 | 12 |
| 119415-61401 | 12 | 18 |
| 119515-01200 | 1 | 30 |
| 119515-01331 | 1 | 31 |
| | 18 | 2 |
| 119515-01740 | 3 | 11 |
| 119515-11101 | 4 | 15 |
| 119515-11110 | 4 | 16 |
| 119515-11200 | 4 | 24 |
| 119515-11240 | 4 | 25 |
| 119515-11280 | 4 | 29 |
| 119515-11310 | 4 | 45 |
| | 18 | 6 |
| 119515-11320 | 4 | 46 |
| 119515-11330 | 4 | 47 |
| | 18 | 16 |
| 119515-11740 | 4 | 7 |
| 119515-11800 | 4 | 22 |
| 119515-13200 | 6 | 7 |
| | 18 | 8 |
| 119515-14400 | 7 | 2 |
| 119515-14581 | 7 | 3 |
| 119515-21650 | 8 | 8 |
| 119515-21700 | 8 | 1 |

| Parts No. | Fig. No. | Ref. No. |
|---|---|---|
| 119515-22300 | 8 | 22 |
| 119515-22500 | 8 | 18 |
| 119515-22550 | 8 | 36 |
| 119515-23000 | 8 | 24 |
| 119515-23601 | 8 | 29 |
| 119515-23611 | 8 | 32 |
| 119515-34801 | 9 | 1 |
| 119515-35080 | 9 | 7 |
| 119515-42002 | 10 | 1 |
| 119515-42020 | 10 | 12 |
| | 18 | 20 |
| 119515-42041 | 10 | 4 |
| 119515-51100 | 11 | 10 |
| 119515-53001 | 13 | 1 |
| 119515-53010 | 13 | 3 |
| 119515-59540 | 13 | 23 |
| 119515-61300 | 12 | 9 |
| 119515-61440 | 12 | 25 |
| 119515-92600 | 18 | 1 |
| 119516-11380 | 4 | 38 |
| 119516-22020 | 8 | 16 |
| 119516-22030 | 8 | 34 |
| 119516-61500 | 12 | 34 |
| 119516-61700 | 12 | 110 |
| 119540-59570 | 13 | 30 |
| 119546-59810 | 13 | 20 |
| 119546-59820 | 13 | 21 |
| 119546-59830 | 13 | 22 |
| 119600-11460 | 4 | 5 |
| | 18 | 15 |
| 119620-01620 | 3 | 6 |
| 119620-02020 | 1 | 8 |
| 119620-14200 | 7 | 1 |
| 119620-21500 | 8 | 11 |
| 119620-21941 | 8 | 10 |
| 119620-49290 | 10 | 22 |
| 119620-59700 | 13 | 34 |
| 119620-77461 | 16 | 13 |
| 119620-77471 | 16 | 14 |
| 119620-77490 | 16 | 15 |
| 119620-79200 | 16 | 7 |
| 119620-79210 | 16 | 8 |
| 119620-79220 | 16 | 9 |
| 119620-79230 | 16 | 10 |
| 119620-79250 | 16 | 5 |
| 119620-79290 | 16 | 19 |
| 119620-79300 | 16 | 20 |
| 119620-79310 | 16 | 21 |
| 119620-79320 | 16 | 22 |
| 119620-79330 | 16 | 23 |

| Parts No. | Fig. No. | Ref. No. |
|---|---|---|
| 119620-79340 | 16 | 24 |
| 119620-79350 | 16 | 25 |
| 119621-21681 | 8 | 9 |
| 119623-01250 | 1 | 6 |
| 119624-32040 | 2 | 20 |
| | 18 | 13 |
| 119626-12502 | 5 | 2 |
| 119626-12800 | 5 | 10 |
| 119626-77210 | 16 | 1 |
| 119626-77450 | 16 | 12 |
| 119632-12211 | 5 | 1 |
| 119640-01640 | 3 | 14 |
| 119643-77900 | 15 | 38 |
| 119645-49020 | 10 | 30 |
| 119650-77911 | 17 | 1 |
| 119655-12560 | 5 | 5 |
| | | 11 |
| 119660-01911 | 2 | 19 |
| 119660-35150 | 9 | 4 |
| | | 18 |
| 119660-61901 | 12 | 69 |
| 119717-01501 | 2 | 1 |
| 119717-01570 | 2 | 3 |
| 119717-01750 | 2 | 18 |
| 119717-01800 | 2 | 8 |
| 119717-02411 | 1 | 11 |
| 119717-02930 | 1 | 24 |
| 119717-03031 | 4 | 39 |
| 119717-03070 | 4 | 40 |
| | | 41 |
| 119717-11131 | 4 | 17 |
| 119717-11190 | 4 | 19 |
| 119717-11260 | 4 | 28 |
| 119717-11340 | 4 | 20 |
| | 18 | 4 |
| 119717-11350 | 4 | 21 |
| | 18 | 9 |
| 119717-11650 | 4 | 30 |
| 119717-13110 | 6 | 2 |
| | 18 | 7 |
| 119717-13600 | 6 | 3 |
| 119717-21200 | 8 | 5 |
| 119717-23200 | 8 | 28 |
| 119717-23910 | 8 | 31 |
| 119717-25050 | 7 | 10 |
| 119717-25101 | 7 | 11 |
| 119717-25911 | 7 | 14 |
| 119717-25930 | 7 | 17 |
| 119717-32050 | 2 | 21 |
| | 18 | 14 |

| Parts No. | Fig. No. | Ref. No. |
|---|---|---|
| 119717-32060 | 9 | 6 |
| | 18 | 12 |
| 119717-32080 | 2 | 11 |
| 119717-32100 | 2 | 10 |
| 119717-32110 | 2 | 15 |
| 119717-32120 | 2 | 16 |
| 119717-35140 | 9 | 3 |
| 119717-39210 | 9 | 13 |
| 119717-42031 | 10 | 3 |
| 119717-42350 | 10 | 16 |
| 119717-49800 | 10 | 19 |
| 119717-51030 | 11 | 6 |
| 119717-51060 | 11 | 7 |
| 119717-51070 | 11 | 8 |
| 119717-51150 | 11 | 14 |
| 119717-51190 | 11 | 16 |
| 119717-51200 | 11 | 17 |
| 119717-51300 | 11 | 56 |
| 119717-51330 | 11 | 59 |
| 119717-51420 | 11 | 64 |
| 119717-51481 | 11 | 104 |
| 119717-51491 | 11 | 105 |
| 119717-51500 | 11 | 77 |
| 119717-51570 | 11 | 83 |
| 119717-51711 | 11 | 89 |
| 119717-51750 | 11 | 90 |
| 119717-51761 | 11 | 91 |
| 119717-51860 | 11 | 103 |
| 119717-51930 | 12 | 82 |
| 119717-61050 | 12 | 2 |
| 119717-61060 | 12 | 3 |
| 119717-61070 | 12 | 4 |
| 119717-61120 | 12 | 12 |
| 119717-61130 | 12 | 13 |
| 119717-61140 | 12 | 14 |
| 119717-61150 | 12 | 15 |
| 119717-61201 | 12 | 5 |
| 119717-77340 | 16 | 28 |
| 119717-77852 | 4 | 56 |
| 119718-01600 | 3 | 2 |
| 119718-01640 | 3 | 7 |
| 119718-13100 | 6 | 1 |
| 119718-77801 | 4 | 55 |
| 119734-01580 | 2 | 4 |
| 119734-02220 | 3 | 9 |
| 119740-61550 | 12 | 88 |
| 119744-01521 | 2 | 6 |
| 119802-13620 | 6 | 4 |
| 119802-32130 | 2 | 17 |
| 119802-55801 | 14 | 6 |

# Parts No. Index

| Parts No. | Fig. No. | Ref. No. |
|---|---|---|
| 119802-55801 | 14 | 22 |
| 119808-12540 | 5 | 4 |
| 119810-01770 | 3 | 13 |
| 119810-02941 | 1 | 32 |
| 119813-59950 | 13 | 35 |
| 119840-59570 | 13 | 33 |
| 119940-77270 | 16 | 27 |
| 119C10-42320 | 10 | 9 |
| 121023-01551 | 2 | 32 |
| 121250-44901 | 10 | 27 |
| 121257-55720 | 14 | 14 |
| 121257-55731 | 14 | 15 |
| 121450-42450 | 10 | 26 |
| 121520-34810 | 9 | 2 |
| 121575-66830 | 12 | 26 |
| 121850-51960 | 2 | 22 |
| | 18 | 3 |
| 122710-51090 | 11 | 9 |
| 123501-79240 | 16 | 4 |
| 124060-01050 | 1 | 12 |
| 124060-21600 | 8 | 15 |
| 124064-55510 | 14 | 11 |
| 124066-59100 | 13 | 31 |
| 124101-49531 | 10 | 18 |
| 124160-01751 | 2 | 30 |
| | 4 | 37 |
| 124160-01910 | 1 | 13 |
| 124450-35110 | 9 | 5 |
| | | 19 |
| 124465-44950 | 10 | 28 |
| | | 29 |
| | 18 | 22 |
| 124550-51350 | 11 | 60 |
| 124766-59050 | 14 | 23 |
| 126650-12680 | 5 | 8 |
| 128401-77440 | 16 | 11 |
| 129001-32320 | 2 | 13 |
| 129001-32330 | 2 | 14 |
| 129004-55612 | 14 | 5 |
| 129005-59830 | 9 | 14 |
| 129006-03120 | 4 | 42 |
| 129008-61301 | 12 | 74 |
| 129052-61390 | 12 | 17 |
| 129052-77380 | 16 | 3 |
| 129052-77422 | 16 | 6 |
| 129052-79260 | 16 | 17 |
| 129052-79270 | 16 | 18 |
| 129100-01580 | 3 | 1 |
| | 8 | 2 |
| 129100-51560 | 11 | 82 |

| Parts No. | Fig. No. | Ref. No. |
|---|---|---|
| 129100-51570 | 11 | 84 |
| 129100-52200 | 11 | 109 |
| 129129-77010 | 15 | 1 |
| 129129-77210 | 15 | 6 |
| 129129-77220 | 15 | 7 |
| 129129-77230 | 15 | 8 |
| 129129-77240 | 15 | 9 |
| 129129-77250 | 15 | 10 |
| 129129-77260 | 15 | 21 |
| 129129-77270 | 15 | 22 |
| 129129-77280 | 15 | 23 |
| 129129-77290 | 15 | 24 |
| 129129-77300 | 15 | 25 |
| 129129-77310 | 15 | 27 |
| 129129-77320 | 15 | 28 |
| 129129-77330 | 15 | 29 |
| 129129-77340 | 15 | 30 |
| 129129-77350 | 15 | 31 |
| 129129-77362 | 15 | 32 |
| 129129-77380 | 15 | 34 |
| 129129-77390 | 15 | 14 |
| 129129-77400 | 15 | 17 |
| 129129-77410 | 15 | 18 |
| 129129-77420 | 15 | 19 |
| 129129-77430 | 15 | 20 |
| 129129-77460 | 15 | 3 |
| 129150-11230 | 4 | 31 |
| 129150-11750 | 4 | 33 |
| 129150-25301 | 7 | 16 |
| 129150-59120 | 13 | 15 |
| 129150-59131 | 13 | 18 |
| 129155-51020 | 11 | 5 |
| 129155-51140 | 11 | 13 |
| 129155-51280 | 11 | 54 |
| | | 55 |
| | 12 | 10 |
| 129155-51400 | 11 | 62 |
| 129155-51450 | 11 | 72 |
| 129155-51530 | 11 | 79 |
| 129155-51540 | 11 | 80 |
| 129155-51550 | 11 | 81 |
| 129155-51580 | 11 | 86 |
| 129155-51591 | 11 | 87 |
| 129155-51600 | 11 | 21 |
| 129155-51701 | 11 | 88 |
| 129155-52051 | 11 | 108 |
| 129155-61341 | 12 | 75 |
| 129155-61480 | 12 | 28 |
| 129156-61460 | 12 | 27 |
| 129209-61370 | 12 | 16 |

| Parts No. | Fig. No. | Ref. No. |
|---|---|---|
| 129209-61920 | 12 | 78 |
| 129209-61930 | 12 | 119 |
| 129209-61970 | 12 | 120 |
| 129211-77920 | 17 | 4 |
| 129335-55701 | 14 | 7 |
| 129400-92410 | 18 | 25 |
| 129423-77710 | 16 | 16 |
| 129486-07901 | 4 | 2 |
| 129486-61540 | 12 | 53 |
| 129486-61650 | 12 | 63 |
| 129508-11180 | 4 | 18 |
| 129612-12650 | 5 | 7 |
| 129900-32130 | 2 | 12 |
| 129901-11450 | 4 | 4 |
| | 18 | 5 |
| 129901-53800 | 13 | 4 |
| 129901-59560 | 13 | 29 |
| | 18 | 19 |
| 129940-55601 | 14 | 4 |
| 129972-77341 | 16 | 29 |
| 158552-61700 | 12 | 64 |
| 158552-61710 | 12 | 68 |
| 158552-61900 | 12 | 77 |
| 158600-51170 | 11 | 15 |
| 158600-51270 | 11 | 53 |
| 158600-51410 | 11 | 63 |
| 158600-51420 | 11 | 65 |
| 158600-51442 | 11 | 66 |
| 158600-51570 | 11 | 85 |
| 158600-51790 | 11 | 92 |
| 158601-61710 | 12 | 111 |
| 171081-55910 | 14 | 19 |
| 171353-61460 | 12 | 76 |
| 174307-51700 | 12 | 35 |
| 22190-080002 | 9 | 15 |
| | | 17 |
| | 18 | 10 |
| 22190-100002 | 12 | 79 |
| 22190-120002 | 12 | 80 |
| | 13 | 41 |
| | 14 | 3 |
| | 18 | 18 |
| 22190-160002 | 11 | 93 |
| 22190-220002 | 3 | 16 |
| | 18 | 17 |
| 22217-120000 | 11 | 94 |
| 22242-000120 | 4 | 34 |
| 22252-000220 | 8 | 23 |
| 22272-000030 | 12 | 70 |
| 22351-050010 | 11 | 95 |

| Parts No. | Fig. No. | Ref. No. |
|---|---|---|
| 22351-060012 | 4 | 23 |
| 22372-040000 | 12 | 81 |
| 22411-200250 | 15 | 39 |
| 22512-040120 | 8 | 6 |
| 22857-500100 | 4 | 48 |
| | | 49 |
| 22857-500160 | 4 | 50 |
| 23414-080000 | 10 | 13 |
| | 18 | 21 |
| 23414-120016 | 12 | 122 |
| 23418-060000 | 14 | 20 |
| 23857-030000 | 9 | 16 |
| 23876-005000 | 4 | 14 |
| 23876-030000 | 2 | 9 |
| 24101-060034 | 11 | 96 |
| 24101-063034 | 11 | 97 |
| 24311-000320 | 2 | 31 |
| | 4 | 52 |
| | 18 | 11 |
| 24311-240100 | 14 | 21 |
| 24316-000150 | 11 | 98 |
| 24341-000070 | 12 | 71 |
| 24341-000240 | 2 | 33 |
| | 18 | 23 |
| 24341-000400 | 4 | 51 |
| | 18 | 24 |
| 26022-050122 | 11 | 99 |
| 26106-050102 | 11 | 101 |
| 26106-060102 | 9 | 11 |
| | 12 | 72 |
| | | 83 |
| 26106-060122 | 2 | 23 |
| | 7 | 9 |
| | 10 | 17 |
| 26106-060142 | 12 | 84 |
| 26106-060162 | 2 | 24 |
| | | 34 |
| 26106-060202 | 4 | 53 |
| | 12 | 85 |
| 26106-060222 | 3 | 10 |
| 26106-060352 | 7 | 15 |
| 26106-060402 | 2 | 25 |
| | | 26 |
| 26106-060452 | 3 | 17 |
| | 12 | 86 |
| 26106-060602 | 2 | 27 |
| 26106-060652 | 2 | 28 |
| 26106-060752 | 4 | 54 |
| 26106-080122 | 3 | 18 |
| | 10 | 14 |

# Parts No. Index


| Parts No. | Fig. No. | Ref. No. |
|---|---|---|
| 26106-080142 | 4 | 3 |
| 26106-080202 | 16 | 30 |
| 26106-080252 | 10 | 20 |
| 26106-080402 | 4 | 36 |
| 26106-080502 | 10 | 15 |
| 26106-080652 | 10 | 21 |
| 26106-100452 | 16 | 26 |
| 26156-120302 | 15 | 36 |
| 26206-100202 | 3 | 3 |
| 26206-100252 | 3 | 4 |
| 26306-080002 | 2 | 29 |
| | 6 | 6 |
| 26366-080002 | 12 | 73 |
| 26577-060122 | 10 | 10 |
| 26716-120002 | 11 | 102 |
| 26736-120002 | 15 | 37 |
| 26756-060002 | 12 | 87 |
| 26979-050162 | 4 | 35 |
| 27241-120000 | 1 | 14 |
| 27241-250000 | 10 | 11 |
| 719515-01561 | 1 | 1 |
| 719515-51390 | 11 | 1 |
| 719717-02901 | 1 | 27 |
| 719717-02911 | 1 | 35 |
| 719734-01510 | 2 | 5 |
| 977770-1207F | 18 | 26 |
| X0280210230 | 15 | 11 |
| X0283060061 | 15 | 2 |
| X0283270140 | 15 | 12 |
| X9490561001 | 16 | 2 |
| X9490561370 | 15 | 4 |
| X9491200240 | 15 | 5 |
| X9491703371 | 15 | 13 |
| X9491730461 | 15 | 26 |

| Parts No. | Fig. No. | Ref. No. |
|---|---|---|

| Parts No. | Fig. No. | Ref. No. |
|---|---|---|

| Parts No. | Fig. No. | Ref. No. |
|---|---|---|