YANMAR

PARTS CATALOG

0CW10-M57700EN

Last update Jul., 2010

PREFACE

1. This parts catalog is the 1st edition of 3TNV76-DVA for VALPADANA.

Pub.No. : 0CW10-G57700
Published : November, 2009

2. Model name

Engine model	Vehicle	Vehicle made by
3TNV76-DVA	TRACTOR	VALPADANA

Directions for the Parts Catalog.

1.The parts stipulated in this Parts Catalog are not necessarily standard equipped parts.
2.Parts may change without prior notice.
3.The following is an example of the Parts Catalog format.

0CF10-G21601 29. FUEL INJECTION PUMP(W/BOOST)

(A)=4JH-DT
(B)=4JH-DTZ
(C)=4JH-DTZP
(D)=4JH-DTZA
(E)=4JH-DTZY
(F)=

① REF.	② LEV.	PARTS NO.	DESCRIPTION	Q'TY (A)	(B)	(C)	(D)	(E)	(F)	③ I	⑤ R
1	1	729595-51390	FUEL INJECTION PUMP	1	1	1	1	1			1
1-1	1	729595-51391	FUEL INJECTION PUMP	1	1	1	1	1		N	1
	(A=E00185)	(B=E00200)									
3	2	26022-060162	SCREW M 6X 16	9	9	9	9	9			
3-1 ④	2	26022-060162	SCREW M 6X 16	4	4	4	4	4		K	
	(A=E00156)	(B=E00156)	(C=E00156) (D=E00156)	(E=E00156)							
4	2	129470-51040	CAMSHAFT	1	1	1	1	1			
5	2	122710-51050	BEARING, ROLLER	2	2	2	2	2			
6	2	129470-51060	RETAINER	1	1	1	1	1			

Remarks
(1) BOOST COMPEMSATOR TYPE. OPTIONAL
PART, TO E00155,(4JH-DT, 4JH-DTZ

① Ref. No.

The Ref. No. listed may not be in accordance with the illustration Ref. No.

(Ex.) Illustration No. 1 — List Ref No. 1 (Before change) → 1- 1 (After change)

For interchangeable symbols N, R and K, illustrations for new parts may be abbreviated.

② Lev. (Level)

Level indication
The numbers below indicate the level of relativity towards the main part.
1 ----- Main parts (Assembly parts)
2 ----- Sub component included in " 1 ".
3 ----- Sub component included in " 2 ".
Note) Parts that are not for sale are partially illustrated but not listed.

③ Interchangeability Mark

When a part change takes place, one of the following interchangeability symbols is indicated beside the part.

Symbol	Interchangeability	Contents note
N	Old ←Yes / No→ New	New Part is interchangeable for Old Part but Old Part is not interchangeable for New Part.
Q	Old ←No / Yes→ New	New Part is not interchangeable for Old Part but Old Part is interchangeable for New Part.
R	Old ←Yes / Yes→ New	New/ Old Parts are both interchangeable.
S	Old ←No / No→ New	New/ Old Parts are both not interchangeable.
W		Part discontinued.
Z		Part newly added.
F		Not interchangeable by a single part but interchangeable together with related parts.
K		Changes only for used parts quantities.

④ Effective Machine No.

When a part changes, the effective Machine No. will be indicated in the (A)-(F) column.

Product Symbol	Product No.	Product Symbol	Product No.
C	Clutch No. Compressor No.	F	Machine No. (Agricultural Equip.)
D	Drive No.	M	Machine No.
E	Engine No.	Note 1)	Date

Note 1) A date may follow the symbol. (Ex.) 1996.01
Note 2) " XXX " are for parts that could not be predicted or for engine models that could not be identified.
Note 3) (A=E00185) is the E (Engine Serial Number) for the column (A) model (in this case 4JH-DT) after the parts design change.

⑤ Remarks Mark

Figures or alphabets (symbols) are entered in the remarks column.
The comments (remarks) on parts that are indicated at the bottom of the illustration are the same symbols as those stated above.

Contents

0CW10-M57700

Fig. No.	Fig. Name
3TNV76-DVA	
1.	BLOCK, CYLINDER
2.	GEAR HOUSING
3.	OIL SUMP
4.	CYLINDER HEAD & BONNET
5.	EXHAUST MANIFOLD
6.	CAMSHAFT & DRIVING GEAR
7.	CRANKSHAFT & PISTON
8.	LUB.OIL SYSTEM
9.	COOLING WATER SYSTEM
10.	FUEL INJECTION PUMP
11.	GOVERNOR
12.	FUEL INJECTION VALVE
13.	FUEL LINE
14.	STARTING MOTOR
15.	GENERATOR
16.	GASKET SET

Fig.1. BLOCK, CYLINDER

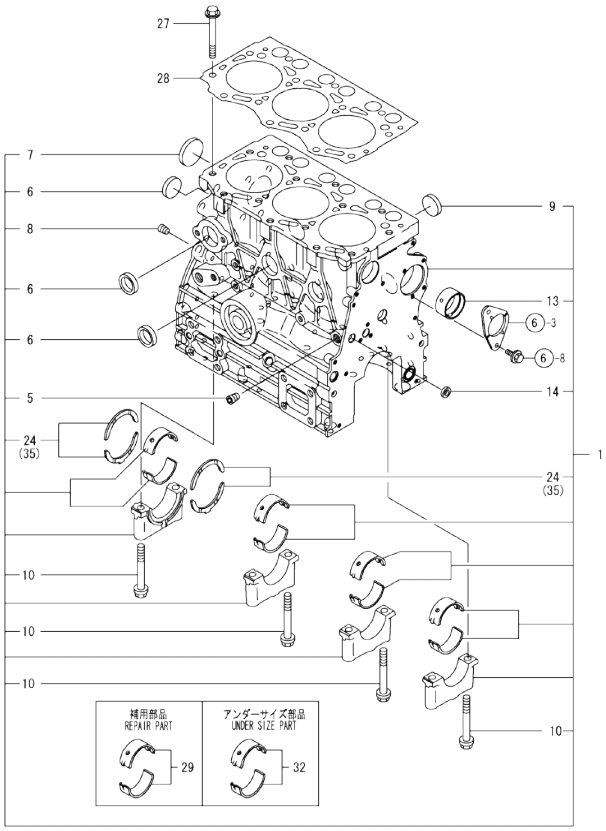

Remarks
(1) Repair part.
(2) Under-sized(U.S=0.25)part.
(3) Over-sized(O.S=0.25)part.

(A)=3TNV76-DVA (D)=
(B)= (E)=
(C)= (F)=

No.	Lev.	Parts No.	Description	Q'ty (A)	(B)	(C)	(D)	(E)	(F)	I	R
1	1	719717-01561	BLOCK ASSY, CYLINDER	1							
5	2	124060-01050	PLUG, PT1/8	1							
6	2	105311-01090	PLUG, 30	4							
7	2	119623-01250	PLUG, 45	1							
8	2	124160-01910	PLUG, PT1/4	1							
9	2	119285-01990	PLUG, 25	3							
10	2	119620-02020	BOLT, METAL CAP	8							
13	2	119717-02411	BUSH, CAMSHAFT	1							
14	2	27241-120000	PLUG, 12	1							
24	2	119717-02930	BEARING, THRUST	2							
27	1	119810-01200	BOLT, HEAD	14							
28	1	119717-01330	GASKET, HEAD	1							
29	1	719717-02901	BEARING, MAIN	4							1
32	1	719717-02911	BEARING, 0.25 US	4							2
35	1	119810-02941	BEARING, THRUST 0.25	2							3

N:Old ←Yes/No→ New. Q:Old ←No/Yes→ New. R:Old ←Yes/Yes→ New. S:Old ←No/No→ New. W:Add. Z:Discontinued. F:Interchangeable by set. K:Q'ty Change

Copyright (C) YANMAR GLOBAL CS CO., LTD. All RightsReserved.

Fig.2. GEAR HOUSING

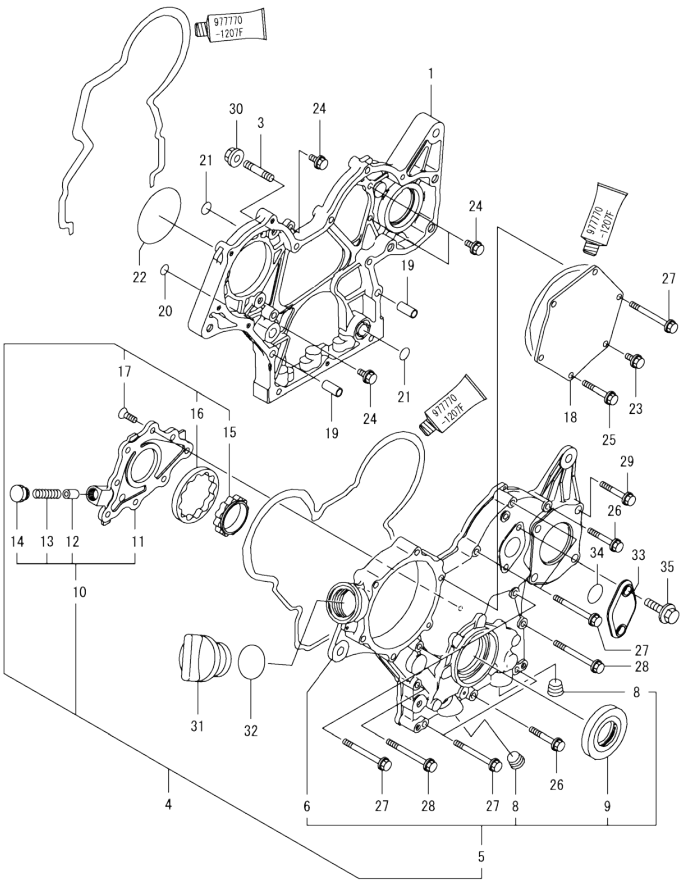

(A)=3TNV76-DVA
(B)=
(C)=
(D)=
(E)=
(F)=

No.	Lev.	Parts No.	Description	Q'ty (A)	(B)	(C)	(D)	(E)	(F)	I	R
1	1	119742-01500	CASE, GEAR	1							
3	1	119717-01570	STUD	3							
4	1	119740-01580	COVER ASSY,GEAR CASE	1							
5	2	719740-01510	COVER ASSY,GEAR CASE	1							
6	3	119740-01521	COVER, GEAR CASE	1							
8	4	23876-030000	PLUG, R03	2							
9	3	119717-01800	SEAL, OIL	1							
10	2	119717-32100	COVER ASSY	1							
11	3	119717-32080	COVER	1							
12	3	129900-32130	VALVE, RELIEF	1							
13	3	129001-32320	SPRING	1							
14	3	129001-32330	PLUG	1							
15	2	119717-32110	ROTOR, INNER	1							
16	2	119717-32120	ROTOR, OUTER	1							
17	2	119802-32130	SCREW, M6X16	8							
18	1	119717-01750	COVER	1							
19	1	119660-01911	PIPE, KNOCK	4							
20	1	119624-32040	O-RING, P12.0	1							
21	1	119717-32050	O-RING, P17.0	3							
22	1	121850-51960	O-RING	1							
23	1	26106-060122	BOLT, M6X 12 PLATED	1							
24	1	26106-060162	BOLT, M6X 16 PLATED	4							
25	1	26106-060402	BOLT, M6X 40 PLATED	4							
26	1	26106-060402	BOLT, M6X 40 PLATED	2							
27	1	26106-060602	BOLT, M6X 60 PLATED	7							
28	1	26106-060652	BOLT, M6X 65 PLATED	2							
29	1	26106-080352	BOLT, M8X 35 PLATED	3							
30	1	26306-080002	NUT, M8	3							
31	1	124160-01751	COVER, FILLER	1							
32	1	24311-000320	O-RING, 1AP32.0	1							
33	1	121023-01551	COVER	1							
34	1	24341-000240	O-RING, 1AS24.0	1							
35	1	26106-060162	BOLT, M6X 16 PLATED	2							

N:Old ◄Yes/No► New. Q:Old ◄No/Yes► New. R:Old ◄Yes/Yes► New. S:Old ◄No/No► New. W:Add. Z:Discontinued. F:Interchangeable by set. K:Q'ty Change

Copyright (C) YANMAR GLOBAL CS CO., LTD. All RightsReserved.

Fig.3. OIL SUMP

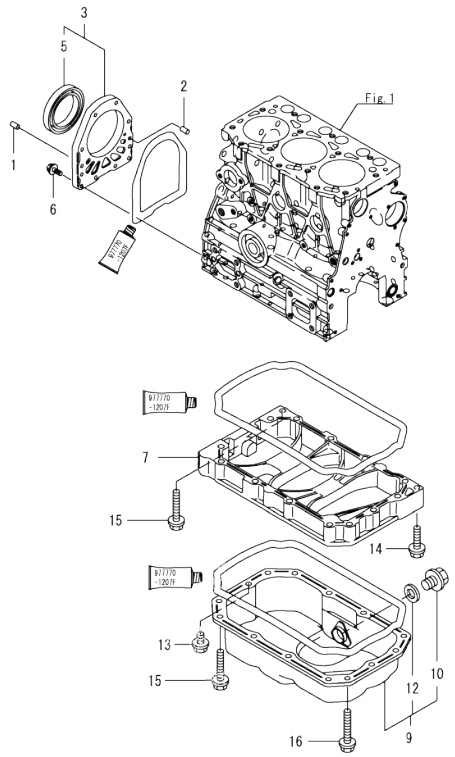

(A)=3TNV76-DVA
(B)=
(C)=
(D)=
(E)=
(F)=

No.	Lev.	Parts No.	Description	Q'ty (A)	(B)	(C)	(D)	(E)	(F)	I	R
1	1	129100-01580	PIN, M8X16	2							
2	1	119620-01620	PIN, M6X10	2							
3	1	119660-01640	CASE ASSY, OIL SEAL	1							
5	2	124085-02220	SEAL, OIL	1							
6	1	26106-060222	BOLT, M6X 22 PLATED	10							
7	1	119717-01720	SPACER, OIL SUMP	1							
9	1	119734-01770	SUMP ASSY, OIL	1							
10	2	119640-01640	PLUG, DRAIN M22	1							
12	2	22190-220002	WASHER, SEAL 22	1							
13	1	26106-080122	BOLT, M8X 12 PLATED	1							
14	1	26106-080302	BOLT, M8X 30 PLATED	1							
15	1	26106-080452	BOLT, M8X 45 PLATED	11							
16	1	26106-080502	BOLT, M8X 50 PLATED	3							

N:Old ←Yes/No→ New. Q:Old ←No/Yes→ New. R:Old ←Yes/Yes→ New. S:Old ←No/No→ New. W:Add. Z:Discontinued. F:Interchangeable by set. K:Q'ty Change

Copyright (C) YANMAR GLOBAL CS CO., LTD. All RightsReserved.

Fig.4. CYLINDER HEAD & BONNET

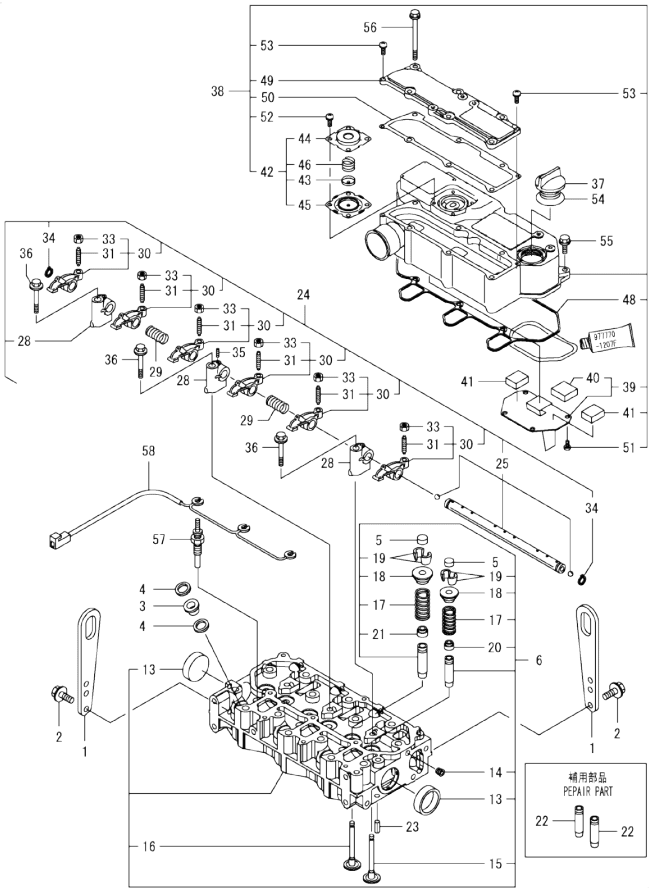

(A)=3TNV76-DVA
(B)=
(C)=
(D)=
(E)=
(F)=

No.	Lev.	Parts No.	Description	Q'ty (A)	(B)	(C)	(D)	(E)	(F)	I	R
1	1	129900-07900	LIFTER	2							
2	1	26106-080162	BOLT, M8X 16 PLATED	4							
3	1	129901-11450	PROTECTOR, NOZZLE	3							
4	1	119600-11460	GASKET, NOZZLE	6							
5	1	105010-11490	CAP, VALVE	6							
6	1	119717-11740	HEAD ASSY, CYLINDER	1							
13	2	119285-11990	PLUG, 35	2							
14	2	23876-005000	PLUG, R005	1							
15	2	119717-11101	VALVE, INTAKE	3							
16	2	119717-11110	VALVE, EXHAUST	3							
17	2	119717-11131	SPRING, VALVE	6							
18	2	129508-11180	RETAINER, SPRING	6							
19	2	119717-11190	COTTER	12							
20	2	119717-11340	SEAL, VALVE STEM	3							
21	2	119717-11350	SEAL, VALVE STEM	3							
22	1	119717-11800	GUIDE, VALVE	6							1
23	1	22351-060012	PIN, SPRING 6.0X12	2							
24	1	119717-11200	SUPPORT ASSY, ARM	1							
25	2	119717-11240	SHAFT ASSY, ROCKER	1							
28	2	119717-11260	SUPPORT, ROCKER ARM	3							
29	2	119620-11280	SPRING	2							
30	2	119717-11650	ARM, ROCKER	6							
31	3	129150-11230	SCREW, VALVE ADJUST	6							
33	3	129150-11750	NUT, M8	6							
34	2	22242-000120	RING, 12	2							
35	2	26979-050162	SCREW, M5X16	1							
36	1	26106-080402	BOLT, M8X 40 PLATED	3							
37	1	124160-01751	COVER, FILLER	1							
38	1	119717-11381	BONNET ASSY, HEAD	1							
39	2	119717-03031	PLATE	1							
40	3	119717-03070	BAFFLE, BREATHER	1							
41	2	119717-03070	BAFFLE, BREATHER	2							
42	2	119802-03100	DIAPHRAGM ASSY	1							
43	3	119802-03110	PLATE	1							
44	3	119802-03121	COVER, DIAPHRAGM	1							
45	3	119802-03131	DIAPHRAGM	1							
46	3	119802-03141	SPRING, DIAPHRAGM	1							
48	2	119718-11310	GASKET, BONNET	1							
49	2	119717-11320	COVER, BONNET	1							
50	2	119717-11331	GASKET	1							
51	2	22857-500100	SCREW, 5X10	4							
52	2	22857-500100	SCREW, 5X10	4							
53	2	22857-500160	SCREW, 5X16	2							
54	1	24311-000320	O-RING, 1AP32.0	1							
55	1	26106-060202	BOLT, M6X 20 PLATED	3							
56	1	26106-060752	BOLT, M6X 75 PLATED	6							
57	1	119717-77800	PLUG, GLOW	3							
58	1	119717-77820	CONNECTOR, GLOW PLUG	1							

Remarks
(1) Repair part.

N:Old $\xleftarrow[\text{No}]{\text{Yes}}$ New. Q:Old $\xleftarrow[\text{Yes}]{\text{No}}$ New, R:Old $\xleftarrow[\text{Yes}]{\text{Yes}}$ New, S:Old $\xleftarrow[\text{No}]{\text{No}}$ New. W:Add. Z:Discontinued. F:Interchangeable by set. K:Q'ty Change

Copyright (C) YANMAR GLOBAL CS CO., LTD. All RightsReserved.

0CW10-M57700 3TNV76-DVA

Fig.5. EXHAUST MANIFOLD

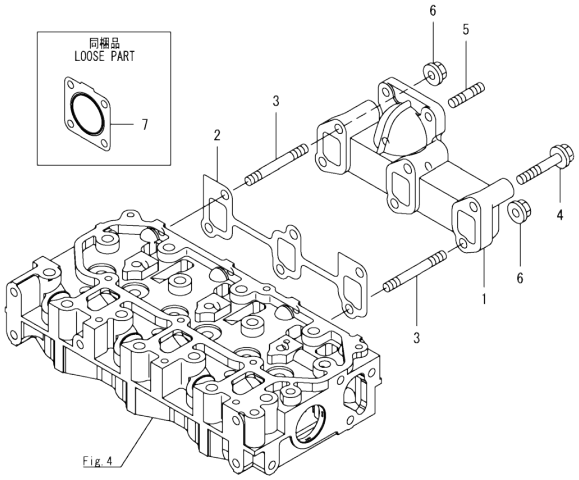

0CW10-M57700 Fig.5

(A)=3TNV76-DVA (D)=
(B)= (E)=
(C)= (F)=

No.	Lev.	Parts No.	Description	Q'ty (A)	(B)	(C)	(D)	(E)	(F)	I	R
1	1	119718-13100	MANIFOLD, EXHAUST	1							
2	1	119717-13110	GASKET	1							
3	1	119717-13600	STUD, M8X50	2							
4	1	119802-13620	BOLT, M8X50	4							
5	1	119131-18320	STUD, M8X22	4							
6	1	26306-080002	NUT, M8	2							
7	1	119515-13200	GASKET, SILENCER	1							

N:Old ◄Yes/No► New. Q:Old ◄No/Yes► New. R:Old ◄Yes/Yes► New. S:Old ◄No/No► New. W:Add. Z:Discontinued. F:Interchangeable by set. K:Q'ty Change

Copyright (C) YANMAR GLOBAL CS CO., LTD. All RightsReserved.

Fig.6. CAMSHAFT & DRIVING GEAR

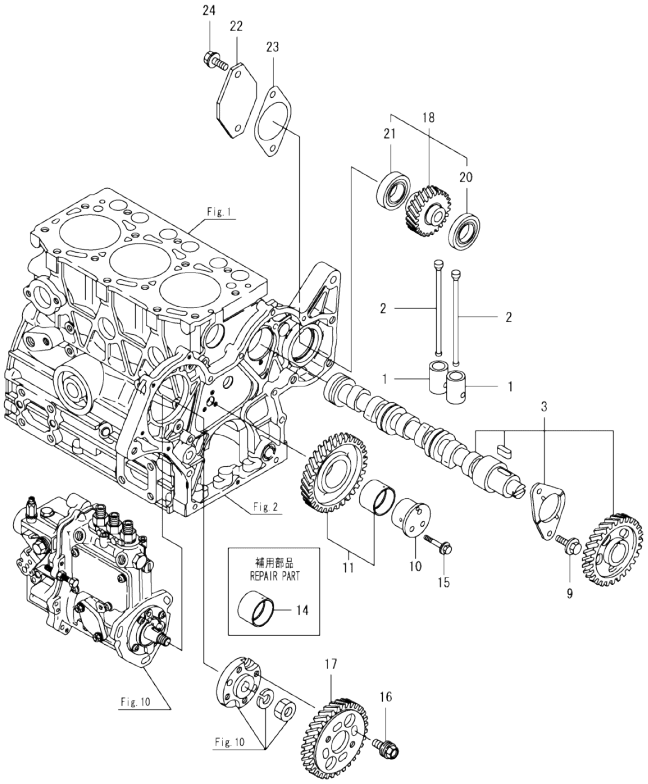

(A)=3TNV76-DVA
(B)=
(C)=
(D)=
(E)=
(F)=

No.	Lev.	Parts No.	Description	Q'ty (A)	(B)	(C)	(D)	(E)	(F)	I	R
1	1	119620-14200	TAPPET	6							
2	1	119717-14400	ROD, PUSH	6							
3	1	119717-14581	CAMSHAFT ASSY	1							
9	1	26106-060122	BOLT, M6X 12 PLATED	2							
10	1	119717-25050	SHAFT, IDLE	1							
11	1	119717-25101	GEAR ASSY, IDLE	1							
14	1	119717-25911	BUSH, IDLE GEAR	1							1
15	1	26106-060352	BOLT, M6X 35 PLATED	3							
16	1	129150-25301	BOLT	4							
17	1	119717-25930	GEAR, PUMP	1							
18	1	119744-26000	GEAR ASSY, PUMP	1							
20	2	129350-26490	BEARING, BALL 16005	1							
21	2	24104-060054	BEARING, BALL 6005UU	1							
22	1	119742-26071	COVER	1							
23	1	119742-26080	GASKET	1							
24	1	26106-080162	BOLT, M8X 16 PLATED	2							

Remarks
(1) Repair part.

N:Old ←Yes/No→ New. Q:Old ←No/Yes→ New. R:Old ←Yes/Yes→ New. S:Old ←No/No→ New. W:Add. Z:Discontinued. F:Interchangeable by set. K:Q'ty Change

Copyright (C) YANMAR GLOBAL CS CO., LTD. All RightsReserved.

Fig.7. CRANKSHAFT & PISTON

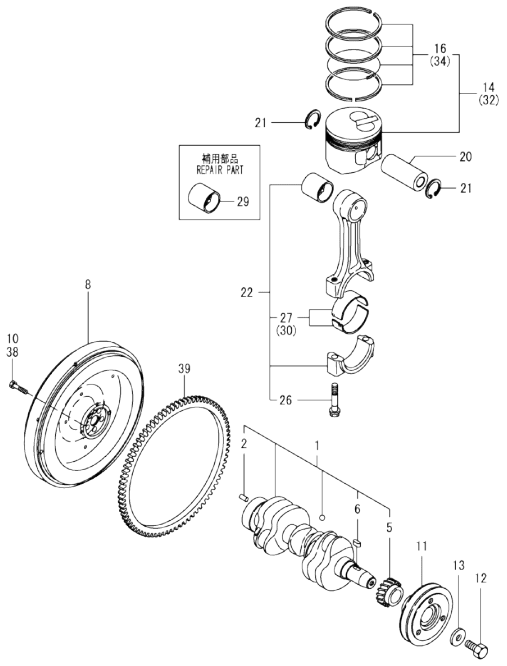

Remarks
(1)Repair part.
(2)Under-sized(U.S=0.25)part.
(3)Over-sized(O.S=0.25)part.
(4)Packaged part

(A)=3TNV76-DVA (D)=
(B)= (E)=
(C)= (F)=

No.	Lev.	Parts No.	Description	Q'ty (A)	(B)	(C)	(D)	(E)	(F)	I	R
1	1	119717-21700	CRANKSHAFT ASSY	1							
2	2	129100-01580	PIN, M8X16	1							
5	2	119717-21200	GEAR, CRANKSHAFT	1							
6	2	22512-040120	KEY, 4X 12	1							
8	1	119751-21410	FLYWHEEL	1							
10	1	121111-21501	BOLT, FLYWHEEL	5							
11	1	119717-21650	V-PULLEY	1							
12	1	119621-21681	BOLT, FLANGE 12X1.25	1							
13	1	119620-21941	WASHER	1							
14	1	119717-22080	PISTON ASSY	3							
16	2	119717-22500	RING SET, PISTON	3							
20	1	119717-22300	PIN, PISTON	3							
21	1	22252-000220	RING, 22	6							
22	1	119717-23000	ROD ASSY, CONNECTING	3							
26	2	119717-23200	BOLT, CONNECTING ROD	6							
27	1	119717-23601	BEARING, CRANK PIN	3							
29	1	119717-23910	BEARING, PISTON PIN	3							1
30	1	119717-23611	METAL ASSY, 0.25	3							2
32	1	119717-22090	PISTON ASSY, 0.25 OS	3							3
34	2	119717-22550	RING SET, 0.25 OS	3							3
38	1	121111-21501	BOLT, FLYWHEEL	5							4
39	1	124950-21600	GEAR, RING	1							4

N:Old ←Yes/No→ New. Q:Old ←No/Yes→ New. R:Old ←Yes/Yes→ New. S:Old ←No/No→ New. W:Add. Z:Discontinued. F:Interchangeable by set. K:Q'ty Change

Copyright (C) YANMAR GLOBAL CS CO., LTD. All RightsReserved.

Fig.8. LUB.OIL SYSTEM

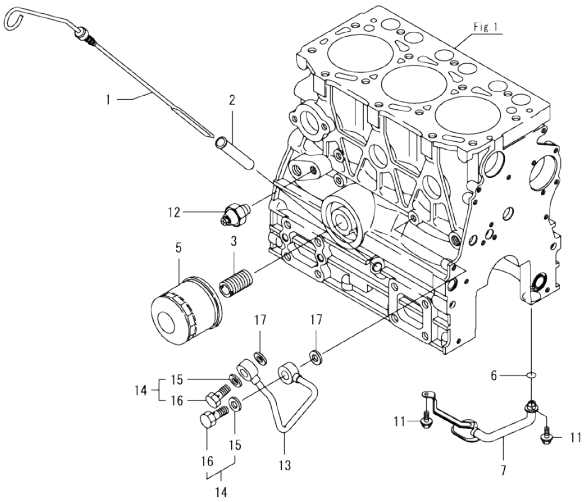

(A)=3TNV76-DVA (D)=
(B)= (E)=
(C)= (F)=

No.	Lev.	Parts No.	Description	Q'ty (A)	(B)	(C)	(D)	(E)	(F)	I	R
1	1	119734-34800	DIPSTICK, OIL	1							
2	1	121520-34810	GUIDE, DIPSTICK	1							
3	1	129100-35140	STUD	1							
5	1	119305-35151	FILTER ASSY, D68XL65	1							1
6	1	119717-32060	O-RING, P15.0	1							
7	1	119734-35080	PIPE ASSY, OIL INLET	1							
11	1	26106-060102	BOLT, M6X 10 PLATED	2							
12	1	114250-39450	SWITCH, 0.5KG	1							
13	1	119717-39210	PIPE, OIL	1							
14	1	129005-59830	BOLT ASSY, JOINT M8	2							
15	2	22190-080002	WASHER, SEAL 6	2							
16	2	23857-030000	BOLT, JOINT 3	2							
17	1	22190-080002	WASHER, SEAL 6	2							

Remarks
(1)Repair part.

N:Old $\frac{\text{Yes}}{\text{No}}$ New. Q:Old $\frac{\text{No}}{\text{Yes}}$ New. R:Old $\frac{\text{Yes}}{\text{Yes}}$ New. S:Old $\frac{\text{No}}{\text{No}}$ New. W:Add. Z:Discontinued. F:Interchangeable by set. K:Q'ty Change

Copyright (C) YANMAR GLOBAL CS CO., LTD. All RightsReserved.

Fig.9. COOLING WATER SYSTEM

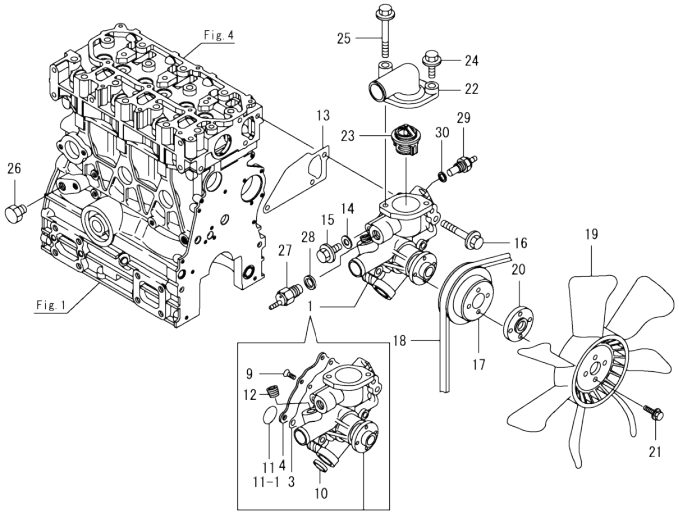

(A)=3TNV76-DVA (D)=
(B)= (E)=
(C)= (F)=

No.	Lev.	Parts No.	Description	Q'ty (A)	(B)	(C)	(D)	(E)	(F)	I	R
1	1	119717-42002	PUMP ASSY, WATER	1							
1-1	1	119E10-42000	PUMP ASSY, WATER	1						N	
	(A=*2012.03.)										
3	2	119717-42041	COVER	1							
4	2	119717-42031	GASKET	1							
9	2	26577-060122	SCREW, M6X12	4							
10	2	27241-250000	PLUG, 25	1							
11	2	119717-42320	O-RING, P26	1							
11-1	2	119C10-42320	O-RING, 2028	1						S	
	(A=*2012.03.)										
12	2	129916-49740	PLUG, R3/8	1							
13	1	119717-42020	GASKET, WATER PUMP	1							
14	1	23414-080000	GASKET, 8X1.0	1							
15	1	26106-080122	BOLT, M8X 12 PLATED	1							
16	1	26106-080502	BOLT, M8X 50 PLATED	3							
17	1	119717-42350	V-PULLEY, D=100	1							
18	1	25132-003700	V-BELT, A37	1							
19	1	119717-44740	FAN, COOLING D335X7	1							
20	1	124574-44761	SPACER, FAN	1							
21	1	26106-060202	BOLT, M6X 20 PLATED	4							
22	1	124101-49531	COVER, THERMOSTAT	1							
23	1	119717-49800	THERMOSTAT, 71C	1							
24	1	26106-080252	BOLT, M8X 25 PLATED	1							
25	1	26106-080602	BOLT, M8X 60 PLATED	1							
26	1	171056-49120	PLUG, DRAIN R1/4	1							
27	1	121250-44901	SWITCH, THERMO 110	1							
28	1	124465-44950	GASKET, 16	1							
29	1	124250-49351	SENSOR, WATER TEMP.	1							
30	1	129150-49360	GASKET	1							

N:Old ←Yes/No→ New. Q:Old ←No/Yes→ New. R:Old ←Yes/Yes→ New. S:Old ←No/No→ New. W:Add. Z:Discontinued. F:Interchangeable by set. K:Q'ty Change

Copyright (C) YANMAR GLOBAL CS CO., LTD. All RightsReserved.

Fig.10. FUEL INJECTION PUMP

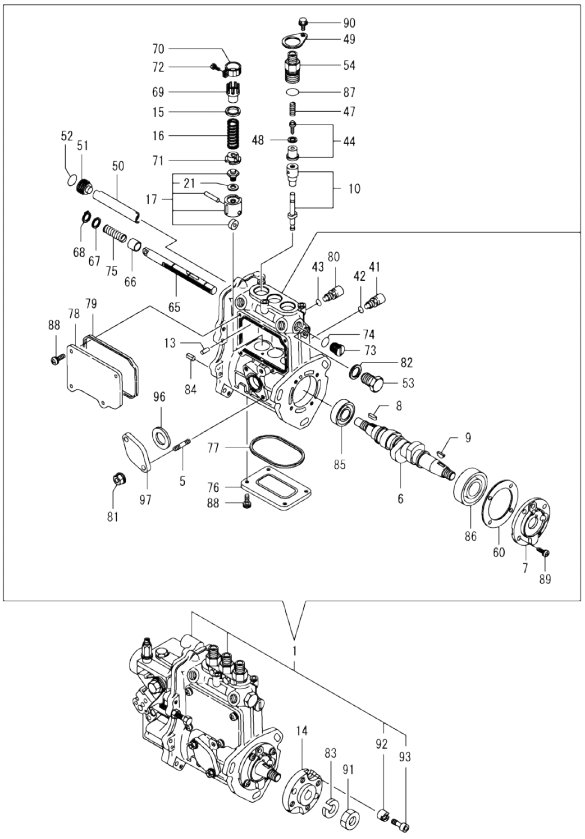

Remarks
(1)Governor assy(FIG.11) is
Incorporated in this FOP.CMP
(Ref.No.1).

(A)=3TNV76-DVA (D)=
(B)= (E)=
(C)= (F)=

No.	Lev.	Parts No.	Description	Q'ty (A)	(B)	(C)	(D)	(E)	(F)	I	R
1	1	719744-51400	PUMP ASSY, INJECTION	1							
5	3	129155-51020	STUD	2							
6	3	119717-51030	CAMSHAFT	1							
7	3	119717-51060	SUPPORT, CAMSHAFT	1							
8	3	119717-51070	KEY	1							
9	3	122710-51090	KEY	1							
10	3	119717-51100	PLUNGER ASSY	3							
13	3	129155-51140	PIN	3							
14	3	119717-51150	FLANGE	1							
15	3	158600-51170	RETAINER, SPRING	3							
16	3	119717-51190	SPRING, PLUNGER	3							
17	3	119717-51200	TAPPET ASSY	3							
21	4	129155-51600	SHIM SET, ADJUSTING	3							
41	3	158600-51270	STOPPER, TAPPET	3							
42	3	129155-51280	O-RING, S6	3							
43	3	129155-51280	O-RING, S6	3							
44	3	119717-51300	VALVE ASSY, DELIVERY	3							
47	3	119717-51330	SPRING, DELIVERY	3							
48	3	124550-51350	GASKET, DELIVERY	3							
49	3	118400-51370	LOCKING	3							
50	3	129155-51400	DEFLECTOR	1							
51	3	158600-51410	PLUG, DEFLECTOR	1							
52	3	119717-51420	O-RING	1							
53	3	158600-51420	PLUG, DEFLECTOR	1							
54	3	158600-51442	VALVE ASSY, DELIVERY	3							
60	3	129155-51450	SHIM SET, ADJUSTING	1							
65	3	119717-51500	RACK, CONTROL	1							
66	3	129155-51521	BUSH, RACK	1							
67	3	129155-51530	SPACER	1							
68	3	129155-51540	CIRCLIP	1							
69	3	129155-51550	PINION, CONTROL	3							
70	3	129100-51560	PINION	3							
71	3	119717-51570	RETAINER, SPRING	3							
72	3	129100-51570	SCREW	3							
73	3	158600-51570	PLUG	1							
74	3	129155-51580	O-RING	1							
75	3	129155-51591	SPRING, RACK	1							
76	3	129155-51701	COVER	1							
77	3	119717-51711	GASKET	1							
78	3	119717-51750	COVER	1							
79	3	119717-51761	GASKET	1							
80	3	158600-51790	STOOPER, RACK	1							
81	3	119717-51860	NUT, M6	2							
82	3	22190-160002	WASHER, SEAL 16	1							
83	3	22217-120000	WASHER, SPRING 12	1							
84	3	22351-050010	PIN, SPRING 5.0X10	2							
85	3	24101-060034	BEARING, BALL 6003	1							
86	3	24101-063034	BEARING, BALL 6303	1							
87	3	24316-000150	O-RING, 4DP15.0	3							
88	3	26022-050122	SCREW, M5X12	8							
89	3	26022-060162	SCREW, M6X16	4							

N:Old ←Yes/No→ New. Q:Old ←No/Yes→ New. R:Old ←Yes/Yes→ New. S:Old ←No/No→ New. W:Add. Z:Discontinued. F:Interchangeable by set. K:Q'ty Change

++ CONTINUE ++

Copyright (C) YANMAR GLOBAL CS CO., LTD. All RightsReserved.

Fig.10. FUEL INJECTION PUMP

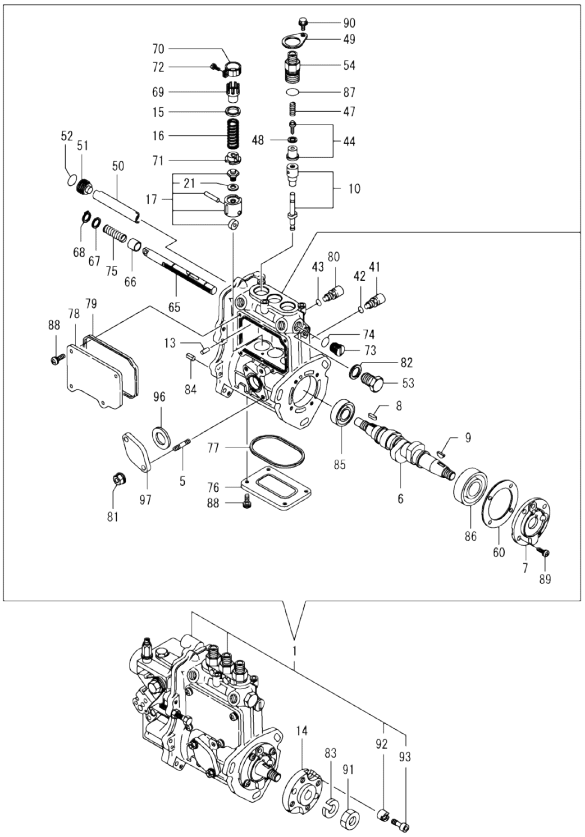

Remarks
(1)Governor assy(FIG.11) is
Incorporated in this FOP.CMP
(Ref.No.1).

(A)=3TNV76-DVA (D)=
(B)= (E)=
(C)= (F)=

No.	Lev.	Parts No.	Description	Q'ty (A)	(B)	(C)	(D)	(E)	(F)	I	R
90	3	26106-050102	BOLT, M5X 10 PLATED	3							
91	3	26716-120002	NUT, M12	1							
92	2	119717-51480	COLLAR	1							
93	2	119717-51490	BOLT	1							
96	3	129155-52051	GASKET	1							
97	3	129100-52200	COVER	1							

N:Old ←Yes/No→ New. Q:Old ←No/Yes→ New, R:Old ←Yes/Yes→ New. S:Old ←No/No→ New. W:Add. Z:Discontinued. F:Interchangeable by set. K:Q'ty Change

Copyright (C) YANMAR GLOBAL CS CO., LTD. All RightsReserved.

Fig.11. GOVERNOR

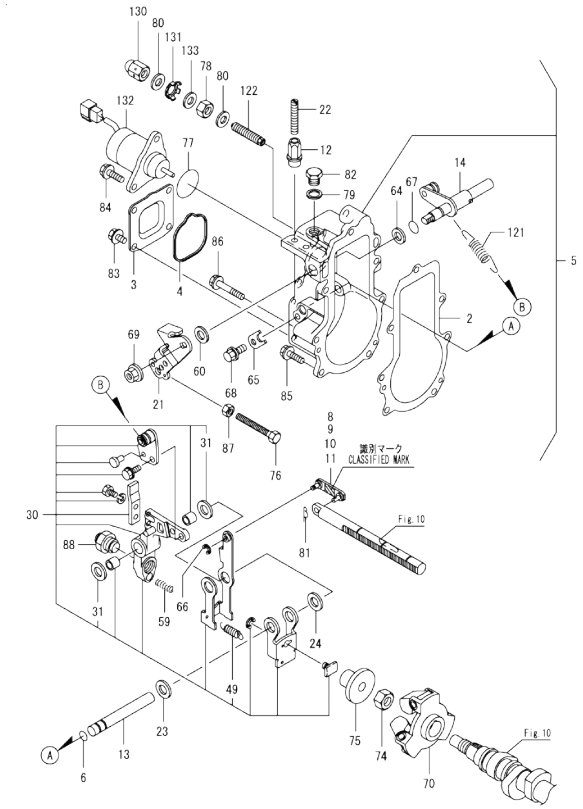

Remarks
* This figure(governor assy)is incorporated in the fuel injection pump assy(FIG.10).
(1) Selective parts;certain the classification mark,then place your order.(Ref.to.illustration).

(A)=3TNV76-DVA (D)=
(B)= (E)=
(C)= (F)=

No.	Lev.	Parts No.	Description	Q'ty (A)	(B)	(C)	(D)	(E)	(F)	I	R
2	2	119717-61050	GASKET	1							
3	2	119717-61060	COVER, GOVERNOR CASE	1							
4	2	119717-61070	GASKET	1							
5	2	119717-61100	CASE ASSY, GOVERNOR	1							
6	3	129155-51280	O-RING, S6	1							
8	3	119717-61120	LINK, MARK :3	1							1
9	3	119717-61130	LINK, MARK 98	1							1
10	3	119717-61140	LINK, MARK 88	1							1
11	3	119717-61150	LINK, MARK 03	1							1
12	3	129209-61370	NUT, M6	1							
13	3	129052-61390	SHAFT	1							
14	3	119717-61400	SHAFT ASSY	1							
21	3	119515-61440	LEVER, CONTROL	1							
22	3	129155-61450	BOLT, LIMITER	1							
23	3	129156-61460	SHIM, T=0.6	1							
24	3	129155-61480	SPACER ASSY	1							
30	3	119717-61500	LEVER ASSY, GOVERNOR	1							
31	4	174307-51700	SHIM SET	2							
49	4	129486-61540	SPRING, SET	1							
59	3	129100-61650	SPRING, CONTROLLER	1							
60	3	158552-61700	SHIM SET	1							
64	3	158552-61710	SHIM, T=1.0	1							
65	3	119660-61901	RETAINER, SHAFT	1							
66	3	22272-000030	RING, E- 3	1							
67	3	24341-000070	O-RING, 1AS7.0	1							
68	3	26106-060102	BOLT, M6X 10 PLATED	1							
69	3	26366-080002	NUT, M8	1							
70	2	119717-61201	WEIGHT ASSY,GOVERNOR	1							
74	2	129008-61301	NUT	1							
75	2	129155-61341	SLEEVE	1							
76	2	129155-61460	BOLT, IDLE	1							
77	2	158552-61900	O-RING	1							
78	2	129209-61920	NUT, ARB	1							
79	2	22190-100002	WASHER, SEAL 10	1							
80	2	22190-120002	WASHER, SEAL 12	2							
81	2	22372-040000	PIN, SNAP 4	1							
82	2	23887-100002	PLUG, 10	1							
83	2	26106-060102	BOLT, M6X 10 PLATED	4							
84	2	26106-060142	BOLT, M6X 14 PLATED	2							
85	2	26106-060202	BOLT, M6X 20 PLATED	4							
86	2	26106-060452	BOLT, M6X 45 PLATED	3							
87	2	26756-060002	NUT, LOCK M6	1							
88	2	119513-61550	ANGLEICH ASSY	1							
121	2	129573-61700	SPRING, GOVERNOR	1							
122	2	158601-61700	LIMITER ASSY, FUEL	1							
130	2	129209-61930	NUT, CAP	1							
131	2	129209-61970	PLATE	1							
132	2	119653-77950	SOLENOID, STOP	1							
133	2	23414-120016	GASKET, 12X1.0	1							

N:Old ←Yes/No→ New. Q:Old ←No/Yes→ New. R:Old ←Yes/Yes→ New. S:Old ←No/No→ New. W:Add. Z:Discontinued. F:Interchangeable by set. K:Q'ty Change

Copyright (C) YANMAR GLOBAL CS CO., LTD. All RightsReserved.

Fig.12. FUEL INJECTION VALVE

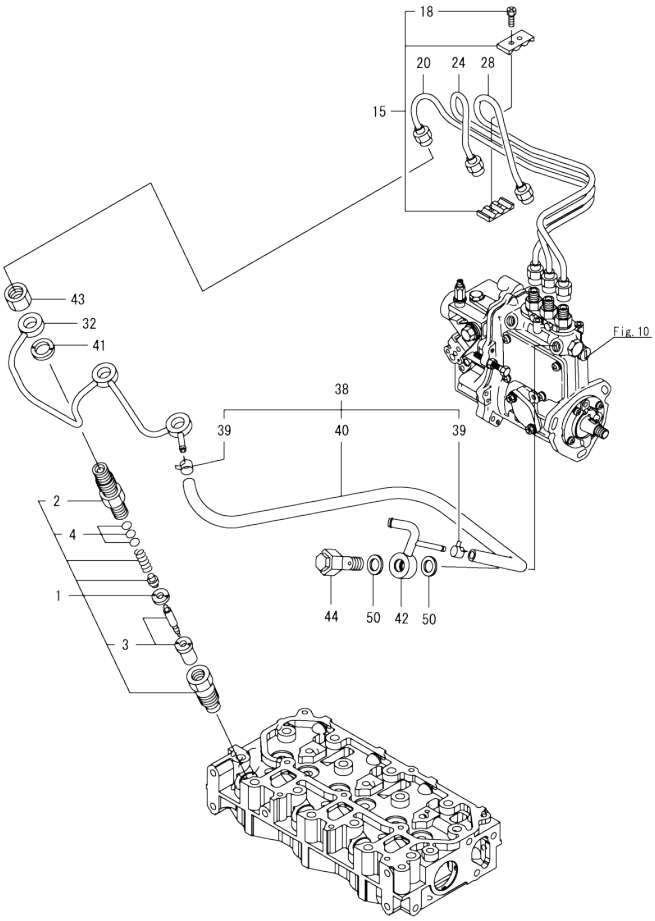

(A)=3TNV76-DVA (D)=
(B)= (E)=
(C)= (F)=

No.	Lev.	Parts No.	Description	Q'ty (A)	(B)	(C)	(D)	(E)	(F)	I	R
1	1	119717-53001	VALVE ASSY,INJECTION	3							
2	2	118200-53010	HOLDER, NOZZLE	3							
3	2	119717-53010	VALVE ASSY,INJECTION	3							
4	2	129901-53800	SHIM SET, ADJUSTING	3							
15	1	129150-59120	RETAINER, PIPE	1							
18	2	129150-59131	BOLT, M4X14	2							
20	1	119717-59810	PIPE ASSY, INJECTION	1							
24	1	119717-59820	PIPE ASSY, INJECTION	1							
28	1	119717-59830	PIPE ASSY, INJECTION	1							
32	1	119717-59510	PIPE ASSY, RETURN	1							
38	1	119744-59560	PIPE ASSY, RETURN	1							
39	2	124066-59100	CLIP, HOSE 8	2							
40	2	119744-59570	PIPE, FUEL RETURN	1							
41	1	129901-59560	GASKET	3							
42	1	119515-59581	JOINT, OVER FLOW	1							
43	1	119620-59700	NUT, NOZZLE	3							
44	1	119813-59950	VALVE ASSY, CHECK	1							
50	1	22190-120002	WASHER, SEAL 12	2							

N:Old ←Yes/No→ New. Q:Old ←No/Yes→ New. R:Old ←Yes/Yes→ New. S:Old ←No/No→ New. W:Add. Z:Discontinued. F:Interchangeable by set. K:Q'ty Change

Copyright (C) YANMAR GLOBAL CS CO., LTD. All RightsReserved.

Fig.13. FUEL LINE

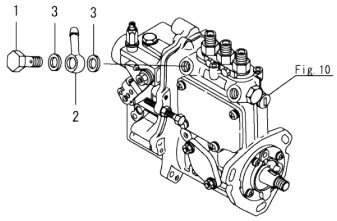

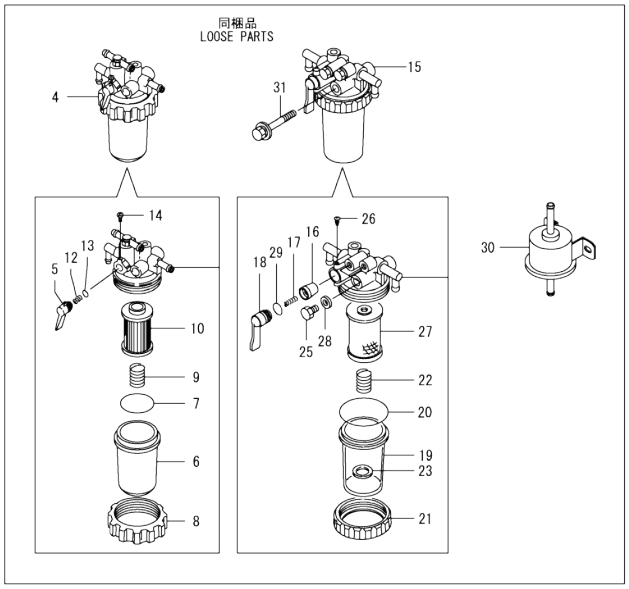

(A)=3TNV76-DVA (D)=
(B)= (E)=
(C)= (F)=

No.	Lev.	Parts No.	Description	Q'ty (A)	(B)	(C)	(D)	(E)	(F)	I	R
1	1	103854-39140	BOLT, PIPE JOINT	1							
2	1	101304-59020	JOINT, PIPE 12	1							
3	1	22190-120002	WASHER, SEAL 12	2							
4	1	119740-55600	FILTER ASSY, FUEL	1							
5	2	119810-55340	LEVER	1							
6	2	121254-55510	COVER	1							
7	2	102103-55520	O-RING	1							
8	2	110250-55610	RING, RETAINING	1							
9	2	121250-55620	SPRING	1							
10	2	119810-55650	ELEMENT	1							
12	2	104200-55330	SPRING, VALVE	1							
13	2	24311-240100	O-RING, 1AP10A	1							
14	2	104200-55750	SCREW, M4	1							
15	1	129335-55700	SEPARATOR ASSY,WATER	1							
16	2	104200-55321	VALVE, TAPER	1							
17	2	104200-55330	SPRING, VALVE	1							
18	2	104200-55341	HANDLE	1							
19	2	124064-55510	COVER	1							
20	2	102103-55520	O-RING	1							
21	2	110250-55610	RING, RETAINING	1							
22	2	121257-55720	SPRING	1							
23	2	121257-55731	FLOAT	1							
25	2	101720-55750	PLUG, 6	2							
26	2	104200-55750	SCREW, M4	1							
27	2	171081-55910	SCREEN	1							
28	2	23418-060000	GASKET, 6X1.0	2							
29	2	24311-240100	O-RING, 1AP10A	1							
30	1	119225-52102	PUMP ASSY, FUEL FEED	1							
31	1	26014-080702	BOLT, M8X 70	1							

N:Old ←Yes/No→ New. Q:Old ←No/Yes→ New. R:Old ←Yes/Yes→ New. S:Old ←No/No→ New. W:Add. Z:Discontinued. F:Interchangeable by set. K:Q'ty Change

Copyright (C) YANMAR GLOBAL CS CO., LTD. All RightsReserved.

Fig.14. STARTING MOTOR

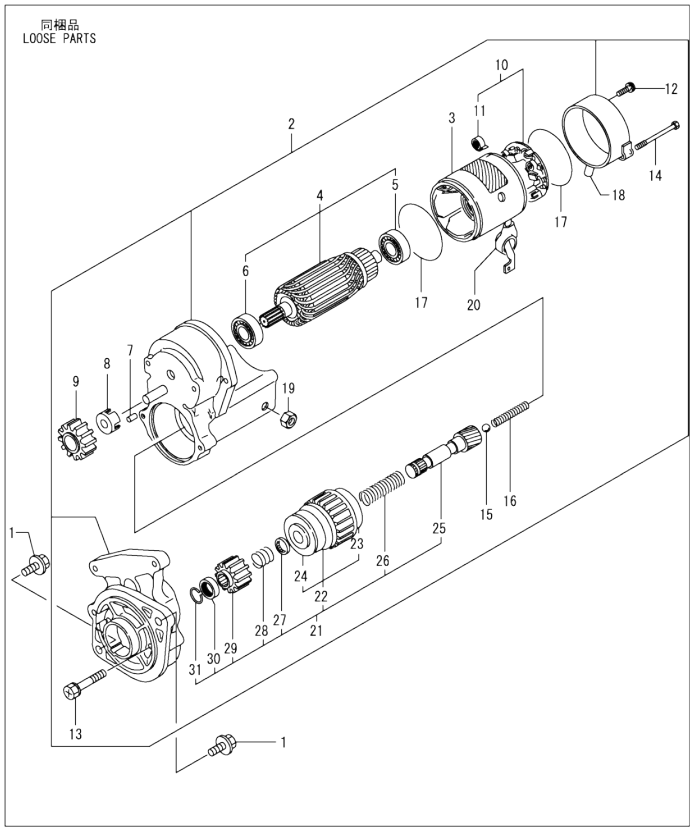

(A)=3TNV76-DVA (D)=
(B)= (E)=
(C)= (F)=

No.	Lev.	Parts No.	Description	Q'ty (A)	(B)	(C)	(D)	(E)	(F)	I	R
1	1	26106-100252	BOLT, M10X 25 PLATED	2							
2	1	119540-77010	STARTER, RA1.4	1							
3	2	129407-77210	YOKE ASSY	1							
4	2	129407-77220	ARMATURE ASSY	1							
5	3	129129-77230	BEARING	1							
6	3	129129-77240	BEARING	1							
7	2	X0283060061	ROLLER	5							
8	2	129129-77260	RETAINER	1							
9	2	129129-77270	PINION	1							
10	2	129407-77300	HOLDER ASSY	1							
11	3	X9491730461	SPRING	4							
12	2	129129-77460	SCREW	2							
13	2	129129-77320	BOLT	2							
14	2	129407-77330	BOLT	2							
15	2	X9491200240	BALL	1							
16	2	129129-77340	SPRING	1							
17	2	129129-77350	O-RING	2							
18	2	129129-77362	COVER	1							
19	2	X9490561370	NUT	1							
20	2	129129-77380	CAP	1							
21	2	X1280996600	STARTER KIT	1							
22	3	129129-77390	CLUTCH ASSY, STARTER	1							
23	4	129129-77440	BALL BEARING	1							
24	4	129129-77450	BALL BEARING	1							
25	3	129129-77400	SHAFT	1							
26	3	129129-77410	SPRING, COIL	1							
27	3	X0283270140	RETAINER, SNAP	1							
28	3	129407-77410	SPRING	1							
29	3	X0283712350	PINION, STARTER	1							
30	3	X0280210230	NUT	1							
31	3	129129-77430	RING, SNAP	1							

N:Old ◄Yes/No► New. Q:Old ◄No/Yes► New. R:Old ◄Yes/Yes► New. S:Old ◄No/No► New. W:Add. Z:Discontinued. F:Interchangeable by set. K:Q'ty Change

Copyright (C) YANMAR GLOBAL CS CO., LTD. All RightsReserved.

Fig.15. GENERATOR

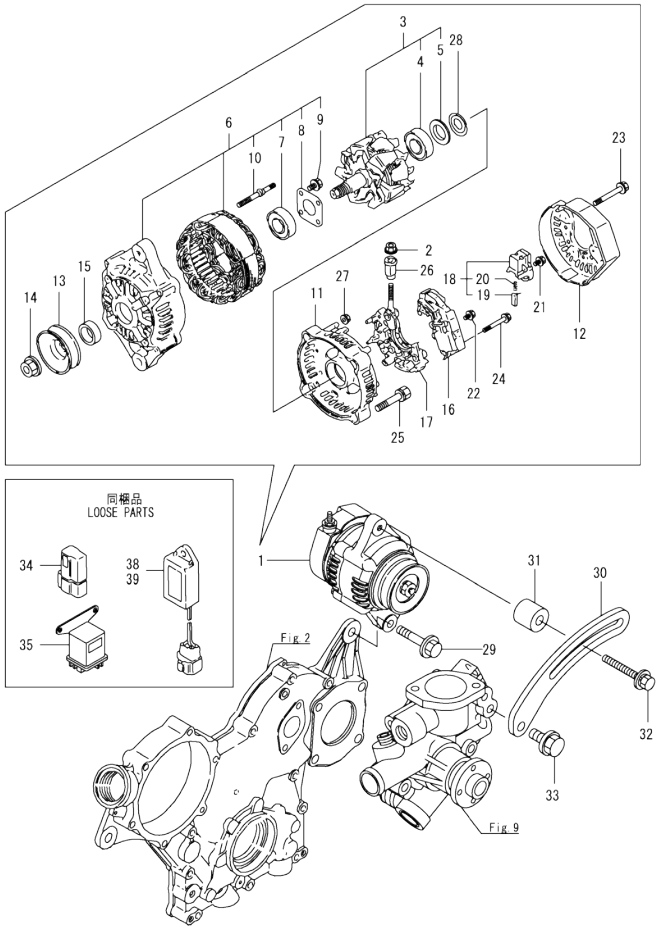

(A)=3TNV76-DVA (D)=
(B)= (E)=
(C)= (F)=

No.	Lev.	Parts No.	Description	Q'ty (A)	(B)	(C)	(D)	(E)	(F)	I	R
1	1	129423-77200	GENERATOR, 12V-40A	1							
2	2	X9490561001	NUT	1							
3	2	119620-77380	ROTOR ASSY	1							
4	3	123501-79240	BEARING, BALL	1							
5	3	119620-79250	COVER, BEARING	1							
6	2	119620-77421	FRAME ASSY, DRIVE	1							
7	3	119620-79200	BALL BEARING	1							
8	3	119620-79210	PLATE, RETAINER	1							
9	3	119620-79220	SCREW	4							
10	3	119620-79230	STUD	2							
11	2	119620-77440	FLAME ASSY, REAR	1							
12	2	129240-79300	COVER	1							
13	2	119620-77461	PULLEY	1							
14	2	119620-77471	NUT	1							
15	2	119620-77490	COLLAR	1							
16	2	129423-77710	REGULATOR ASSY	1							
17	2	119620-79260	HOLDER	1							
18	2	129052-79270	HOLDER, BRUSH	1							
19	3	119620-77480	BRUSH ASSY	2							
20	3	119620-79280	SPRING	2							
21	2	119620-79290	SCREW	1							
22	2	119620-79300	SCREW	1							
23	2	119620-79310	BOLT	3							
24	2	119620-79320	SCREW	2							
25	2	119620-79330	BOLT	2							
26	2	119620-79340	BUSH, INSULATION	1							
27	2	119620-79350	NUT	2							
28	2	119620-79360	WASHER, THRUST	1							
29	1	26106-100452	BOLT, M10X 45 PLATED	1							
30	1	119515-77330	ADJUSTER	1							
31	1	124732-77340	SPACER	1							
32	1	129972-77341	BOLT, ADJUSTER L=50	1							
33	1	26106-080202	BOLT, M8X 20 PLATED	1							
34	1	119643-66900	DIODE	1							
35	1	119650-77910	RELAY ASSY, GLOW	1							
38	1	129155-77925	TIMER	1							
39	1	129211-77920	TIMER	1							

N:Old ←Yes/No→ New. Q:Old ←No/Yes→ New. R:Old ←Yes/Yes→ New. S:Old ←No/No→ New. W:Add. Z:Discontinued. F:Interchangeable by set. K:Q'ty Change

Copyright (C) YANMAR GLOBAL CS CO., LTD. All RightsReserved.

Fig.16. GASKET SET

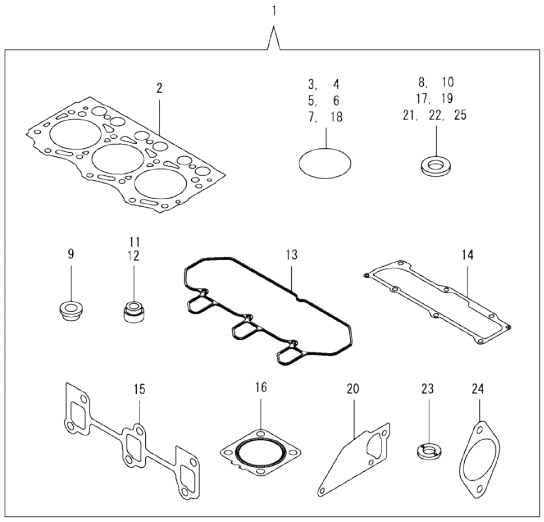

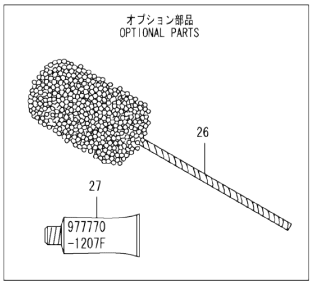

Remarks
(1) Optional part.

(A)=3TNV76-DVA (D)=
(B)= (E)=
(C)= (F)=

No.	Lev.	Parts No.	Description	Q'ty (A)	(B)	(C)	(D)	(E)	(F)	I	R
1	1	719717-92940	GASKET SET	1							1
2	2	119717-01330	GASKET, HEAD	1							
3	2	119624-32040	O-RING, P12.0	1							
4	2	119717-32050	O-RING, P17.0	3							
5	2	121850-51960	O-RING	1							
6	2	24311-000320	O-RING, 1AP32.0	2							
7	2	24341-000240	O-RING, 1AS24.0	1							
8	2	22190-160002	WASHER, SEAL 16	1							
9	2	129901-11450	PROTECTOR, NOZZLE	3							
10	2	119600-11460	GASKET, NOZZLE	6							
11	2	119717-11340	SEAL, VALVE STEM	3							
12	2	119717-11350	SEAL, VALVE STEM	3							
13	2	119718-11310	GASKET, BONNET	1							
14	2	119717-11331	GASKET	1							
15	2	119717-13110	GASKET	1							
16	2	119515-13200	GASKET, SILENCER	1							
17	2	22190-120002	WASHER, SEAL 12	4							
18	2	119717-32060	O-RING, P15.0	1							
19	2	22190-080002	WASHER, SEAL 6	4							
20	2	119717-42020	GASKET, WATER PUMP	1							
21	2	23414-080000	GASKET, 8X1.0	1							
22	2	124465-44950	GASKET, 16	2							
23	2	129901-59560	GASKET	3							
24	2	119742-26080	GASKET	1							
25	2	129150-49360	GASKET	1							
26	1	129400-92420	FLEX HORN	1							1
27	1	977770-1207F	GASKET.LIQUID	1							1

N:Old ←Yes/No→ New. Q:Old ←No/Yes→ New. R:Old ←Yes/Yes→ New. S:Old ←No/No→ New. W:Add. Z:Discontinued. F:Interchangeable by set. K:Q'ty Change

Copyright (C) YANMAR GLOBAL CS CO., LTD. All RightsReserved.

Parts No. Index

Parts No.	Fig. No.	Ref. No.
101304-59020	13	2
101720-55750	13	25
102103-55520	13	7
		20
103854-39140	13	1
104200-55321	13	16
104200-55330	13	12
		17
104200-55341	13	18
104200-55750	13	14
		26
105010-11490	4	5
105311-01090	1	6
110250-55610	13	8
		21
114250-39450	8	12
118200-53010	12	2
118400-51370	10	49
119131-18320	5	5
119225-52102	13	30
119285-01990	1	9
119285-11990	4	13
119305-35151	8	5
119513-61550	11	88
119515-13200	5	7
	16	16
119515-59581	12	42
119515-61440	11	21
119515-77330	15	30
119540-77010	14	2
119600-11460	4	4
	16	10
119620-01620	3	2
119620-02020	1	10
119620-11280	4	29
119620-14200	6	1
119620-21941	7	13
119620-59700	12	43
119620-77380	15	3
119620-77421	15	6
119620-77440	15	11
119620-77461	15	13
119620-77471	15	14
119620-77480	15	19
119620-77490	15	15
119620-79200	15	7
119620-79210	15	8
119620-79220	15	9
119620-79230	15	10
119620-79250	15	5

Parts No.	Fig. No.	Ref. No.
119620-79260	15	17
119620-79280	15	20
119620-79290	15	21
119620-79300	15	22
119620-79310	15	23
119620-79320	15	24
119620-79330	15	25
119620-79340	15	26
119620-79350	15	27
119620-79360	15	28
119621-21681	7	12
119623-01250	1	7
119624-32040	2	20
	16	3
119640-01640	3	10
119643-66900	15	34
119650-77910	15	35
119653-77950	11	132
119660-01640	3	3
119660-01911	2	19
119660-61901	11	65
119717-01330	1	28
	16	2
119717-01570	2	3
119717-01720	3	7
119717-01750	2	18
119717-01800	2	9
119717-02411	1	13
119717-02930	1	24
119717-03031	4	39
119717-03070	4	40
		41
119717-11101	4	15
119717-11110	4	16
119717-11131	4	17
119717-11190	4	19
119717-11200	4	24
119717-11240	4	25
119717-11260	4	28
119717-11320	4	49
119717-11331	4	50
	16	14
119717-11340	4	20
	16	11
119717-11350	4	21
	16	12
119717-11381	4	38
119717-11650	4	30
119717-11740	4	6
119717-11800	4	22

Parts No.	Fig. No.	Ref. No.
119717-13110	5	2
	16	15
119717-13600	5	3
119717-14400	6	2
119717-14581	6	3
119717-21200	7	5
119717-21650	7	11
119717-21700	7	1
119717-22080	7	14
119717-22090	7	32
119717-22300	7	20
119717-22500	7	16
119717-22550	7	34
119717-23000	7	22
119717-23200	7	26
119717-23601	7	27
119717-23611	7	30
119717-23910	7	29
119717-25050	6	10
119717-25101	6	11
119717-25911	6	14
119717-25930	6	17
119717-32050	2	21
	16	4
119717-32060	8	6
	16	18
119717-32080	2	11
119717-32100	2	10
119717-32110	2	15
119717-32120	2	16
119717-39210	8	13
119717-42002	9	1
119717-42020	9	13
	16	20
119717-42031	9	4
119717-42041	9	3
119717-42320	9	11
119717-42350	9	17
119717-44740	9	19
119717-49800	9	23
119717-51030	10	6
119717-51060	10	7
119717-51070	10	8
119717-51100	10	10
119717-51150	10	14
119717-51190	10	16
119717-51200	10	17
119717-51300	10	44
119717-51330	10	47
119717-51420	10	52

Parts No.	Fig. No.	Ref. No.
119717-51480	10	92
119717-51490	10	93
119717-51500	10	65
119717-51570	10	71
119717-51711	10	77
119717-51750	10	78
119717-51761	10	79
119717-51860	10	81
119717-53001	12	1
119717-53010	12	3
119717-59510	12	32
119717-59810	12	20
119717-59820	12	24
119717-59830	12	28
119717-61050	11	2
119717-61060	11	3
119717-61070	11	4
119717-61100	11	5
119717-61120	11	8
119717-61130	11	9
119717-61140	11	10
119717-61150	11	11
119717-61201	11	70
119717-61400	11	14
119717-61500	11	30
119717-77800	4	57
119717-77820	4	58
119718-11310	4	48
	16	13
119718-13100	5	1
119734-01770	3	9
119734-34800	8	1
119734-35080	8	7
119740-01521	2	6
119740-01580	2	4
119740-55600	13	4
119742-01500	2	1
119742-26071	6	22
119742-26080	6	23
	16	24
119744-26000	6	18
119744-59560	12	38
119744-59570	12	40
119751-21410	7	8
119802-03100	4	42
119802-03110	4	43
119802-03121	4	44
119802-03131	4	45
119802-03141	4	46
119802-13620	5	4

Parts No. Index

Parts No.	Fig. No.	Ref. No.
119802-32130	2	17
119810-01200	1	27
119810-02941	1	35
119810-55340	13	5
119810-55650	13	10
119813-59950	12	44
119C10-42320	9	11 -1
119E10-42000	9	1 -1
121023-01551	2	33
121111-21501	7	10
		38
121250-44901	9	27
121250-55620	13	9
121254-55510	13	6
121257-55720	13	22
121257-55731	13	23
121520-34810	8	2
121850-51960	2	22
	16	5
122710-51090	10	9
123501-79240	15	4
124060-01050	1	5
124064-55510	13	19
124066-59100	12	39
124085-02220	3	5
124101-49531	9	22
124160-01751	2	31
	4	37
124160-01910	1	8
124250-49351	9	29
124465-44950	9	28
	16	22
124550-51350	10	48
124574-44761	9	20
124732-77340	15	31
124950-21600	7	39
129001-32320	2	13
129001-32330	2	14
129005-59830	8	14
129008-61301	11	74
129052-61390	11	13
129052-79270	15	18
129100-01580	3	1
	7	2
129100-35140	8	3
129100-51560	10	70
129100-51570	10	72
129100-52200	10	97
129100-61650	11	59
129129-77230	14	5

Parts No.	Fig. No.	Ref. No.
129129-77240	14	6
129129-77260	14	8
129129-77270	14	9
129129-77320	14	13
129129-77340	14	16
129129-77350	14	17
129129-77362	14	18
129129-77380	14	20
129129-77390	14	22
129129-77400	14	25
129129-77410	14	26
129129-77430	14	31
129129-77440	14	23
129129-77450	14	24
129129-77460	14	12
129150-11230	4	31
129150-11750	4	33
129150-25301	6	16
129150-49360	9	30
	16	25
129150-59120	12	15
129150-59131	12	18
129155-51020	10	5
129155-51140	10	13
129155-51280	10	42
		43
	11	6
129155-51400	10	50
129155-51450	10	60
129155-51521	10	66
129155-51530	10	67
129155-51540	10	68
129155-51550	10	69
129155-51580	10	74
129155-51591	10	75
129155-51600	10	21
129155-51701	10	76
129155-52051	10	96
129155-61341	11	75
129155-61450	11	22
129155-61460	11	76
129155-61480	11	24
129155-77925	15	38
129156-61460	11	23
129209-61370	11	12
129209-61920	11	78
129209-61930	11	130
129209-61970	11	131
129211-77920	15	39
129240-79300	15	12

Parts No.	Fig. No.	Ref. No.
129335-55700	13	15
129350-26490	6	20
129400-92420	16	26
129407-77210	14	3
129407-77220	14	4
129407-77300	14	10
129407-77330	14	14
129407-77410	14	28
129423-77200	15	1
129423-77710	15	16
129486-61540	11	49
129508-11180	4	18
129573-61700	11	121
129900-07900	4	1
129900-32130	2	12
129901-11450	4	3
	16	9
129901-53800	12	4
129901-59560	12	41
	16	23
129916-49740	9	12
129972-77341	15	32
158552-61700	11	60
158552-61710	11	64
158552-61900	11	77
158600-51170	10	15
158600-51270	10	41
158600-51410	10	51
158600-51420	10	53
158600-51442	10	54
158600-51570	10	73
158600-51790	10	80
158601-61700	11	122
171056-49120	9	26
171081-55910	13	27
174307-51700	11	31
22190-080002	8	15
		17
	16	19
22190-100002	11	79
22190-120002	11	80
	12	50
	13	3
	16	17
22190-160002	10	82
	16	8
22190-220002	3	12
22217-120000	10	83
22242-000120	4	34
22252-000220	7	21

Parts No.	Fig. No.	Ref. No.
22272-000030	11	66
22351-050010	10	84
22351-060012	4	23
22372-040000	11	81
22512-040120	7	6
22857-500100	4	51
		52
22857-500160	4	53
23414-080000	9	14
	16	21
23414-120016	11	133
23418-060000	13	28
23857-030000	8	16
23876-005000	4	14
23876-030000	2	8
23887-100002	11	82
24101-060034	10	85
24101-063034	10	86
24104-060054	6	21
24311-000320	2	32
	4	54
	16	6
24311-240100	13	13
		29
24316-000150	10	87
24341-000070	11	67
24341-000240	2	34
	16	7
25132-003700	9	18
26014-080702	13	31
26022-050122	10	88
26022-060162	10	89
26106-050102	10	90
26106-060102	8	11
	11	68
		83
26106-060122	2	23
	6	9
26106-060142	11	84
26106-060162	2	24
		35
26106-060202	4	55
	9	21
	11	85
26106-060222	3	6
26106-060352	6	15
26106-060402	2	25
		26
26106-060452	11	86
26106-060602	2	27

Parts No. Index

Parts No.	Fig. No.	Ref. No.
26106-060652	2	28
26106-060752	4	56
26106-080122	3	13
	9	15
26106-080162	4	2
	6	24
26106-080202	15	33
26106-080252	9	24
26106-080302	3	14
26106-080352	2	29
26106-080402	4	36
26106-080452	3	15
26106-080502	3	16
	9	16
26106-080602	9	25
26106-100252	14	1
26106-100452	15	29
26306-080002	2	30
	5	6
26366-080002	11	69
26577-060122	9	9
26716-120002	10	91
26756-060002	11	87
26979-050162	4	35
27241-120000	1	14
27241-250000	9	10
719717-01561	1	1
719717-02901	1	29
719717-02911	1	32
719717-92940	16	1
719740-01510	2	5
719744-51400	10	1
977770-1207F	16	27
X0280210230	14	30
X0283060061	14	7
X0283270140	14	27
X0283712350	14	29
X1280996600	14	21
X9490561001	15	2
X9490561370	14	19
X9491200240	14	15
X9491730461	14	11

Parts No.	Fig. No.	Ref. No.

Parts No.	Fig. No.	Ref. No.

Parts No.	Fig. No.	Ref. No.