YANMAR

PARTS CATALOG

0CD10-M85201EN

Last update Dec., 2020

PREFACE

This parts catalog is the 2nd edition of 3TNV76-FDG for DENYO Co., Ltd..

Published : March, 2020

Contents

0CD10-M85201

Fig. No.	Fig. Name
ENGINE SECTION	
1.	CYLINDER BLOCK
2.	GEAR HOUSING
3.	FLYWHEEL HOUSING & OIL SUMP
4.	CYLINDER HEAD & BONNET
5.	EXHAUST MANIFOLD
6.	CAMSHAFT & DRIVING GEAR
7.	CRANKSHAFT & PISTON
8.	LUB. OIL SYSTEM
9.	COOLING WATER SYSTEM
10.	FUEL INJECTION PUMP
18.	(10A)FUEL INJECTION PUMP
11.	GOVERNOR
19.	(11A)GOVERNOR
12.	FUEL INJECTION VALVE
17.	(12A)FUEL INJECTION VALVE
20.	(12B)FUEL INJECTION VALVE
13.	STARTER MOTOR
14.	GENERATOR
15.	ELECTRIC PARTS
16.	GASKET SET

Fig.1. CYLINDER BLOCK

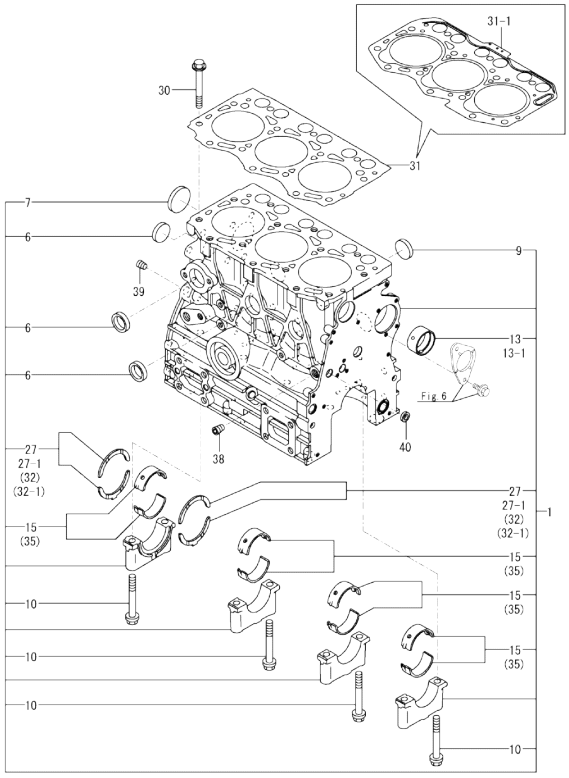

Remarks
(1)Over-sized(O.S.=0.25) parts.
(2)Spare parts.
(3)Under-sized(U.S.=0.25) parts.
(4)Pd free material.
(5)Under-sized(U.S.=0.25) parts. Pb free material.

(A)=3TNV76-FDG (D)=
(B)= (E)=
(C)= (F)=

No.	Lev.	Parts No.	Description	Q'ty (A)	(B)	(C)	(D)	(E)	(F)	I	R
1	1	719717-01561	BLOCK ASSY, CYLINDER	1							
6	2	105311-01090	PLUG, 30	4							
7	2	119623-01250	PLUG, 45	1							
9	2	119285-01990	PLUG, 25	3							
10	2	119620-02020	BOLT, METAL CAP	8							
13	2	119717-02410	BUSH, CAMSHAFT	1							
13-1	2	119717-02411	BUSH, CAMSHAFT	1						S	4
	(A=E29946)										
15	2	719717-02900	METAL ASSY, MAIN	4							2
27	2	119810-02930	BEARING ASSY, THRUST	1							
27-1	2	119717-02930	METAL ASSY, THRUST	2						S	4
	(A=E08421)										
30	1	119810-01200	BOLT, CYLINDER HEAD	14							
31	1	119717-01330	GASKET, HEAD	1							
31-1	1	119717-01331	GASKET, HEAD	1						S	
	(A=EA3906)										
32	1	119810-02940	METAL ASSY, 0.25 OS	2							1
32-1	1	119810-02941	METAL ASSY, 0.25 OS	2						S	5
	(A=E08421)										
35	1	719717-02910	BEARING ASSY, MAIN	4							3
38	1	124060-01050	PLUG, PT1/8	1							
39	1	124160-01910	PLUG, PT1/4	1							
40	1	27241-120000	PLUG, 12	1							

N:Old ←Yes/No→ New. Q:Old ←No/Yes→ New. R:Old ←Yes/Yes→ New. S:Old ←No/No→ New. W:Add. Z:Discontinued. F:Interchangeable by set. K:Q'ty Change

Copyright (C) 2020 YANMAR GLOBAL CS CO., LTD. All RightsReserved.

Fig.2. GEAR HOUSING

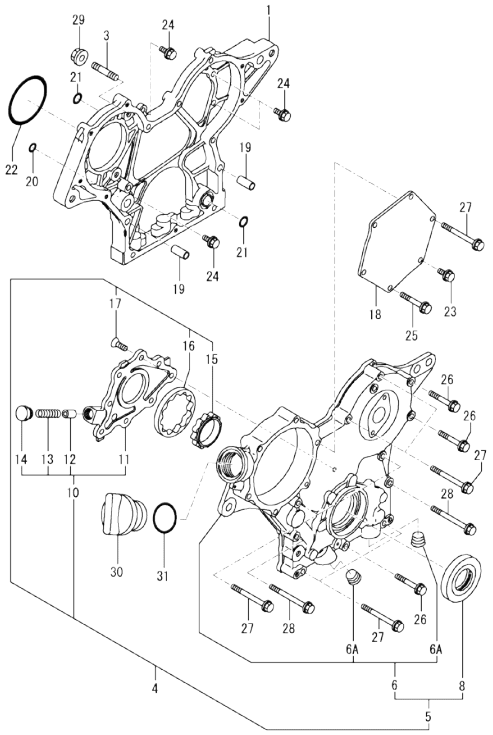

(A)=3TNV76-FDG
(B)=
(C)=
(D)=
(E)=
(F)=

No.	Lev.	Parts No.	Description	Q'ty (A)	(B)	(C)	(D)	(E)	(F)	I	R
1	1	119717-01501	CASE, GEAR	1							
3	1	119717-01570	STUD	3							
4	1	119717-01590	COVER ASSY, CASE	1							
4-1	1	119734-01590	COVER ASSY, CASE	1						N	
	(A=E33478)										
5	2	719717-01500	COVER ASSY, CASE	1							
5-1	2	719734-01500	COVER ASSY, CASE	1						N	
	(A=E33478)										
6	3	119717-01521	COVER, GEAR CASE	1							
6A	4	23876-030000	PLUG, R03	2							
8	3	119620-01800	SEAL, OIL HTC456208	1							
8-1	3	119717-01800	SEAL, OIL	1						N	
	(A=E33478)										
10	2	119717-32100	COVER ASSY, PUMP	1							
11	3	119717-32080	COVER, OIL PUMP	1							
12	3	129900-32130	VALVE, RELIEF	1							
13	3	129001-32320	SPRING	1							
14	3	129001-32330	PLUG	1							
15	2	119717-32110	ROTOR, INNER	1							
16	2	119717-32120	ROTOR, OUTER	1							
17	2	119802-32130	SCREW, M6X16	8							
18	1	119717-01750	COVER, PUMP	1							
19	1	119660-01911	PIPE, KNOCK 6X17	4							
20	1	119624-32040	O-RING, P12.0	1							
21	1	119717-32050	O-RING, P17.0	3							
22	1	121850-51960	O-RING, FUEL PUMP	1							
23	1	26106-060122	BOLT, M6X 12 PLATED	1							
24	1	26106-060162	BOLT, M6X 16 PLATED	4							
25	1	26106-060402	BOLT, M6X 40 PLATED	4							
26	1	26106-060402	BOLT, M6X 40 PLATED	3							
27	1	26106-060602	BOLT, M6X 60 PLATED	7							
28	1	26106-060652	BOLT, M6X 65 PLATED	2							
29	1	26306-080002	NUT, M8	3							
30	1	124160-01751	CAP, FILLER	1							
31	1	24311-000320	O-RING, 1AP32.0	1							

Remarks
(1)Optional parts.

N:Old ◄Yes/No► New. Q:Old ◄No/Yes► New. R:Old ◄Yes/Yes► New. S:Old ◄No/No► New. W:Add. Z:Discontinued. F:Interchangeable by set. K:Q'ty Change

Copyright (C) 2020 YANMAR GLOBAL CS CO., LTD. All RightsReserved.

Fig.3. FLYWHEEL HOUSING & OIL SUMP

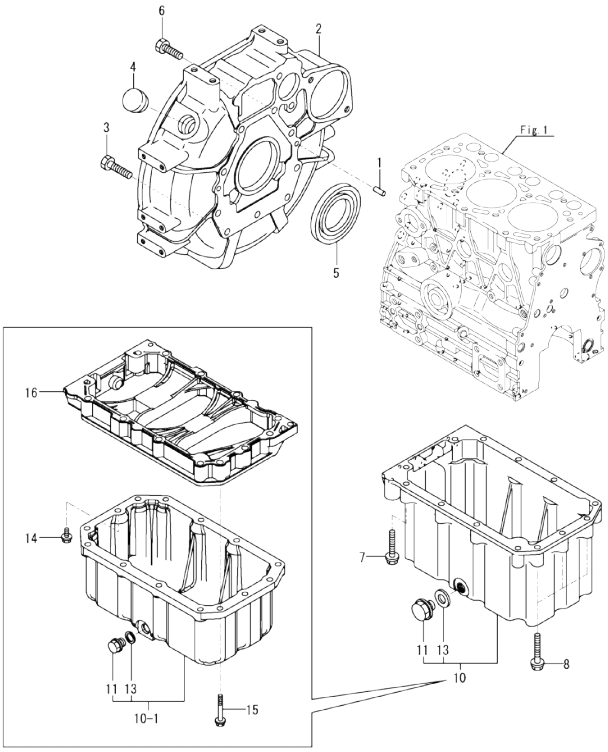

(A)=3TNV76-FDG (D)=
(B)= (E)=
(C)= (F)=

No.	Lev.	Parts No.	Description	Q'ty (A)	(B)	(C)	(D)	(E)	(F)	I	R
1	1	129100-01580	PIN, PARALLEL 8X16	2							
2	1	119717-01601	HOUSING, FLYWHEEL	1							
3	1	121120-01620	BOLT, M10X28	3							
3-1	1	26206-100302	BOLT, M10X 30 PLATED	3							R
	(A=E67434)										
4	1	119620-01750	CAP, WHEEL COVER	1							
5	1	124085-02220	SEAL, METAL HOUSING	1							
6	1	26206-100252	BOLT, M10X 25 PLATED	8							
7	1	26106-080452	BOLT, M8X 45 PLATED	10							
8	1	26106-080502	BOLT, M8X 50 PLATED	3							
10	1	119744-01770	OIL PAN ASSY	1							
10-1	1	119746-01790	OIL PAN ASSY	1						F	1
	(A=E30630)										
11	2	105425-01690	PLUG, DRAIN M16	1							
13	2	22190-160002	WASHER, SEAL 16	1							
14	1	26106-080252	BOLT, M8X 25 PLATED	1						W	
	(A=E30630)										
15	1	26106-080602	BOLT, M8X 60 PLATED	13						W	
	(A=E30630)										
16	1	119717-01720	SPACER, OIL PAN	1						W	
	(A=E30630)										

Remarks
(1)Interchangeable by simultaneous replacement with No.14, 15 & 16.

N:Old $\xleftarrow[\text{No}]{\text{Yes}}$ New. Q:Old $\xleftarrow[\text{Yes}]{\text{No}}$ New. R:Old $\xleftarrow[\text{Yes}]{\text{Yes}}$ New. S:Old $\xleftarrow[\text{No}]{\text{No}}$ New. W:Add. Z:Discontinued. F:Interchangeable by set. K:Q'ty Change

Copyright (C) 2020 YANMAR GLOBAL CS CO., LTD. All RightsReserved.

Fig.4. CYLINDER HEAD & BONNET

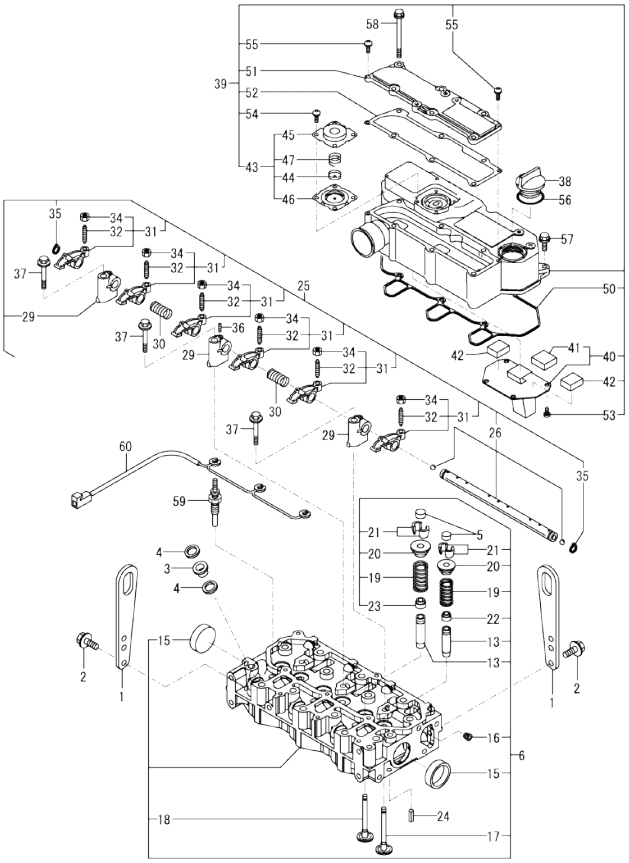

Remarks
(1)Spare parts.

(A)=3TNV76-FDG
(B)=
(C)=
(D)=
(E)=
(F)=

No.	Lev.	Parts No.	Description	Q'ty (A)	(B)	(C)	(D)	(E)	(F)	I	R
1	1	129900-07900	LIFTER, ENGINE	2							
2	1	26106-080162	BOLT, M8X 16 PLATED	4							
3	1	129901-11450	PROTECTOR, NOZZLE	3							
4	1	119600-11460	GASKET, NOZZLE	6							
5	1	105010-11490	CAP, VALVE	6							
6	1	119746-11740	HEAD ASSY, CYLINDER	1							
13	2	119717-11800	GUIDE, VALVE	6							1
15	2	119285-11990	PLUG, 35	2							
16	2	23876-005000	PLUG, R005	1							
17	2	119717-11100	VALVE, INTAKE	3							
17-1	2	119717-11101	VALVE, INTAKE	3							R
	(A=E32783)										
18	2	119717-11110	VALVE, EXHAUST	3							
19	2	119717-11131	SPRING, VALVE	6							
20	2	129508-11180	RETAINER, SPRING	6							
21	2	119717-11190	COTTER, VALVE	12							
22	2	119717-11340	SEAL, VALVE STEM	3							
23	2	119717-11350	SEAL, VALVE STEM	3							
24	1	22351-060012	PIN, SPRING 6.0X12	2							
25	1	119717-11200	SUPPORT ASSY, ROCKER	1							
26	2	119717-11240	SHAFT ASSY, ARM	1							
29	2	119717-11260	SUPPORT, ROCKER ARM	3							
30	2	119620-11280	SPRING, SHAFT	2							
31	2	119717-11650	ARM ASSY, ROCKER INT	6							
32	3	129150-11230	SCREW, VALVE ADJUST	6							
34	3	129150-11750	NUT, M8XP1.0	6							
35	2	22242-000120	RING, 12	2							
36	2	26979-050162	SCREW, M5X16	1							
36-1	2	119260-11270	SCREW	1							N
	(A=ES7484)										
37	1	26106-080402	BOLT, M8X 40 PLATED	3							
38	1	124160-01751	CAP, FILLER	1							
39	1	119717-11381	BONNET ASSY, HEAD	1							
40	2	119717-03031	PLATE, BAFFLE	1							
41	3	119717-03070	BAFFLE, BREATHER	1							
42	2	119717-03070	BAFFLE, BREATHER	2							
43	2	119802-03100	DIAPHRAGM ASSY	1							
44	3	119802-03110	PLATE, DIAPHRAGM	1							
45	3	119802-03121	COVER, DIAPHRAGM	1							
46	3	119802-03131	DIAPHRAGM, BREATHER	1							
47	3	119802-03141	SPRING, DIAPHRAGM	1							
50	2	119718-11310	GASKET, BONNET	1							
51	2	119717-11320	COVER, BONNET	1							
52	2	119717-11331	GASKET, BONNET COVER	1							
53	2	22857-500100	SCREW, 5X10	4							
54	2	22857-500100	SCREW, 5X10	4							
55	2	22857-500160	SCREW, 5X16	2							
56	1	24311-000320	O-RING, 1AP32.0	1							
57	1	26106-060202	BOLT, M6X 20 PLATED	3							
58	1	26106-060752	BOLT, M6X 75 PLATED	6							
59	1	119717-77800	PLUG, GLOW	3							

N:Old ←Yes/No→ New. Q:Old ←No/Yes→ New. R:Old ←Yes/Yes→ New. S:Old ←No/No→ New. W:Add. Z:Discontinued. F:Interchangeable by set. K:Q'ty Change

++ CONTINUE ++

Copyright (C) 2020 YANMAR GLOBAL CS CO., LTD. All RightsReserved.

Fig.4. CYLINDER HEAD & BONNET

(A)=3TNV76-FDG
(B)=
(C)=
(D)=
(E)=
(F)=

No.	Lev.	Parts No.	Description	Q'ty (A)	(B)	(C)	(D)	(E)	(F)	I	R
59-1	1	119717-77801	PLUG, GLOW	3						Q	
	(A=EB1962)										
60	1	119717-77820	CONNECTOR, GLOW PLUG	1							

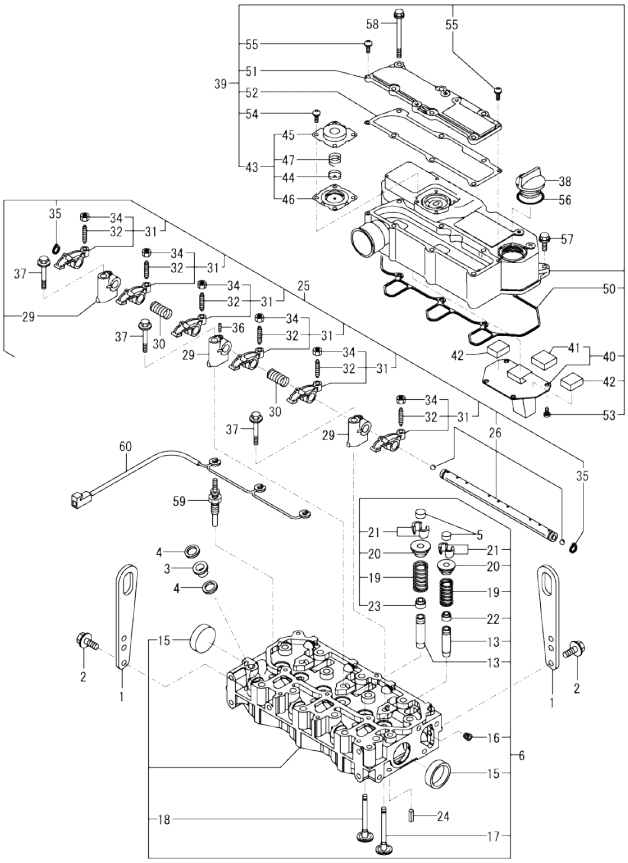

Remarks
(1)Spare parts.

N:Old ←Yes/No→ New. Q:Old ←No/Yes→ New. R:Old ←Yes/Yes→ New. S:Old ←No/No→ New. W:Add. Z:Discontinued. F:Interchangeable by set. K:Q'ty Change

Copyright (C) 2020 YANMAR GLOBAL CS CO., LTD. All RightsReserved.

Fig.5. EXHAUST MANIFOLD

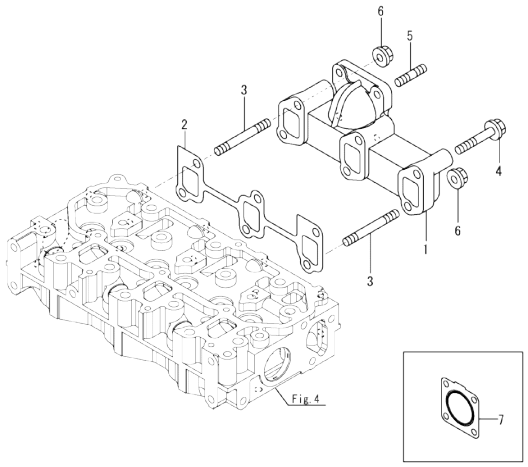

(A)=3TNV76-FDG
(B)=
(C)=
(D)=
(E)=
(F)=

No.	Lev.	Parts No.	Description	Q'ty (A)	(B)	(C)	(D)	(E)	(F)	I	R
1	1	119718-13100	MANIFOLD, EXHAUST	1							
2	1	119717-13110	GASKET, MANIFOLD	1							
3	1	119717-13600	STUD, M8X50	2							
4	1	119802-13620	BOLT, M8X50	4							
4-1	1	129E00-13610	BOLT, M8X50 10.9	4						N	
	(A=EG3208)										
5	1	119131-18320	STUD, M8X22	4							
6	1	26306-080002	NUT, M8	2							
7	1	119515-13200	GASKET, SILENCER	1							1

Remarks
(1)Loose parts.

N:Old ◄Yes/No► New. Q:Old ◄No/Yes► New. R:Old ◄Yes/Yes► New. S:Old ◄No/No► New. W:Add. Z:Discontinued. F:Interchangeable by set. K:Q'ty Change

Copyright (C) 2020 YANMAR GLOBAL CS CO., LTD. All RightsReserved.

Fig.6. CAMSHAFT & DRIVING GEAR

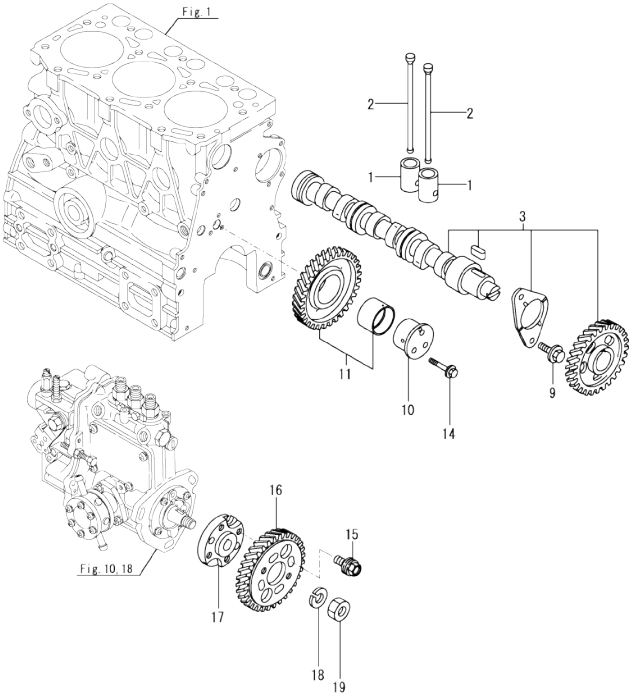

(A)=3TNV76-FDG (D)=
(B)= (E)=
(C)= (F)=

No.	Lev.	Parts No.	Description	Q'ty (A)	(B)	(C)	(D)	(E)	(F)	I	R
1	1	119620-14200	TAPPET	6							
2	1	119717-14400	ROD, PUSH	6							
3	1	119717-14580	CAMSHAFT ASSY	1							
3-1	1	119717-14581	CAMSHAFT ASSY	1							R
	(A=E25667)										
9	1	26106-060122	BOLT, M6X 12 PLATED	2							
10	1	119717-25050	SHAFT, IDLE GEAR	1							
11	1	119717-25100	GEAR ASSY, IDLE	1							
11-1	1	119717-25101	GEAR ASSY, IDLE	1							N
	(A=E30630)										
14	1	26106-060352	BOLT, M6X 35 PLATED	3							
15	1	129150-25301	BOLT, INJECTION PUMP	4							
16	1	119717-25930	GEAR, PUMP	1							
17	1	119717-51150	FLANGE, CAMSHAFT	1							
18	1	22217-120000	WASHER, SPRING 12	1							
19	1	26716-120002	NUT, M12	1							

N:Old ←Yes/No→ New. Q:Old ←No/Yes→ New. R:Old ←Yes/Yes→ New. S:Old ←No/No→ New. W:Add. Z:Discontinued. F:Interchangeable by set. K:Q'ty Change

Copyright (C) 2020 YANMAR GLOBAL CS CO., LTD. All RightsReserved.

Fig.7. CRANKSHAFT & PISTON

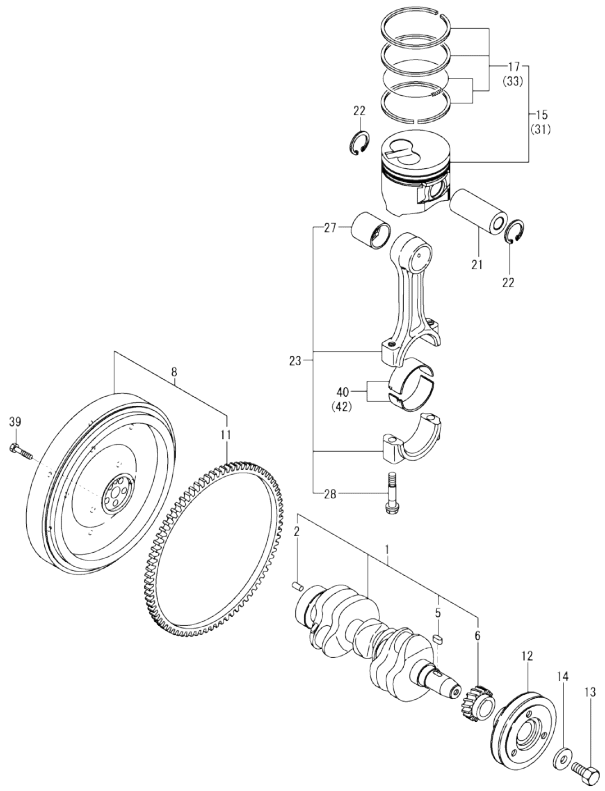

(A)=3TNV76-FDG
(B)=
(C)=
(D)=
(E)=
(F)=

No.	Lev.	Parts No.	Description	Q'ty (A)	(B)	(C)	(D)	(E)	(F)	I	R
1	1	119717-21700	CRANKSHAFT ASSY	1							
2	2	129100-01580	PIN, PARALLEL 8X16	1							
5	2	22512-040120	KEY, 4X 12	1							
6	2	119717-21200	GEAR, CRANKSHAFT	1							
8	1	119546-21590	FLYWHEEL ASSY	1							
11	2	119865-21600	GEAR, RING Z=116	1							
12	1	119717-21650	V-PULLEY, CRANKSHAFT	1							
13	1	119621-21680	BOLT, FLANGE 12X1.25	1							
13-1	1	119621-21681	BOLT, FLANGE 12X1.25	1							R
	(A=E69321)										
14	1	119620-21941	WASHER, 12	1							
15	1	119717-22080	PISTON ASSY	3							
17	2	119717-22500	RING SET, PISTON	3							
21	1	119717-22300	PIN, PISTON	3							
22	1	22252-000220	RING, 22	6							
23	1	119717-23000	ROD ASSY, CONNECTING	3							
23-1	1	119717-23001	ROD ASSY, CONNECTING	3						N	
	(A=EQ6890)										
27	2	119717-23910	METAL, PISTON PIN	3							2
27-1	2	119717-23911	BUSH, PISTON PIN	2						N	2
	(A=EQ6890)										
28	2	119717-23200	BOLT, CONNECTING ROD	6							
31	1	119717-22090	PISTON ASSY, 0.25 OS	3							1
33	2	119717-22550	RING SET, PISTON .25	3							1
39	1	121111-21501	BOLT, FLYWHEEL	5							
40	1	119717-23601	METAL ASSY,CRANK PIN	3							
42	1	119717-23611	METAL ASSY, PIN .25	3							3

Remarks
(1)Over-sized(O.S.=0.25) parts.
(2)Spare parts.
(3)Under-sized(U.S.=0.25) parts.

N:Old $\frac{\text{Yes}}{\text{No}}$ New. Q:Old $\frac{\text{No}}{\text{Yes}}$ New. R:Old $\frac{\text{Yes}}{\text{Yes}}$ New. S:Old $\frac{\text{No}}{\text{No}}$ New. W:Add. Z:Discontinued. F:Interchangeable by set. K:Q'ty Change

Copyright (C) 2020 YANMAR GLOBAL CS CO., LTD. All RightsReserved.

Fig.8. LUB. OIL SYSTEM

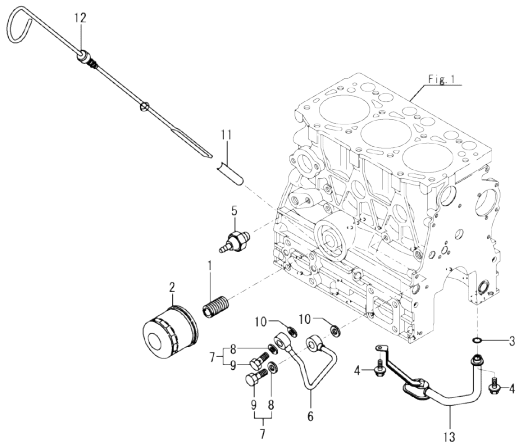

(A)=3TNV76-FDG
(B)=
(C)=
(D)=
(E)=
(F)=

No.	Lev.	Parts No.	Description	Q'ty (A)	(B)	(C)	(D)	(E)	(F)	I	R
1	1	129100-35140	STUD	1							
1-1	1	119717-35140	STUD	1						N	
	(A=E75071)										
2	1	119305-35151	FILTER ASSY, D68XL65	1							1
3	1	119717-32060	O-RING, P15.0	1							
4	1	26106-060102	BOLT, M6X 10 PLATED	2							
5	1	114250-39450	SWITCH, HYDRAULIC	1							
6	1	119717-39210	PIPE, PUMP	1							
7	1	129005-59830	BOLT ASSY, JOINT M8	2							
8	2	22190-080002	WASHER, SEAL 8	2							
9	2	23857-030000	BOLT, JOINT 3	2							
10	1	22190-080002	WASHER, SEAL 8	2							
11	1	121520-34810	GUIDE, DIPSTICK	1							
12	1	119746-34801	DIPSTICK, OIL	1							
13	1	119744-35080	PIPE ASSY, OIL INLET	1							

Remarks
(1)Spare parts.

N:Old $\frac{\text{Yes}}{\text{No}}$ New. Q:Old $\frac{\text{No}}{\text{Yes}}$ New. R:Old $\frac{\text{Yes}}{\text{Yes}}$ New. S:Old $\frac{\text{No}}{\text{No}}$ New. W:Add. Z:Discontinued. F:Interchangeable by set. K:Q'ty Change

Copyright (C) 2020 YANMAR GLOBAL CS CO., LTD. All RightsReserved.

Fig.9. COOLING WATER SYSTEM

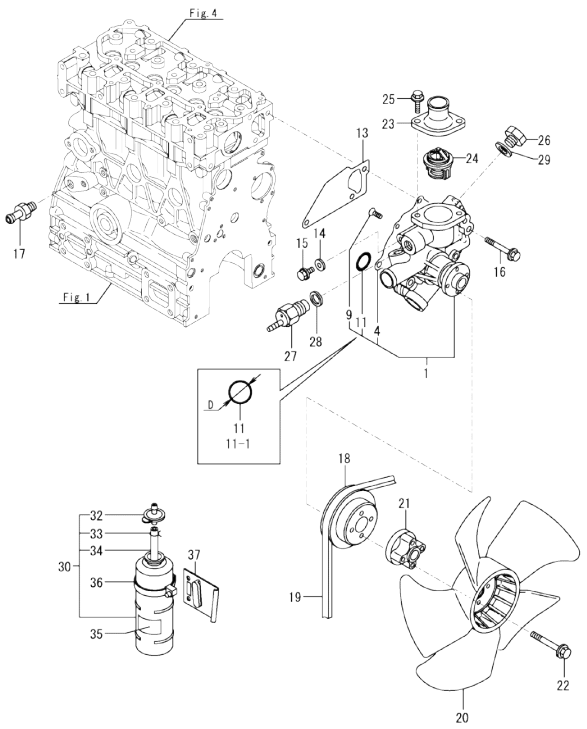

(A)=3TNV76-FDG (D)=
(B)= (E)=
(C)= (F)=

No.	Lev.	Parts No.	Description	Q'ty (A)	(B)	(C)	(D)	(E)	(F)	I	R
1	1	119717-42002	PUMP ASSY, WATER	1							
1-1	1	119E10-42000	PUMP ASSY, WATER	1						N	
	(A=E/ B0670)										
1-2	1	119E10-42001	PUMP ASSY, CW	1						N	
	(A=ER6293)										
4	2	119717-42031	GASKET, WATER PUMP	1							
9	2	26577-060122	SCREW, M6X12	4							
11	2	119717-42320	O-RING, P26	1							
11-1	2	119C10-42320	O-RING, 2028	1						S	1
	(A=E/ B0670)										
13	1	119717-42020	GASKET, WATER PUMP	1							
14	1	23414-080000	GASKET, 8X1.0	1							
15	1	26106-080122	BOLT, M8X 12 PLATED	1							
16	1	26106-080502	BOLT, M8X 50 PLATED	3							
17	1	121550-49111	JOINT, PT1/4	1							
18	1	119515-42350	V-PULLEY, PUMP D110	1							
19	1	129612-42310	V-BELT, A36.5	1							
20	1	119233-44740	FAN, COOLING D290XUH	1							
21	1	129457-44760	SPACER, FAN	1							
22	1	26106-060452	BOLT, M6X 45 PLATED	4							
23	1	129350-49530	COVER, THERMOSTAT	1							
24	1	119717-49800	THERMOSTAT, 71C	1							
25	1	26106-080202	BOLT, M8X 20 PLATED	2							
26	1	121450-42450	PLUG, M16	1							
27	1	121250-44901	SWITCH, TEMPERATURE	1							
28	1	124465-44950	GASKET, 16	1							
29	1	124465-44950	GASKET, 16	1							
30	1	124450-44510	TANK ASSY, SUB	1							
32	2	124450-44530	CAP, SUB TANK	1							
33	2	124450-44560	CLAMP, PIPE	1							
34	2	23061-070230	PIPE, 7X 230	1							
35	1	121470-44540	LABEL, SUB TANK	1							
36	1	124450-44550	BAND, SUB TANK	1							
37	1	121256-44600	BRACKET, SUB TANK	1							

Remarks
(1)D=No.11 : 26mm, No.11-1 : 28.25mm.

N:Old $\frac{\text{Yes}}{\text{No}}$ New. Q:Old $\frac{\text{No}}{\text{Yes}}$ New. R:Old $\frac{\text{Yes}}{\text{Yes}}$ New. S:Old $\frac{\text{No}}{\text{No}}$ New. W:Add. Z:Discontinued. F:Interchangeable by set. K:Q'ty Change

Copyright (C) 2020 YANMAR GLOBAL CS CO., LTD. All RightsReserved.

Fig.10. FUEL INJECTION PUMP

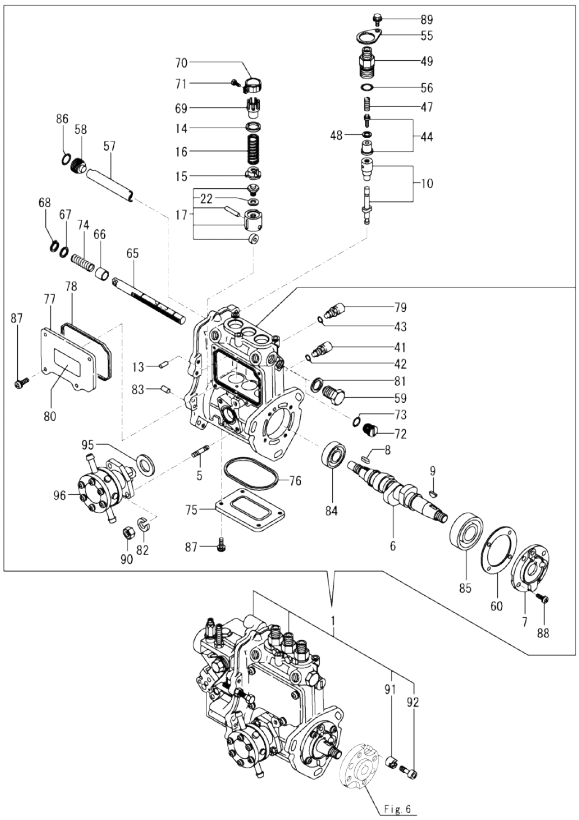

Remarks
(1)Governor(Fig.11) is incorporated in this Fuel Injection Pump(No.1).
* This item is applicable to [(A)=ER6292] or previous machines.

(A)=3TNV76-FDG (D)=
(B)= (E)=
(C)= (F)=

No.	Lev.	Parts No.	Description	Q'ty (A)	(B)	(C)	(D)	(E)	(F)	I	R
1	1	719746-51380	PUMP ASSY, INJECTION	1							1
5	2	129155-51020	STUD	2							
6	2	119717-51030	CAMSHAFT, PUMP	1							
7	2	119717-51060	SUPPORT, CAMSHAFT	1							
8	2	119717-51070	KEY, PARALLEL	1							
9	2	122710-51090	KEY, FEATHER	1							
10	2	119717-51100	PLUNGER ASSY	3							
13	2	129155-51140	PIN, BARREL LOCK	3							
14	2	158600-51170	RETAINER, SPRING	3							
15	2	119717-51180	RETAINER, SPRING	3							
16	2	119717-51190	SPRING, PLUNGER	3							
17	2	119717-51200	TAPPET ASSY, ROLLER	3							
22	3	129155-51600	SHIM SET, ADJUSTING	1							
41	2	158600-51270	STOPPER, TAPPET	3							
42	2	129155-51280	O-RING, S6	3							
43	2	129155-51280	O-RING, S6	1							
44	2	119717-51300	VALVE ASSY, DELIVERY	3							
47	2	119717-51330	SPRING, DELIVERY	3							
48	2	124550-51350	GASKET, DELIVERY	3							
49	2	158600-51441	VALVE ASSY, DELIVERY	3							
55	2	118400-51370	PLATE, LOCK	3							
56	2	24316-000150	O-RING, 4DP15.0	3							
57	2	129155-51400	PROTECTOR	1							
58	2	158600-51410	PLUG, DEFLIFTER M12	1							
59	2	158600-51420	PLUG, DEFLIFTER M16	1							
60	2	129155-51450	SHIM SET, ADJUSTING	1							
65	2	119717-51500	RACK, CONTROL	1							
66	2	129155-51521	BUSH, RACK	1							
67	2	129155-51530	SPACER, SPRING	1							
68	2	129155-51540	CIRCLIP, C	1							
69	2	129155-51550	PINION, CONTROL	3							
70	2	129100-51560	PINION	3							
71	2	129100-51570	SCREW, PINION M4	3							
72	2	158600-51570	PLUG, RACK	1							
73	2	129155-51580	O-RING	1							
74	2	129155-51591	SPRING, RACK ASSIST	1							
75	2	129155-51701	COVER, PUMP BOTTOM	1							
76	2	119717-51710	GASKET	1							
77	2	119717-51750	COVER, BODY SIDE	1							
78	2	119717-51760	GASKET	1							
79	2	158600-51790	STOPPER, RACK	1							
80	2	129156-51910	LABEL, FIE CAUTION	1							
81	2	22190-160002	WASHER, SEAL 16	1							
82	2	22217-060000	WASHER, SPRING 6	2							
83	2	22351-050010	PIN, SPRING 5.0X10	2							
84	2	24101-060034	BEARING, BALL 6003	1							
85	2	24101-063034	BEARING, BALL 6303	1							
86	2	119717-51420	O-RING	1							
87	2	26022-050122	SCREW, M5X12	8							
88	2	26022-060162	SCREW, M6X16	4							
89	2	26106-050102	BOLT, M5X 10 PLATED	3							

N:Old ←Yes/No→ New. Q:Old ←No/Yes→ New. R:Old ←Yes/Yes→ New. S:Old ←No/No→ New. W:Add. Z:Discontinued. F:Interchangeable by set. K:Q'ty Change

++ CONTINUE ++

Copyright (C) 2020 YANMAR GLOBAL CS CO., LTD. All RightsReserved.

Fig.10. FUEL INJECTION PUMP

(A)=3TNV76-FDG (D)=
(B)= (E)=
(C)= (F)=

No.	Lev.	Parts No.	Description	Q'ty (A)	(B)	(C)	(D)	(E)	(F)	I	R
90	2	26716-060002	NUT, M6	2							
91	2	119717-51480	COLLAR	1							
92	2	119717-51490	BOLT	1							
95	2	129155-52051	GASKET, PUMP COVER	1							
96	2	129100-52101	PUMP ASSY, FUEL FEED	1							

Remarks
(1)Governor(Fig.11) is incorporated in this Fuel Injection Pump(No.1).
* This item is applicable to [(A)=ER6292] or previous machines.

N:Old ←Yes/No→ New. Q:Old ←No/Yes→ New, R:Old ←Yes/Yes→ New. S:Old ←No/No→ New. W:Add. Z:Discontinued. F:Interchangeable by set. K:Q'ty Change

Copyright (C) 2020 YANMAR GLOBAL CS CO., LTD. All RightsReserved.

Fig.18. (10A)FUEL INJECTION PUMP

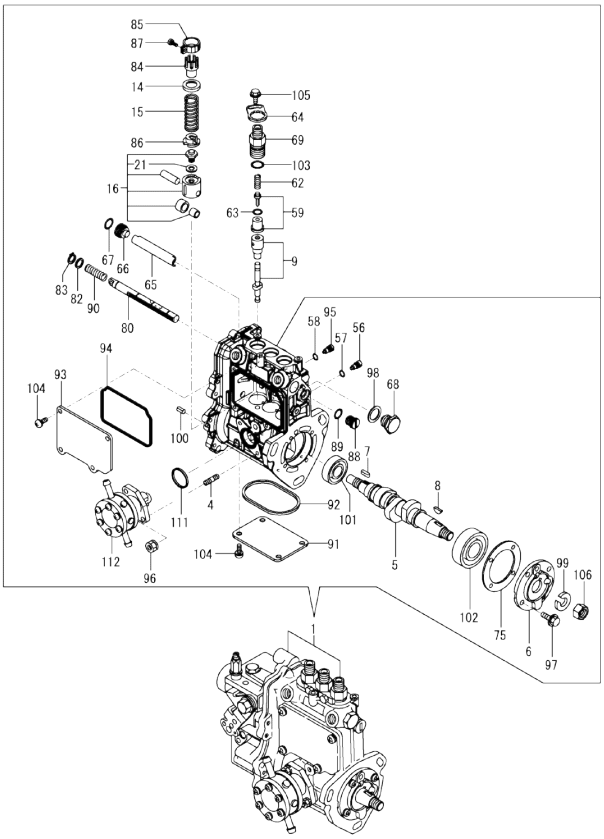

No.	Lev.	Parts No.	Description	Q'ty (A)	(B)	(C)	(D)	(E)	(F)	I	R
1	1	719746-51380	PUMP ASSY, INJECTION	1							1
4	2	129155-51020	STUD	2							
5	2	119717-51030	CAMSHAFT, PUMP	1							
6	2	119717-51060	SUPPORT, CAMSHAFT	1							
7	2	119717-51070	KEY, PARALLEL	1							
8	2	122710-51090	KEY, FEATHER	1							
9	2	119717-51100	PLUNGER ASSY	3							
14	2	158600-51170	RETAINER, SPRING	3							
15	2	119717-51190	SPRING, PLUNGER	3							
16	2	119717-51201	TAPPET ASSY, ROLLER	3							
21	3	129155-51600	SHIM SET, ADJUSTING	3							
56	2	158600-51270	STOPPER, TAPPET	3							
57	2	129155-51280	O-RING, S6	3							
58	2	129155-51280	O-RING, S6	1							
59	2	119515-51300	VALVE ASSY, DELIVERY	3							
62	2	119717-51330	SPRING, DELIVERY	3							
63	2	124550-51350	GASKET, DELIVERY	3							
64	2	119125-51370	RETAINER, HOLDER	3							
65	2	129155-51400	PROTECTOR	1							
66	2	158600-51410	PLUG, DEFLIFTER M12	1							
67	2	119717-51420	O-RING	1							
68	2	158600-51420	PLUG, DEFLIFTER M16	1							
69	2	158600-51442	VALVE ASSY, DELIVERY	3							
75	2	129155-51450	SHIM SET, ADJUSTING	1							
80	2	119717-51500	RACK, CONTROL	1							
82	2	129155-51530	SPACER, SPRING	1							
83	2	129155-51540	CIRCLIP, C	1							
84	2	129155-51550	PINION, CONTROL	3							
85	2	129100-51560	PINION	3							
86	2	119717-51570	RETAINER, SPRING	3							
87	2	129100-51570	SCREW, PINION M4	3							
88	2	158600-51570	PLUG, RACK	1							
89	2	129155-51580	O-RING	1							
90	2	129155-51591	SPRING, RACK ASSIST	1							
91	2	129155-51701	COVER, PUMP BOTTOM	1							
92	2	119717-51711	GASKET, PUMP	1							
93	2	119717-51750	COVER, BODY SIDE	1							
94	2	119717-51761	GASKET, PUMP COVER	1							
95	2	158600-51790	STOPPER, RACK	1							
96	2	119717-51860	NUT, M6	2							
97	2	119125-51900	BOLT, M6X14	4							
98	2	22190-160002	WASHER, SEAL 16	1							
99	2	22217-120000	WASHER, SPRING 12	1							
100	2	22351-050010	PIN, SPRING 5.0X10	2							
101	2	24101-060034	BEARING, BALL 6003	1							
102	2	24101-063034	BEARING, BALL 6303	1							
103	2	24316-000150	O-RING, 4DP15.0	3							
104	2	26022-050122	SCREW, M5X12	8							
105	2	26106-050102	BOLT, M5X 10 PLATED	3							
106	2	26716-120002	NUT, M12	1							
111	2	129155-52051	GASKET, PUMP COVER	1							

(A)=3TNV76-FDG (D)=
(B)= (E)=
(C)= (F)=

Remarks
(1)Governor(Fig.19) is incorporated in this Fuel Injection Pump(No.1).
* This item is applicable to [(A)=ER6293] or following machines.

N:Old ←Yes/No→ New. Q:Old ←No/Yes→ New. R:Old ←Yes/Yes→ New. S:Old ←No/No→ New. W:Add. Z:Discontinued. F:Interchangeable by set. K:Q'ty Change

++ CONTINUE ++

Copyright (C) 2020 YANMAR GLOBAL CS CO., LTD. All RightsReserved.

Fig.18. (10A)FUEL INJECTION PUMP

(A)=3TNV76-FDG
(B)=
(C)=
(D)=
(E)=
(F)=

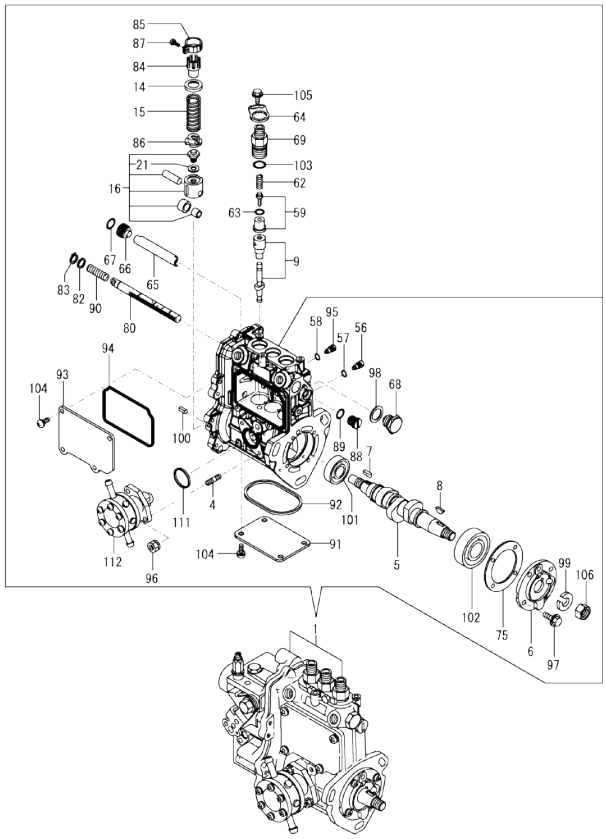

No.	Lev.	Parts No.	Description	Q'ty (A)	(B)	(C)	(D)	(E)	(F)	I	R
112	2	129100-52101	PUMP ASSY, FUEL FEED	1							

Remarks
(1)Governor(Fig.19) is incorporated in this Fuel Injection Pump(No.1).
* This item is applicable to [(A)=ER6293] or following machines.

N:Old ←Yes/No→ New. Q:Old ←No/Yes→ New. R:Old ←Yes/Yes→ New. S:Old ←No/No→ New. W:Add. Z:Discontinued. F:Interchangeable by set. K:Q'ty Change

Copyright (C) 2020 YANMAR GLOBAL CS CO., LTD. All RightsReserved.

Fig.11. GOVERNOR

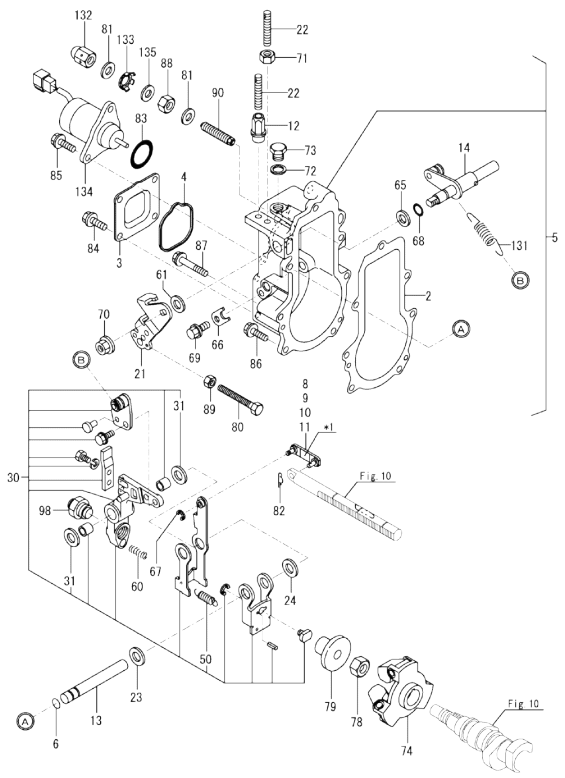

Remarks
* This figure(Governor) is incorporated in the Fuel Injection Pump(Fig.10).
(1)Selective parts, mark : 3 (2)Selective parts, mark : 98 (3)Selective parts, mark : 88
(4)Selective parts, mark : 03
* This item is applicable to [(A)=ER6292] or previous machines.

(A)=3TNV76-FDG (D)=
(B)= (E)=
(C)= (F)=

No.	Lev.	Parts No.	Description	Q'ty (A)	(B)	(C)	(D)	(E)	(F)	I	R
2	2	119717-61050	GASKET, CASE	1							
3	2	119717-61060	COVER, GOVERNOR CASE	1							
4	2	119717-61070	GASKET, COVER	1							
5	2	119742-61100	CASE ASSY, GOVERNOR	1							
6	3	129155-51280	O-RING, S6	1							
8	3	119717-61120	LINK, L=29.3 MARK 3	1							1
9	3	119717-61130	LINK, L=29.8 MARK 98	1							2
10	3	119717-61140	LINK, L=28.8 MARK 88	1							3
11	3	119717-61150	LINK, L=30.3 MARK 03	1							4
12	3	129209-61370	NUT, ARB M6	1							
13	3	129052-61390	SHAFT,GOVERNOR LEVER	1							
14	3	119717-61400	SHAFT ASSY, LEVER	1							
21	3	119515-61440	LEVER, CONTROL	1							
22	3	129155-61450	BOLT, LIMITER	2							
23	3	129156-61460	SHIM, LEVER T=0.6	1							
24	3	129155-61480	SPACER ASSY, LEVER	1							
30	3	119717-61500	LEVER ASSY, GOVERNOR	1							
31	4	174307-51700	SHIM SET, PLUNGER	2							
50	4	129486-61540	SPRING, LEVER	1							
60	3	129100-61650	SPRING, FUEL LIMITER	1							
61	3	158552-61700	SHIM SET	1							
65	3	158552-61710	SHIM, T=1.0	1							
66	3	119660-61901	STOPPER, SHAFT	1							
67	3	22272-000030	RING, E- 3	1							
68	3	24341-000070	O-RING, 1AS7.0	1							
69	3	26106-060102	BOLT, M6X 10 PLATED	1							
70	3	26366-080002	NUT, M8	1							
71	3	26756-060002	NUT, LOCK M6	1							
72	2	22190-100002	WASHER, SEAL 10	1							
73	2	23887-100002	PLUG, 10	1							
74	2	119717-61200	WEIGHT ASSY,GOVERNOR	1							
78	2	119660-61300	NUT, SUPPORT	1							
79	2	129155-61341	SLEEVE	1							
80	2	129155-61460	BOLT, IDLE LIMIT	1							
81	2	22190-120002	WASHER, SEAL 12	2							
82	2	22372-040000	PIN, SNAP 4	1							
83	2	24341-000280	O-RING, 1AS28.0	1							
83-1	2 (A=E23876)	158552-61900	O-RING	1							N
84	2	26106-060102	BOLT, M6X 10 PLATED	4							
85	2	26106-060142	BOLT, M6X 14 PLATED	2							
86	2	26106-060202	BOLT, M6X 20 PLATED	4							
87	2	26106-060452	BOLT, M6X 45 PLATED	3							
88	2	26736-120002	NUT, M12	1							
89	2	26756-060002	NUT, LOCK M6	1							
90	2	158601-61700	LIMITER ASSY, FUEL	1							
98	2	119761-61560	ANGLEICH ASSY	1							
131	2	129573-61700	SPRING, GOVERNOR	1							
132	2	129209-61930	NUT	1							
133	2	129209-61970	PLATE	1							
134	2	119233-77932	SOLENOID, STOP	1							

N:Old ←Yes/No→ New. Q:Old ←No/Yes→ New. R:Old ←Yes/Yes→ New. S:Old ←No/No→ New. W:Add. Z:Discontinued. F:Interchangeable by set. K:Q'ty Change

++ CONTINUE ++

Copyright (C) 2020 YANMAR GLOBAL CS CO., LTD. All RightsReserved.

Fig.11. GOVERNOR

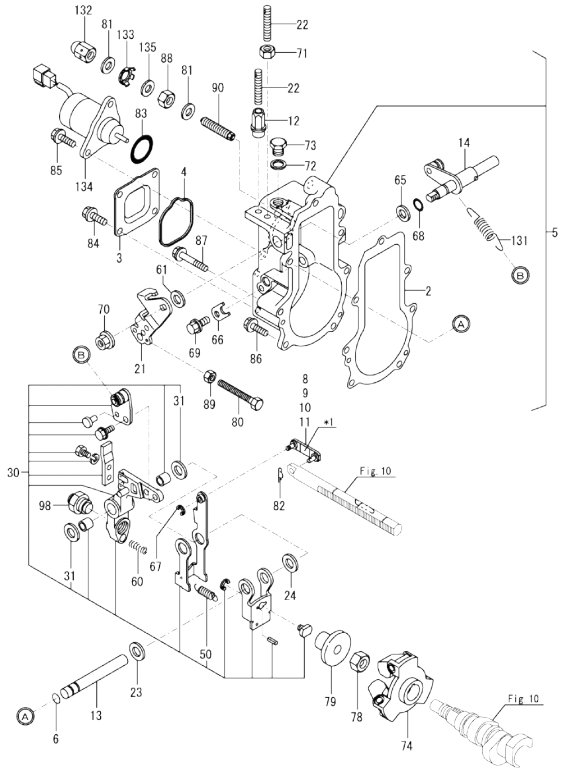

Remarks
* This figure(Governor) is incorporated in the Fuel Injection Pump(Fig.10).
(1)Selective parts, mark : 3 (2)Selective parts, mark : 98 (3)Selective parts, mark : 88
(4)Selective parts, mark : 03
* This item is applicable to [(A)=ER6292] or previous machines.

(A)=3TNV76-FDG (D)=
(B)= (E)=
(C)= (F)=

No.	Lev.	Parts No.	Description	Q'ty (A)	(B)	(C)	(D)	(E)	(F)	I	R
135	2	23414-120016	GASKET, 12X1.0	1							

N:Old ←Yes/No→ New. Q:Old ←No/Yes→ New. R:Old ←Yes/Yes→ New. S:Old ←No/No→ New. W:Add. Z:Discontinued. F:Interchangeable by set. K:Q'ty Change

Copyright (C) 2020 YANMAR GLOBAL CS CO., LTD. All RightsReserved.

Fig.19. (11A)GOVERNOR

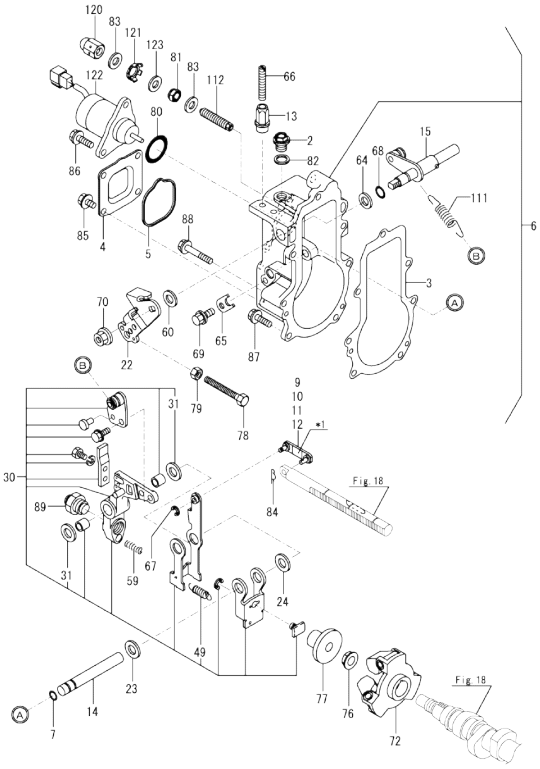

Remarks
* This figure(Governor) is incorporated in the Fuel Injection Pump(Fig.18).
*1.Classified mark.
(1)Selective parts, mark : 3 (2)Selective parts, mark : 98 (3)Selective parts, mark : 88
(4)Selective parts, mark : 03
* This item is applicable to [(A)=ER6293] or following machines.

(A)=3TNV76-FDG
(B)=
(C)=
(D)=
(E)=
(F)=

No.	Lev.	Parts No.	Description	Q'ty (A)	(B)	(C)	(D)	(E)	(F)	I	R
2	2	119717-51930	PLUG, M10	1							
3	2	119717-61050	GASKET, CASE	1							
4	2	119717-61060	COVER, GOVERNOR CASE	1							
5	2	119717-61070	GASKET, COVER	1							
6	2	119546-61200	CASE ASSY, GOVERNOR	1							
7	3	129155-51280	O-RING, S6	1							
9	3	119717-61120	LINK, L=29.3 MARK 3	1							1
10	3	119717-61130	LINK, L=29.8 MARK 98	1							2
11	3	119717-61140	LINK, L=28.8 MARK 88	1							3
12	3	119717-61150	LINK, L=30.3 MARK 03	1							4
13	3	129209-61370	NUT, ARB M6	1							
14	3	129052-61390	SHAFT,GOVERNOR LEVER	1							
15	3	119717-61400	SHAFT ASSY, LEVER	1							
22	3	119415-61440	LEVER, CONTROL	1							
23	3	129156-61460	SHIM, LEVER T=0.6	1							
24	3	129155-61480	SPACER ASSY, LEVER	1							
30	3	119717-61500	LEVER ASSY, GOVERNOR	1							
31	4	174307-51700	SHIM SET, PLUNGER	2							
49	4	129486-61540	SPRING, LEVER	1							
59	3	129100-61650	SPRING, FUEL LIMITER	1							
60	3	158552-61700	SHIM SET	1							
64	3	158552-61710	SHIM, T=1.0	1							
65	3	119660-61901	STOPPER, SHAFT	1							
66	3	121575-66830	SCREW, ADJUSTER	2							
67	3	22272-000030	RING, E- 3	1							
68	3	24341-000070	O-RING, 1AS7.0	1							
69	3	26106-060102	BOLT, M6X 10 PLATED	1							
70	3	26366-080002	NUT, M8	1							
72	2	119717-61201	WEIGHT ASSY,GOVERNOR	1							
76	2	129008-61301	NUT, SUPPORT	1							
77	2	129155-61341	SLEEVE	1							
78	2	129155-61461	BOLT,IDLE LIMIT	1							
79	2	119740-61470	NUT	1							
80	2	158552-61900	O-RING	1							
81	2	129209-61920	NUT, ARB	1							
82	2	22190-100002	WASHER, SEAL 10	1							
83	2	22190-120002	WASHER, SEAL 12	2							
84	2	22372-040000	PIN, SNAP 4	1							
85	2	26106-060102	BOLT, M6X 10 PLATED	4							
86	2	26106-060142	BOLT, M6X 14 PLATED	2							
87	2	26106-060202	BOLT, M6X 20 PLATED	4							
88	2	26106-060452	BOLT, M6X 45 PLATED	3							
89	2	119761-61560	ANGLEICH ASSY	1							
111	2	129573-61700	SPRING, GOVERNOR	1							
112	2	158601-61700	LIMITER ASSY, FUEL	1							
120	2	129209-61930	NUT	1							
121	2	129209-61970	PLATE	1							
122	2	119233-77932	SOLENOID, STOP	1							
123	2	23414-120016	GASKET, 12X1.0	1							

N:Old ←Yes/No→ New. Q:Old ←No/Yes→ New, R:Old ←Yes/Yes→ New, S:Old ←No/No→ New. W:Add. Z:Discontinued. F:Interchangeable by set. K:Q'ty Change

Copyright (C) 2020 YANMAR GLOBAL CS CO., LTD. All RightsReserved.

Fig.12. FUEL INJECTION VALVE

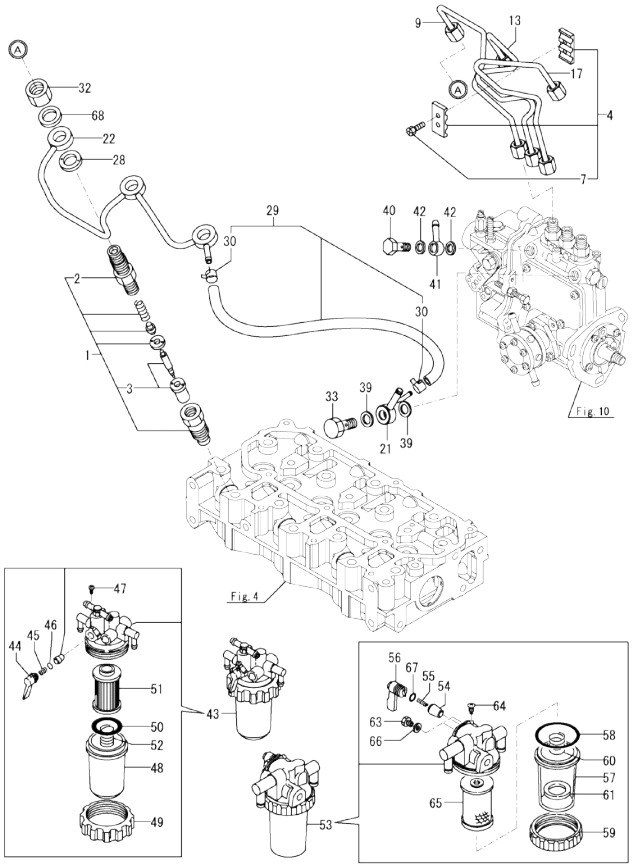

(A)=3TNV76-FDG
(B)=
(C)=
(D)=
(E)=
(F)=

No.	Lev.	Parts No.	Description	Q'ty (A)	(B)	(C)	(D)	(E)	(F)	I	R
1	1	119515-53001	VALVE ASSY,INJECTION	3							
2	2	118200-53010	HOLDER, NOZZLE	3							
3	2	119515-53010	VALVE ASSY,INJECTION	3							
4	1	129150-59120	RETAINER, PIPE	1							
7	2	129150-59131	BOLT, M4X14	2							
9	1	119746-59810	PIPE, INJECTION NO.1	1							
13	1	119746-59820	PIPE, INJECTION NO.2	1							
17	1	119746-59830	PIPE, INJECTION NO.3	1							
21	1	119840-59570	JOINT, OVERFLOW	1							
22	1	119717-59510	PIPE ASSY, RETURN	1							
28	1	129901-59560	GASKET, FUEL RETURN	3							
29	1	119540-59570	HOSE ASSY, RETURN	1							
30	2	124066-59100	CLAMP, HOSE 8	2							
32	1	119620-59700	NUT, NOZZLE RETURN	3							
33	1	119813-59950	VALVE ASSY, CHECK	1							
39	1	22190-120002	WASHER, SEAL 12	2							
40	1	103854-39140	BOLT, PIPE JOINT	1							
41	1	101304-59020	JOINT, PIPE 12	1							
42	1	22190-120002	WASHER, SEAL 12	2							
43	1	119833-55620	FILTER ASSY, FUEL	1							
44	2	119810-55340	LEVER, FUEL	1							
45	2	104200-55330	SPRING, FUEL VALVE	1							
46	2	24311-240100	O-RING, 1AP10A	1							
47	2	104200-55750	SCREW, M4	1							
48	2	121254-55510	CUP, FUEL STARINER	1							
49	2	110250-55610	RING, CUP RETAINING	1							
50	2	102103-55520	O-RING, FILTER	1							
51	2	119810-55650	ELEMENT, FUEL FILTER	1							
52	2	121250-55620	SPRING, ELEMENT	1							
53	1	129335-55700	SEPARATOR ASSY,WATER	1							
54	2	104200-55321	VALVE, TAPER	1							
55	2	104200-55330	SPRING, FUEL VALVE	1							
56	2	104200-55341	HANDLE, COCK	1							
57	2	124064-55510	CUP, FUEL STARINER	1							
58	2	102103-55520	O-RING, FILTER	1							
59	2	110250-55610	RING, CUP RETAINING	1							
60	2	121257-55720	SPRING, ELEMENT	1							
61	2	121257-55731	FLOAT	1							
63	2	101720-55750	PLUG, HEXAGON M6	2							
64	2	104200-55750	SCREW, M4	1							
65	2	171081-55910	FILTER, FUEL 100M	1							
66	2	23418-060000	GASKET, 6X1.0	2							
67	2	24311-240100	O-RING, 1AP10A	1							
68	1	22190-120002	WASHER, SEAL 12	3							

Remarks
* This item is applicable to [(A)=E85482] or previous machines.

N:Old ◄Yes/No► New. Q:Old ◄No/Yes► New. R:Old ◄Yes/Yes► New. S:Old ◄No/No► New. W:Add. Z:Discontinued. F:Interchangeable by set. K:Q'ty Change

Copyright (C) 2020 YANMAR GLOBAL CS CO., LTD. All RightsReserved.

Fig.17. (12A)FUEL INJECTION VALVE

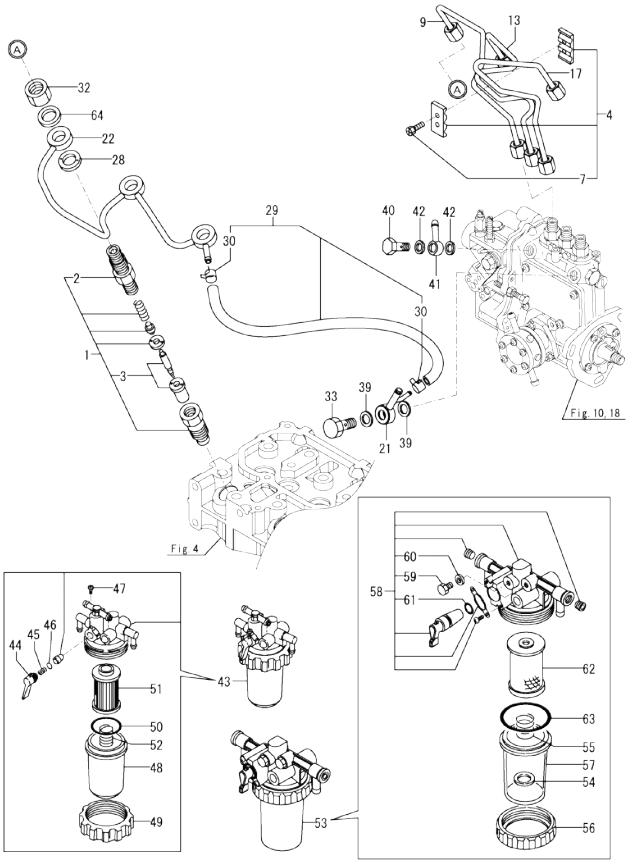

(A)=3TNV76-FDG
(B)=
(C)=
(D)=
(E)=
(F)=

No.	Lev.	Parts No.	Description	Q'ty (A)	(B)	(C)	(D)	(E)	(F)	I	R
1	1	119515-53001	VALVE ASSY,INJECTION	3							
2	2	118200-53010	HOLDER, NOZZLE	3							
3	2	119515-53010	VALVE ASSY,INJECTION	3							
4	1	129150-59120	RETAINER, PIPE	1							
7	2	129150-59131	BOLT, M4X14	2							
9	1	119746-59810	PIPE, INJECTION NO.1	1							
13	1	119746-59820	PIPE, INJECTION NO.2	1							
17	1	119746-59830	PIPE, INJECTION NO.3	1							
21	1	119840-59570	JOINT, OVERFLOW	1							
22	1	119717-59510	PIPE ASSY, RETURN	1							
28	1	129901-59560	GASKET, FUEL RETURN	3							
29	1	119540-59570	HOSE ASSY, RETURN	1							
30	2	124066-59100	CLAMP, HOSE 8	2							
32	1	119620-59700	NUT, NOZZLE RETURN	3							
33	1	119813-59950	VALVE ASSY, CHECK	1							
39	1	22190-120002	WASHER, SEAL 12	2							
40	1	103854-39140	BOLT, PIPE JOINT	1							
41	1	101304-59020	JOINT, PIPE 12	1							
42	1	22190-120002	WASHER, SEAL 12	2							
43	1	119833-55620	FILTER ASSY, FUEL	1							
44	2	119810-55340	LEVER, FUEL	1							
45	2	104200-55330	SPRING, FUEL VALVE	1							
46	2	24311-240100	O-RING, 1AP10A	1							
47	2	104200-55750	SCREW, M4	1							
48	2	121254-55510	CUP, FUEL STARINER	1							
49	2	110250-55610	RING, CUP RETAINING	1							
50	2	102103-55520	O-RING, FILTER	1							
51	2	119810-55650	ELEMENT, FUEL FILTER	1							
52	2	121250-55620	SPRING, ELEMENT	1							
53	1	129335-55750	SEPARATOR ASSY,WATER	1							
54	2	129053-55640	FLOAT	1							
55	2	129053-55650	SPRING, SCREEN	1							
56	2	119833-55660	RING, RETAINING	1							
57	2	129335-55740	CUP	1							
58	2	129335-55770	BODY ASSY	1							
59	3	129242-55750	VALVE, AIR VENT	2							
60	3	129242-55760	GASKET, PLUG	2							
61	3	24311-000110	O-RING, 1AP11.0	1							
62	2	129335-55780	ELEMENT ASSY, FUEL	1							
63	2	24311-000440	O-RING, 1AP44.0	1							
64	1	22190-120002	WASHER, SEAL 12	3							

Remarks
* This figure is applies from Machine No.E85483 to Machine No.EE5121.

N:Old ◄Yes/No► New. Q:Old ◄No/Yes► New. R:Old ◄Yes/Yes► New. S:Old ◄No/No► New. W:Add. Z:Discontinued. F:Interchangeable by set. K:Q'ty Change

Copyright (C) 2020 YANMAR GLOBAL CS CO., LTD. All RightsReserved.

Fig.20. (12B)FUEL INJECTION VALVE

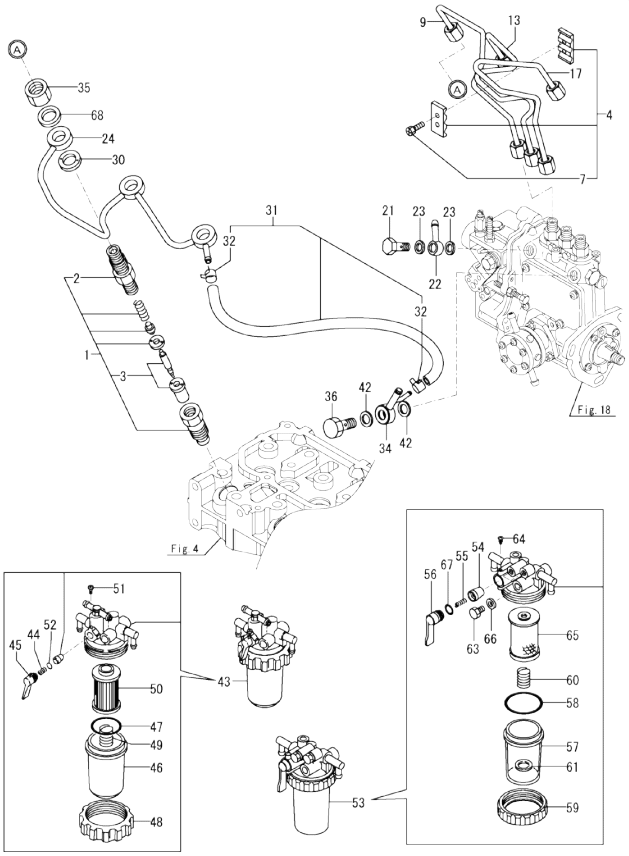

(A)=3TNV76-FDG
(B)=
(C)=
(D)=
(E)=
(F)=

No.	Lev.	Parts No.	Description	Q'ty (A)	(B)	(C)	(D)	(E)	(F)	I	R
1	1	119515-53001	VALVE ASSY,INJECTION	3							
2	2	118200-53010	HOLDER, NOZZLE	3							
3	2	119515-53010	VALVE ASSY,INJECTION	3							
4	1	129150-59120	RETAINER, PIPE	1							
7	2	129150-59131	BOLT, M4X14	2							
9	1	119746-59810	PIPE, INJECTION NO.1	1							
13	1	119746-59820	PIPE, INJECTION NO.2	1							
17	1	119746-59830	PIPE, INJECTION NO.3	1							
21	1	103854-39140	BOLT, PIPE JOINT	1							
22	1	101304-59020	JOINT, PIPE 12	1							
23	1	22190-120002	WASHER, SEAL 12	2							
24	1	119717-59510	PIPE ASSY, RETURN	1							
30	1	129901-59560	GASKET, FUEL RETURN	3							
31	1	119540-59570	HOSE ASSY, RETURN	1							
32	2	124066-59100	CLAMP, HOSE 8	2							
34	1	119840-59570	JOINT, OVERFLOW	1							
35	1	119620-59700	NUT, NOZZLE RETURN	3							
36	1	119813-59950	VALVE ASSY, CHECK	1							
42	1	22190-120002	WASHER, SEAL 12	2							
43	1	119833-55621	FILTER ASSY, FUEL	1							
44	2	104200-55330	SPRING, FUEL VALVE	1							
45	2	119810-55340	LEVER, FUEL	1							
46	2	121254-55510	CUP, FUEL STARINER	1							
47	2	102103-55520	O-RING, FILTER	1							
48	2	110250-55610	RING, CUP RETAINING	1							
49	2	121250-55620	SPRING, ELEMENT	1							
50	2	119810-55650	ELEMENT, FUEL FILTER	1							
51	2	104200-55750	SCREW, M4	1							
52	2	24311-240100	O-RING, 1AP10A	1							
53	1	129335-55701	SEPARATOR ASSY,WATER	1							
54	2	104200-55321	VALVE, TAPER	1							
55	2	104200-55330	SPRING, FUEL VALVE	1							
56	2	104200-55341	HANDLE, COCK	1							
57	2	124064-55510	CUP, FUEL STARINER	1							
58	2	102103-55520	O-RING, FILTER	1							
59	2	110250-55610	RING, CUP RETAINING	1							
60	2	121257-55720	SPRING, ELEMENT	1							
61	2	121257-55731	FLOAT	1							
63	2	101720-55750	PLUG, HEXAGON M6	2							
64	2	104200-55750	SCREW, M4	1							
65	2	171081-55910	FILTER, FUEL 100M	1							
66	2	23418-060000	GASKET, 6X1.0	2							
67	2	24311-240100	O-RING, 1AP10A	1							
68	1	22190-120002	WASHER, SEAL 12	3							

Remarks
* This item is applicable to [(A)=EE5122] or following machines.

N:Old ←Yes/No→ New. Q:Old ←No/Yes→ New. R:Old ←Yes/Yes→ New. S:Old ←No/No→ New. W:Add. Z:Discontinued. F:Interchangeable by set. K:Q'ty Change

Copyright (C) 2020 YANMAR GLOBAL CS CO., LTD. All RightsReserved.

Fig.13. STARTER MOTOR

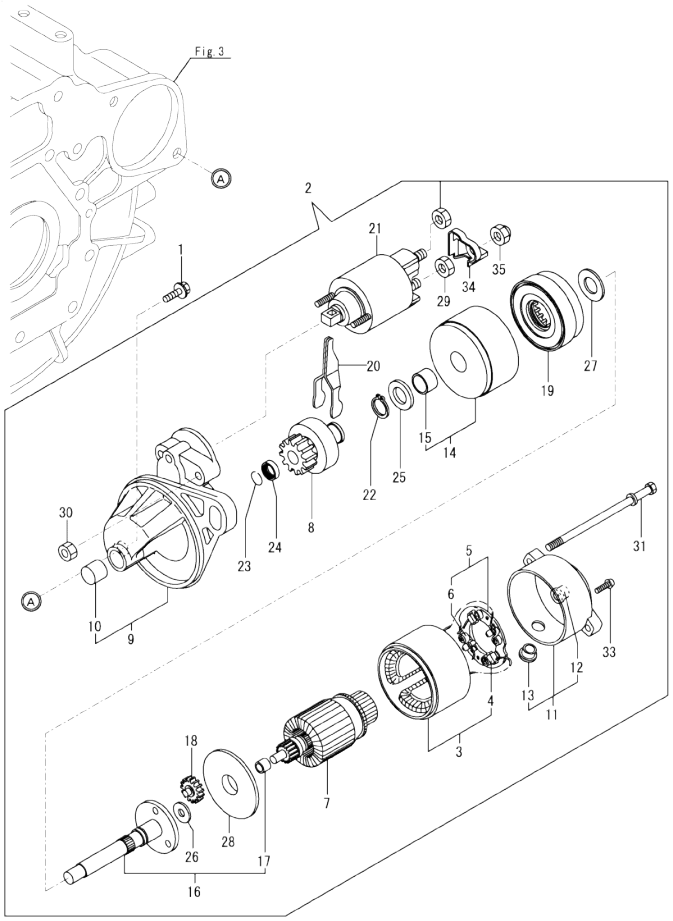

0CD10-M85201 Fig.13

(A)=3TNV76-FDG (D)=
(B)= (E)=
(C)= (F)=

No.	Lev.	Parts No.	Description	Q'ty (A)	(B)	(C)	(D)	(E)	(F)	I	R
1	1	26106-100252	BOLT, M10X 25 PLATED	2							
2	1	119717-77010	STARTER, P1.1	1							
3	2	X0281007750	YOKE ASSY	1							
4	3	X0280996180	STARTER KIT	2							
5	2	X0285105190	HOLDER ASSY	1							
6	3	X0285205030	SPRING	4							
7	2	X0282005991	ARMATURE ASSY	1							
8	2	X0283006960	CLUTCH	1							
9	2	X4284001590	HOUSING ASSY	1							
10	3	X9491050100	BEARING, NEEDLE	1							
11	2	X0285007030	FRAME ASSY	1							
12	3	X9491040990	BEARING	1							
13	3	X0280626010	COVER	1							
14	2	X0284105040	BEARING ASSY, SUB	1							
15	3	X9491034330	BEARING	1							
16	2	X0286105010	SHAFT ASSY, SUB	1							
17	3	X9491034320	BEARING	1							
18	2	X0286305010	GEAR	3							
19	2	X0286355010	GEAR	1							
20	2	X0287405140	LEVER	1							
21	2	X0534007800	SWITCH ASSY	1							
22	2	X9055715000	RING	1							
23	2	X9490721360	RING	1							
24	2	X0280210331	NUT	1							
25	2	X9490138110	WASHER	1							
26	2	X9490138090	WASHER	1							
27	2	X9490138100	WASHER	1							
28	2	X0284525010	PLATE	1							
29	2	X9490562360	NUT	1							
30	2	X9490560750	NUT	2							
31	2	X9490423420	BOLT, THROUGH	2							
33	2	X9490065670	SCREW, M4X6	2							
34	2	X0280335350	COVER, TERMINAL	1							
35	2	X1289510130	NUT	1							

N:Old ←Yes/No→ New. Q:Old ←No/Yes→ New. R:Old ←Yes/Yes→ New. S:Old ←No/No→ New. W:Add. Z:Discontinued. F:Interchangeable by set. K:Q'ty Change

Copyright (C) 2020 YANMAR GLOBAL CS CO., LTD. All RightsReserved.

Fig.14. GENERATOR

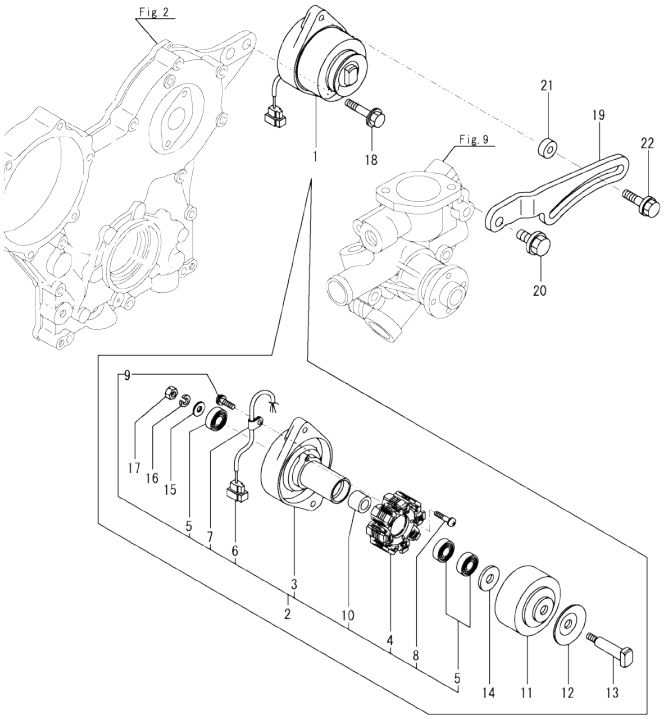

(A)=3TNV76-FDG (D)=
(B)= (E)=
(C)= (F)=

No.	Lev.	Parts No.	Description	Q'ty (A)	(B)	(C)	(D)	(E)	(F)	I	R
1	1	171301-77201	DYNAMO ASSY, 15A	1							
2	2	XM08137	PLATE ASSY	1							
3	3	X2A07073KA	PLATE	1							
4	3	X4A07023KB	STATOR ASSY	1							
5	3	24104-062010	BEARING, 6201UUC3	3							
6	3	X417878	COUPLER	1							
7	3	XM069000000	CLAMP	1							
8	3	XYSPS402400	SCREW	2							
9	3	XYSPS400800	SCREW	1							
10	3	XM329830000	COLLAR	1							
11	2	X3A08877KA	FLYWHEEL	1							
12	2	XM721740000	PULLEY	1							
13	2	X4A07403K01	SHAFT	1							
14	2	XM67935	WASHER	1							
15	2	XM860250000	WASHER, 10	1							
16	2	XM219230000	WASHER, SPRING	1							
17	2	XM863720000	NUT	1							
18	1	26106-100402	BOLT, M10X 40 PLATED	1							
18-1	1	26106-100452	BOLT, M10X 45 PLATED	1						N	
	(A=E15536)										
19	1	119742-77300	ADJUSTER, BELT	1							
20	1	26106-080202	BOLT, M8X 20 PLATED	1							
21	1	119940-77270	SPACER, GENERATOR	1							
22	1	129972-77341	BOLT, ADJUSTER L=50	1							

N:Old ◄Yes/No► New. Q:Old ◄No/Yes► New, R:Old ◄Yes/Yes► New, S:Old ◄No/No► New. W:Add. Z:Discontinued. F:Interchangeable by set. K:Q'ty Change

Copyright (C) 2020 YANMAR GLOBAL CS CO., LTD. All RightsReserved.

Fig.15. ELECTRIC PARTS

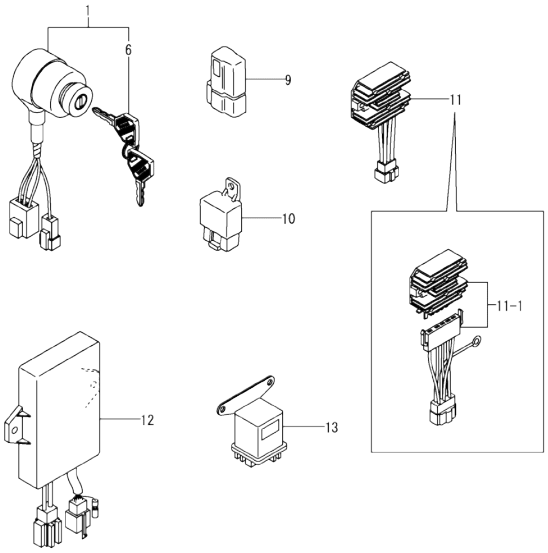

(A)=3TNV76-FDG (D)=
(B)= (E)=
(C)= (F)=

No.	Lev.	Parts No.	Description	Q'ty (A)	(B)	(C)	(D)	(E)	(F)	I	R
1	1	194940-52110	SWITCH, STARTING	1							
1-1	1	194940-52111	SWITCH ASSY, STARTER	1						N	
	(A=*2018.09)										
1-2	1	129902-77500	SWITCH ASSY, STARTER	1						N	
	(A=ET5716)										
6	2	198360-52160	KEY ASSY, SPARE	1							
9	1	119643-66900	DIODE	2							
10	1	119247-77100	RELAY, POWER SN2213	1							
11	1	119865-77700	CURRENT LIMITER ASSY	1							
11-1	1	119865-77701	LIMITER, CURRENT 20A	1						S	
	(A=E65241)										
12	1	119546-77800	RELAY, EMERGENCY	1							
12-1	1	119128-77801	CONTROLLER ASSY	1						N	
	(A=EE0179)										
13	1	119650-77910	RELAY ASSY, GLOW	1							
13-1	1	119650-77911	RELAY ASSY, GLOW	1						N	
	(A=E88577)										

N:Old ◄Yes/No► New. Q:Old ◄No/Yes► New. R:Old ◄Yes/Yes► New. S:Old ◄No/No► New. W:Add. Z:Discontinued. F:Interchangeable by set. K:Q'ty Change

Copyright (C) 2020 YANMAR GLOBAL CS CO., LTD. All RightsReserved.

Fig.16. GASKET SET

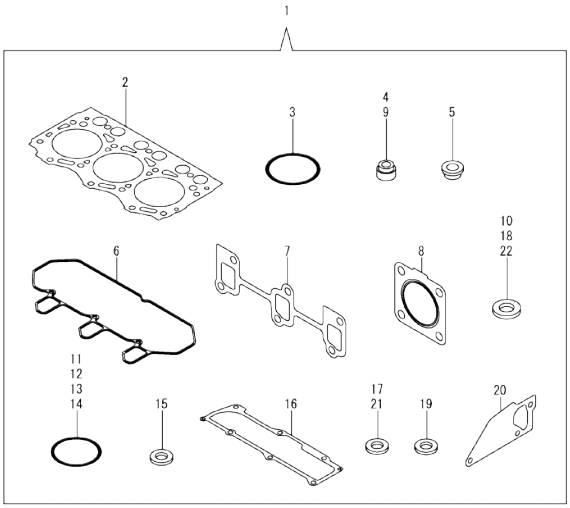

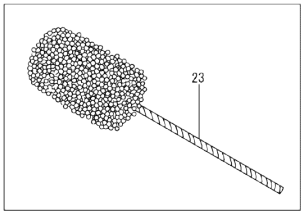

(A)=3TNV76-FDG
(B)=
(C)=
(D)=
(E)=
(F)=

No.	Lev.	Parts No.	Description	Q'ty (A)	(B)	(C)	(D)	(E)	(F)	I	R
1	1	719717-92670	GASKET SET	1							1
2	2	119717-01330	GASKET, HEAD	1							
3	2	121850-51960	O-RING, FUEL PUMP	1							
4	2	119717-11340	SEAL, VALVE STEM	3							
5	2	129901-11450	PROTECTOR, NOZZLE	3							
6	2	119718-11310	GASKET, BONNET	1							
7	2	119717-13110	GASKET, MANIFOLD	1							
8	2	119515-13200	GASKET, SILENCER	1							
9	2	119717-11350	SEAL, VALVE STEM	3							
10	2	22190-080002	WASHER, SEAL 8	4							
11	2	24311-000320	O-RING, 1AP32.0	2							
12	2	119717-32060	O-RING, P15.0	1							
13	2	119624-32040	O-RING, P12.0	1							
14	2	119717-32050	O-RING, P17.0	3							
15	2	119600-11460	GASKET, NOZZLE	6							
16	2	119717-11331	GASKET, BONNET COVER	1							
17	2	124465-44950	GASKET, 16	2							
18	2	22190-120002	WASHER, SEAL 12	4							
19	2	129901-59560	GASKET, FUEL RETURN	3							
20	2	119717-42020	GASKET, WATER PUMP	1							
21	2	23414-080000	GASKET, 8X1.0	1							
22	2	22190-160002	WASHER, SEAL 16	1							
23	1	129400-92420	HONE, FLEX	1							1

Remarks
(1)Optional parts.

N:Old ←Yes/No→ New. Q:Old ←No/Yes→ New. R:Old ←Yes/Yes→ New. S:Old ←No/No→ New. W:Add. Z:Discontinued. F:Interchangeable by set. K:Q'ty Change

Copyright (C) 2020 YANMAR GLOBAL CS CO., LTD. All RightsReserved.

Parts No. Index

Parts No.	Fig. No.	Ref. No.
101304-59020	12	41
	17	41
	20	22
101720-55750	12	63
	20	63
102103-55520	12	50
		58
	17	50
	20	47
		58
103854-39140	12	40
	17	40
	20	21
104200-55321	12	54
	20	54
104200-55330	12	45
		55
	17	45
	20	44
		55
104200-55341	12	56
	20	56
104200-55750	12	47
		64
	17	47
	20	51
		64
105010-11490	4	5
105311-01090	1	6
105425-01690	3	11
110250-55610	12	49
		59
	17	49
	20	48
		59
114250-39450	8	5
118200-53010	12	2
	17	2
	20	2
118400-51370	10	55
119125-51370	18	64
119125-51900	18	97
119128-77801	15	12 -1
119131-18320	5	5
119233-44740	9	20
119233-77932	11	134
	19	122
119247-77100	15	10
119260-11270	4	36 -1
119285-01990	1	9

Parts No.	Fig. No.	Ref. No.
119285-11990	4	15
119305-35151	8	2
119415-61440	19	22
119515-13200	5	7
	16	8
119515-42350	9	18
119515-51300	18	59
119515-53001	12	1
	17	1
	20	1
119515-53010	12	3
	17	3
	20	3
119515-61440	11	21
119540-59570	12	29
	17	29
	20	31
119546-21590	7	8
119546-61200	19	6
119546-77800	15	12
119600-11460	4	4
	16	15
119620-01750	3	4
119620-01800	2	8
119620-02020	1	10
119620-11280	4	30
119620-14200	6	1
119620-21941	7	14
119620-59700	12	32
	17	32
	20	35
119621-21680	7	13
119621-21681	7	13 -1
119623-01250	1	7
119624-32040	2	20
	16	13
119643-66900	15	9
119650-77910	15	13
119650-77911	15	13 -1
119660-01911	2	19
119660-61300	11	78
119660-61901	11	66
	19	65
119717-01330	1	31
	16	2
119717-01331	1	31 -1
119717-01501	2	1
119717-01521	2	6
119717-01570	2	3
119717-01590	2	4

Parts No.	Fig. No.	Ref. No.
119717-01601	3	2
119717-01720	3	16
119717-01750	2	18
119717-01800	2	8 -1
119717-02410	1	13
119717-02411	1	13 -1
119717-02930	1	27 -1
119717-03031	4	40
119717-03070	4	41
		42
119717-11100	4	17
119717-11101	4	17 -1
119717-11110	4	18
119717-11131	4	19
119717-11190	4	21
119717-11200	4	25
119717-11240	4	26
119717-11260	4	29
119717-11320	4	51
119717-11331	4	52
	16	16
119717-11340	4	22
	16	4
119717-11350	4	23
	16	9
119717-11381	4	39
119717-11650	4	31
119717-11800	4	13
119717-13110	5	2
	16	7
119717-13600	5	3
119717-14400	6	2
119717-14580	6	3
119717-14581	6	3 -1
119717-21200	7	6
119717-21650	7	12
119717-21700	7	1
119717-22080	7	15
119717-22090	7	31
119717-22300	7	21
119717-22500	7	17
119717-22550	7	33
119717-23000	7	23
119717-23001	7	23 -1
119717-23200	7	28
119717-23601	7	40
119717-23611	7	42
119717-23910	7	27
119717-23911	7	27 -1
119717-25050	6	10

Parts No.	Fig. No.	Ref. No.
119717-25100	6	11
119717-25101	6	11 -1
119717-25930	6	16
119717-32050	2	21
	16	14
119717-32060	8	3
	16	12
119717-32080	2	11
119717-32100	2	10
119717-32110	2	15
119717-32120	2	16
119717-35140	8	1 -1
119717-39210	8	6
119717-42002	9	1
119717-42020	9	13
	16	20
119717-42031	9	4
119717-42320	9	11
119717-49800	9	24
119717-51030	10	6
	18	5
119717-51060	10	7
	18	6
119717-51070	10	8
	18	7
119717-51100	10	10
	18	9
119717-51150	6	17
119717-51180	10	15
119717-51190	10	16
	18	15
119717-51200	10	17
119717-51201	18	16
119717-51300	10	44
119717-51330	10	47
	18	62
119717-51420	10	86
	18	67
119717-51480	10	91
119717-51490	10	92
119717-51500	10	65
	18	80
119717-51570	18	86
119717-51710	10	76
119717-51711	18	92
119717-51750	10	77
	18	93
119717-51760	10	78
119717-51761	18	94
119717-51860	18	96

Parts No. Index

Parts No.	Fig. No.	Ref. No.
119717-51930	19	2
119717-59510	12	22
	17	22
	20	24
119717-61050	11	2
	19	3
119717-61060	11	3
	19	4
119717-61070	11	4
	19	5
119717-61120	11	8
	19	9
119717-61130	11	9
	19	10
119717-61140	11	10
	19	11
119717-61150	11	11
	19	12
119717-61200	11	74
119717-61201	19	72
119717-61400	11	14
	19	15
119717-61500	11	30
	19	30
119717-77010	13	2
119717-77800	4	59
119717-77801	4	59 -1
119717-77820	4	60
119718-11310	4	50
	16	6
119718-13100	5	1
119734-01590	2	4 -1
119740-61470	19	79
119742-61100	11	5
119742-77300	14	19
119744-01770	3	10
119744-35080	8	13
119746-01790	3	10 -1
119746-11740	4	6
119746-34801	8	12
119746-59810	12	9
	17	9
	20	9
119746-59820	12	13
	17	13
	20	13
119746-59830	12	17
	17	17
	20	17
119761-61560	11	98

Parts No.	Fig. No.	Ref. No.
119761-61560	19	89
119802-03100	4	43
119802-03110	4	44
119802-03121	4	45
119802-03131	4	46
119802-03141	4	47
119802-13620	5	4
119802-32130	2	17
119810-01200	1	30
119810-02930	1	27
119810-02940	1	32
119810-02941	1	32 -1
119810-55340	12	44
	17	44
	20	45
119810-55650	12	51
	17	51
	20	50
119813-59950	12	33
	17	33
	20	36
119833-55620	12	43
	17	43
119833-55621	20	43
119833-55660	17	56
119840-59570	12	21
	17	21
	20	34
119865-21600	7	11
119865-77700	15	11
119865-77701	15	11 -1
119940-77270	14	21
119C10-42320	9	11 -1
119E10-42000	9	1 -1
119E10-42001	9	1 -2
121111-21501	7	39
121120-01620	3	3
121250-44901	9	27
121250-55620	12	52
	17	52
	20	49
121254-55510	12	48
	17	48
	20	46
121256-44600	9	37
121257-55720	12	60
	20	60
121257-55731	12	61
	20	61
121450-42450	9	26

Parts No.	Fig. No.	Ref. No.
121470-44540	9	35
121520-34810	8	11
121550-49111	9	17
121575-66830	19	66
121850-51960	2	22
	16	3
122710-51090	10	9
	18	8
124060-01050	1	38
124064-55510	12	57
	20	57
124066-59100	12	30
	17	30
	20	32
124085-02220	3	5
124160-01751	2	30
	4	38
124160-01910	1	39
124450-44510	9	30
124450-44530	9	32
124450-44550	9	36
124450-44560	9	33
124465-44950	9	28
		29
	16	17
124550-51350	10	48
	18	63
129001-32320	2	13
129001-32330	2	14
129005-59830	8	7
129008-61301	19	76
129052-61390	11	13
	19	14
129053-55640	17	54
129053-55650	17	55
129100-01580	3	1
	7	2
129100-35140	8	1
129100-51560	10	70
	18	85
129100-51570	10	71
	18	87
129100-52101	10	96
	18	112
129100-61650	11	60
	19	59
129150-11230	4	32
129150-11750	4	34
129150-25301	6	15
129150-59120	12	4

Parts No.	Fig. No.	Ref. No.
129150-59120	17	4
	20	4
129150-59131	12	7
	17	7
	20	7
129155-51020	10	5
	18	4
129155-51140	10	13
129155-51280	10	42
		43
	11	6
	18	57
		58
	19	7
129155-51400	10	57
	18	65
129155-51450	10	60
	18	75
129155-51521	10	66
129155-51530	10	67
	18	82
129155-51540	10	68
	18	83
129155-51550	10	69
	18	84
129155-51580	10	73
	18	89
129155-51591	10	74
	18	90
129155-51600	10	22
	18	21
129155-51701	10	75
	18	91
129155-52051	10	95
	18	111
129155-61341	11	79
	19	77
129155-61450	11	22
129155-61460	11	80
129155-61461	19	78
129155-61480	11	24
	19	24
129156-51910	10	80
129156-61460	11	23
	19	23
129209-61370	11	12
	19	13
129209-61920	19	81
129209-61930	11	132
	19	120

Parts No. Index

Parts No.	Fig. No.	Ref. No.
129209-61970	11	133
	19	121
129242-55750	17	59
129242-55760	17	60
129335-55700	12	53
129335-55701	20	53
129335-55740	17	57
129335-55750	17	53
129335-55770	17	58
129335-55780	17	62
129350-49530	9	23
129400-92420	16	23
129457-44760	9	21
129486-61540	11	50
	19	49
129508-11180	4	20
129573-61700	11	131
	19	111
129612-42310	9	19
129900-07900	4	1
129900-32130	2	12
129901-11450	4	3
	16	5
129901-59560	12	28
	16	19
	17	28
	20	30
129902-77500	15	1 -2
129972-77341	14	22
129E00-13610	5	4 -1
158552-61700	11	61
	19	60
158552-61710	11	65
	19	64
158552-61900	11	83 -1
	19	80
158600-51170	10	14
	18	14
158600-51270	10	41
	18	56
158600-51410	10	58
	18	66
158600-51420	10	59
	18	68
158600-51441	10	49
158600-51442	18	69
158600-51570	10	72
	18	88
158600-51790	10	79
	18	95

Parts No.	Fig. No.	Ref. No.
158601-61700	11	90
	19	112
171081-55910	12	65
	20	65
171301-77201	14	1
174307-51700	11	31
	19	31
194940-52110	15	1
194940-52111	15	1 -1
198360-52160	15	6
22190-080002	8	8
		10
	16	10
22190-100002	11	72
	19	82
22190-120002	11	81
	12	39
		42
		68
	16	18
	17	39
		42
		64
	19	83
	20	23
		42
		68
22190-160002	3	13
	10	81
	16	22
	18	98
22217-060000	10	82
22217-120000	6	18
	18	99
22242-000120	4	35
22252-000220	7	22
22272-000030	11	67
	19	67
22351-050010	10	83
	18	100
22351-060012	4	24
22372-040000	11	82
	19	84
22512-040120	7	5
22857-500100	4	53
		54
22857-500160	4	55
23061-070230	9	34
23414-080000	9	14
	16	21

Parts No.	Fig. No.	Ref. No.
23414-120016	11	135
	19	123
23418-060000	12	66
	20	66
23857-030000	8	9
23876-005000	4	16
23876-030000	2	6 A
23887-100002	11	73
24101-060034	10	84
	18	101
24101-063034	10	85
	18	102
24104-062010	14	5
24311-000110	17	61
24311-000320	2	31
	4	56
	16	11
24311-000440	17	63
24311-240100	12	46
		67
	17	46
	20	52
		67
24316-000150	10	56
	18	103
24341-000070	11	68
	19	68
24341-000280	11	83
26022-050122	10	87
	18	104
26022-060162	10	88
26106-050102	10	89
	18	105
26106-060102	8	4
	11	69
		84
	19	69
		85
26106-060122	2	23
	6	9
26106-060142	11	85
	19	86
26106-060162	2	24
26106-060202	4	57
	11	86
	19	87
26106-060352	6	14
26106-060402	2	25
		26
26106-060452	9	22

Parts No.	Fig. No.	Ref. No.
26106-060452	11	87
	19	88
26106-060602	2	27
26106-060652	2	28
26106-060752	4	58
26106-080122	9	15
26106-080162	4	2
26106-080202	9	25
	14	20
26106-080252	3	14
26106-080402	4	37
26106-080452	3	7
26106-080502	3	8
	9	16
26106-080602	3	15
26106-100252	13	1
26106-100402	14	18
26106-100452	14	18 -1
26206-100252	3	6
26206-100302	3	3 -1
26306-080002	2	29
	5	6
26366-080002	11	70
	19	70
26577-060122	9	9
26716-060002	10	90
26716-120002	6	19
	18	106
26736-120002	11	88
26756-060002	11	71
		89
26979-050162	4	36
27241-120000	1	40
719717-01500	2	5
719717-01561	1	1
719717-02900	1	15
719717-02910	1	35
719717-92670	16	1
719734-01500	2	5 -1
719746-51380	10	1
	18	1
X0280210331	13	24
X0280335350	13	34
X0280626010	13	13
X0280996180	13	4
X0281007750	13	3
X0282005991	13	7
X0283006960	13	8
X0284105040	13	14
X0284525010	13	28

Parts No. Index

Parts No.	Fig. No.	Ref. No.
X0285007030	13	11
X0285105190	13	5
X0285205030	13	6
X0286105010	13	16
X0286305010	13	18
X0286355010	13	19
X0287405140	13	20
X0534007800	13	21
X1289510130	13	35
X2A07073KA	14	3
X3A08877KA	14	11
X417878	14	6
X4284001590	13	9
X4A07023KB	14	4
X4A07403K01	14	13
X9055715000	13	22
X9490065670	13	33
X9490138090	13	26
X9490138100	13	27
X9490138110	13	25
X9490423420	13	31
X9490560750	13	30
X9490562360	13	29
X9490721360	13	23
X9491034320	13	17
X9491034330	13	15
X9491040990	13	12
X9491050100	13	10
XM069000000	14	7
XM08137	14	2
XM219230000	14	16
XM329830000	14	10
XM67935	14	14
XM721740000	14	12
XM860250000	14	15
XM863720000	14	17
XYSPS400800	14	9
XYSPS402400	14	8

Parts No.	Fig. No.	Ref. No.

Parts No.	Fig. No.	Ref. No.

Parts No.	Fig. No.	Ref. No.