YANMAR

PARTS CATALOG

0CW10-M73500EN

Last update Apr., 2016

PREFACE

1. This parts catalog is the 1st edition of 3TNV76-GGEA for EM POWER.

Pub.No. : 0CW10-G73500
Published : February, 2012

2. Model name

Engine model	Vehicle	Vehicle made by
3TNV76-GGEA	GENERATOR	EM POWER

Directions for the Parts Catalog.

1.This Parts Catalog shows both standard and optional parts.
2.Parts may change without prior notice.
3.The following is an example of the Parts Catalog format.

0CF10-G21601 29. FUEL INJECTION PUMP(W/BOOST)

(A)=4JH-DT
(B)=4JH-DTZ
(C)=4JH-DTZP
(D)=4JH-DTZA
(E)=4JH-DTZY
(F)=

① REF.	② LEV.	PARTS NO.	DESCRIPTION	Q'TY (A)	(B)	(C)	(D)	(E)	(F)	③ I	⑤ R
1	1	729595-51390	FUEL INJECTION PUMP	1	1	1	1	1			1
1-1	1	729595-51391	FUEL INJECTION PUMP	1	1	1	1	1		N	1
	(A=E00185)	(B=E00200)									
3	2	26022-060162	SCREW M 6X 16	9	9	9	9	9			
3-1 ④	2	26022-060162	SCREW M 6X 16	4	4	4	4	4		K	
	(A=E00156)	(B=E00156)	(C=E00156) (D=E00156)	(E=E00156)							
4	2	129470-51040	CAMSHAFT	1	1	1	1	1			
5	2	122710-51050	BEARING, ROLLER	2	2	2	2	2			
6	2	129470-51060	RETAINER	1	1	1	1	1			

Remarks
(1) BOOST COMPEMSATOR TYPE. OPTIONAL PART, TO E00155,(4JH-DT, 4JH-DTZ

①Ref. No.

The Ref. No. listed may not be in accordance with the illustration Ref. No.

(Ex.) Illustration No. 1 List Ref No. 1 (Before change) → 1- 1 (After change)

For interchangeable symbols N, R and K, illustrations for new parts may be abbreviated.

②Lev. (Level)

Level indication
The numbers below indicate the level of relativity towards the main part.
1 ----- Main parts (Assembly parts)
2 ----- Sub component included in " 1 ".
3 ----- Sub component included in " 2 ".
Note) Parts that are not for sale are partially illustrated but not listed.

③Interchangeability Symbol

When a part change takes place, one of the following interchangeability symbols is indicated beside the part.

Symbol	Interchangeability	Contents note
N	Old ← Yes / No → New	New Part is interchangeable for Old Part but Old Part is not interchangeable for New Part.
Q	Old ← No / Yes → New	New Part is not interchangeable for Old Part but Old Part is interchangeable for New Part.
R	Old ← Yes / Yes → New	New/ Old Parts are both interchangeable.
S	Old ← No / No → New	New/ Old Parts are both not interchangeable.
W		Part newly added.
Z		Part discontinued.
F		Not interchangeable by a single part but interchangeable together with related parts.
K		Changes only for used parts quantities.

④Effective Machine No.

When a part changes, the effective Machine No. will be indicated in the (A)-(F) column.

Product Symbol	Product No.	Product Symbol	Product No.
C	Clutch No. Compressor No.	F	Machine No. (Agricultural Equip.)
D	Drive No.	M	Machine No.
E	Engine No.		

Note 1) A date may follow the symbol. (Ex.) 1996.01
Note 2) " XXXXX " and " ZZZZZ " are for parts that could not be predicted or for engine models that could not be identified.
Note 3) (A=E00185) is the E (Engine Serial Number) for the column (A) model (in this case 4JH-DT) after the parts design change.

⑤Remarks

Figures or alphabets (symbols) are entered in the remarks column.
The comments (remarks) on parts that are indicated at the bottom of the illustration are the same symbols as those stated above.

Contents

0CW10-M73500

Fig. No.	Fig. Name
3TNV76-GGEA	
1.	CYLINDER BLOCK
2.	GEAR HOUSING
3.	FLYWHEEL HOUSING & OIL SUMP
4.	CYLINDER HEAD & BONNET
5.	AIR CLEANER
6.	EXHAUST MANIFOLD
7.	CAMSHAFT & DRIVING GEAR
8.	CRANKSHAFT & PISTON
9.	LUB. OIL SYSTEM
10.	COOLING WATER SYSTEM
11.	FUEL INJECTION PUMP
12.	GOVERNOR
13.	FUEL INJECTION VALVE
14.	FUEL LINE
15.	STARTING MOTOR
16.	GENERATOR
17.	GASKET SET

Fig. No.	Fig. Name

0CW10-M73500 3TNV76-GGEA

Fig.1. CYLINDER BLOCK

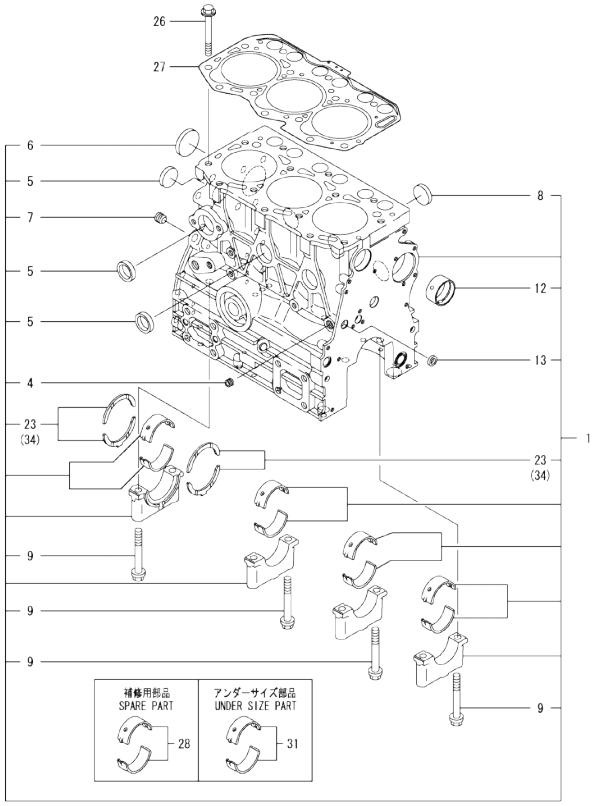

Remarks
(1)Spare part.
(2)Under-sized(U.S.=0.25)part.
(3)Over-sized(O.S.=0.25)part.

0CW10-M73500 Fig.1

(A)=3TNV76-GGEA (D)=
(B)= (E)=
(C)= (F)=

No.	Lev.	Parts No.	Description	Q'ty (A)	(B)	(C)	(D)	(E)	(F)	I	R
1	1	719717-01561	BLOCK ASSY, CYLINDER	1							
4	2	124060-01050	PLUG, PT1/8	1							
5	2	105311-01090	PLUG, 30	4							
6	2	119623-01250	PLUG, 45	1							
7	2	124160-01910	PLUG, PT1/4	1							
8	2	119285-01990	PLUG, 25	3							
9	2	119620-02020	BOLT, METAL CAP	8							
12	2	119717-02411	BUSH, CAMSHAFT	1							
13	2	27241-120000	PLUG, 12	1							
23	2	119717-02930	BEARING, THRUST	2							
26	1	119810-01200	BOLT, HEAD	14							
27	1	119717-01331	GASKET, HEAD	1							
28	1	719717-02901	BEARING, MAIN	4							1
31	1	719717-02911	BEARING, 0.25 US	4							2
34	1	119810-02941	BEARING, THRUST 0.25	2							3

N:Old ←Yes/No→ New. Q:Old ←No/Yes→ New. R:Old ←Yes/Yes→ New. S:Old ←No/No→ New. W:Add. Z:Discontinued. F:Interchangeable by set. K:Q'ty Change

Copyright (C) YANMAR CO., LTD. All RightsReserved.

Fig.2. GEAR HOUSING

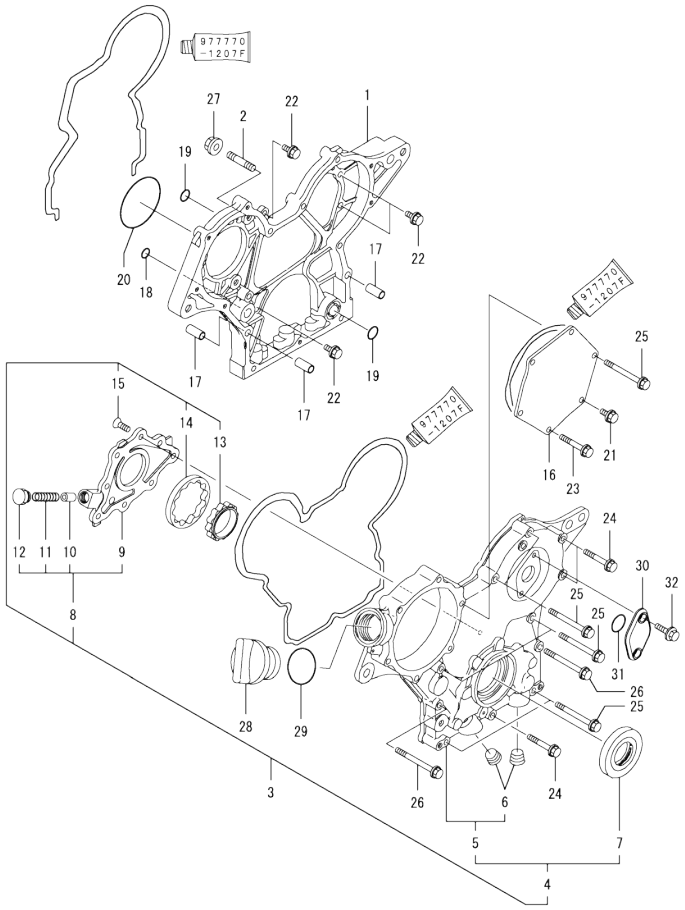

(A)=3TNV76-GGEA (D)=
(B)= (E)=
(C)= (F)=

No.	Lev.	Parts No.	Description	Q'ty (A)	(B)	(C)	(D)	(E)	(F)	I	R
1	1	119717-01501	CASE, GEAR	1							
2	1	119717-01570	STUD	3							
3	1	119734-01580	CASE ASSY, GEAR	1							
4	2	719734-01510	CASE ASSY, GEAR	1							
5	3	119744-01521	COVER, GEAR CASE	1							
6	4	23876-030000	PLUG, R03	2							
7	3	119717-01800	SEAL, OIL	1							
8	2	119717-32100	COVER ASSY	1							
9	3	119717-32080	COVER	1							
10	3	129900-32130	VALVE, RELIEF	1							
11	3	129001-32320	SPRING	1							
12	3	129001-32330	PLUG	1							
13	2	119717-32110	ROTOR, INNER	1							
14	2	119717-32120	ROTOR, OUTER	1							
15	2	119802-32130	SCREW, M6X16	8							
16	1	119717-01750	COVER	1							
17	1	119660-01911	PIPE, KNOCK	4							
18	1	119624-32040	O-RING, P12.0	1							
19	1	119717-32050	O-RING, P17.0	3							
20	1	121850-51960	O-RING	1							
21	1	26106-060122	BOLT, M6X 12 PLATED	1							
22	1	26106-060162	BOLT, M6X 16 PLATED	4							
23	1	26106-060402	BOLT, M6X 40 PLATED	4							
24	1	26106-060402	BOLT, M6X 40 PLATED	3							
25	1	26106-060602	BOLT, M6X 60 PLATED	7							
26	1	26106-060652	BOLT, M6X 65 PLATED	2							
27	1	26306-080002	NUT, M8	3							
28	1	124160-01751	COVER, FILLER	1							
29	1	24311-000320	O-RING, 1AP32.0	1							
30	1	121023-01551	COVER	1							
31	1	24341-000240	O-RING, 1AS24.0	1							
32	1	26106-060162	BOLT, M6X 16 PLATED	2							

N:Old ←Yes/No→ New. Q:Old ←No/Yes→ New. R:Old ←Yes/Yes→ New. S:Old ←No/No→ New. W:Add. Z:Discontinued. F:Interchangeable by set. K:Q'ty Change

Copyright (C) YANMAR CO., LTD. All RightsReserved.

Fig.3. FLYWHEEL HOUSING & OIL SUMP

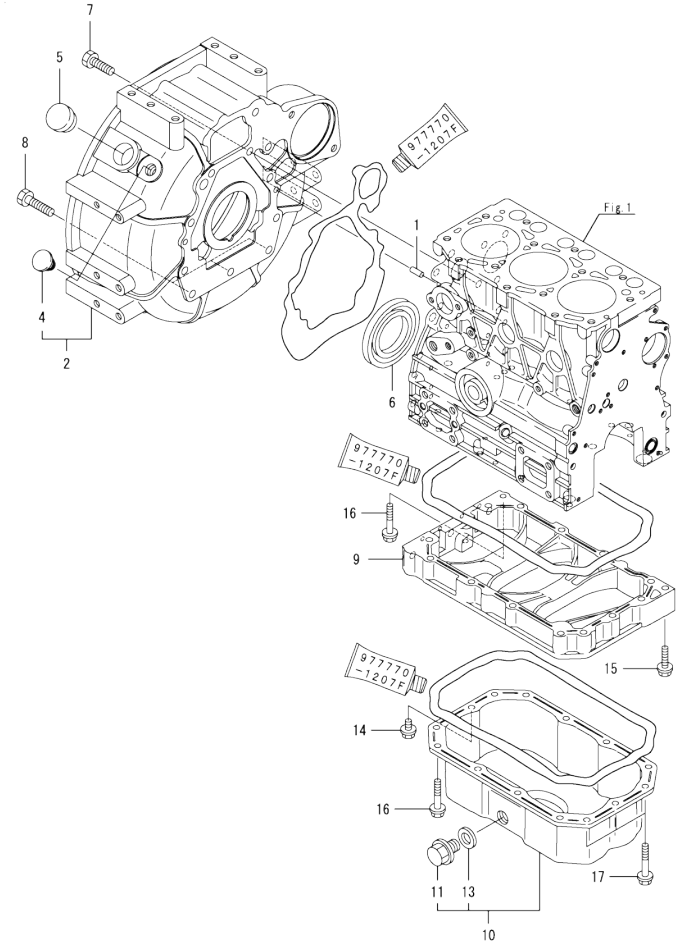

(A)=3TNV76-GGEA (D)=
(B)= (E)=
(C)= (F)=

No.	Lev.	Parts No.	Description	Q'ty (A)	(B)	(C)	(D)	(E)	(F)	I	R
1	1	129100-01580	PIN, M8X16	2							
2	1	119717-01611	HOUSING, FLYWHEEL	1							
4	2	119888-01850	PLUG, RUBBER	1							
5	1	119620-01750	CAP	1							
6	1	124085-02220	SEAL, OIL	1							
7	1	26206-100252	BOLT, M10X 25 PLATED	8							
8	1	26206-100302	BOLT, M10X 30 PLATED	3							
9	1	119717-01720	SPACER, OIL SUMP	1							
10	1	119717-01770	SUMP ASSY, OIL	1							
11	2	105425-01690	PLUG, 16	1							
13	2	22190-160002	WASHER, SEAL 16	1							
14	1	26106-080122	BOLT, M8X 12 PLATED	1							
15	1	26106-080302	BOLT, M8X 30 PLATED	1							
16	1	26106-080452	BOLT, M8X 45 PLATED	11							
17	1	26106-080502	BOLT, M8X 50 PLATED	3							

N:Old ←Yes/No→ New. Q:Old ←No/Yes→ New. R:Old ←Yes/Yes→ New. S:Old ←No/No→ New. W:Add. Z:Discontinued. F:Interchangeable by set. K:Q'ty Change

Copyright (C) YANMAR CO., LTD. All RightsReserved.

Fig.4. CYLINDER HEAD & BONNET

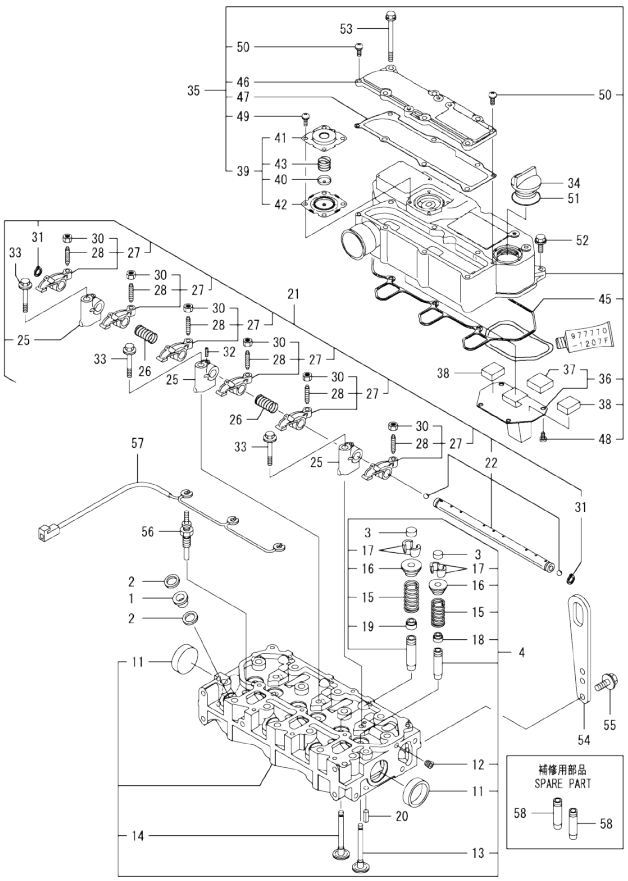

(A)=3TNV76-GGEA
(B)=
(C)=
(D)=
(E)=
(F)=

No.	Lev.	Parts No.	Description	Q'ty (A)	(B)	(C)	(D)	(E)	(F)	I	R
1	1	129901-11450	PROTECTOR, NOZZLE	3							
2	1	119600-11460	GASKET, NOZZLE	6							
3	1	105010-11490	CAP, VALVE	6							
4	1	119717-11740	HEAD ASSY, CYLINDER	1							
11	2	119285-11990	PLUG, 35	2							
12	2	23876-005000	PLUG, R005	1							
13	2	119717-11101	VALVE, INTAKE	3							
14	2	119717-11110	VALVE, EXHAUST	3							
15	2	119717-11131	SPRING, VALVE	6							
16	2	129508-11180	RETAINER, SPRING	6							
17	2	119717-11190	COTTER	12							
18	2	119717-11340	SEAL, VALVE STEM	3							
19	2	119717-11350	SEAL, VALVE STEM	3							
20	1	22351-060012	PIN, SPRING 6.0X12	2							
21	1	119717-11200	SUPPORT ASSY, ARM	1							
22	2	119717-11240	SHAFT ASSY, ROCKER	1							
25	2	119717-11260	SUPPORT, ROCKER ARM	3							
26	2	119620-11280	SPRING	2							
27	2	119717-11650	ARM, ROCKER	6							
28	3	129150-11230	SCREW, VALVE ADJUST	6							
30	3	129150-11750	NUT, M8	6							
31	2	22242-000120	RING, 12	2							
32	2	26979-050162	SCREW, M5X16	1							
33	1	26106-080402	BOLT, M8X 40 PLATED	3							
34	1	124160-01751	COVER, FILLER	1							
35	1	119717-11381	BONNET ASSY, HEAD	1							
36	2	119717-03031	PLATE	1							
37	3	119717-03070	BAFFLE, BREATHER	1							
38	2	119717-03070	BAFFLE, BREATHER	2							
39	2	119802-03100	DIAPHRAGM ASSY	1							
40	3	119802-03110	PLATE	1							
41	3	119802-03121	COVER, DIAPHRAGM	1							
42	3	119802-03131	DIAPHRAGM	1							
43	3	119802-03141	SPRING, DIAPHRAGM	1							
45	2	119718-11310	GASKET, BONNET	1							
46	2	119717-11320	COVER, BONNET	1							
47	2	119717-11331	GASKET	1							
48	2	22857-500100	SCREW, 5X10	4							
49	2	22857-500100	SCREW, 5X10	4							
50	2	22857-500160	SCREW, 5X16	2							
51	1	24311-000320	O-RING, 1AP32.0	1							
52	1	26106-060202	BOLT, M6X 20 PLATED	3							
53	1	26106-060752	BOLT, M6X 75 PLATED	6							
54	1	129900-07900	LIFTER	1							
55	1	26106-080162	BOLT, M8X 16 PLATED	2							
56	1	119717-77800	PLUG, GLOW	3							
57	1	119717-77820	CONNECTOR, GLOW PLUG	1							
58	1	119717-11800	GUIDE, VALVE	6							1

Remarks
(1)Spare part.

N:Old ◄Yes/No► New. Q:Old ◄No/Yes► New. R:Old ◄Yes/Yes► New. S:Old ◄No/No► New. W:Add. Z:Discontinued. F:Interchangeable by set. K:Q'ty Change

Copyright (C) YANMAR CO., LTD. All RightsReserved.

0CW10-M73500 3TNV76-GGEA

Fig.5. AIR CLEANER

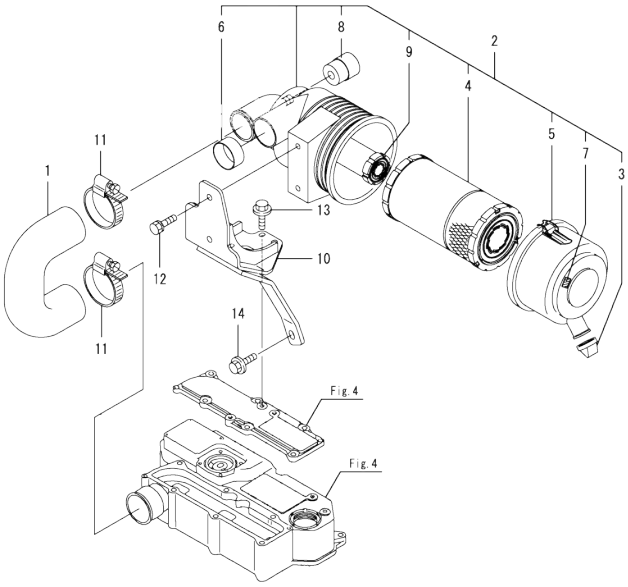

0CW10-M73500 Fig.5

(A)=3TNV76-GGEA (D)=
(B)= (E)=
(C)= (F)=

No.	Lev.	Parts No.	Description	Q'ty (A)	(B)	(C)	(D)	(E)	(F)	I	R
1	1	119761-12020	PIPE, AIR INTAKE	1							
2	1	119515-12530	CLEANER ASSY, AIR	1							
3	2	119808-12540	VALVE, UNLOADER	1							
4	2	119655-12560	ELEMENT	1							
5	2	119336-12570	COVER ASSY	1							
6	2	105027-12580	RING	1							
7	2	129612-12650	LABEL, MARKING	1							
8	2	126650-12680	INDICATOR	1							
9	2	119233-12700	ELEMENT	1							
10	1	119761-12540	SUPPORT, AIR CLEANER	1							
11	1	23000-054000	CLAMP, 54	2							
12	1	26013-080222	BOLT, M8X 22	2							
13	1	26106-060142	BOLT, M6X 14 PLATED	3							
14	1	26106-080162	BOLT, M8X 16 PLATED	1							

N:Old ◄Yes/No► New. Q:Old ◄No/Yes► New. R:Old ◄Yes/Yes► New. S:Old ◄No/No► New. W:Add. Z:Discontinued. F:Interchangeable by set. K:Q'ty Change

Copyright (C) YANMAR CO., LTD. All RightsReserved.

Fig.6. EXHAUST MANIFOLD

(A)=3TNV76-GGEA
(B)=
(C)=
(D)=
(E)=
(F)=

No.	Lev.	Parts No.	Description	Q'ty (A)	(B)	(C)	(D)	(E)	(F)	I	R
1	1	119717-13109	MANIFOLD, EXHAUST	1							
2	1	119717-13110	GASKET	1							
3	1	119717-13600	STUD, M8X50	2							
4	1	119802-13620	BOLT, M8X50	4							
5	1	119131-18320	STUD, M8X22	4							
6	1	26306-080002	NUT, M8	2							
7	1	119515-13200	GASKET, SILENCER	1							

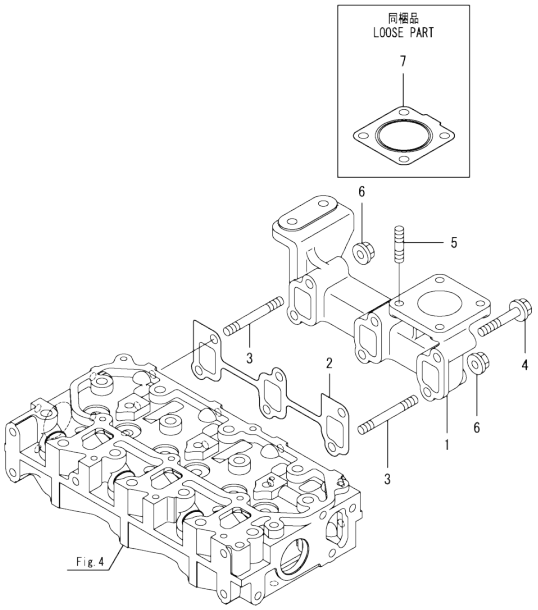

N:Old ←Yes/No→ New. Q:Old ←No/Yes→ New. R:Old ←Yes/Yes→ New. S:Old ←No/No→ New. W:Add. Z:Discontinued. F:Interchangeable by set. K:Q'ty Change

Copyright (C) YANMAR CO., LTD. All RightsReserved.

Fig.7. CAMSHAFT & DRIVING GEAR

(A)=3TNV76-GGEA
(B)=
(C)=
(D)=
(E)=
(F)=

No.	Lev.	Parts No.	Description	Q'ty (A)	(B)	(C)	(D)	(E)	(F)	I	R
1	1	119620-14200	TAPPET	6							
2	1	119717-14400	ROD, PUSH	6							
3	1	119717-14581	CAMSHAFT ASSY	1							
8	1	26106-060122	BOLT, M6X 12 PLATED	2							
9	1	119717-25050	SHAFT, IDLE	1							
10	1	119717-25101	GEAR ASSY, IDLE	1							
13	1	26106-060352	BOLT, M6X 35 PLATED	3							
14	1	129150-25301	BOLT	4							
15	1	119717-25930	GEAR, PUMP	1							
16	1	119717-25911	BUSH, IDLE GEAR	1							1

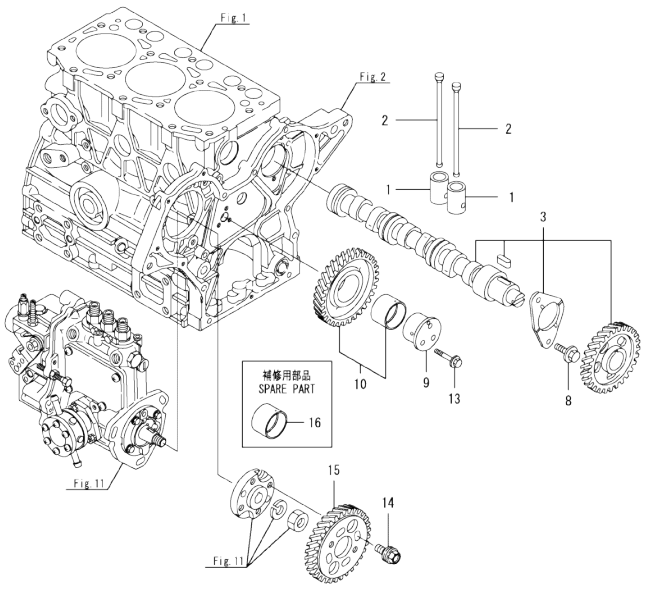

Remarks
(1)Spare part.

N:Old ←Yes/No→ New. Q:Old ←No/Yes→ New. R:Old ←Yes/Yes→ New. S:Old ←No/No→ New. W:Add. Z:Discontinued. F:Interchangeable by set. K:Q'ty Change

Copyright (C) YANMAR CO., LTD. All RightsReserved.

Fig.8. CRANKSHAFT & PISTON

(A)=3TNV76-GGEA
(B)=
(C)=
(D)=
(E)=
(F)=

No.	Lev.	Parts No.	Description	Q'ty (A)	(B)	(C)	(D)	(E)	(F)	I	R
1	1	119717-21700	CRANKSHAFT ASSY	1							
2	2	129100-01580	PIN, M8X16	1							
4	2	119717-21200	GEAR, CRANKSHAFT	1							
5	2	22512-040120	KEY, 4X 12	1							
7	1	121111-21501	BOLT, FLYWHEEL	5							
8	1	119746-21570	FLYWHEEL ASSY	1							
10	2	119865-21600	GEAR, RING	1							
11	1	119717-21650	V-PULLEY	1							
12	1	119621-21681	BOLT, FLANGE 12X1.25	1							
13	1	119620-21941	WASHER	1							
14	1	119717-22080	PISTON ASSY	3							
16	2	119717-22500	RING SET, PISTON	3							
20	1	119717-22300	PIN, PISTON	3							
21	1	22252-000220	RING, 22	6							
22	1	119717-23000	ROD ASSY, CONNECTING	3							
25	2	119717-23200	BOLT, CONNECTING ROD	6							
26	2	119717-23601	BEARING, CRANK PIN	3							
28	1	119717-23910	BEARING, PISTON PIN	3							1
29	1	119717-23611	METAL ASSY, 0.25	3							2
31	1	119717-22090	PISTON ASSY, 0.25 OS	3							3
33	2	119717-22550	RING SET, 0.25 OS	3							3

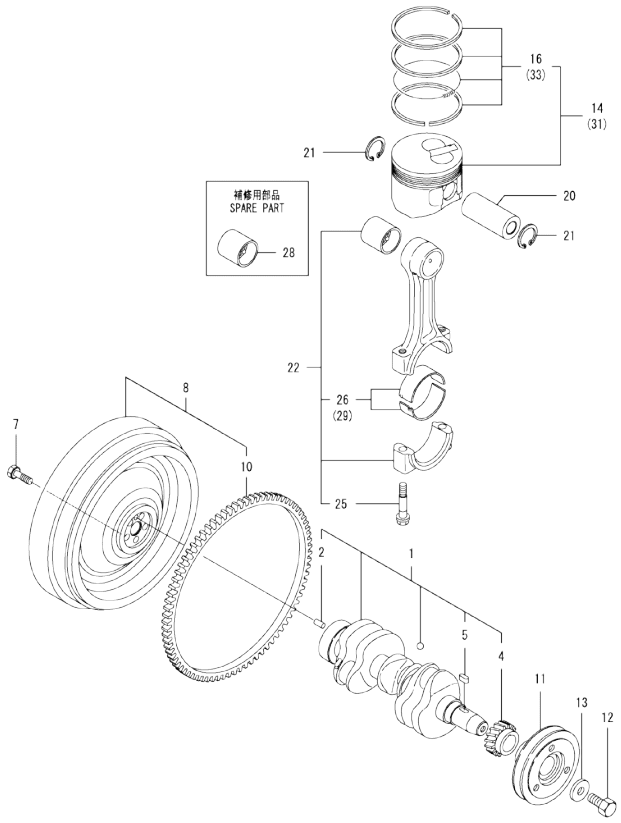

Remarks
(1)Spare part.
(2)Under-sized(U.S.=0.25)part.
(3)Over-sized(O.S.=0.25)part.

N:Old $\frac{\text{Yes}}{\text{No}}$ New. Q:Old $\frac{\text{No}}{\text{Yes}}$ New. R:Old $\frac{\text{Yes}}{\text{Yes}}$ New. S:Old $\frac{\text{No}}{\text{No}}$ New. W:Add. Z:Discontinued. F:Interchangeable by set. K:Q'ty Change

Copyright (C) YANMAR CO., LTD. All RightsReserved.

Fig.9. LUB. OIL SYSTEM

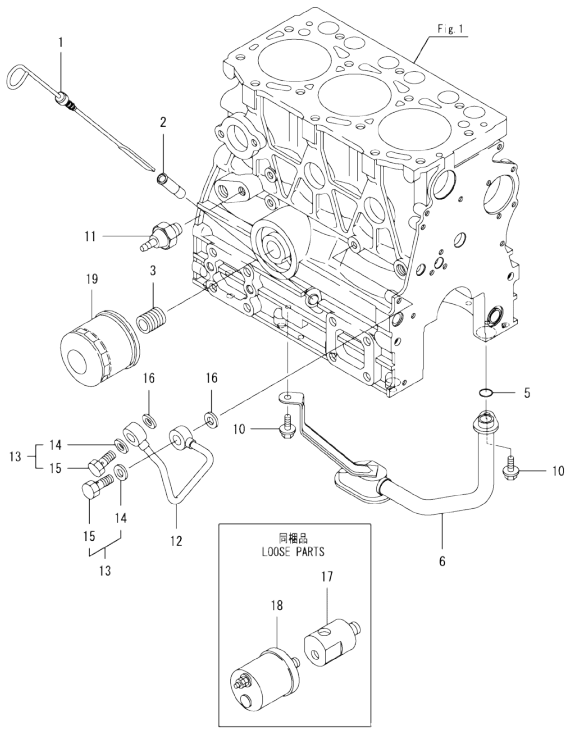

(A)=3TNV76-GGEA
(B)=
(C)=
(D)=
(E)=
(F)=

No.	Lev.	Parts No.	Description	Q'ty (A)	(B)	(C)	(D)	(E)	(F)	I	R
1	1	119717-34801	DIPSTICK, OIL	1							
2	1	121520-34810	GUIDE, DIPSTICK	1							
3	1	119717-35140	BOLT	1							
5	1	119717-32060	O-RING, P15.0	1							
6	1	119717-35080	PIPE ASSY, OIL INLET	1							
10	1	26106-060102	BOLT, M6X 10 PLATED	2							
11	1	114250-39450	SWITCH, 0.5KG	1							
12	1	119717-39210	PIPE, OIL	1							
13	1	129005-59830	BOLT ASSY, JOINT M8	2							
14	2	22190-080002	WASHER, SEAL 6	2							
15	2	23857-030000	BOLT, JOINT 3	2							
16	1	22190-080002	WASHER, SEAL 6	2							
17	1	171375-39601	DAMPER, 1/8	1							
18	1	119773-91501	SENSOR	1							
19	1	119305-35170	FILTER ASSY, D68XL65	1							1

Remarks
(1)Spare part.

N:Old ←Yes/No→ New. Q:Old ←No/Yes→ New, R:Old ←Yes/Yes→ New, S:Old ←No/No→ New, W:Add, Z:Discontinued, F:Interchangeable by set, K:Q'ty Change

Copyright (C) YANMAR CO., LTD. All RightsReserved.

Fig.10. COOLING WATER SYSTEM

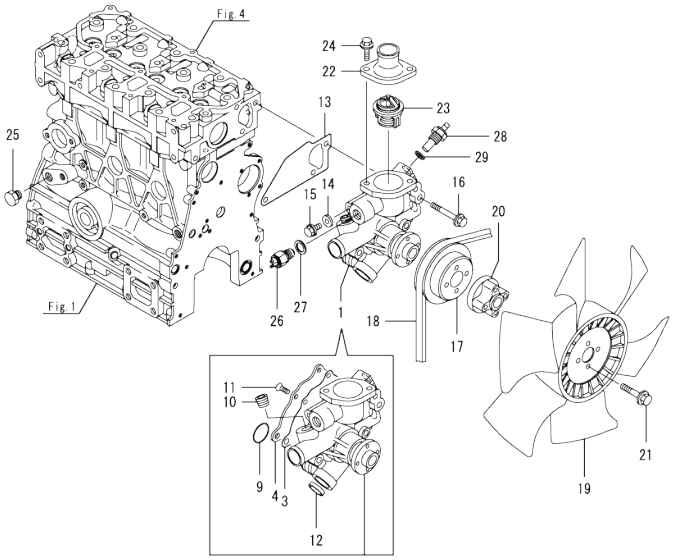

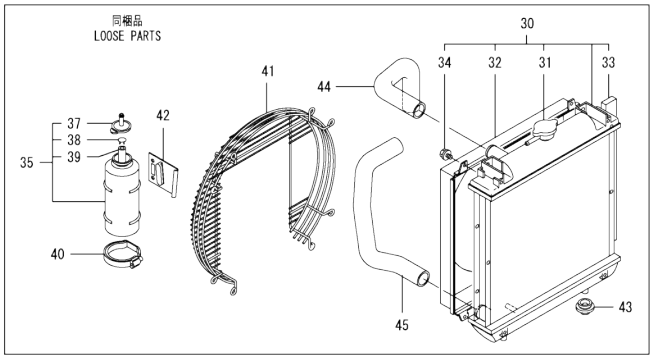

(A)=3TNV76-GGEA
(B)=
(C)=
(D)=
(E)=
(F)=

No.	Lev.	Parts No.	Description	Q'ty (A)	(B)	(C)	(D)	(E)	(F)	I	R
1	1	119E10-42000	PUMP ASSY, WATER	1							
3	2	119717-42031	GASKET	1							
4	2	119717-42041	COVER	1							
9	2	119C10-42320	O-RING, 2028	1							
10	2	129916-49740	PLUG, R03	1							
11	2	26577-060122	SCREW, M6X12	4							
12	2	27241-250000	PLUG, 25	1							
13	1	119717-42020	GASKET, WATER PUMP	1							
14	1	23414-080000	GASKET, 8X1.0	1							
15	1	26106-080122	BOLT, M8X 12 PLATED	1							
16	1	26106-080502	BOLT, M8X 50 PLATED	3							
17	1	119717-42350	V-PULLEY, D=100	1							
18	1	25132-003600	V-BELT, A36	1							
19	1	171340-44740	FAN, COOLING D335XNF	1							
20	1	129457-44760	SPACER, FAN	1							
21	1	26106-060452	BOLT, M6X 45 PLATED	4							
22	1	129350-49530	COVER, THERMOSTAT	1							
23	1	119717-49800	THERMOSTAT, 71	1							
24	1	26106-080202	BOLT, M8X 20 PLATED	2							
25	1	171056-49120	PLUG, DRAIN	1							
26	1	121250-44901	SWITCH, 110	1							
27	1	124465-44950	GASKET, 16	1							
28	1	124250-49351	SENSOR	1							
29	1	129150-49360	GASKET	1							
30	1	119802-44500	RADIATOR ASSY	1							
31	2	129107-44590	CAP, RADIATOR	1							
32	2	119802-44600	SHROUD	1							
33	2	119515-44610	GASKET	2							
34	2	26014-060122	BOLT, M6X 12	4							
35	1	124450-44510	TANK ASSY, SUB	1							
37	2	124450-44530	CAP	1							
38	2	124450-44560	RETAINER	1							
39	2	23061-070230	PIPE, 7X 230	1							
40	1	124450-44550	BAND	1							
41	1	119802-44560	GUARD	1							
42	1	121256-44600	BRACKET, SUB TANK	1							
43	1	119255-44660	ABSORBER	2							
44	1	119802-49010	PIPE, WATER	1							
45	1	119802-49020	PIPE, WATER	1							

N:Old ←Yes/No→ New. Q:Old ←No/Yes→ New. R:Old ←Yes/Yes→ New. S:Old ←No/No→ New. W:Add. Z:Discontinued. F:Interchangeable by set. K:Q'ty Change

Copyright (C) YANMAR CO., LTD. All RightsReserved.

Fig.11. FUEL INJECTION PUMP

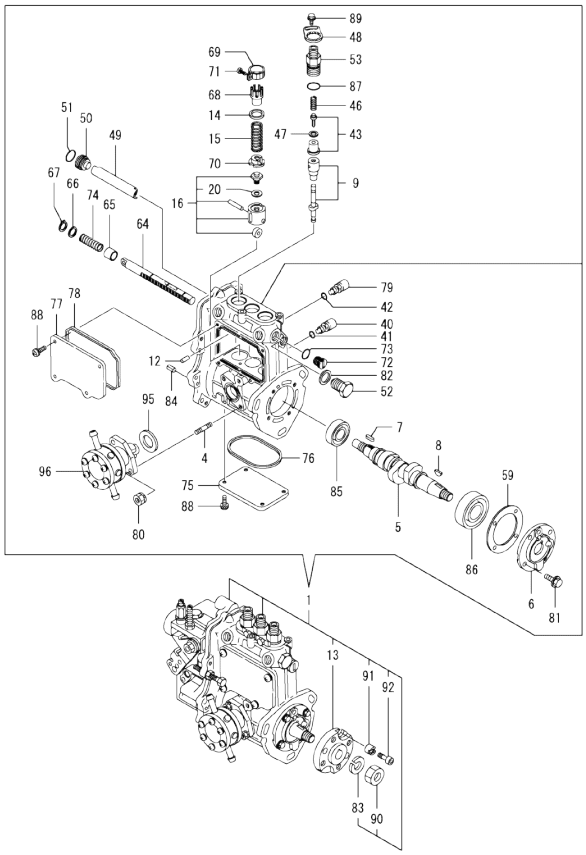

Remarks
(1)Governor(Fig.12)is incorporated in this Fuel Injection Pump (Ref.1).

(A)=3TNV76-GGEA
(B)=
(C)=
(D)=
(E)=
(F)=

No.	Lev.	Parts No.	Description	Q'ty (A)	(B)	(C)	(D)	(E)	(F)	I	R
1	1	719746-51350	PUMP ASSY, INJECTION	1							1
4	2	129155-51020	STUD	2							
5	2	119717-51030	CAMSHAFT	1							
6	2	119717-51060	SUPPORT, CAMSHAFT	1							
7	2	119717-51070	KEY	1							
8	2	122710-51090	KEY	1							
9	2	119717-51100	PLUNGER ASSY	3							
12	2	129155-51140	PIN	3							
13	2	119717-51150	FLANGE	1							
14	2	158600-51170	RETAINER, SPRING	3							
15	2	119717-51190	SPRING, PLUNGER	3							
16	2	119717-51200	TAPPET ASSY	3							
20	3	129155-51600	SHIM SET, ADJUSTING	3							
40	2	158600-51270	STOPPER, TAPPET	3							
41	2	129155-51280	O-RING, S6	3							
42	2	129155-51280	O-RING, S6	1							
43	2	119717-51300	VALVE ASSY, DELIVERY	3							
46	2	119717-51330	SPRING, DELIVERY	3							
47	2	124550-51350	GASKET, DELIVERY	3							
48	2	119125-51370	RETAINER	3							
49	2	129155-51400	DEFLECTOR	1							
50	2	158600-51410	PLUG, DEFLECTOR	1							
51	2	119717-51420	O-RING	1							
52	2	158600-51420	PLUG, DEFLECTOR	1							
53	2	158600-51442	VALVE ASSY, DELIVERY	3							
59	2	129155-51450	SHIM SET, ADJUSTING	1							
64	2	119717-51500	RACK, CONTROL	1							
65	2	119025-51520	BUSH,RACK	1							
66	2	129155-51530	SPACER	1							
67	2	129155-51540	CIRCLIP	1							
68	2	129155-51550	PINION, CONTROL	3							
69	2	129100-51560	PINION	3							
70	2	119717-51570	RETAINER, SPRING	3							
71	2	129100-51570	SCREW	3							
72	2	158600-51570	PLUG	1							
73	2	129155-51580	O-RING	1							
74	2	129155-51591	SPRING, RACK	1							
75	2	129155-51701	COVER	1							
76	2	119717-51711	GASKET	1							
77	2	119717-51750	COVER	1							
78	2	119717-51761	GASKET	1							
79	2	158600-51790	STOOPER, RACK	1							
80	2	119717-51860	NUT, M6	2							
81	2	119125-51900	BOLT, 6 X 14	4							
82	2	22190-160002	WASHER, SEAL 16	1							
83	2	22217-120000	WASHER, SPRING 12	1							
84	2	22351-050010	PIN, SPRING 5.0X10	2							
85	2	24101-060034	BEARING, BALL 6003	1							
86	2	24101-063034	BEARING, BALL 6303	1							
87	2	24316-000150	O-RING, 4DP15.0	3							
88	2	26022-050122	SCREW, M5X12	8							

N:Old ←Yes/No→ New. Q:Old ←No/Yes→ New. R:Old ←Yes/Yes→ New. S:Old ←No/No→ New. W:Add. Z:Discontinued. F:Interchangeable by set. K:Q'ty Change

++ CONTINUE ++

Copyright (C) YANMAR CO., LTD. All RightsReserved.

Fig.11. FUEL INJECTION PUMP

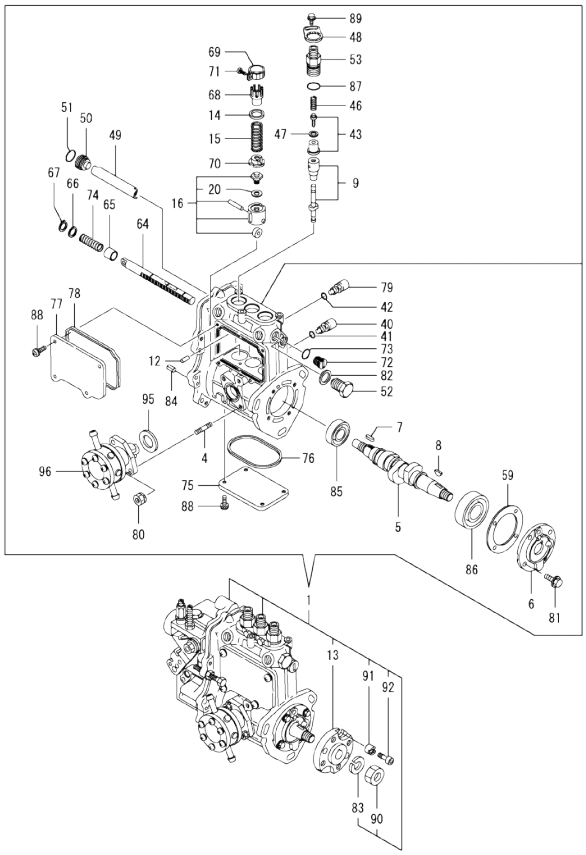

Remarks
(1)Governor(Fig.12)is incorporated in
this Fuel Injection Pump (Ref.1).

(A)=3TNV76-GGEA
(B)=
(C)=
(D)=
(E)=
(F)=

No.	Lev.	Parts No.	Description	Q'ty (A)	(B)	(C)	(D)	(E)	(F)	I	R
89	2	26106-050102	BOLT, M5X 10 PLATED	3							
90	2	26716-120002	NUT, M12	1							
91	2	119717-51480	COLLAR	1							
92	2	119717-51490	BOLT	1							
95	2	129155-52051	GASKET	1							
96	2	129100-52101	PUMP ASSY, FUEL FEED	1							

N:Old ←Yes/No→ New. Q:Old ←No/Yes→ New. R:Old ←Yes/Yes→ New. S:Old ←No/No→ New. W:Add. Z:Discontinued. F:Interchangeable by set. K:Q'ty Change

Copyright (C) YANMAR CO., LTD. All RightsReserved.

Fig.12. GOVERNOR

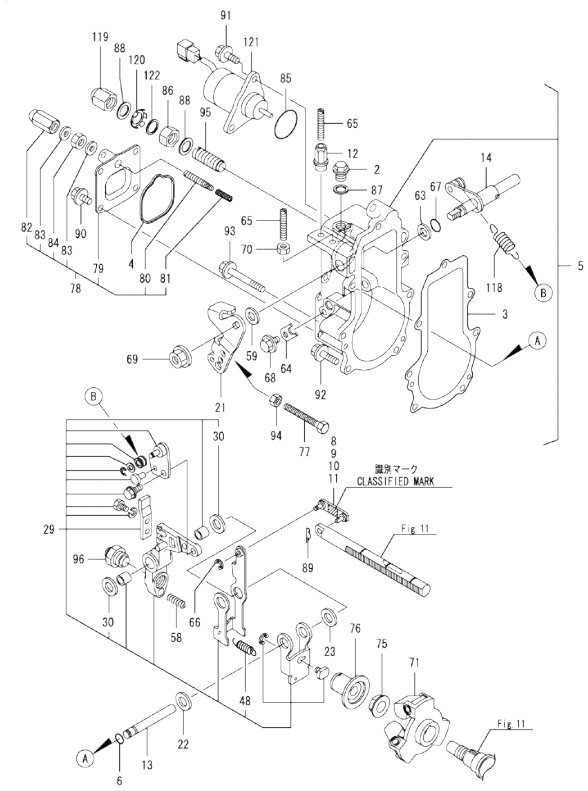

Remarks
*This figure(Governor)is incorporated
in the Fuel Injection Pump (Fig.11).
(1)Selective parts, mark; 3
(2)Selective parts, mark; 98
(3)Selective parts, mark; 88
(4)Selective parts, mark; 03

(A)=3TNV76-GGEA (D)=
(B)= (E)=
(C)= (F)=

No.	Lev.	Parts No.	Description	Q'ty (A)	(B)	(C)	(D)	(E)	(F)	I	R
2	2	119717-51930	PLUG,M10	1							
3	2	119717-61050	GASKET	1							
4	2	119717-61070	GASKET	1							
5	2	119746-61100	CASE ASSY, GOVERNOR	1							
6	3	129155-51280	O-RING, S6	1							
8	3	119717-61120	LINK, MARK :3	1							1
9	3	119717-61130	LINK, MARK 98	1							2
10	3	119717-61140	LINK, MARK 88	1							3
11	3	119717-61150	LINK, MARK 03	1							4
12	3	129209-61370	NUT, M6	1							
13	3	129052-61390	SHAFT	1							
14	3	119717-61400	SHAFT ASSY	1							
21	3	119746-61440	LEVER, CONTROL	1							
22	3	129156-61460	SHIM, T=0.6	1							
23	3	129155-61480	SPACER ASSY	1							
29	3	119746-61500	LEVER ASSY, GOVERNOR	1							
30	4	174307-51700	SHIM SET	2							
48	4	129486-61540	SPRING, SET	1							
58	3	129486-61650	SPRING, STARTING	1							
59	3	158552-61700	SHIM SET	1							
63	3	158552-61710	SHIM, T=1.0	1							
64	3	119660-61901	RETAINER, SHAFT	1							
65	3	121575-66830	SCREW	2							
66	3	22272-000030	RING, E- 3	1							
67	3	24341-000070	O-RING, 1AS7.0	1							
68	3	26106-060102	BOLT, M6X 10 PLATED	1							
69	3	26366-080002	NUT, M8	1							
70	3	26756-060002	NUT, LOCK M6	1							
71	2	119717-61201	WEIGHT ASSY,GOVERNOR	1							
75	2	129008-61301	NUT	1							
76	2	129155-61341	SLEEVE	1							
77	2	129155-61460	BOLT, IDLE	1							
78	2	119746-61600	COVER ASSY	1							
79	3	119746-61060	COVER, GOVERNOR CASE	1							
80	3	119645-61070	SCREW	1							
81	3	119746-61080	SPRING	1							
82	3	119600-66840	NUT, CAP	1							
83	3	22190-060003	SEAL WASER 6	2							
84	3	26756-060002	NUT, LOCK M6	1							
85	2	158552-61900	O-RING	1							
86	2	129209-61920	NUT, ARB	1							
87	2	22190-100002	WASHER, SEAL 10	1							
88	2	22190-120002	WASHER, SEAL 12	2							
89	2	22372-040000	PIN, SNAP 4	1							
90	2	26106-060102	BOLT, M6X 10 PLATED	4							
91	2	26106-060142	BOLT, M6X 14 PLATED	2							
92	2	26106-060202	BOLT, M6X 20 PLATED	4							
93	2	26106-060452	BOLT, M6X 45 PLATED	3							
94	2	26756-060002	NUT, LOCK M6	1							
95	2	120323-61470	BOLT, CONTROL	1							
96	2	119746-61550	ANGLEICH ASSY	1							

N:Old ←Yes/No→ New. Q:Old ←No/Yes→ New. R:Old ←Yes/Yes→ New. S:Old ←No/No→ New. W:Add. Z:Discontinued. F:Interchangeable by set. K:Q'ty Change

++ CONTINUE ++

Copyright (C) YANMAR CO., LTD. All RightsReserved.

Fig.12. GOVERNOR

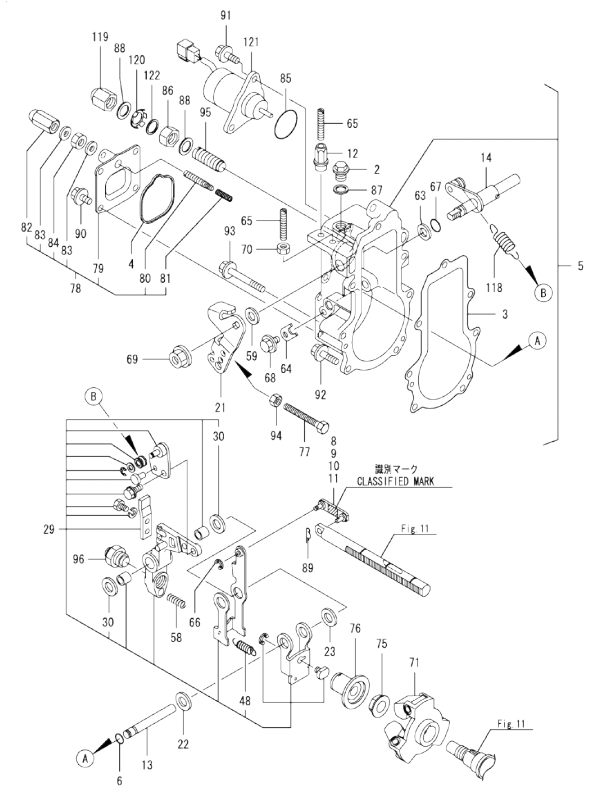

Remarks
*This figure(Governor)is incorporated
in the Fuel Injection Pump (Fig.11).
(1)Selective parts, mark; 3
(2)Selective parts, mark; 98
(3)Selective parts, mark; 88
(4)Selective parts, mark; 03

(A)=3TNV76-GGEA
(B)=
(C)=
(D)=
(E)=
(F)=

No.	Lev.	Parts No.	Description	Q'ty (A)	(B)	(C)	(D)	(E)	(F)	I	R
118	2	119746-61700	SPRING, GOVERNOR	1							
119	2	129209-61930	NUT, CAP	1							
120	2	129209-61970	PLATE	1							
121	2	119653-77950	SOLENOID, STOP	1							
122	2	23414-120016	GASKET, 12X1.0	1							

N:Old ←Yes/No→ New. Q:Old ←No/Yes→ New. R:Old ←Yes/Yes→ New. S:Old ←No/No→ New. W:Add. Z:Discontinued. F:Interchangeable by set. K:Q'ty Change

Copyright (C) YANMAR CO., LTD. All RightsReserved.

Fig.13. FUEL INJECTION VALVE

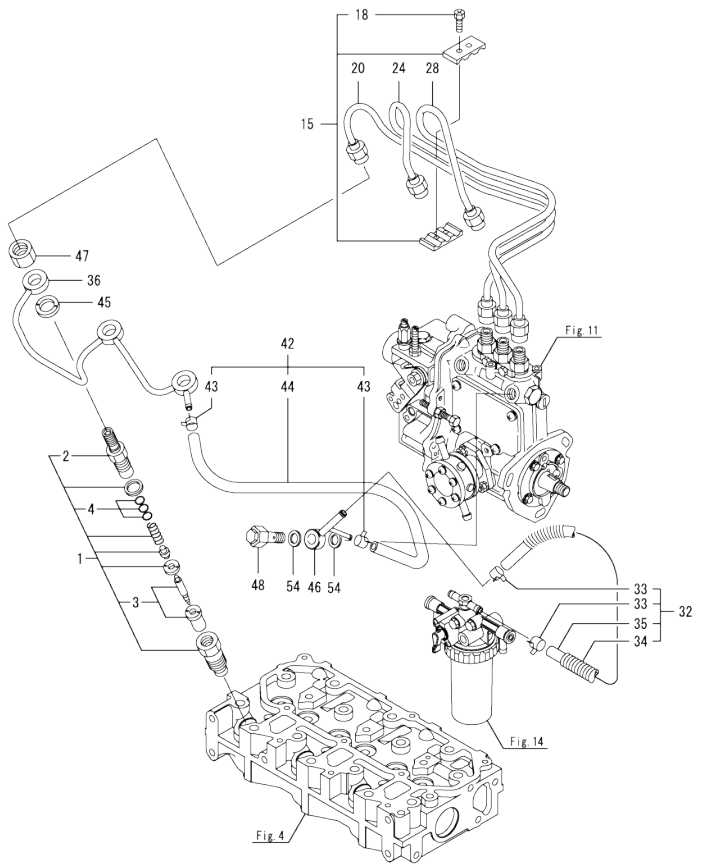

(A)=3TNV76-GGEA (D)=
(B)= (E)=
(C)= (F)=

No.	Lev.	Parts No.	Description	Q'ty (A)	(B)	(C)	(D)	(E)	(F)	I	R
1	1	119717-53001	VALVE ASSY,INJECTION	3							
2	2	118200-53010	HOLDER, NOZZLE	3							
3	2	119717-53010	VALVE ASSY,INJECTION	3							
4	2	129901-53800	SHIM SET, ADJUSTING	3							
15	1	129150-59120	RETAINER, PIPE	1							
18	2	129150-59131	BOLT, M4X14	2							
20	1	119717-59810	PIPE ASSY, INJECTION	1							
24	1	119717-59820	PIPE ASSY, INJECTION	1							
28	1	119717-59830	PIPE ASSY, INJECTION	1							
32	1	129956-59010	PIPE ASSY, FUEL	1							
33	2	124766-59050	CLIP, HOSE 12	2							
34	2	129957-59101	TUBE, CORRUGATED	1							
35	2	105225-59511	PIPE, FUEL	1							
36	1	119717-59510	PIPE ASSY, RETURN	1							
42	1	119744-59560	PIPE ASSY, RETURN	1							
43	2	124066-59100	CLIP, HOSE 8	2							
44	2	119744-59570	PIPE, FUEL RETURN	1							
45	1	129901-59560	GASKET	3							
46	1	119740-59590	JOINT, OVER FLOW	1							
47	1	119620-59700	NUT, NOZZLE	3							
48	1	119813-59950	VALVE ASSY, CHECK	1							
54	1	22190-120002	WASHER, SEAL 12	2							

N:Old ◄Yes/No► New. Q:Old ◄No/Yes► New. R:Old ◄Yes/Yes► New. S:Old ◄No/No► New. W:Add. Z:Discontinued. F:Interchangeable by set. K:Q'ty Change

Copyright (C) YANMAR CO., LTD. All RightsReserved.

Fig.14. FUEL LINE

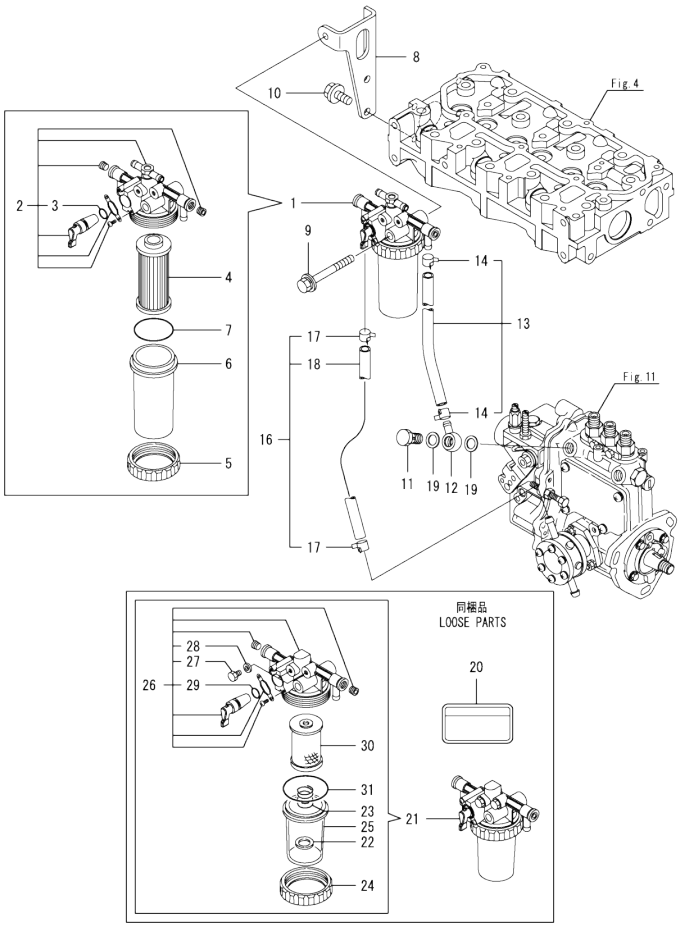

(A)=3TNV76-GGEA
(B)=
(C)=
(D)=
(E)=
(F)=

No.	Lev.	Parts No.	Description	Q'ty (A)	(B)	(C)	(D)	(E)	(F)	I	R
1	1	119833-55630	FILTER ASSY, FUEL	1							
2	2	119833-55640	BODY ASSY,FILTER	1							
3	3	24311-000110	O-RING, 1AP11.0	1							
4	2	119833-55650	ELEMENT, FUEL	1							
5	2	119833-55660	RING, RETAINING	1							
6	2	119833-55670	BOWL, STRAINER	1							
7	2	24311-000440	O-RING, 1AP44.0	1							
8	1	119717-55650	BRACKET, FILTER	1							
9	1	26014-080702	BOLT, M8X 70	1							
10	1	26106-080162	BOLT, M8X 16 PLATED	2							
11	1	103854-39140	BOLT, PIPE JOINT	1							
12	1	101304-59020	JOINT, PIPE 12	1							
13	1	129210-59080	PIPE ASSY, FUEL	1							
14	2	124766-59050	CLIP, HOSE 12	2							
16	1	129210-59170	PIPE ASSY, FUEL	1							
17	2	124766-59050	CLIP, HOSE 12	2							
18	2	105225-59511	PIPE, FUEL	1							
19	1	22190-120002	WASHER, SEAL 12	2							
20	1	114110-07761	LABEL, FUEL OIL CAUT	1							
21	1	129335-55750	SEPARATOR ASSY,WATER	1							
22	2	129053-55640	FLOAT	1							
23	2	129053-55650	SPRING, SCREEN	1							
24	2	119833-55660	RING, RETAINING	1							
25	2	129335-55740	CUP	1							
26	2	129335-55770	BODY ASSY	1							
27	3	129242-55750	VALVE, AIR VENT	2							
28	3	129242-55760	GASKET	2							
29	3	24311-000110	O-RING, 1AP11.0	1							
30	2	129335-55780	ELEMENT ASSY	1							
31	2	24311-000440	O-RING, 1AP44.0	1							

N:Old ◄Yes/No► New. Q:Old ◄No/Yes► New. R:Old ◄Yes/Yes► New. S:Old ◄No/No► New. W:Add. Z:Discontinued. F:Interchangeable by set. K:Q'ty Change

Copyright (C) YANMAR CO., LTD. All RightsReserved.

Fig.15. STARTING MOTOR

(A)=3TNV76-GGEA
(B)=
(C)=
(D)=
(E)=
(F)=

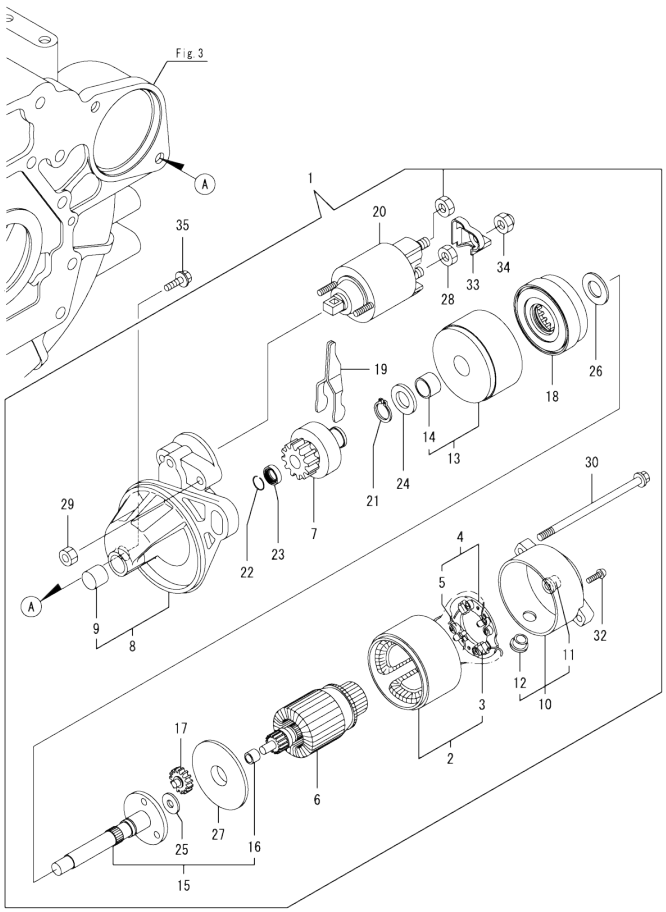

No.	Lev.	Parts No.	Description	Q'ty (A)	(B)	(C)	(D)	(E)	(F)	I	R
1	1	119717-77010	STARTER, P1.1	1							
2	2	X0281007750	YOKE ASSY	1							
3	3	X0280996180	STARTER KIT	2							
4	2	X0285105190	HOLDER ASSY	1							
5	3	X0285205030	SPRING	4							
6	2	X0282005991	ARMATURE ASSY	1							
7	2	X0283006960	CLUTCH ASSY	1							
8	2	X4284001590	HOUSING ASSY,STARTER	1							
9	3	X9491050100	BEARING, NEEDLE	1							
10	2	X0285007030	FRAME ASSY.	1							
11	3	X9491040990	BEARING	1							
12	3	X0280626010	COVER	1							
13	2	X0284105040	BEARING ASSY	1							
14	3	X9491034330	BEARING	1							
15	2	X0286105010	SHAFT ASSY	1							
16	3	X9491034320	BEARING	1							
17	2	X0286305010	GEAR	3							
18	2	X0286355010	GEAR	1							
19	2	X0287405140	LEVER	1							
20	2	X0534007800	SWITCH ASSY	1							
21	2	X9055715000	RING	1							
22	2	X9490721360	RING	1							
23	2	X0280210331	NUT	1							
24	2	X9490138110	WASHER	1							
25	2	X9490138090	WASHER	1							
26	2	X9490138100	WASHER	1							
27	2	X0284525010	PLATE	1							
28	2	X9490562360	NUT	1							
29	2	X9490560750	NUT	2							
30	2	X9490423420	BOLT, THROUGH	2							
32	2	X9490065670	SCREW, M4X6	2							
33	2	X0280335350	COVER, TERMINAL	1							
34	2	X1289510130	NUT	1							
35	1	26106-100252	BOLT, M10X 25 PLATED	2							

N:Old ←Yes/No→ New. Q:Old ←No/Yes→ New. R:Old ←Yes/Yes→ New. S:Old ←No/No→ New. W:Add. Z:Discontinued. F:Interchangeable by set. K:Q'ty Change

Copyright (C) YANMAR CO., LTD. All RightsReserved.

Fig.16. GENERATOR

(A)=3TNV76-GGEA
(B)=
(C)=
(D)=
(E)=
(F)=

No.	Lev.	Parts No.	Description	Q'ty (A)	(B)	(C)	(D)	(E)	(F)	I	R
1	1	129423-77200	GENERATOR, 12V-40A	1							
2	2	X9490561001	NUT	1							
3	2	119620-77380	ROTOR ASSY	1							
4	3	123501-79240	BEARING, BALL	1							
5	3	119620-79250	COVER, BEARING	1							
6	2	119620-77421	FRAME ASSY, DRIVE	1							
7	3	119620-79200	BALL BEARING	1							
8	3	119620-79210	PLATE, RETAINER	1							
9	3	119620-79220	SCREW	4							
10	3	119620-79230	STUD	2							
11	2	119620-77440	FLAME ASSY, REAR	1							
12	2	119620-77461	PULLEY	1							
13	2	119620-77471	NUT	1							
14	2	119620-77490	COLLAR	1							
15	2	129423-77710	REGULATOR ASSY	1							
16	2	119620-79260	HOLDER	1							
17	2	129052-79270	HOLDER, BRUSH	1							
18	3	119620-77480	BRUSH ASSY	2							
19	3	119620-79280	SPRING	2							
20	2	119620-79290	SCREW	6							
21	2	119620-79300	SCREW	1							
22	2	129240-79300	COVER	1							
23	2	119620-79310	BOLT	3							
24	2	119620-79320	SCREW	2							
25	2	119620-79330	BOLT	2							
26	2	119620-79340	BUSH, INSULATION	1							
27	2	119620-79350	NUT	2							
28	2	119620-79360	WASHER, THRUST	1							
29	1	26106-100452	BOLT, M10X 45 PLATED	1							
30	1	119940-77270	SPACER, GENERATOR	1							
31	1	119717-77340	ADJUSTER	1							
32	1	129972-77341	BOLT, ADJUSTER L=50	1							
33	1	26106-080202	BOLT, M8X 20 PLATED	1							
34	1	119643-66900	DIODE	1							
35	1	119650-77911	RELAY ASSY, GLOW	1							
38	1	129211-77920	TIMER	1							

N:Old ←Yes/No→ New. Q:Old ←No/Yes→ New. R:Old ←Yes/Yes→ New. S:Old ←No/No→ New. W:Add. Z:Discontinued. F:Interchangeable by set. K:Q'ty Change

Copyright (C) YANMAR CO., LTD. All RightsReserved.

Fig.17. GASKET SET

(A)=3TNV76-GGEA
(B)=
(C)=
(D)=
(E)=
(F)=

No.	Lev.	Parts No.	Description	Q'ty (A)	(B)	(C)	(D)	(E)	(F)	I	R
1	1	719747-92600	GASKET SET	1							1
2	2	119717-01331	GASKET, HEAD	1							
3	2	119718-11310	GASKET, BONNET	1							
4	2	119717-11331	GASKET	1							
5	2	119717-11340	SEAL, VALVE STEM	3							
6	2	119717-11350	SEAL, VALVE STEM	3							
7	2	129901-11450	PROTECTOR, NOZZLE	3							
8	2	119600-11460	GASKET, NOZZLE	6							
9	2	119717-13110	GASKET	1							
10	2	119515-13200	GASKET, SILENCER	1							
11	2	119624-32040	O-RING, P12.0	1							
12	2	119717-32050	O-RING, P17.0	3							
13	2	119717-32060	O-RING, P15.0	1							
14	2	119717-42020	GASKET, WATER PUMP	1							
15	2	124465-44950	GASKET, 16	1							
16	2	129150-49360	GASKET	1							
17	2	121850-51960	O-RING	1							
18	2	129901-59560	GASKET	3							
19	2	22190-080002	WASHER, SEAL 6	4							
20	2	22190-120002	WASHER, SEAL 12	4							
21	2	22190-160002	WASHER, SEAL 16	1							
22	2	23414-080000	GASKET, 8X1.0	1							
23	2	24311-000320	O-RING, 1AP32.0	2							
24	2	24341-000240	O-RING, 1AS24.0	1							
25	1	129400-92420	HONE	1							1
26	1	977770-1207F	GASKET.LIQUID	1							1

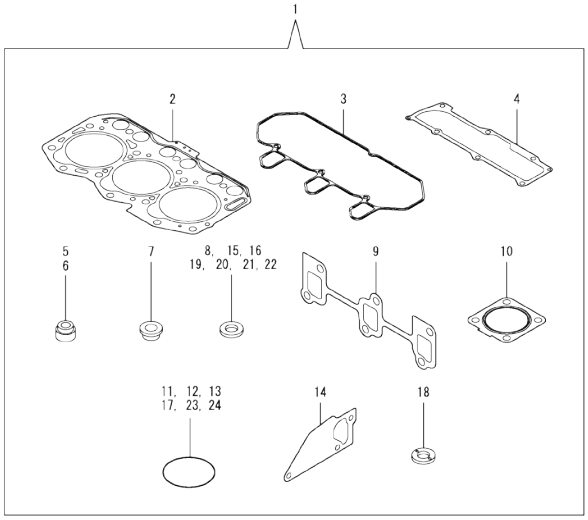

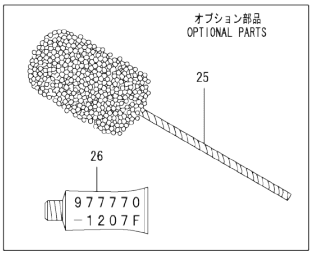

Remarks
(1)Optional parts.

N:Old ←Yes/No→ New. Q:Old ←No/Yes→ New. R:Old ←Yes/Yes→ New. S:Old ←No/No→ New. W:Add. Z:Discontinued. F:Interchangeable by set. K:Q'ty Change

Copyright (C) YANMAR CO., LTD. All RightsReserved.

Parts No. Index

Parts No.	Fig. No.	Ref. No.
101304-59020	14	12
103854-39140	14	11
105010-11490	4	3
105027-12580	5	6
105225-59511	13	35
	14	18
105311-01090	1	5
105425-01690	3	11
114110-07761	14	20
114250-39450	9	11
118200-53010	13	2
119025-51520	11	65
119125-51370	11	48
119125-51900	11	81
119131-18320	6	5
119233-12700	5	9
119255-44660	10	43
119285-01990	1	8
119285-11990	4	11
119305-35170	9	19
119336-12570	5	5
119515-12530	5	2
119515-13200	6	7
	17	10
119515-44610	10	33
119600-11460	4	2
	17	8
119600-66840	12	82
119620-01750	3	5
119620-02020	1	9
119620-11280	4	26
119620-14200	7	1
119620-21941	8	13
119620-59700	13	47
119620-77380	16	3
119620-77421	16	6
119620-77440	16	11
119620-77461	16	12
119620-77471	16	13
119620-77480	16	18
119620-77490	16	14
119620-79200	16	7
119620-79210	16	8
119620-79220	16	9
119620-79230	16	10
119620-79250	16	5
119620-79260	16	16
119620-79280	16	19
119620-79290	16	20
119620-79300	16	21

Parts No.	Fig. No.	Ref. No.
119620-79310	16	23
119620-79320	16	24
119620-79330	16	25
119620-79340	16	26
119620-79350	16	27
119620-79360	16	28
119621-21681	8	12
119623-01250	1	6
119624-32040	2	18
	17	11
119643-66900	16	34
119645-61070	12	80
119650-77911	16	35
119653-77950	12	121
119655-12560	5	4
119660-01911	2	17
119660-61901	12	64
119717-01331	1	27
	17	2
119717-01501	2	1
119717-01570	2	2
119717-01611	3	2
119717-01720	3	9
119717-01750	2	16
119717-01770	3	10
119717-01800	2	7
119717-02411	1	12
119717-02930	1	23
119717-03031	4	36
119717-03070	4	37
		38
119717-11101	4	13
119717-11110	4	14
119717-11131	4	15
119717-11190	4	17
119717-11200	4	21
119717-11240	4	22
119717-11260	4	25
119717-11320	4	46
119717-11331	4	47
	17	4
119717-11340	4	18
	17	5
119717-11350	4	19
	17	6
119717-11381	4	35
119717-11650	4	27
119717-11740	4	4
119717-11800	4	58
119717-13109	6	1

Parts No.	Fig. No.	Ref. No.
119717-13110	6	2
	17	9
119717-13600	6	3
119717-14400	7	2
119717-14581	7	3
119717-21200	8	4
119717-21650	8	11
119717-21700	8	1
119717-22080	8	14
119717-22090	8	31
119717-22300	8	20
119717-22500	8	16
119717-22550	8	33
119717-23000	8	22
119717-23200	8	25
119717-23601	8	26
119717-23611	8	29
119717-23910	8	28
119717-25050	7	9
119717-25101	7	10
119717-25911	7	16
119717-25930	7	15
119717-32050	2	19
	17	12
119717-32060	9	5
	17	13
119717-32080	2	9
119717-32100	2	8
119717-32110	2	13
119717-32120	2	14
119717-34801	9	1
119717-35080	9	6
119717-35140	9	3
119717-39210	9	12
119717-42020	10	13
	17	14
119717-42031	10	3
119717-42041	10	4
119717-42350	10	17
119717-49800	10	23
119717-51030	11	5
119717-51060	11	6
119717-51070	11	7
119717-51100	11	9
119717-51150	11	13
119717-51190	11	15
119717-51200	11	16
119717-51300	11	43
119717-51330	11	46
119717-51420	11	51

Parts No.	Fig. No.	Ref. No.
119717-51480	11	91
119717-51490	11	92
119717-51500	11	64
119717-51570	11	70
119717-51711	11	76
119717-51750	11	77
119717-51761	11	78
119717-51860	11	80
119717-51930	12	2
119717-53001	13	1
119717-53010	13	3
119717-55650	14	8
119717-59510	13	36
119717-59810	13	20
119717-59820	13	24
119717-59830	13	28
119717-61050	12	3
119717-61070	12	4
119717-61120	12	8
119717-61130	12	9
119717-61140	12	10
119717-61150	12	11
119717-61201	12	71
119717-61400	12	14
119717-77010	15	1
119717-77340	16	31
119717-77800	4	56
119717-77820	4	57
119718-11310	4	45
	17	3
119734-01580	2	3
119740-59590	13	46
119744-01521	2	5
119744-59560	13	42
119744-59570	13	44
119746-21570	8	8
119746-61060	12	79
119746-61080	12	81
119746-61100	12	5
119746-61440	12	21
119746-61500	12	29
119746-61550	12	96
119746-61600	12	78
119746-61700	12	118
119761-12020	5	1
119761-12540	5	10
119773-91501	9	18
119802-03100	4	39
119802-03110	4	40
119802-03121	4	41

Parts No. Index

Parts No.	Fig. No.	Ref. No.
119802-03131	4	42
119802-03141	4	43
119802-13620	6	4
119802-32130	2	15
119802-44500	10	30
119802-44560	10	41
119802-44600	10	32
119802-49010	10	44
119802-49020	10	45
119808-12540	5	3
119810-01200	1	26
119810-02941	1	34
119813-59950	13	48
119833-55630	14	1
119833-55640	14	2
119833-55650	14	4
119833-55660	14	5
		24
119833-55670	14	6
119865-21600	8	10
119888-01850	3	4
119940-77270	16	30
119C10-42320	10	9
119E10-42000	10	1
120323-61470	12	95
121023-01551	2	30
121111-21501	8	7
121250-44901	10	26
121256-44600	10	42
121520-34810	9	2
121575-66830	12	65
121850-51960	2	20
	17	17
122710-51090	11	8
123501-79240	16	4
124060-01050	1	4
124066-59100	13	43
124085-02220	3	6
124160-01751	2	28
	4	34
124160-01910	1	7
124250-49351	10	28
124450-44510	10	35
124450-44530	10	37
124450-44550	10	40
124450-44560	10	38
124465-44950	10	27
	17	15
124550-51350	11	47
124766-59050	13	33

Parts No.	Fig. No.	Ref. No.
124766-59050	14	14
		17
126650-12680	5	8
129001-32320	2	11
129001-32330	2	12
129005-59830	9	13
129008-61301	12	75
129052-61390	12	13
129052-79270	16	17
129053-55640	14	22
129053-55650	14	23
129100-01580	3	1
	8	2
129100-51560	11	69
129100-51570	11	71
129100-52101	11	96
129107-44590	10	31
129150-11230	4	28
129150-11750	4	30
129150-25301	7	14
129150-49360	10	29
	17	16
129150-59120	13	15
129150-59131	13	18
129155-51020	11	4
129155-51140	11	12
129155-51280	11	41
		42
	12	6
129155-51400	11	49
129155-51450	11	59
129155-51530	11	66
129155-51540	11	67
129155-51550	11	68
129155-51580	11	73
129155-51591	11	74
129155-51600	11	20
129155-51701	11	75
129155-52051	11	95
129155-61341	12	76
129155-61460	12	77
129155-61480	12	23
129156-61460	12	22
129209-61370	12	12
129209-61920	12	86
129209-61930	12	119
129209-61970	12	120
129210-59080	14	13
129210-59170	14	16
129211-77920	16	38

Parts No.	Fig. No.	Ref. No.
129240-79300	16	22
129242-55750	14	27
129242-55760	14	28
129335-55740	14	25
129335-55750	14	21
129335-55770	14	26
129335-55780	14	30
129350-49530	10	22
129400-92420	17	25
129423-77200	16	1
129423-77710	16	15
129457-44760	10	20
129486-61540	12	48
129486-61650	12	58
129508-11180	4	16
129612-12650	5	7
129900-07900	4	54
129900-32130	2	10
129901-11450	4	1
	17	7
129901-53800	13	4
129901-59560	13	45
	17	18
129916-49740	10	10
129956-59010	13	32
129957-59101	13	34
129972-77341	16	32
158552-61700	12	59
158552-61710	12	63
158552-61900	12	85
158600-51170	11	14
158600-51270	11	40
158600-51410	11	50
158600-51420	11	52
158600-51442	11	53
158600-51570	11	72
158600-51790	11	79
171056-49120	10	25
171340-44740	10	19
171375-39601	9	17
174307-51700	12	30
22190-060003	12	83
22190-080002	9	14
		16
	17	19
22190-100002	12	87
22190-120002	12	88
	13	54
	14	19
	17	20

Parts No.	Fig. No.	Ref. No.
22190-160002	3	13
	11	82
	17	21
22217-120000	11	83
22242-000120	4	31
22252-000220	8	21
22272-000030	12	66
22351-050010	11	84
22351-060012	4	20
22372-040000	12	89
22512-040120	8	5
22857-500100	4	48
		49
22857-500160	4	50
23000-054000	5	11
23061-070230	10	39
23414-080000	10	14
	17	22
23414-120016	12	122
23857-030000	9	15
23876-005000	4	12
23876-030000	2	6
24101-060034	11	85
24101-063034	11	86
24311-000110	14	3
		29
24311-000320	2	29
	4	51
	17	23
24311-000440	14	7
		31
24316-000150	11	87
24341-000070	12	67
24341-000240	2	31
	17	24
25132-003600	10	18
26013-080222	5	12
26014-060122	10	34
26014-080702	14	9
26022-050122	11	88
26106-050102	11	89
26106-060102	9	10
	12	68
		90
26106-060122	2	21
	7	8
26106-060142	5	13
	12	91
26106-060162	2	22
		32

Parts No. Index

Parts No.	Fig. No.	Ref. No.
26106-060202	4	52
	12	92
26106-060352	7	13
26106-060402	2	23
		24
26106-060452	10	21
	12	93
26106-060602	2	25
26106-060652	2	26
26106-060752	4	53
26106-080122	3	14
	10	15
26106-080162	4	55
	5	14
	14	10
26106-080202	10	24
	16	33
26106-080302	3	15
26106-080402	4	33
26106-080452	3	16
26106-080502	3	17
	10	16
26106-100252	15	35
26106-100452	16	29
26206-100252	3	7
26206-100302	3	8
26306-080002	2	27
	6	6
26366-080002	12	69
26577-060122	10	11
26716-120002	11	90
26756-060002	12	70
		84
		94
26979-050162	4	32
27241-120000	1	13
27241-250000	10	12
719717-01561	1	1
719717-02901	1	28
719717-02911	1	31
719734-01510	2	4
719746-51350	11	1
719747-92600	17	1
977770-1207F	17	26
X0280210331	15	23
X0280335350	15	33
X0280626010	15	12
X0280996180	15	3
X0281007750	15	2
X0282005991	15	6

Parts No.	Fig. No.	Ref. No.
X0283006960	15	7
X0284105040	15	13
X0284525010	15	27
X0285007030	15	10
X0285105190	15	4
X0285205030	15	5
X0286105010	15	15
X0286305010	15	17
X0286355010	15	18
X0287405140	15	19
X0534007800	15	20
X1289510130	15	34
X4284001590	15	8
X9055715000	15	21
X9490065670	15	32
X9490138090	15	25
X9490138100	15	26
X9490138110	15	24
X9490423420	15	30
X9490560750	15	29
X9490561001	16	2
X9490562360	15	28
X9490721360	15	22
X9491034320	15	16
X9491034330	15	14
X9491040990	15	11
X9491050100	15	9

Parts No.	Fig. No.	Ref. No.

Parts No.	Fig. No.	Ref. No.