YANMAR

PARTS CATALOG

0CR10-M67900EN

Last update Nov., 2012

PREFACE

1.This Parts Catalog carries all parts incorporated in YANMAR Model 3TNV76-GGEP engine manufactured since October, 2006.

2.Each illustration corresponds to the parts list on the following page.

3.When ordering parts,clearly write down the engine model and serial number,as well as the name and number of each part in your order sheet. This will help insure reliable delivery of the parts you have ordered.

Directions for the Parts Catalog.

1.This Parts Catalog shows both standard and optional parts.
2.Parts may change without prior notice.
3.The following is an example of the Parts Catalog format.

0CF10-G21601 29. FUEL INJECTION PUMP(W/BOOST)

(A)=4JH-DT
(B)=4JH-DTZ
(C)=4JH-DTZP
(D)=4JH-DTZA
(E)=4JH-DTZY
(F)=

① REF.	② LEV.	PARTS NO.	DESCRIPTION	Q'TY (A)	(B)	(C)	(D)	(E)	(F)	③ I	⑤ R
1	1	729595-51390	FUEL INJECTION PUMP	1	1	1	1	1			1
1-1	1	729595-51391	FUEL INJECTION PUMP	1	1	1	1	1		N	1
	(A=E00185)	(B=E00200)									
3	2	26022-060162	SCREW M 6X 16	9	9	9	9	9			
3-1	④ 2	26022-060162	SCREW M 6X 16	4	4	4	4	4		K	
	(A=E00156)	(B=E00156)	(C=E00156) (D=E00156)	(E=E00156)							
4	2	129470-51040	CAMSHAFT	1	1	1	1	1			
5	2	122710-51050	BEARING, ROLLER	2	2	2	2	2			
6	2	129470-51060	RETAINER	1	1	1	1	1			

Remarks
(1) BOOST COMPEMSATOR TYPE. OPTIONAL PART, TO E00155,(4JH-DT, 4JH-DTZ

①Ref. No.

The Ref. No. listed may not be in accordance with the illustration Ref. No.

(Ex.) Illustration No. 1 List Ref No. 1 (Before change) → 1- 1 (After change)

For interchangeable symbols N, R and K, illustrations for new parts may be abbreviated.

②Lev. (Level)

Level indication
The numbers below indicate the level of relativity towards the main part.
1 ----- Main parts (Assembly parts)
2 ----- Sub component included in " 1 ".
3 ----- Sub component included in " 2 ".
Note) Parts that are not for sale are partially illustrated but not listed.

③Interchangeability Symbol

When a part change takes place, one of the following interchangeability symbols is indicated beside the part.

Symbol	Interchangeability	Contents note
N	Old ← Yes / No → New	New Part is interchangeable for Old Part but Old Part is not interchangeable for New Part.
Q	Old ← No / Yes → New	New Part is not interchangeable for Old Part but Old Part is interchangeable for New Part.
R	Old ← Yes / Yes → New	New/ Old Parts are both interchangeable.
S	Old ← No / No → New	New/ Old Parts are both not interchangeable.
W		Part newly added.
Z		Part discontinued.
F		Not interchangeable by a single part but interchangeable together with related parts.
K		Changes only for used parts quantities.

④Effective Machine No.

When a part changes, the effective Machine No. will be indicated in the (A)-(F) column.

Product Symbol	Product No.	Product Symbol	Product No.
C	Clutch No. Compressor No.	F	Machine No. (Agricultural Equip.)
D	Drive No.	M	Machine No.
E	Engine No.		

Note 1) A date may follow the symbol. (Ex.) 1996.01
Note 2) " XXXXX " and " ZZZZZ " are for parts that could not be predicted or for engine models that could not be identified.
Note 3) (A=E00185) is the E (Engine Serial Number) for the column (A) model (in this case 4JH-DT) after the parts design change.

⑤Remarks

Figures or alphabets (symbols) are entered in the remarks column.
The comments (remarks) on parts that are indicated at the bottom of the illustration are the same symbols as those stated above.

Contents

0CR10-M67900

Fig. No.	Fig. Name
ENGINE SECTION (3TNV76-GGEP)	
1.	CYLINDER BLOCK
2.	GEAR HOUSING
3.	FLYWHEEL HOUSING & OIL SUMP
4.	CYLINDER HEAD & BONNET
5.	AIR CLEANER
6.	EXHAUST MANIFOLD & SILENCER
7.	CAMSHAFT & DRIVING GEAR
8.	CRANKSHAFT & PISTON
9.	LUB.OIL SYSTEM
10.	COOLING WATER SYSTEM
11.	RADIATOR
12.	FUEL INJECTION PUMP
13.	GOVERNOR
14.	FUEL INJECTION VALVE
15.	FUEL LINE
16.	ENGINE CONTROL DEVICE
17.	STARTING MOTOR
18.	GENERATOR
19.	ELECTRIC PARTS
20.	GASKET SET

Fig.1. CYLINDER BLOCK

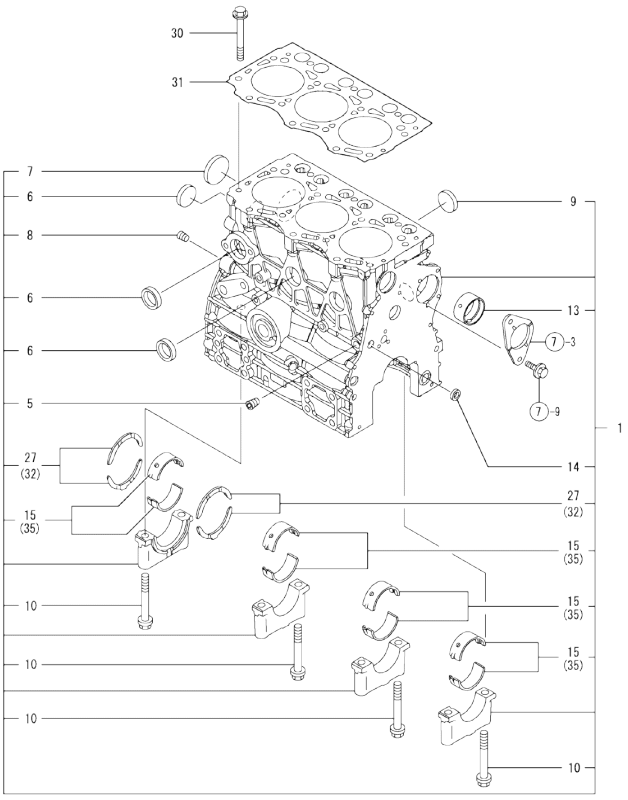

(A)=3TNV76-GGEP
(B)=
(C)=
(D)=
(E)=
(F)=

No.	Lev.	Parts No.	Description	Q'ty (A)	(B)	(C)	(D)	(E)	(F)	I	R
1	1	719717-01561	BLOCK ASSY, CYLINDER	1							
5	2	124060-01050	PLUG, PT1/8	1							
6	2	105311-01090	PLUG, 30	4							
7	2	119623-01250	PLUG, 45	1							
8	2	124160-01910	PLUG, PT1/4	1							
9	2	119285-01990	PLUG, 25	3							
10	2	119620-02020	BOLT, METAL CAP	8							
13	2	119717-02411	BUSH, CAMSHAFT	1							
14	2	27241-120000	PLUG, 12	1							
15	2	719717-02901	BEARING, MAIN	4							2
27	2	119717-02930	BEARING, THRUST	2							
30	1	119810-01200	BOLT, HEAD	14							
31	1	119717-01330	GASKET, HEAD	1							
32	1	119810-02941	BEARING, THRUST 0.25	2							1
35	1	719717-02911	BEARING, 0.25 US	4							3

Remarks
(1) OVER-SIZE(O.S=0.25)PART.
(2) REPAIR PART.
(3) UNDER-SIZE(U.S=0.25)PART.

N:Old $\frac{\text{Yes}}{\text{No}}$ New. Q:Old $\frac{\text{No}}{\text{Yes}}$ New. R:Old $\frac{\text{Yes}}{\text{Yes}}$ New. S:Old $\frac{\text{No}}{\text{No}}$ New. W:Add. Z:Discontinued. F:Interchangeable by set. K:Q'ty Change

Copyright (C) YANMAR CO., LTD. All RightsReserved.

Fig.2. GEAR HOUSING

(A)=3TNV76-GGEP
(B)=
(C)=
(D)=
(E)=
(F)=

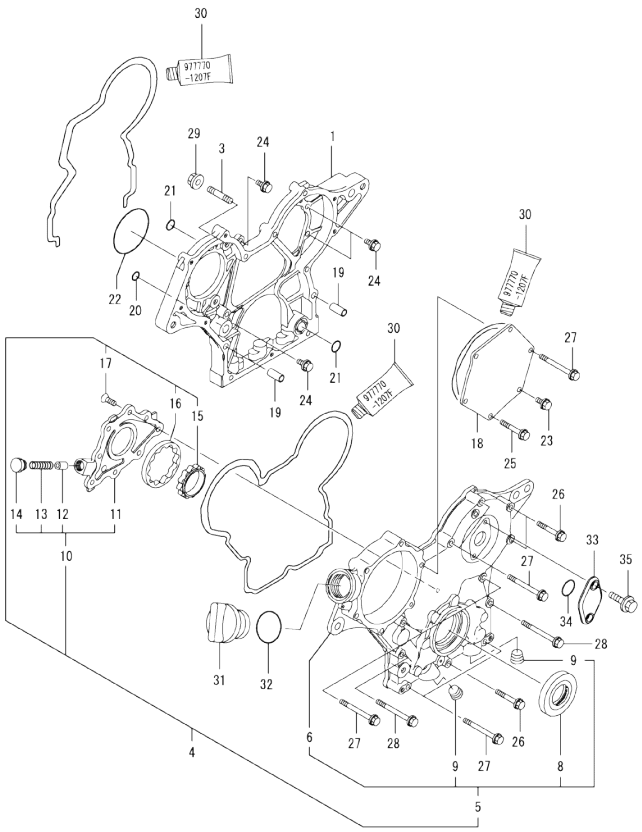

No.	Lev.	Parts No.	Description	Q'ty (A)	(B)	(C)	(D)	(E)	(F)	I	R
1	1	119717-01501	CASE, GEAR	1							
3	1	119717-01570	STUD	3							
4	1	119744-01590	COVER ASSY,GEAR CASE	1							
5	2	719744-01500	COVER ASSY,GEAR CASE	1							
6	3	119744-01521	COVER, GEAR CASE	1							
8	3	119620-01800	SEAL, OIL	1							
9	3	23876-030000	PLUG, R03	2							
10	2	119717-32100	COVER ASSY	1							
11	3	119717-32080	COVER	1							
12	3	129900-32130	VALVE, RELIEF	1							
13	3	129001-32320	SPRING	1							
14	3	129001-32330	PLUG	1							
15	2	119717-32110	ROTOR, INNER	1							
16	2	119717-32120	ROTOR, OUTER	1							
17	2	119802-32130	SCREW, M6X16	8							
18	1	119717-01750	COVER	1							
19	1	119660-01911	PIPE, KNOCK	4							
20	1	119624-32040	O-RING, P12.0	1							
21	1	119717-32050	O-RING, P17.0	3							
22	1	121850-51960	O-RING	1							
23	1	26106-060122	BOLT, M6X 12 PLATED	1							
24	1	26106-060162	BOLT, M6X 16 PLATED	4							
25	1	26106-060402	BOLT, M6X 40 PLATED	4							
26	1	26106-060402	BOLT, M6X 40 PLATED	3							
27	1	26106-060602	BOLT, M6X 60 PLATED	7							
28	1	26106-060652	BOLT, M6X 65 PLATED	2							
29	1	26306-080002	NUT, M8	3							
30	1	977770-1207F	GASKET.LIQUID	1							1
31	1	124160-01751	COVER, FILLER	1							
32	1	24311-000320	O-RING, 1AP32.0	1							
33	1	121023-01551	COVER	1							
34	1	24341-000240	O-RING, 1AS24.0	1							
35	1	26106-060162	BOLT, M6X 16 PLATED	2							

Remarks
(1) OPTIONAL PART.

N:Old ◄Yes/No► New. Q:Old ◄No/Yes► New. R:Old ◄Yes/Yes► New. S:Old ◄No/No► New. W:Add. Z:Discontinued. F:Interchangeable by set. K:Q'ty Change

Copyright (C) YANMAR CO., LTD. All RightsReserved.

Fig.3. FLYWHEEL HOUSING & OIL SUMP

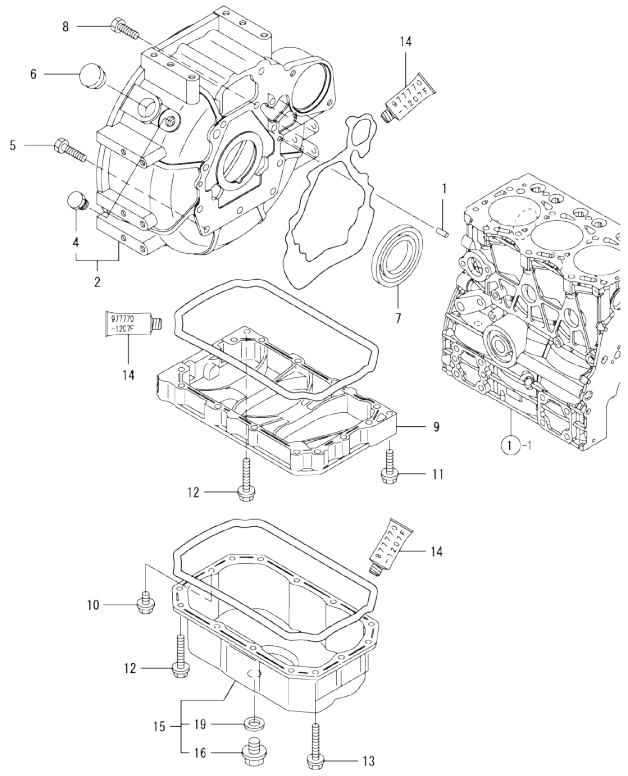

(A)=3TNV76-GGEP
(B)=
(C)=
(D)=
(E)=
(F)=

No.	Lev.	Parts No.	Description	Q'ty (A)	(B)	(C)	(D)	(E)	(F)	I	R
1	1	129100-01580	PIN, M8X16	2							
2	1	119717-01611	HOUSING, FLYWHEEL	1							
4	2	129486-35210	PLUG, 3/4-16UNF	1							
5	1	121120-01620	BOLT, M10X28	3							
6	1	119620-01750	CAP	1							
7	1	124085-02220	SEAL, OIL	1							
8	1	26206-100252	BOLT, M10X 25 PLATED	8							
9	1	119717-01720	SPACER, OIL SUMP	1							
10	1	26106-080122	BOLT, M8X 12 PLATED	1							
11	1	26106-080302	BOLT, M8X 30 PLATED	1							
12	1	26106-080452	BOLT, M8X 45 PLATED	11							
13	1	26106-080502	BOLT, M8X 50 PLATED	3							
14	1	977770-1207F	GASKET.LIQUID	1							1
15	1	119717-01770	SUMP ASSY, OIL	1							
16	2	105425-01690	PLUG, 16	1							
19	2	22190-160002	WASHER, SEAL 16	1							

Remarks
(1) OPTIONAL PART.

N:Old $\xleftarrow[\text{No}]{\text{Yes}}$ New. Q:Old $\xleftarrow[\text{Yes}]{\text{No}}$ New. R:Old $\xleftarrow[\text{Yes}]{\text{Yes}}$ New. S:Old $\xleftarrow[\text{No}]{\text{No}}$ New. W:Add. Z:Discontinued. F:Interchangeable by set. K:Q'ty Change

Copyright (C) YANMAR CO., LTD. All RightsReserved.

Fig.4. CYLINDER HEAD & BONNET

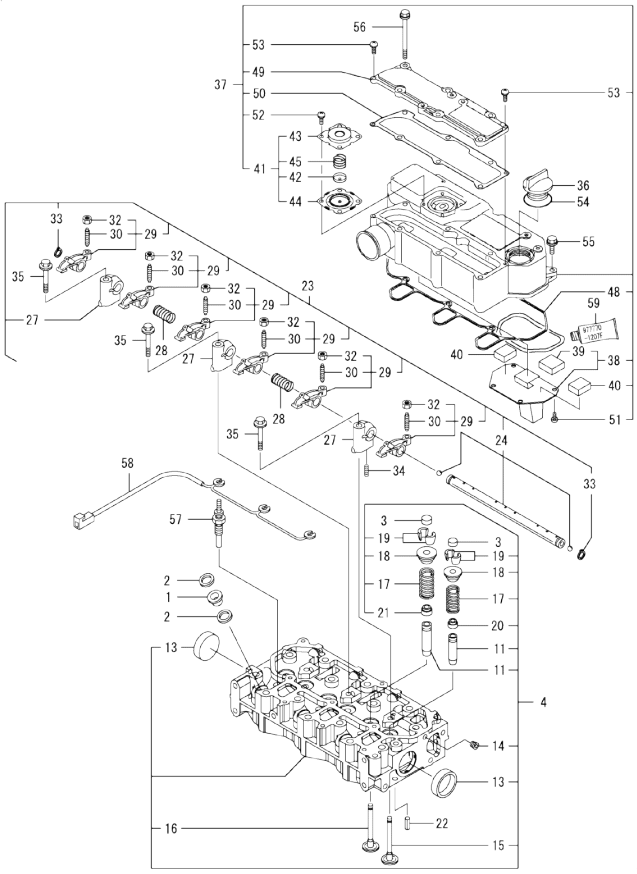

(A)=3TNV76-GGEP
(B)=
(C)=
(D)=
(E)=
(F)=

No.	Lev.	Parts No.	Description	Q'ty (A)	(B)	(C)	(D)	(E)	(F)	I	R
1	1	129901-11450	PROTECTOR, NOZZLE	3							
2	1	119600-11460	GASKET, NOZZLE	6							
3	1	105010-11490	CAP, VALVE	6							
4	1	119717-11740	HEAD ASSY, CYLINDER	1							
11	2	119717-11800	GUIDE, VALVE	6							1
13	2	119285-11990	PLUG, 35	2							
14	2	23876-005000	PLUG, R005	1							
15	2	119717-11101	VALVE, INTAKE	3							
16	2	119717-11110	VALVE, EXHAUST	3							
17	2	119717-11131	SPRING, VALVE	6							
18	2	129508-11180	RETAINER, SPRING	6							
19	2	119717-11190	COTTER	12							
20	2	119717-11340	SEAL, VALVE STEM	3							
21	2	119717-11350	SEAL, VALVE STEM	3							
22	1	22351-060012	PIN, SPRING 6.0X12	2							
23	1	119717-11200	SUPPORT ASSY, ARM	1							
24	2	119717-11240	SHAFT ASSY, ROCKER	1							
27	2	119717-11260	SUPPORT, ROCKER ARM	3							
28	2	119620-11280	SPRING	2							
29	2	119717-11650	ARM, ROCKER	6							
30	3	129150-11230	SCREW, VALVE ADJUST	6							
32	3	129150-11750	NUT, M8	6							
33	2	22242-000120	RING, 12	2							
34	2	26979-050162	SCREW, M5X16	1							
35	1	26106-080402	BOLT, M8X 40 PLATED	3							
36	1	124160-01751	COVER, FILLER	1							
37	1	119717-11381	BONNET ASSY, HEAD	1							
38	2	119717-03031	PLATE	1							
39	3	119717-03070	BAFFLE, BREATHER	1							
40	2	119717-03070	BAFFLE, BREATHER	2							
41	2	119802-03100	DIAPHRAGM ASSY	1							
42	3	119802-03110	PLATE	1							
43	3	119802-03121	COVER, DIAPHRAGM	1							
44	3	119802-03131	DIAPHRAGM	1							
45	3	119802-03141	SPRING, DIAPHRAGM	1							
48	2	119718-11310	GASKET, BONNET	1							
49	2	119717-11320	COVER, BONNET	1							
50	2	119717-11331	GASKET	1							
51	2	22857-500100	SCREW, 5X10	4							
52	2	22857-500100	SCREW, 5X10	4							
53	2	22857-500160	SCREW, 5X16	2							
54	1	24311-000320	O-RING, 1AP32.0	1							
55	1	26106-060202	BOLT, M6X 20 PLATED	3							
56	1	26106-060752	BOLT, M6X 75 PLATED	6							
57	1	119717-77800	PLUG, GLOW	3							
58	1	119717-77820	CONNECTOR, GLOW PLUG	1							
59	1	977770-1207F	GASKET.LIQUID	1							2

Remarks
(1) REPAIR PART.
(2) OPTIONAL PART.

N:Old $\xleftarrow[\text{No}]{\text{Yes}}$ New. Q:Old $\xleftarrow[\text{Yes}]{\text{No}}$ New, R:Old $\xleftarrow[\text{Yes}]{\text{Yes}}$ New. S:Old $\xleftarrow[\text{No}]{\text{No}}$ New. W:Add. Z:Discontinued. F:Interchangeable by set. K:Q'ty Change

Copyright (C) YANMAR CO., LTD. All RightsReserved.

Fig.5. AIR CLEANER

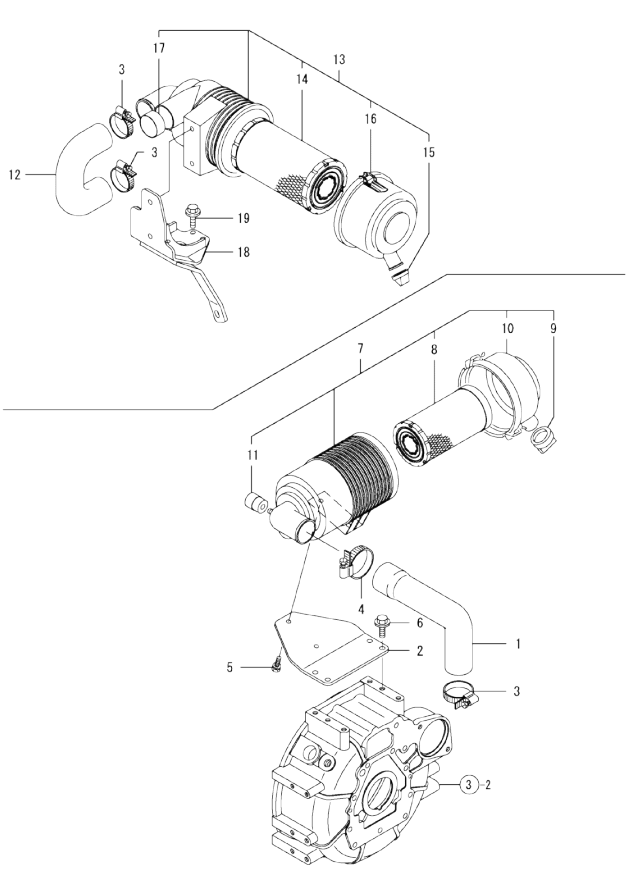

Remarks
* THIS FIGURE(AIR CLEANER ASSY)IS
OPTIONAL PART.

(A)=3TNV76-GGEP (D)=
(B)= (E)=
(C)= (F)=

No.	Lev.	Parts No.	Description	Q'ty (A)	(B)	(C)	(D)	(E)	(F)	I	R
1	1	119746-12550	PIPE, AIR INTAKE	1							
2	1	119746-12600	BRACKET, AIR CLEANER	1							
3	1	23000-054000	CLAMP, 54	2							
4	1	23000-060000	CLAMP, 60	1							
5	1	26013-080162	BOLT, M8X 16	2							
6	1	26106-100182	BOLT, M10X 18 PLATED	4							
7	1	119746-12510	CLEANER ASSY, AIR	1							
8	2	129004-12520	ELEMENT 5INCH	1							
9	2	119808-12540	VALVE, UNLOADER	1							
10	2	119866-12541	COVER ASSY	1							
11	2	126650-12680	INDICATOR	1							
12	1	119761-12020	PIPE, AIR INTAKE	1							
13	1	119515-12501	CLEANER ASSY, AIR	1							
14	2	119515-12520	ELEMENT	1							
15	2	119808-12540	VALVE, UNLOADER	1							
16	2	119336-12570	COVER ASSY	1							
17	2	105027-12580	RING	1							
18	1	119761-12540	SUPPORT, AIR CLEANER	1							
19	1	26106-060162	BOLT, M6X 16 PLATED	3							

N:Old ◄Yes/No► New. Q:Old ◄No/Yes► New, R:Old ◄Yes/Yes► New, S:Old ◄No/No► New, W:Add, Z:Discontinued, F:Interchangeable by set, K:Q'ty Change

Copyright (C) YANMAR CO., LTD. All RightsReserved.

Fig.6. EXHAUST MANIFOLD & SILENCER

(A)=3TNV76-GGEP
(B)=
(C)=
(D)=
(E)=
(F)=

No.	Lev.	Parts No.	Description	Q'ty (A)	(B)	(C)	(D)	(E)	(F)	I	R
1	1	119717-13109	MANIFOLD, EXHAUST	1							
2	1	119717-13110	GASKET	1							
3	1	119717-13600	STUD, M8X50	2							
4	1	119802-13620	BOLT, M8X50	2							
5	1	119131-18320	STUD, M8X22	4							
6	1	26306-080002	NUT, M8	2							
7	1	119515-13200	GASKET, SILENCER	1							
8	1	119515-13200	GASKET, SILENCER	2							1
9	1	119717-13550	SILENCER	1							1
10	1	129005-13600	PIPE ASSY, TAIL	1							1
11	2	119358-13640	CAP, RAIN	1							1
12	2	121855-13821	SPACER, A	1							1
13	2	121855-13830	SPACER, B	2							1
14	2	123500-13840	SPACER, C	1							1
15	2	26106-060402	BOLT, M6X 40 PLATED	1							1
16	2	26347-040002	NUT, M4	1							1
17	2	26347-060002	NUT, M6	1							1
18	2	26557-040352	SCREW, M4X35	1							1
19	1	26106-080252	BOLT, M8X 25 PLATED	2							1
20	1	26306-080002	NUT, M8	4							1
21	1	26306-080002	NUT, M8	4							1
22	1	114220-07130	LABEL, HOT SURFACE	1						W	
	(A=EXXXXX)										

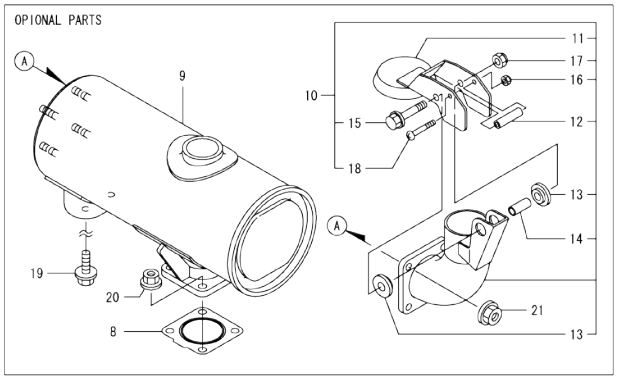

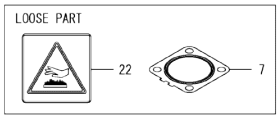

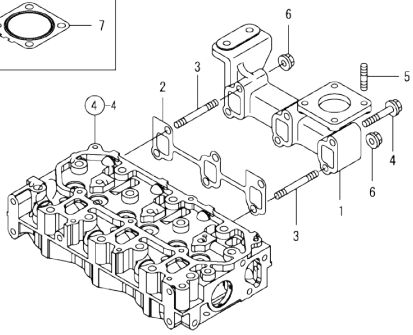

Remarks
(1) OPTIONAL PART.

N:Old ←Yes/No→ New. Q:Old ←No/Yes→ New. R:Old ←Yes/Yes→ New. S:Old ←No/No→ New. W:Add. Z:Discontinued. F:Interchangeable by set. K:Q'ty Change

Copyright (C) YANMAR CO., LTD. All RightsReserved.

Fig.7. CAMSHAFT & DRIVING GEAR

(A)=3TNV76-GGEP
(B)=
(C)=
(D)=
(E)=
(F)=

No.	Lev.	Parts No.	Description	Q'ty (A)	(B)	(C)	(D)	(E)	(F)	I	R
1	1	119620-14200	TAPPET	6							
2	1	119717-14400	ROD, PUSH	6							
3	1	119717-14581	CAMSHAFT ASSY	1							
9	1	26106-060122	BOLT, M6X 12 PLATED	2							
10	1	119717-25050	SHAFT, IDLE	1							
11	1	119717-25101	GEAR ASSY, IDLE	1							
14	1	26106-060352	BOLT, M6X 35 PLATED	3							
15	1	129150-25301	BOLT	4							
16	1	119717-25930	GEAR, PUMP	1							
17	1	119717-51150	FLANGE	1							
18	1	22217-120000	WASHER, SPRING 12	1							
19	1	26716-120002	NUT, M12	1							

N:Old ←Yes/No→ New. Q:Old ←No/Yes→ New. R:Old ←Yes/Yes→ New. S:Old ←No/No→ New. W:Add. Z:Discontinued. F:Interchangeable by set. K:Q'ty Change

Copyright (C) YANMAR CO., LTD. All RightsReserved.

Fig.8. CRANKSHAFT & PISTON

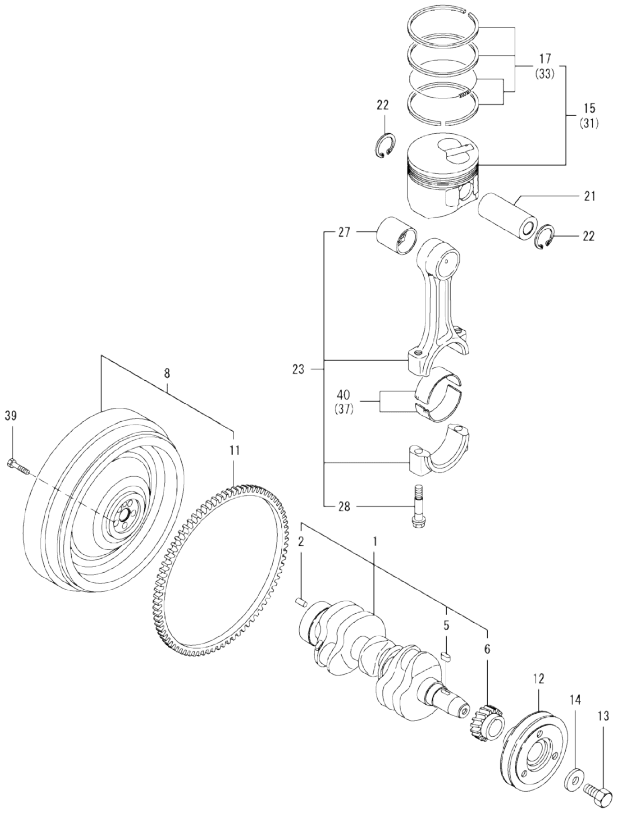

(A)=3TNV76-GGEP
(B)=
(C)=
(D)=
(E)=
(F)=

No.	Lev.	Parts No.	Description	Q'ty (A)	(B)	(C)	(D)	(E)	(F)	I	R
1	1	119717-21700	CRANKSHAFT ASSY	1							
2	2	129100-01580	PIN, M8X16	1							
5	2	22512-040120	KEY, 4X 12	1							
6	2	119717-21200	GEAR, CRANKSHAFT	1							
8	1	119746-21570	FLYWHEEL ASSY	1							
11	2	119865-21600	GEAR, RING	1							
12	1	119717-21650	V-PULLEY	1							
13	1	119621-21680	BOLT, FLANGE 12X1.25	1							
14	1	119620-21941	WASHER	1							
15	1	119717-22080	PISTON ASSY	3							
17	2	119717-22500	RING SET, PISTON	3							
21	1	119717-22300	PIN, PISTON	3							
22	1	22252-000220	RING, 22	6							
23	1	119717-23000	ROD ASSY, CONNECTING	3							
27	2	119717-23910	BEARING, PISTON PIN	3							2
28	2	119717-23200	BOLT, CONNECTING ROD	6							
31	1	119717-22090	PISTON ASSY, 0.25 OS	3							1
33	2	119717-22550	RING SET, 0.25 OS	3							1
37	1	119717-23611	METAL ASSY, 0.25	3							3
39	1	121111-21501	BOLT, FLYWHEEL	5							
40	1	119717-23601	BEARING, CRANK PIN	3							

Remarks
(1) OVER-SIZE(O.S=0.25)PART.
(2) REPAIR PART.
(3) UNDER-SIZE(U.S=0.25)PART.

N:Old ←Yes/No→ New. Q:Old ←No/Yes→ New. R:Old ←Yes/Yes→ New. S:Old ←No/No→ New. W:Add. Z:Discontinued. F:Interchangeable by set. K:Q'ty Change

Copyright (C) YANMAR CO., LTD. All RightsReserved.

Fig.9. LUB.OIL SYSTEM

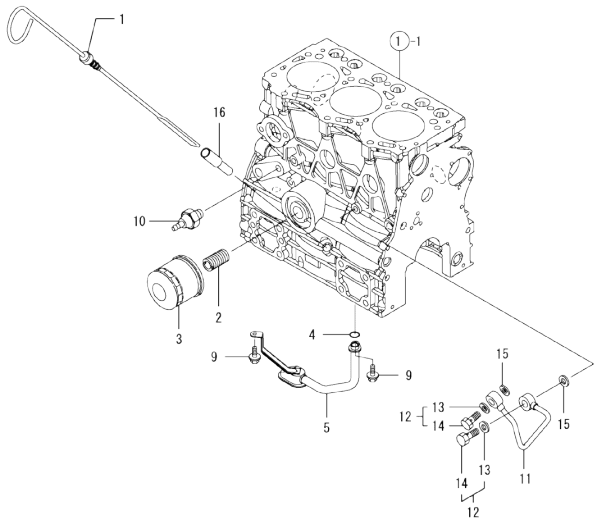

(A)=3TNV76-GGEP
(B)=
(C)=
(D)=
(E)=
(F)=

No.	Lev.	Parts No.	Description	Q'ty (A)	(B)	(C)	(D)	(E)	(F)	I	R
1	1	119717-34801	DIPSTICK, OIL	1							
2	1	129100-35140	STUD	1							
3	1	119305-35170	FILTER ASSY, D68XL65	1							1
4	1	119717-32060	O-RING, P15.0	1							
5	1	119717-35080	PIPE ASSY, OIL INLET	1							
9	1	26106-060102	BOLT, M6X 10 PLATED	2							
10	1	114250-39450	SWITCH, 0.5KG	1							
11	1	119717-39210	PIPE, OIL	1							
12	1	129005-59830	BOLT ASSY, JOINT M8	2							
13	2	22190-080002	WASHER, SEAL 6	2							
14	2	23857-030000	BOLT, JOINT 3	2							
15	1	22190-080002	WASHER, SEAL 6	2							
16	1	121520-34810	GUIDE, DIPSTICK	1							

Remarks
(1) REPAIR PART.

N:Old ←Yes/No→ New. Q:Old ←No/Yes→ New. R:Old ←Yes/Yes→ New. S:Old ←No/No→ New. W:Add. Z:Discontinued. F:Interchangeable by set. K:Q'ty Change

Copyright (C) YANMAR CO., LTD. All RightsReserved.

Fig.10. COOLING WATER SYSTEM

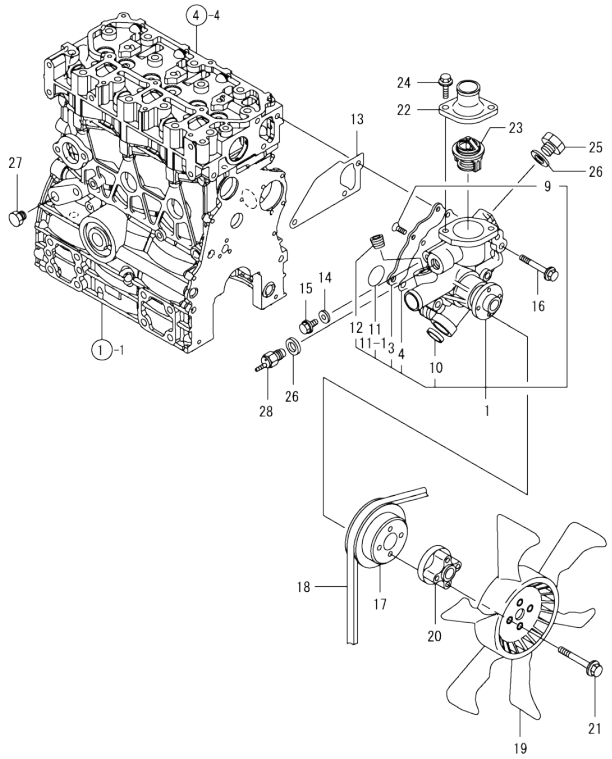

(A)=3TNV76-GGEP (D)=
(B)= (E)=
(C)= (F)=

No.	Lev.	Parts No.	Description	Q'ty (A)	(B)	(C)	(D)	(E)	(F)	I	R
1	1	119717-42002	PUMP ASSY, WATER	1							
1-1	1	119E10-42000	PUMP ASSY, WATER	1						N	
	(A=EE4590)										
3	2	119717-42041	COVER	1							
4	2	119717-42031	GASKET	1							
9	2	26577-060122	SCREW, M6X12	4							
10	2	27241-250000	PLUG, 25	1							
11	2	119717-42320	O-RING, P26	1							
11-1	2	119C10-42320	O-RING, 2028	1						S	
	(A=EE4590)										
12	2	129916-49740	PLUG, R3/8	1							
13	1	119717-42020	GASKET, WATER PUMP	1							
14	1	23414-080000	GASKET, 8X1.0	1							
15	1	26106-080122	BOLT, M8X 12 PLATED	1							
16	1	26106-080502	BOLT, M8X 50 PLATED	3							
17	1	119717-42350	V-PULLEY, D=100	1							
18	1	25132-003600	V-BELT, A36	1							
19	1	171340-44740	FAN, COOLING D335XNF	1							
20	1	129457-44760	SPACER, FAN	1							
21	1	26106-060452	BOLT, M6X 45 PLATED	4							
22	1	129350-49530	COVER, THERMOSTAT	1							
23	1	119717-49800	THERMOSTAT, 71C	1							
24	1	26106-080202	BOLT, M8X 20 PLATED	2							
25	1	121450-42450	PLUG, M16	1							
26	1	124465-44950	GASKET, 16	2							
27	1	171056-49120	PLUG, DRAIN R1/4	1							
28	1	121250-44901	SWITCH, THERMO 110	1							

N:Old ←Yes/No→ New. Q:Old ←No/Yes→ New. R:Old ←Yes/Yes→ New. S:Old ←No/No→ New. W:Add. Z:Discontinued. F:Interchangeable by set. K:Q'ty Change

Copyright (C) YANMAR CO., LTD. All RightsReserved.

Fig.11. RADIATOR

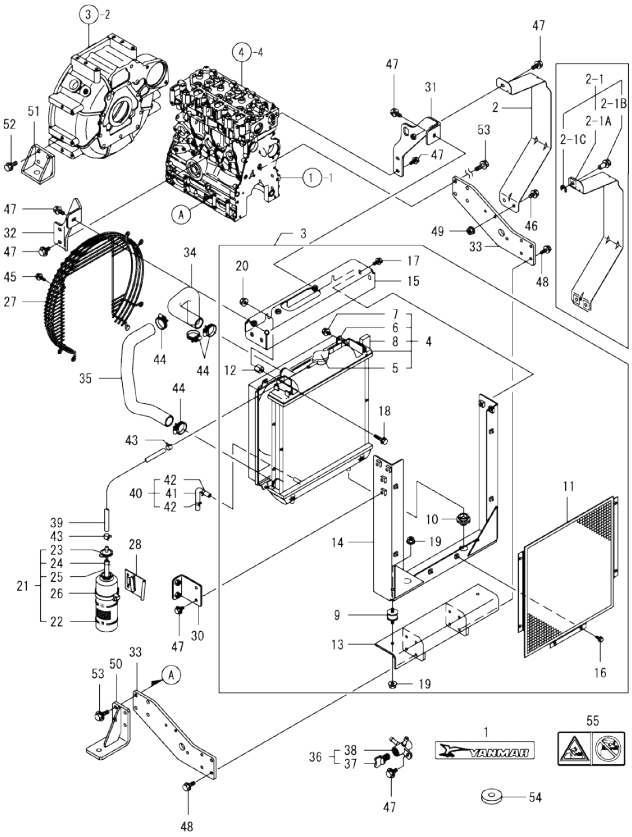

(A)=3TNV76-GGEP (D)=
(B)= (E)=
(C)= (F)=

No.	Lev.	Parts No.	Description	Q'ty (A)	(B)	(C)	(D)	(E)	(F)	I	R
1	1	129247-07000	LABEL,YANMAR	1							
2	1	119746-42800	COVER	1							
2-1	1	119746-42810	COVER CMP,V-BELT	1						N	
	(A=EXXXXX)										
2-1A	1	119746-42801	COVER,V-BELT	1						W	
	(A=EXXXXX)										
2-1B	1	119746-42820	SCREW,V-BELT COVER	3						W	
	(A=EXXXXX)										
2-1C	1	22276-000060	RING, E- 6	3						W	
	(A=EXXXXX)										
3	1	119746-44500	RADIATOR ASSY	1							
4	2	119802-44500	RADIATOR ASSY	1							
5	3	129107-44590	CAP, RADIATOR	1							
6	3	119802-44600	SHROUD	1							
7	3	26014-060122	BOLT, M6X 12	4							
8	3	119515-44610	GASKET	2							
9	2	121400-44640	ABSORBER	2							
10	2	119255-44660	ABSORBER	2							
11	2	119746-44800	SCREEN, RADIATOR	1							
12	2	119746-44890	SPACER	2							
13	2	119746-44960	BRACKET, RADIATOR	1							
14	2	119746-44970	BRACKET, RADIATOR	1							
15	2	119746-44980	BRACKET, RADIATOR	1							
16	2	26106-060162	BOLT, M6X 16 PLATED	6							
17	2	26106-080162	BOLT, M8X 16 PLATED	4							
18	2	26106-080354	BOLT, M8X 35 PLATED	1							
19	2	26366-080002	NUT, M8	4							
20	2	26366-080002	NUT, M8	2							
21	1	124450-44510	TANK ASSY, SUB	1							
22	2	124450-44520	BODY, TANK	1							
23	2	124450-44530	CAP	1							
24	2	124450-44560	RETAINER	1							
25	2	23061-070230	PIPE, 7X 230	1							
26	1	124450-44550	BAND	1							
27	1	119802-44560	GUARD	1							
28	1	121256-44600	BRACKET, SUB TANK	1							
30	1	129946-44900	BRACKET, SUB TANK	1							
31	1	119746-44910	STAY, MUFFLER A	1							
32	1	119746-44920	STAY, MUFFLER B	1							
33	1	119746-44950	BRACKET, RADIATOR	2							
34	1	119802-49010	PIPE, WATER	1							
35	1	119802-49020	PIPE, WATER	1							
36	1	129550-49101	COCK ASSY, 2-WAY	1							
37	2	129150-49081	COCK, DRAIN	1							
38	2	129550-49090	BODY, 2-WAY COCK	1							
39	1	124579-49160	PIPE, WATER DRAIN	1							
40	1	129210-49320	PIPE, WATER DRAIN	1							
41	2	129209-49200	PIPE, WATER DRAIN	1							
42	2	124766-59050	CLIP, HOSE 12	2							
43	1	124766-59050	CLIP, HOSE 12	2							
44	1	23000-035000	CLAMP, 35	4							

Remarks
* THIS FIGURE(RADITOR ASSY)IS
OPTIONAL PART.

N:Old ←Yes/No→ New. Q:Old ←No/Yes→ New. R:Old ←Yes/Yes→ New. S:Old ←No/No→ New. W:Add. Z:Discontinued. F:Interchangeable by set. K:Q'ty Change

++ CONTINUE ++

Copyright (C) YANMAR CO., LTD. All RightsReserved.

Fig.11. RADIATOR

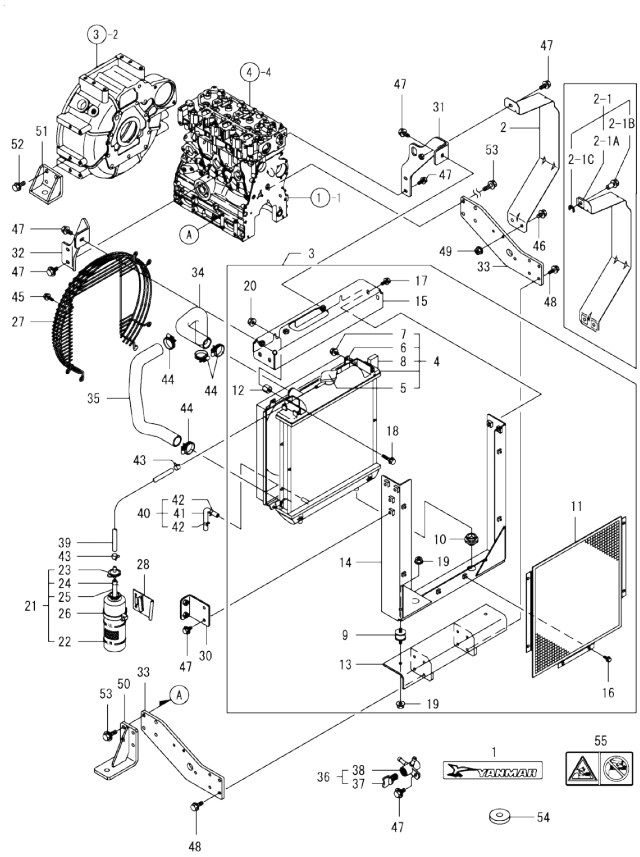

Remarks
* THIS FIGURE(RADITOR ASSY)IS
OPTIONAL PART.

(A)=3TNV76-GGEP (D)=
(B)= (E)=
(C)= (F)=

No.	Lev.	Parts No.	Description	Q'ty (A)	(B)	(C)	(D)	(E)	(F)	I	R
45	1	26106-060162	BOLT, M6X 16 PLATED	8							
46	1	26106-080122	BOLT, M8X 12 PLATED	2							
46-1	1	26106-080122	BOLT, M8X 12 PLATED	1						K	
	(A=EXXXXX)										
47	1	26106-080162	BOLT, M8X 16 PLATED	10							
47-1	1	26106-080162	BOLT, M8X 16 PLATED	9						K	
	(A=EXXXXX)										
48	1	26106-080202	BOLT, M8X 20 PLATED	8							
49	1	26366-080002	NUT, M8	2							
50	1	119746-08100	FOOT	2							
51	1	119888-08110	FOOT	2							
52	1	26106-100202	BOLT, M10X 20 PLATED	8							
53	1	26106-100302	BOLT, M10X 30 PLATED	8							
54	1	119746-44900	SPACER	1							
55	1	129946-07000	LABEL, NO OPEN	1						W	
	(A=EXXXXX)										

N:Old ←Yes/No→ New. Q:Old ←No/Yes→ New. R:Old ←Yes/Yes→ New. S:Old ←No/No→ New. W:Add. Z:Discontinued. F:Interchangeable by set. K:Q'ty Change

Copyright (C) YANMAR CO., LTD. All RightsReserved.

Fig.12. FUEL INJECTION PUMP

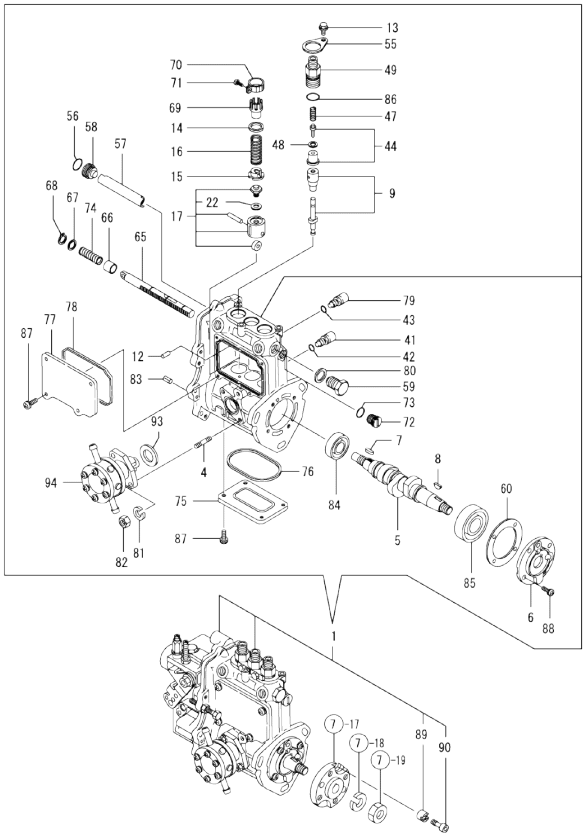

Remarks
(1) GOVERNOR ASSY(FIG.13) IS INCORPORATED IN THIS FOP.CMP (REF.NO.1).

(A)=3TNV76-GGEP (D)=
(B)= (E)=
(C)= (F)=

No.	Lev.	Parts No.	Description	Q'ty (A)	(B)	(C)	(D)	(E)	(F)	I	R
1	1	719746-51350	PUMP ASSY, INJECTION	1							1
4	2	129155-51020	STUD	2							
5	2	119717-51030	CAMSHAFT	1							
6	2	119717-51060	SUPPORT, CAMSHAFT	1							
7	2	119717-51070	KEY	1							
8	2	122710-51090	KEY	1							
9	2	119717-51100	PLUNGER ASSY	3							
12	2	129155-51140	PIN	3							
13	2	26106-050102	BOLT, M5X 10 PLATED	3							
14	2	158600-51170	RETAINER, SPRING	3							
15	2	119717-51570	RETAINER, SPRING	3							
16	2	119717-51190	SPRING, PLUNGER	3							
17	2	119717-51200	TAPPET ASSY	3							
22	3	129155-51600	SHIM SET, ADJUSTING	1							
41	2	158600-51270	STOPPER, TAPPET	3							
42	2	129155-51280	O-RING, S6	3							
43	2	129155-51280	O-RING, S6	1							
44	2	119717-51300	VALVE ASSY, DELIVERY	3							
47	2	119717-51330	SPRING, DELIVERY	3							
48	2	124550-51350	GASKET, DELIVERY	3							
49	2	158600-51442	VALVE ASSY, DELIVERY	3							
55	2	118400-51370	LOCKING	3							
56	2	119717-51420	O-RING	1							
57	2	129155-51400	DEFLECTOR	1							
58	2	158600-51410	PLUG, DEFLECTOR	1							
59	2	158600-51420	PLUG, DEFLECTOR	1							
60	2	129155-51450	SHIM SET, ADJUSTING	1							
65	2	119717-51500	RACK, CONTROL	1							
66	2	129155-51521	BUSH, RACK	1							
67	2	129155-51530	SPACER	1							
68	2	129155-51540	CIRCLIP	1							
69	2	129155-51550	PINION, CONTROL	3							
70	2	129100-51560	PINION	3							
71	2	129100-51570	SCREW	3							
72	2	158600-51570	PLUG	1							
73	2	129155-51580	O-RING	1							
74	2	129155-51591	SPRING, RACK	1							
75	2	129155-51701	COVER	1							
76	2	119717-51711	GASKET	1							
77	2	119717-51750	COVER	1							
78	2	119717-51761	GASKET	1							
79	2	158600-51790	STOOPER, RACK	1							
80	2	22190-160002	WASHER, SEAL 16	1							
81	2	22217-060000	WASHER, SPRING 6	2							
82	2	26716-060002	NUT, M6	2							
83	2	22351-050010	PIN, SPRING 5.0X10	2							
84	2	24101-060034	BEARING, BALL 6003	1							
85	2	24101-063034	BEARING, BALL 6303	1							
86	2	24316-000150	O-RING, 4DP15.0	3							
87	2	26022-050122	SCREW, M5X12	8							
88	2	26022-060162	SCREW, M6X16	4							

N:Old ←Yes/No→ New. Q:Old ←No/Yes→ New. R:Old ←Yes/Yes→ New. S:Old ←No/No→ New. W:Add. Z:Discontinued. F:Interchangeable by set. K:Q'ty Change

++ CONTINUE ++

Copyright (C) YANMAR CO., LTD. All RightsReserved.

Fig.12. FUEL INJECTION PUMP

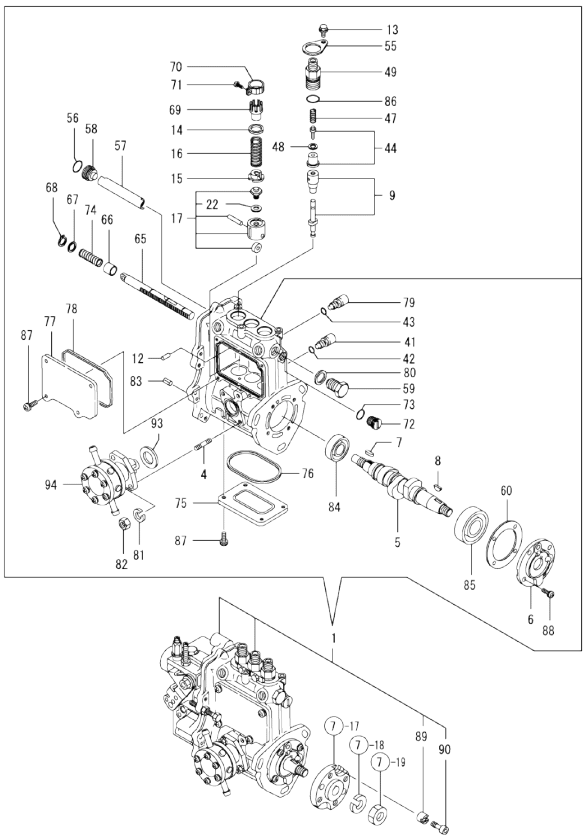

Remarks
(1) GOVERNOR ASSY(FIG.13) IS INCORPORATED IN THIS FOP.CMP (REF.NO.1).

(A)=3TNV76-GGEP (D)=
(B)= (E)=
(C)= (F)=

No.	Lev.	Parts No.	Description	Q'ty (A)	(B)	(C)	(D)	(E)	(F)	I	R
89	2	119717-51480	COLLAR	1							
90	2	119717-51490	BOLT	1							
93	2	129155-52051	GASKET	1							
94	2	129100-52101	PUMP ASSY, FUEL FEED	1							

N:Old ←Yes/No→ New. Q:Old ←No/Yes→ New. R:Old ←Yes/Yes→ New. S:Old ←No/No→ New. W:Add. Z:Discontinued. F:Interchangeable by set. K:Q'ty Change

Copyright (C) YANMAR CO., LTD. All RightsReserved.

Fig.13. GOVERNOR

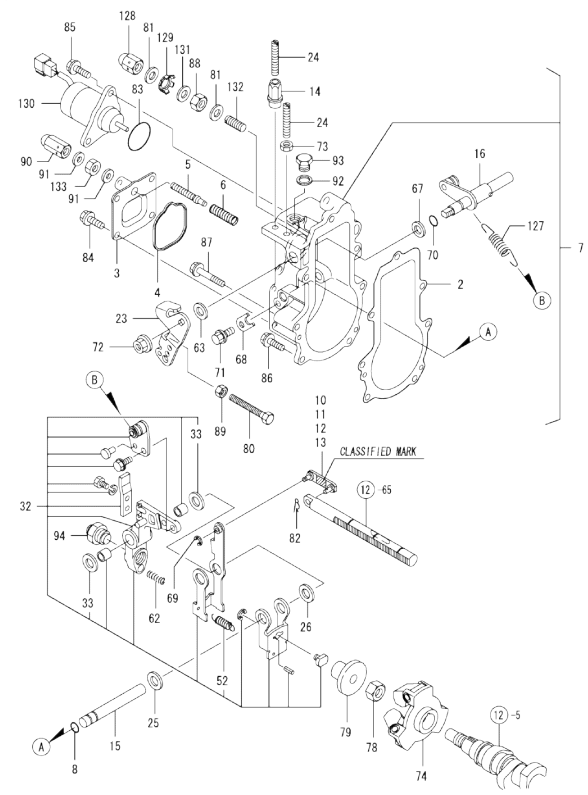

Remarks
(1) SELECTIVE PARTS: CERTAIN THE CLASSIFICATION MARK, THEN PLACE YOUR ORDER.(REF. TO ILLUSTRATION)
* THIS FIGURE(GOVERNOR ASSY)IS INCORPORATED IN THE FUEL INJECTION PUMP ASSY(FIG.12).

(A)=3TNV76-GGEP (D)=
(B)= (E)=
(C)= (F)=

No.	Lev.	Parts No.	Description	Q'ty (A)	(B)	(C)	(D)	(E)	(F)	I	R
2	2	119717-61050	GASKET	1							
3	2	119746-61060	COVER, GOVERNOR CASE	1							
4	2	119717-61070	GASKET	1							
5	2	119645-61070	SCREW	1							
6	2	119746-61080	SPRING	1							
7	2	119746-61100	CASE ASSY, GOVERNOR	1							
8	3	129155-51280	O-RING, S6	1							
10	3	119717-61120	LINK, MARK :3	1							1
11	3	119717-61130	LINK, MARK 98	1							1
12	3	119717-61140	LINK, MARK 88	1							1
13	3	119717-61150	LINK, MARK 03	1							1
14	3	129209-61370	NUT, M6	1							
15	3	129052-61390	SHAFT	1							
16	3	119717-61400	SHAFT ASSY	1							
23	3	119746-61440	LEVER, CONTROL	1							
24	3	129155-61450	BOLT, LIMITER	2							
25	3	129156-61460	SHIM, T=0.6	1							
26	3	129155-61480	SPACER ASSY	1							
32	3	119746-61500	LEVER ASSY, GOVERNOR	1							
33	4	174307-51700	SHIM SET	2							
52	4	129486-61540	SPRING, SET	1							
62	3	129486-61650	SPRING, STARTING	1							
63	3	158552-61700	SHIM SET	1							
67	3	158552-61710	SHIM, T=1.0	1							
68	3	119660-61901	RETAINER, SHAFT	1							
69	3	22272-000030	RING, E- 3	1							
70	3	24341-000070	O-RING, 1AS7.0	1							
71	3	26106-060102	BOLT, M6X 10 PLATED	1							
72	3	26366-080002	NUT, M8	1							
73	3	26756-060002	NUT, LOCK M6	1							
74	2	119717-61200	WEIGHT ASSY,GOVERNOR	1							
78	2	119660-61300	NUT	1							
79	2	129155-61341	SLEEVE	1							
80	2	129155-61460	BOLT, IDLE	1							
81	2	22190-120002	WASHER, SEAL 12	2							
82	2	22372-040000	PIN, SNAP 4	1							
83	2	158552-61900	O-RING	1							
84	2	26106-060102	BOLT, M6X 10 PLATED	4							
85	2	26106-060142	BOLT, M6X 14 PLATED	2							
86	2	26106-060202	BOLT, M6X 20 PLATED	4							
87	2	26106-060452	BOLT, M6X 45 PLATED	3							
88	2	26736-120002	NUT, M12	1							
89	2	26756-060002	NUT, LOCK M6	1							
90	2	119600-66840	NUT, CAP	1							
91	2	22190-060003	SEAL WASER 6	2							
92	2	22190-100002	WASHER, SEAL 10	1							
93	2	23887-100002	PLUG, 10	1							
94	2	119746-61550	ANGLEICH ASSY	1							
127	2	119746-61700	SPRING, GOVERNOR	1							
128	2	129209-61930	NUT, CAP	1							
129	2	129209-61970	PLATE	1							

N:Old ←Yes/No→ New. Q:Old ←No/Yes→ New. R:Old ←Yes/Yes→ New. S:Old ←No/No→ New. W:Add. Z:Discontinued. F:Interchangeable by set. K:Q'ty Change

++ CONTINUE ++

Copyright (C) YANMAR CO., LTD. All RightsReserved.

Fig.13. GOVERNOR

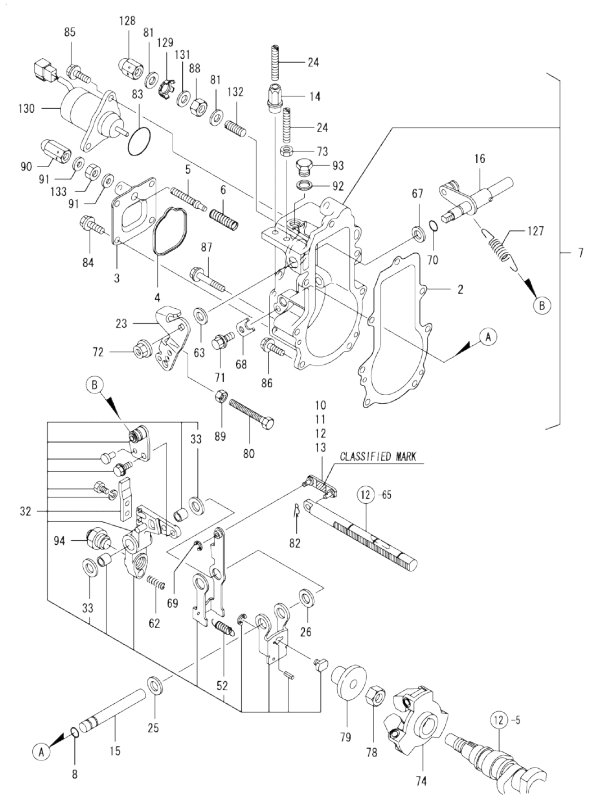

Remarks
(1) SELECTIVE PARTS: CERTAIN THE CLASSIFICATION MARK, THEN PLACE YOUR ORDER.(REF. TO ILLUSTRATION)
* THIS FIGURE(GOVERNOR ASSY)IS INCORPORATED IN THE FUEL INJECTION PUMP ASSY(FIG.12).

(A)=3TNV76-GGEP
(B)=
(C)=
(D)=
(E)=
(F)=

No.	Lev.	Parts No.	Description	Q'ty (A)	(B)	(C)	(D)	(E)	(F)	I	R
130	2	119653-77950	SOLENOID, STOP	1							
131	2	23414-120016	GASKET, 12X1.0	1							
132	2	129155-61470	BOLT, CONTROL	1							
133	2	26756-060002	NUT, LOCK M6	1							

N:Old ←Yes/No→ New. Q:Old ←No/Yes→ New. R:Old ←Yes/Yes→ New. S:Old ←No/No→ New. W:Add. Z:Discontinued. F:Interchangeable by set. K:Q'ty Change

Copyright (C) YANMAR CO., LTD. All RightsReserved.

Fig.14. FUEL INJECTION VALVE

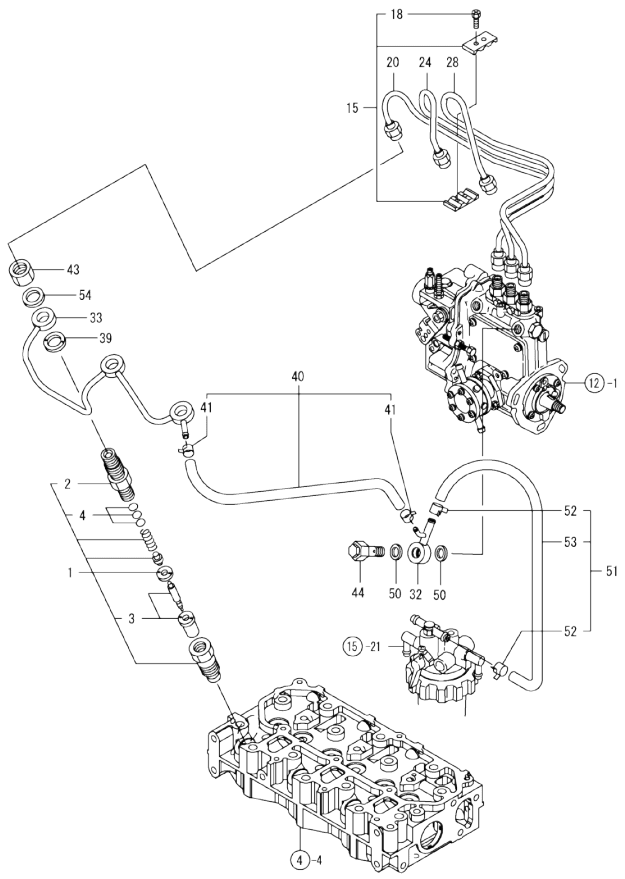

Remarks
(1) REPAIR PART.

(A)=3TNV76-GGEP (D)=
(B)= (E)=
(C)= (F)=

No.	Lev.	Parts No.	Description	Q'ty (A)	(B)	(C)	(D)	(E)	(F)	I	R
1	1	119717-53001	VALVE ASSY,INJECTION	3							
2	2	118200-53010	HOLDER, NOZZLE	3							
3	2	119717-53010	VALVE ASSY,INJECTION	3							
4	2	129901-53800	SHIM SET, ADJUSTING	3							1
15	1	129150-59120	RETAINER, PIPE	1							
18	2	129150-59131	BOLT, M4X14	2							
20	1	119717-59810	PIPE ASSY, INJECTION	1							
24	1	119717-59820	PIPE ASSY, INJECTION	1							
28	1	119717-59830	PIPE ASSY, INJECTION	1							
32	1	119840-59570	JOINT	1							
33	1	119717-59510	PIPE ASSY, RETURN	1							
39	1	129901-59560	GASKET	3							
40	1	119540-59570	PIPE ASSY, RETURN	1							
41	2	124066-59100	CLIP, HOSE 8	2							
43	1	119620-59700	NUT, NOZZLE	3							
44	1	119813-59950	VALVE ASSY, CHECK	1							
50	1	22190-120002	WASHER, SEAL 12	2							
51	1	129210-59170	PIPE ASSY, FUEL	1							
52	2	124766-59050	CLIP, HOSE 12	2							
53	2	105225-59511	PIPE, FUEL	1							
54	1	22190-120002	WASHER, SEAL 12	3							

N:Old ←Yes/No→ New. Q:Old ←No/Yes→ New. R:Old ←Yes/Yes→ New. S:Old ←No/No→ New. W:Add. Z:Discontinued. F:Interchangeable by set. K:Q'ty Change

Copyright (C) YANMAR CO., LTD. All RightsReserved.

Fig.15. FUEL LINE

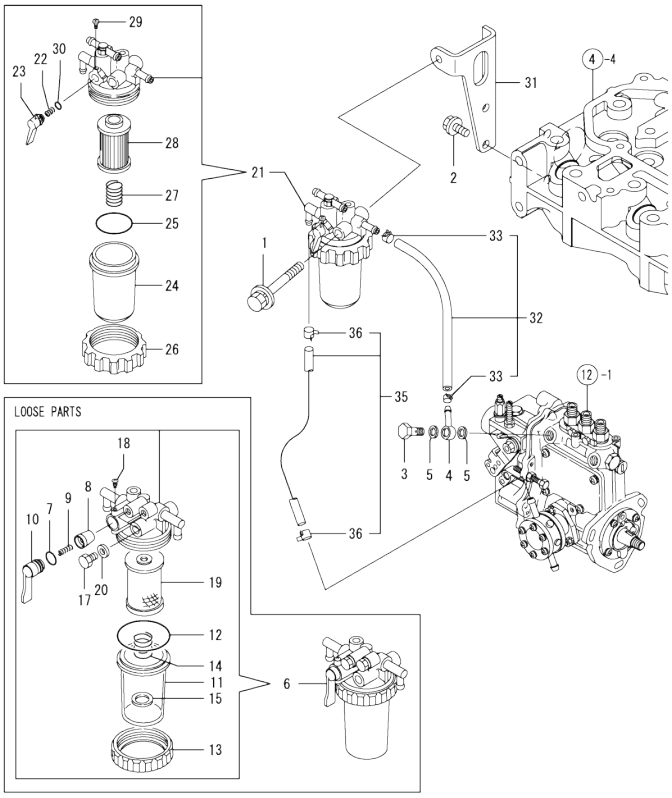

(A)=3TNV76-GGEP (D)=
(B)= (E)=
(C)= (F)=

No.	Lev.	Parts No.	Description	Q'ty (A)	(B)	(C)	(D)	(E)	(F)	I	R
1	1	26014-080702	BOLT, M8X 70	1							
2	1	26106-080162	BOLT, M8X 16 PLATED	2							
3	1	103854-39140	BOLT, PIPE JOINT	1							
4	1	101304-59020	JOINT, PIPE 12	1							
5	1	22190-120002	WASHER, SEAL 12	2							
6	1	129335-55700	SEPARATOR ASSY,WATER	1							
7	2	24311-240100	O-RING, 1AP10A	1							
8	2	104200-55321	VALVE, TAPER	1							
9	2	104200-55330	SPRING, VALVE	1							
10	2	104200-55341	HANDLE	1							
11	2	124064-55510	COVER	1							
12	2	102103-55520	O-RING	1							
13	2	110250-55610	RING, RETAINING	1							
14	2	121257-55720	SPRING	1							
15	2	121257-55731	FLOAT	1							
17	2	101720-55750	PLUG, 6	2							
18	2	104200-55750	SCREW, M4	1							
19	2	171081-55910	SCREEN	1							
20	2	23418-060000	GASKET, 6X1.0	2							
21	1	119833-55620	FILTER ASSY, FUEL	1							
22	2	104200-55330	SPRING, VALVE	1							
23	2	119810-55340	LEVER	1							
24	2	121254-55510	COVER	1							
25	2	102103-55520	O-RING	1							
26	2	110250-55610	RING, RETAINING	1							
27	2	121250-55620	SPRING	1							
28	2	119810-55650	ELEMENT	1							
29	2	104200-55750	SCREW, M4	1							
30	2	24311-240100	O-RING, 1AP10A	1							
31	1	119717-55650	BRACKET, FILTER	1							
32	1	129210-59080	PIPE ASSY, FUEL	1							
33	2	124766-59050	CLIP, HOSE 12	2							
35	1	129210-59170	PIPE ASSY, FUEL	1							
36	2	124766-59050	CLIP, HOSE 12	2							

N:Old ←Yes/No→ New. Q:Old ←No/Yes→ New. R:Old ←Yes/Yes→ New. S:Old ←No/No→ New. W:Add. Z:Discontinued. F:Interchangeable by set. K:Q'ty Change

Copyright (C) YANMAR CO., LTD. All RightsReserved.

Fig.16. ENGINE CONTROL DEVICE

(A)=3TNV76-GGEP
(B)=
(C)=
(D)=
(E)=
(F)=

No.	Lev.	Parts No.	Description	Q'ty (A)	(B)	(C)	(D)	(E)	(F)	I	R
1	1	119746-66120	LINK, ENGINE CONTROL	1							
2	1	26756-050002	NUT, LOCK M5	3							
3	1	119888-66161	CONTROLLER ASSY	1							
4	2	126650-66020	HANDLE, REGULATOR	1							
5	2	119888-66111	BRACKET	1							
6	2	119888-66130	PIVOT	1							
7	2	171048-67010	CONTROLLER ASSY	1							
8	3	171102-66080	WASHER	1							
9	3	104200-66820	SPRING	1							
10	3	104200-66831	PLATE, FRICTION	2							
11	3	104200-66850	WASHER	1							
12	3	104200-66860	NUT	1							
13	3	171085-67100	BRACKET	1							
14	3	171085-67110	SHAFT, DRIVE	1							
15	3	171085-67120	GEAR	1							
16	3	171048-67130	LEVER	1							
17	3	171048-67140	STOPPER	1							
18	3	22351-020006	PIN, SPRING 2.0X 6	1							
19	3	22411-200150	COTTER PIN	1							
20	3	26116-060082	BOLT, M6X 8 PLATED	1							
21	3	26921-050122	SCREW, M5X12	1							
22	2	170064-67210	LABEL, HANDLE	1							
23	2	22117-060000	WASHER, 6	1							
24	2	22137-100000	WASHER, 10	1							
25	2	22217-100000	WASHER, SPRING 10	1							
26	2	22272-000050	RING, E- 5	1							
27	2	26106-060102	BOLT, M6X 10 PLATED	2							
28	2	26657-100002	NUT, CAP M10	1							
29	1	26106-080162	BOLT, M8X 16 PLATED	2							

Remarks
* THIS FIGURE(ENGINE CONTROL DEVICE) ASSY)IS OPTIONAL PART.

N:Old ◄Yes/No► New. Q:Old ◄No/Yes► New, R:Old ◄Yes/Yes► New, S:Old ◄No/No► New, W:Add, Z:Discontinued, F:Interchangeable by set, K:Q'ty Change

Copyright (C) YANMAR CO., LTD. All RightsReserved.

Fig.17. STARTING MOTOR

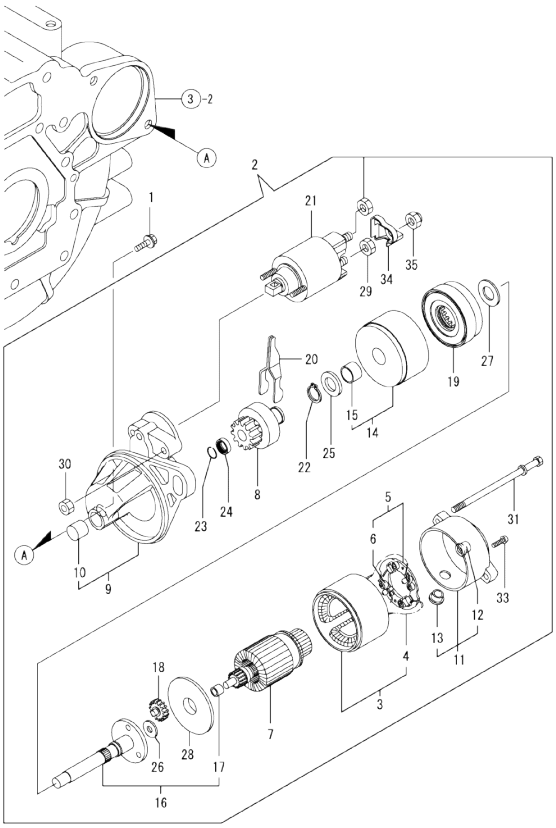

(A)=3TNV76-GGEP
(B)=
(C)=
(D)=
(E)=
(F)=

No.	Lev.	Parts No.	Description	Q'ty (A)	(B)	(C)	(D)	(E)	(F)	I	R
1	1	26106-100252	BOLT, M10X 25 PLATED	2							
2	1	119717-77010	STARTER, P1.1	1							
3	2	X0281007750	YOKE ASSY	1							
4	3	X0280996180	STARTER KIT	2							
5	2	X0285105190	HOLDER ASSY	1							
6	3	X0285205030	SPRING	4							
7	2	X0282005991	ARMATURE ASSY	1							
8	2	X0283006960	CLUTCH ASSY	1							
9	2	X4284001590	HOUSING ASSY,STARTER	1							
10	3	X9491050100	BEARING, NEEDLE	1							
11	2	X0285007030	FRAME ASSY.	1							
12	3	X9491040990	BEARING	1							
13	3	X0280626010	COVER	1							
14	2	X0284105040	BEARING ASSY	1							
15	3	X9491034330	BEARING	1							
16	2	X0286105010	SHAFT ASSY	1							
17	3	X9491034320	BEARING	1							
18	2	X0286305010	GEAR	3							
19	2	X0286355010	GEAR	1							
20	2	X0287405140	LEVER	1							
21	2	X0534007800	SWITCH ASSY	1							
22	2	X9055715000	RING	1							
23	2	X9490721360	RING	1							
24	2	X0280210331	NUT	1							
25	2	X9490138110	WASHER	1							
26	2	X9490138090	WASHER	1							
27	2	X9490138100	WASHER	1							
28	2	X0284525010	PLATE	1							
29	2	X9490562360	NUT	1							
30	2	X9490560750	NUT	2							
31	2	X9490423420	BOLT, THROUGH	2							
33	2	X9490065670	SCREW, M4X6	2							
34	2	X0280335350	COVER, TERMINAL	1							
35	2	X1289510130	NUT	1							

Remarks
(1) OPTIONAL PARTS.

N:Old $\frac{\text{Yes}}{\text{No}}$ New. Q:Old $\frac{\text{No}}{\text{Yes}}$ New. R:Old $\frac{\text{Yes}}{\text{Yes}}$ New. S:Old $\frac{\text{No}}{\text{No}}$ New. W:Add. Z:Discontinued. F:Interchangeable by set. K:Q'ty Change

Copyright (C) YANMAR CO., LTD. All RightsReserved.

Fig.18. GENERATOR

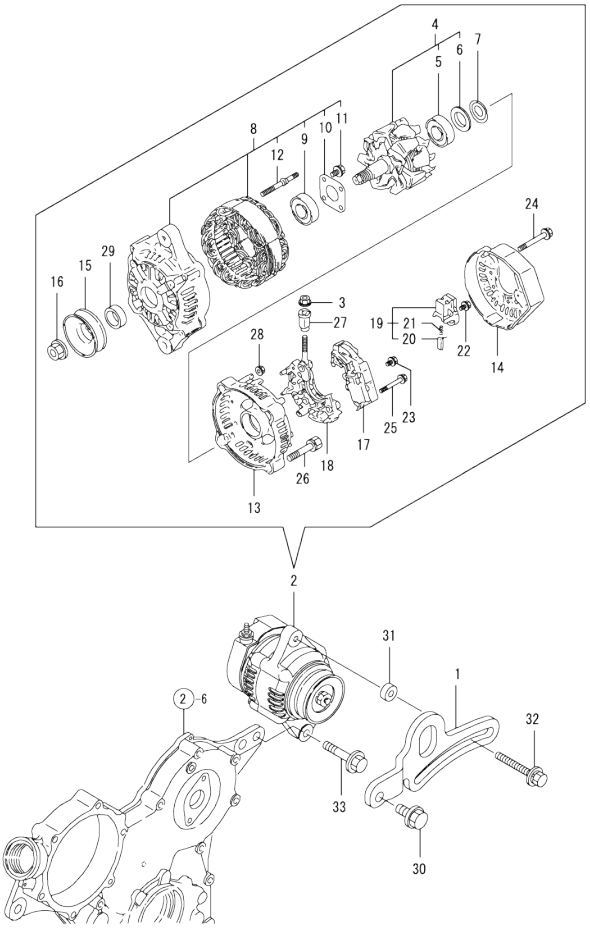

(A)=3TNV76-GGEP (D)=
(B)= (E)=
(C)= (F)=

No.	Lev.	Parts No.	Description	Q'ty (A)	(B)	(C)	(D)	(E)	(F)	I	R
1	1	119734-77310	ADJUSTER	1							
2	1	129423-77200	GENERATOR, 12V-40A	1							
3	2	X9490561001	NUT	1							
4	2	119620-77380	ROTOR ASSY	1							
5	3	119620-79240	BALL BEARING	1							
6	3	119620-79250	COVER, BEARING	1							
7	2	119620-79360	WASHER, THRUST	1							
8	2	119620-77421	FRAME ASSY, DRIVE	1							
9	3	119620-79200	BALL BEARING	1							
10	3	119620-79210	PLATE	1							
11	3	119620-79220	SCREW	4							
12	3	119620-79230	BOLT, STUD	2							
13	2	119620-77440	FLAME ASSY, REAR	1							
14	2	129240-79300	COVER	1							
15	2	119620-77461	PULLEY	1							
16	2	119620-77471	NUT	1							
17	2	129423-77710	REGULATOR ASSY	1							
18	2	119620-79260	HOLDER	1							
19	2	119620-79270	HOLDER, BRUSH	1							
20	3	119620-77480	BRUSH ASSY	2							
21	3	119620-79280	SPRING	2							
22	2	119620-79290	SCREW	6							
23	2	119620-79300	SCREW	1							
24	2	119620-79310	BOLT	3							
25	2	119620-79320	SCREW W/WASHER	2							
26	2	119620-79330	BOLT	2							
27	2	119620-79340	INSULATION BUSH	1							
28	2	119620-79350	NUT	2							
29	2	119620-77490	COLLAR	1							
30	1	26106-080202	BOLT, M8X 20 PLATED	1							
31	1	119940-77270	SPACER, GENERATOR	1							
32	1	129972-77341	BOLT, ADJUSTER L=50	1							
33	1	26106-100452	BOLT, M10X 45 PLATED	1							

N:Old ←Yes/No→ New. Q:Old ←No/Yes→ New. R:Old ←Yes/Yes→ New. S:Old ←No/No→ New. W:Add. Z:Discontinued. F:Interchangeable by set. K:Q'ty Change

Copyright (C) YANMAR CO., LTD. All RightsReserved.

Fig.19. ELECTRIC PARTS

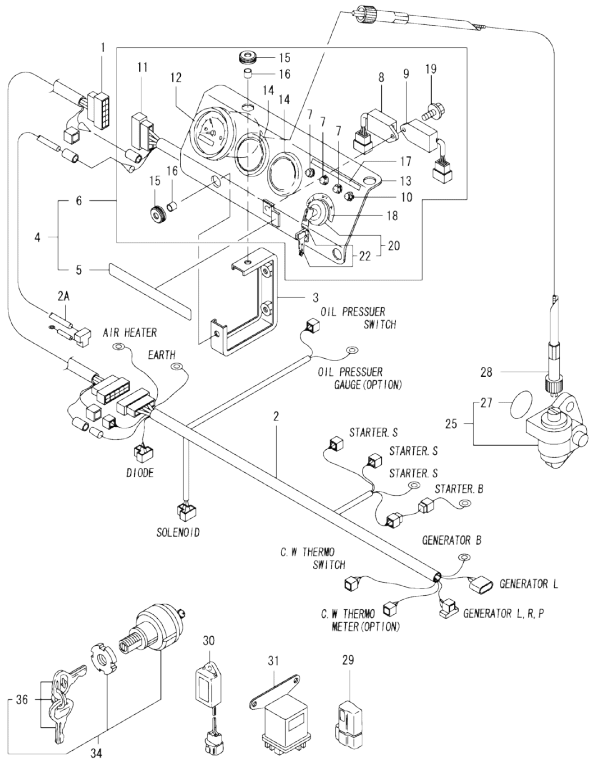

(A)=3TNV76-GGEP
(B)=
(C)=
(D)=
(E)=
(F)=

No.	Lev.	Parts No.	Description	Q'ty (A)	(B)	(C)	(D)	(E)	(F)	I	R
1	1	119946-91010	CORD, EXTENSION	1							
2	1	119888-91026	HARNESS, WIRE	1							
2-1	1	119888-91027	HARNESS, WIRE	1						N	
2A	(A=*2008.10.) 1 (A=EZZZZZ)	119946-91020	CORD, EXTENSION	1						W	
3	1	119888-91120	SUPPORT	2							
4	1	119888-91302	PANEL ASSY	1							
5	2	104507-07190	LABEL, YANMAR	1							
6	2	119888-91321	PANEL ASSY	1							
7	3	124732-77720	LAMP, CHARGING	3							
8	3	128300-77920	TIMER	1							
9	3	129211-77920	TIMER	1							
10	3	124559-77971	LAMP, PILOT	1							
11	3	119888-91032	HARNESS, WIRE	1							
12	3	171082-91100	TACHOMETER	1							
13	3	119888-91110	BODY, PANEL	1							
14	3	124770-91220	COVER	2							
15	3	121400-91520	ABSORBER	4							
16	3	121400-91530	SPACER	4							
17	3	119888-91610	LABEL, CW & OIL LAMP	1							
18	3	119888-91620	LABEL, KEY SWITCH	1							
19	3	26106-060102	BOLT, M6X 10 PLATED	1							
20	3	933110-00100	SWITCH ASSY, STARTER	1							
22	4	933110-00301	KEY ASSY	2							
25	1	129150-91400	GEAR	1							
27	2	24341-000240	O-RING, 1AS24.0	1							
28	1	124737-91420	CABLE, TACHOMETER	1							
29	1	119643-66900	DIODE	1							
30	1	129211-77920	TIMER	1							
31	1	119650-77910	RELAY ASSY, GLOW	1							
34	1	933110-00100	SWITCH ASSY, STARTER	1							
36	2	933110-00301	KEY ASSY	1							

Remarks
* THIS FIGURE(ELECTRIC PARTS ASSY)IS OPTIONAL PART.

N:Old ←Yes/No→ New. Q:Old ←No/Yes→ New. R:Old ←Yes/Yes→ New. S:Old ←No/No→ New. W:Add. Z:Discontinued. F:Interchangeable by set. K:Q'ty Change

Copyright (C) YANMAR CO., LTD. All RightsReserved.

Fig.20. GASKET SET

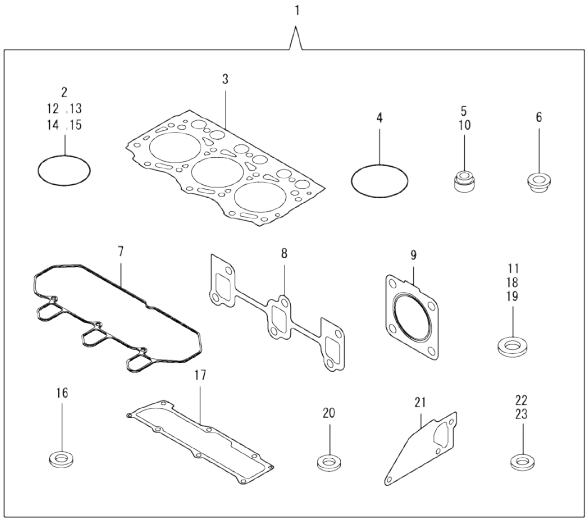

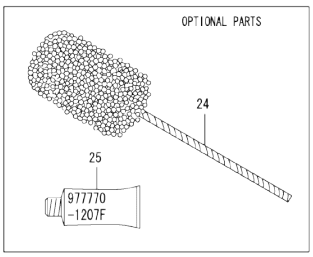

(A)=3TNV76-GGEP (D)=
(B)= (E)=
(C)= (F)=

No.	Lev.	Parts No.	Description	Q'ty (A)	(B)	(C)	(D)	(E)	(F)	I	R
1	1	719717-92820	GASKET SET	1							1
2	2	24341-000240	O-RING, 1AS24.0	1							
3	2	119717-01330	GASKET, HEAD	1							
4	2	121850-51960	O-RING	1							
5	2	119717-11340	SEAL, VALVE STEM	3							
6	2	129901-11450	PROTECTOR, NOZZLE	3							
7	2	119718-11310	GASKET, BONNET	1							
8	2	119717-13110	GASKET	1							
9	2	119515-13200	GASKET, SILENCER	3							
10	2	119717-11350	SEAL, VALVE STEM	3							
11	2	22190-080002	WASHER, SEAL 6	4							
12	2	24311-000320	O-RING, 1AP32.0	2							
13	2	119717-32060	O-RING, P15.0	1							
14	2	119624-32040	O-RING, P12.0	1							
15	2	119717-32050	O-RING, P17.0	3							
16	2	119600-11460	GASKET, NOZZLE	6							
17	2	119717-11331	GASKET	1							
18	2	124465-44950	GASKET, 16	2							
19	2	22190-120002	WASHER, SEAL 12	7							
20	2	129901-59560	GASKET	3							
21	2	119717-42020	GASKET, WATER PUMP	1							
22	2	23414-080000	GASKET, 8X1.0	1							
23	2	22190-160002	WASHER, SEAL 16	1							
24	1	129400-92420	FLEX HORN	1							1
25	1	977770-1207F	GASKET.LIQUID	1							1

Remarks
(1) OPTIONAL PARTS.

N:Old ←Yes/No→ New. Q:Old ←No/Yes→ New. R:Old ←Yes/Yes→ New. S:Old ←No/No→ New. W:Add. Z:Discontinued. F:Interchangeable by set. K:Q'ty Change

Copyright (C) YANMAR CO., LTD. All RightsReserved.

Parts No. Index

Parts No.	Fig. No.	Ref. No.
101304-59020	15	4
101720-55750	15	17
102103-55520	15	12
		25
103854-39140	15	3
104200-55321	15	8
104200-55330	15	9
		22
104200-55341	15	10
104200-55750	15	18
		29
104200-66820	16	9
104200-66831	16	10
104200-66850	16	11
104200-66860	16	12
104507-07190	19	5
105010-11490	4	3
105027-12580	5	17
105225-59511	14	53
105311-01090	1	6
105425-01690	3	16
110250-55610	15	13
		26
114220-07130	6	22
114250-39450	9	10
118200-53010	14	2
118400-51370	12	55
119131-18320	6	5
119255-44660	11	10
119285-01990	1	9
119285-11990	4	13
119305-35170	9	3
119336-12570	5	16
119358-13640	6	11
119515-12501	5	13
119515-12520	5	14
119515-13200	6	7
		8
	20	9
119515-44610	11	8
119540-59570	14	40
119600-11460	4	2
	20	16
119600-66840	13	90
119620-01750	3	6
119620-01800	2	8
119620-02020	1	10
119620-11280	4	28
119620-14200	7	1
119620-21941	8	14

Parts No.	Fig. No.	Ref. No.
119620-59700	14	43
119620-77380	18	4
119620-77421	18	8
119620-77440	18	13
119620-77461	18	15
119620-77471	18	16
119620-77480	18	20
119620-77490	18	29
119620-79200	18	9
119620-79210	18	10
119620-79220	18	11
119620-79230	18	12
119620-79240	18	5
119620-79250	18	6
119620-79260	18	18
119620-79270	18	19
119620-79280	18	21
119620-79290	18	22
119620-79300	18	23
119620-79310	18	24
119620-79320	18	25
119620-79330	18	26
119620-79340	18	27
119620-79350	18	28
119620-79360	18	7
119621-21680	8	13
119623-01250	1	7
119624-32040	2	20
	20	14
119643-66900	19	29
119645-61070	13	5
119650-77910	19	31
119653-77950	13	130
119660-01911	2	19
119660-61300	13	78
119660-61901	13	68
119717-01330	1	31
	20	3
119717-01501	2	1
119717-01570	2	3
119717-01611	3	2
119717-01720	3	9
119717-01750	2	18
119717-01770	3	15
119717-02411	1	13
119717-02930	1	27
119717-03031	4	38
119717-03070	4	39
		40
119717-11101	4	15

Parts No.	Fig. No.	Ref. No.
119717-11110	4	16
119717-11131	4	17
119717-11190	4	19
119717-11200	4	23
119717-11240	4	24
119717-11260	4	27
119717-11320	4	49
119717-11331	4	50
	20	17
119717-11340	4	20
	20	5
119717-11350	4	21
	20	10
119717-11381	4	37
119717-11650	4	29
119717-11740	4	4
119717-11800	4	11
119717-13109	6	1
119717-13110	6	2
	20	8
119717-13550	6	9
119717-13600	6	3
119717-14400	7	2
119717-14581	7	3
119717-21200	8	6
119717-21650	8	12
119717-21700	8	1
119717-22080	8	15
119717-22090	8	31
119717-22300	8	21
119717-22500	8	17
119717-22550	8	33
119717-23000	8	23
119717-23200	8	28
119717-23601	8	40
119717-23611	8	37
119717-23910	8	27
119717-25050	7	10
119717-25101	7	11
119717-25930	7	16
119717-32050	2	21
	20	15
119717-32060	9	4
	20	13
119717-32080	2	11
119717-32100	2	10
119717-32110	2	15
119717-32120	2	16
119717-34801	9	1
119717-35080	9	5

Parts No.	Fig. No.	Ref. No.
119717-39210	9	11
119717-42002	10	1
119717-42020	10	13
	20	21
119717-42031	10	4
119717-42041	10	3
119717-42320	10	11
119717-42350	10	17
119717-49800	10	23
119717-51030	12	5
119717-51060	12	6
119717-51070	12	7
119717-51100	12	9
119717-51150	7	17
119717-51190	12	16
119717-51200	12	17
119717-51300	12	44
119717-51330	12	47
119717-51420	12	56
119717-51480	12	89
119717-51490	12	90
119717-51500	12	65
119717-51570	12	15
119717-51711	12	76
119717-51750	12	77
119717-51761	12	78
119717-53001	14	1
119717-53010	14	3
119717-55650	15	31
119717-59510	14	33
119717-59810	14	20
119717-59820	14	24
119717-59830	14	28
119717-61050	13	2
119717-61070	13	4
119717-61120	13	10
119717-61130	13	11
119717-61140	13	12
119717-61150	13	13
119717-61200	13	74
119717-61400	13	16
119717-77010	17	2
119717-77800	4	57
119717-77820	4	58
119718-11310	4	48
	20	7
119734-77310	18	1
119744-01521	2	6
119744-01590	2	4
119746-08100	11	50

Parts No. Index

Parts No.	Fig. No.	Ref. No.
119746-12510	5	7
119746-12550	5	1
119746-12600	5	2
119746-21570	8	8
119746-42800	11	2
119746-42801	11	2 -1A
119746-42810	11	2 -1
119746-42820	11	2 -1B
119746-44500	11	3
119746-44800	11	11
119746-44890	11	12
119746-44900	11	54
119746-44910	11	31
119746-44920	11	32
119746-44950	11	33
119746-44960	11	13
119746-44970	11	14
119746-44980	11	15
119746-61060	13	3
119746-61080	13	6
119746-61100	13	7
119746-61440	13	23
119746-61500	13	32
119746-61550	13	94
119746-61700	13	127
119746-66120	16	1
119761-12020	5	12
119761-12540	5	18
119802-03100	4	41
119802-03110	4	42
119802-03121	4	43
119802-03131	4	44
119802-03141	4	45
119802-13620	6	4
119802-32130	2	17
119802-44500	11	4
119802-44560	11	27
119802-44600	11	6
119802-49010	11	34
119802-49020	11	35
119808-12540	5	9
		15
119810-01200	1	30
119810-02941	1	32
119810-55340	15	23
119810-55650	15	28
119813-59950	14	44
119833-55620	15	21
119840-59570	14	32
119865-21600	8	11

Parts No.	Fig. No.	Ref. No.
119866-12541	5	10
119888-08110	11	51
119888-66111	16	5
119888-66130	16	6
119888-66161	16	3
119888-91026	19	2
119888-91027	19	2 -1
119888-91032	19	11
119888-91110	19	13
119888-91120	19	3
119888-91302	19	4
119888-91321	19	6
119888-91610	19	17
119888-91620	19	18
119940-77270	18	31
119946-91010	19	1
119946-91020	19	2 A
119C10-42320	10	11 -1
119E10-42000	10	1 -1
121023-01551	2	33
121111-21501	8	39
121120-01620	3	5
121250-44901	10	28
121250-55620	15	27
121254-55510	15	24
121256-44600	11	28
121257-55720	15	14
121257-55731	15	15
121400-44640	11	9
121400-91520	19	15
121400-91530	19	16
121450-42450	10	25
121520-34810	9	16
121850-51960	2	22
	20	4
121855-13821	6	12
121855-13830	6	13
122710-51090	12	8
123500-13840	6	14
124060-01050	1	5
124064-55510	15	11
124066-59100	14	41
124085-02220	3	7
124160-01751	2	31
	4	36
124160-01910	1	8
124450-44510	11	21
124450-44520	11	22
124450-44530	11	23
124450-44550	11	26

Parts No.	Fig. No.	Ref. No.
124450-44560	11	24
124465-44950	10	26
	20	18
124550-51350	12	48
124559-77971	19	10
124579-49160	11	39
124732-77720	19	7
124737-91420	19	28
124766-59050	11	42
		43
	14	52
	15	33
		36
124770-91220	19	14
126650-12680	5	11
126650-66020	16	4
128300-77920	19	8
129001-32320	2	13
129001-32330	2	14
129004-12520	5	8
129005-13600	6	10
129005-59830	9	12
129052-61390	13	15
129100-01580	3	1
	8	2
129100-35140	9	2
129100-51560	12	70
129100-51570	12	71
129100-52101	12	94
129107-44590	11	5
129150-11230	4	30
129150-11750	4	32
129150-25301	7	15
129150-49081	11	37
129150-59120	14	15
129150-59131	14	18
129150-91400	19	25
129155-51020	12	4
129155-51140	12	12
129155-51280	12	42
		43
	13	8
129155-51400	12	57
129155-51450	12	60
129155-51521	12	66
129155-51530	12	67
129155-51540	12	68
129155-51550	12	69
129155-51580	12	73
129155-51591	12	74

Parts No.	Fig. No.	Ref. No.
129155-51600	12	22
129155-51701	12	75
129155-52051	12	93
129155-61341	13	79
129155-61450	13	24
129155-61460	13	80
129155-61470	13	132
129155-61480	13	26
129156-61460	13	25
129209-49200	11	41
129209-61370	13	14
129209-61930	13	128
129209-61970	13	129
129210-49320	11	40
129210-59080	15	32
129210-59170	14	51
	15	35
129211-77920	19	9
		30
129240-79300	18	14
129247-07000	11	1
129335-55700	15	6
129350-49530	10	22
129400-92420	20	24
129423-77200	18	2
129423-77710	18	17
129457-44760	10	20
129486-35210	3	4
129486-61540	13	52
129486-61650	13	62
129508-11180	4	18
129550-49090	11	38
129550-49101	11	36
129900-32130	2	12
129901-11450	4	1
	20	6
129901-53800	14	4
129901-59560	14	39
	20	20
129916-49740	10	12
129946-07000	11	55
129946-44900	11	30
129972-77341	18	32
158552-61700	13	63
158552-61710	13	67
158552-61900	13	83
158600-51170	12	14
158600-51270	12	41
158600-51410	12	58
158600-51420	12	59

Parts No. Index

Parts No.	Fig. No.	Ref. No.
158600-51442	12	49
158600-51570	12	72
158600-51790	12	79
170064-67210	16	22
171048-67010	16	7
171048-67130	16	16
171048-67140	16	17
171056-49120	10	27
171081-55910	15	19
171082-91100	19	12
171085-67100	16	13
171085-67110	16	14
171085-67120	16	15
171102-66080	16	8
171340-44740	10	19
174307-51700	13	33
22117-060000	16	23
22137-100000	16	24
22190-060003	13	91
22190-080002	9	13
		15
	20	11
22190-100002	13	92
22190-120002	13	81
	14	50
		54
	15	5
	20	19
22190-160002	3	19
	12	80
	20	23
22217-060000	12	81
22217-100000	16	25
22217-120000	7	18
22242-000120	4	33
22252-000220	8	22
22272-000030	13	69
22272-000050	16	26
22276-000060	11	2 -1C
22351-020006	16	18
22351-050010	12	83
22351-060012	4	22
22372-040000	13	82
22411-200150	16	19
22512-040120	8	5
22857-500100	4	51
		52
22857-500160	4	53
23000-035000	11	44
23000-054000	5	3

Parts No.	Fig. No.	Ref. No.
23000-060000	5	4
23061-070230	11	25
23414-080000	10	14
	20	22
23414-120016	13	131
23418-060000	15	20
23857-030000	9	14
23876-005000	4	14
23876-030000	2	9
23887-100002	13	93
24101-060034	12	84
24101-063034	12	85
24311-000320	2	32
	4	54
	20	12
24311-240100	15	7
		30
24316-000150	12	86
24341-000070	13	70
24341-000240	2	34
	19	27
	20	2
25132-003600	10	18
26013-080162	5	5
26014-060122	11	7
26014-080702	15	1
26022-050122	12	87
26022-060162	12	88
26106-050102	12	13
26106-060102	9	9
	13	71
		84
	16	27
	19	19
26106-060122	2	23
	7	9
26106-060142	13	85
26106-060162	2	24
		35
	5	19
	11	16
		45
26106-060202	4	55
	13	86
26106-060352	7	14
26106-060402	2	25
		26
	6	15
26106-060452	10	21
	13	87

Parts No.	Fig. No.	Ref. No.
26106-060602	2	27
26106-060652	2	28
26106-060752	4	56
26106-080122	3	10
	10	15
	11	46
		46 -1
26106-080162	11	17
		47
		47 -1
	15	2
	16	29
26106-080202	10	24
	11	48
	18	30
26106-080252	6	19
26106-080302	3	11
26106-080354	11	18
26106-080402	4	35
26106-080452	3	12
26106-080502	3	13
	10	16
26106-100182	5	6
26106-100202	11	52
26106-100252	17	1
26106-100302	11	53
26106-100452	18	33
26116-060082	16	20
26206-100252	3	8
26306-080002	2	29
	6	6
		20
		21
26347-040002	6	16
26347-060002	6	17
26366-080002	11	19
		20
		49
	13	72
26557-040352	6	18
26577-060122	10	9
26657-100002	16	28
26716-060002	12	82
26716-120002	7	19
26736-120002	13	88
26756-050002	16	2
26756-060002	13	73
		89
		133
26921-050122	16	21

Parts No.	Fig. No.	Ref. No.
26979-050162	4	34
27241-120000	1	14
27241-250000	10	10
719717-01561	1	1
719717-02901	1	15
719717-02911	1	35
719717-92820	20	1
719744-01500	2	5
719746-51350	12	1
933110-00100	19	20
		34
933110-00301	19	22
		36
977770-1207F	2	30
	3	14
	4	59
	20	25
X0280210331	17	24
X0280335350	17	34
X0280626010	17	13
X0280996180	17	4
X0281007750	17	3
X0282005991	17	7
X0283006960	17	8
X0284105040	17	14
X0284525010	17	28
X0285007030	17	11
X0285105190	17	5
X0285205030	17	6
X0286105010	17	16
X0286305010	17	18
X0286355010	17	19
X0287405140	17	20
X0534007800	17	21
X1289510130	17	35
X4284001590	17	9
X9055715000	17	22
X9490065670	17	33
X9490138090	17	26
X9490138100	17	27
X9490138110	17	25
X9490423420	17	31
X9490560750	17	30
X9490561001	18	3
X9490562360	17	29
X9490721360	17	23
X9491034320	17	17
X9491034330	17	15
X9491040990	17	12
X9491050100	17	10