YANMAR

PARTS CATALOG

0CW10-M49600EN

Last update Jul., 2010

PREFACE

1. This parts catalog is the 1st edition of 3TNV76-GGK2 for KOHLER.

Pub.No. : 0CW10-G49600
Published : January, 2009

2. Model name

Engine model	Vehicle	Vehicle made by
3TNV76-GGK2	MARINE GENERATOR	KOHLER

Directions for the Parts Catalog.

1.The parts stipulated in this Parts Catalog are not necessarily standard equipped parts.
2.Parts may change without prior notice.
3.The following is an example of the Parts Catalog format.

0CF10-E21601 29. FUEL INJECTION PUMP (W/BOOST)

(A)=4JH—DT (D)=4JH—DTZA
(B)=4JH—DTZ (E)=4JH—DTZY
(C)=4JH—DTZP (F)=

① REF.	② LEV.	PARTSNo.	DESCRIPTION	(A)	(B)	(C)	(D)	(E)	(F)	③	④	⑥
1		729595-51390	FUEL INJECTION PUMP	1	1	1	1	1				(1)
1—1	1	729595-51391	FUEL INJECTION PUMP	1	1	1	1	1			N	1
	⑤ (A=E00185)	(B=E00200)										
3	2	26022-060162	SCREW M 6X16	9	9	9	9	9				
I 3—1	2	26022-060162	SCREW M 6X16	4	4	4	4	4			K	
	(A=E00156)	(B=E00156)	(C=E00156) (D=E00156)	(E=E00156)								
4	2	129470-51040	CAMSHFT	9	9	9	9	9				
5	2	122710-51050	BEARING, ROLLER	9	9	9	9	9				
6	2	129470-51060	RETAINER	9	9	9	9	9				

Remarks
(1) BOOST COMPEMSATOR TYPE.
OPTIONAL PART. TO E/#00155
(4JH-DT, 4JH-DTZ)

①Ref. No.

The Ref. No. listed may not be in accordance with the illustration Ref. No.

(Ex.) Illustration No. List Ref No.

1 1 (Before change) → 1-1 (After change)

For interchangeable symbols N, R and K, illustrations for new parts may be abbreviated.

②Lev. (Level)

Level indication

The numbers below indicate the level of relativity towards the main part.

1 ----- Main parts (Assembly parts)
2 ----- Sub component included in " 1 ".
3 ----- Sub component included in " 2 ".

Note) Parts that are not for sale are partially illustrated but not listed.

③Change Mark

The "I" indicates parts that were newly changed.

④Interchangeability Mark

When a part change takes place, one of the following interchangeability symbols is indicated beside the part.

Symbol	Interchangeability	Contents note
N	Old ←Yes / No→ New	New Part is interchangeable for Old Part but Old Part is not interchangeable for New Part.
Q	Old ←No / Yes→ New	New Part is not interchangeable for Old Part but Old Part is interchangeable for New Part.
R	Old ←Yes / Yes→ New	New/ Old Parts are both interchangeable.
S	Old ←No / No→ New	New/ Old Parts are both not interchangeable.
W		Part discontinued.
Z		Part newly added.
F		Not interchangeable by a single part but interchangeable together with related parts.
K		Changes only for used parts quantities.

⑤Effective Machine No.

When a part changes, the effective Machine No. will be indicated in the (A)-(F) column.

Product Symbol	Product No.	Product Symbol	Product No.
C	Clutch No. Compressor No.	F	Machine No. (Agricultural Equip.)
D	Drive No.	M	Machine No.
E	Engine No.	Note 1)	Date

Note 1) A date may follow the symbol. (Ex.) 1996.01
Note 2) " XXX " are for parts that could not be predicted or for engine models that could not be identified.
Note 3) (A=E/#00185) is the E/# (Engine Serial Number) for the column (A) model (in this case 4JH-DT) after the parts design change.

⑥Remarks Mark

Figures or alphabets (symbols) are entered in the remarks column.

The comments (remarks) on parts that are indicated at the bottom of the illustration are the same symbols as those stated above.

Contents

0CW10-M49600

Fig. No.	Fig. Name
3TNV76-GGK2	
1.	CYLINDER BLOCK
2.	GEAR HOUSING
3.	MOUNTING FLANGE & OIL SUMP
4.	CYLINDER HEAD & BONNET
5.	CAMSHAFT & DRIVING GEAR
6.	CRANKSHAFT & PISTON
7.	LUB.OIL SYSTEM
8.	COOLING WATER SYSTEM
9.	FUEL INJECTION PUMP
10.	GOVERNOR
11.	FUEL INJECTION VALVE
12.	FUEL LINE
13.	STARTING MOTOR
14.	GASKET SET

Fig.1. CYLINDER BLOCK

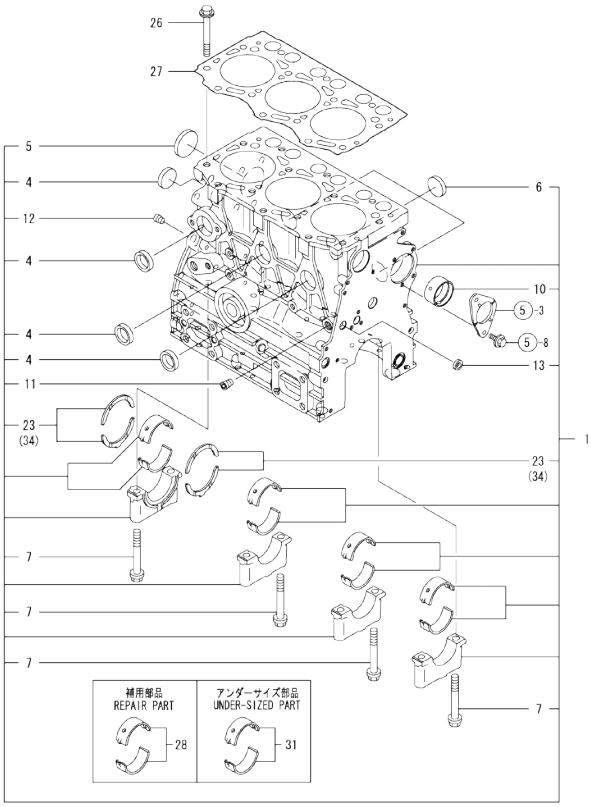

Remarks
(1) REPAIR PART.
(2) UNDER-SIZED(U.S=0.25)PART.
(3) OVER-SIZED(O.S=0.25)PART.

(A)=3TNV76-GGK2 (D)=
(B)= (E)=
(C)= (F)=

No.	Lev.	Parts No.	Description	Q'ty (A)	(B)	(C)	(D)	(E)	(F)	I	R
1	1	719717-01561	BLOCK ASSY, CYLINDER	1							
4	2	105311-01090	PLUG, 30	4							
5	2	119623-01250	PLUG, 45	1							
6	2	119285-01990	PLUG, 25	3							
7	2	119620-02020	BOLT, METAL CAP	8							
10	2	119717-02411	BUSH, CAMSHAFT	1							
11	2	124060-01050	PLUG, PT1/8	1							
12	2	124160-01910	PLUG, PT1/4	1							
13	2	27241-120000	PLUG, 12	1							
23	2	119717-02930	BEARING, THRUST	2							
26	1	119810-01200	BOLT, HEAD	14							
27	1	119717-01330	GASKET, HEAD	1							
28	1	719717-02901	BEARING, MAIN	4							1
31	1	719717-02911	BEARING, 0.25 US	4							2
34	1	119810-02941	BEARING, THRUST 0.25	2							3

N:Old ←Yes/No→ New. Q:Old ←No/Yes→ New. R:Old ←Yes/Yes→ New. S:Old ←No/No→ New. W:Add. Z:Discontinued. F:Interchangeable by set. K:Q'ty Change

Copyright (C) YANMAR GLOBAL CS CO., LTD. All RightsReserved.

Fig.2. GEAR HOUSING

(A)=3TNV76-GGK2
(B)=
(C)=
(D)=
(E)=
(F)=

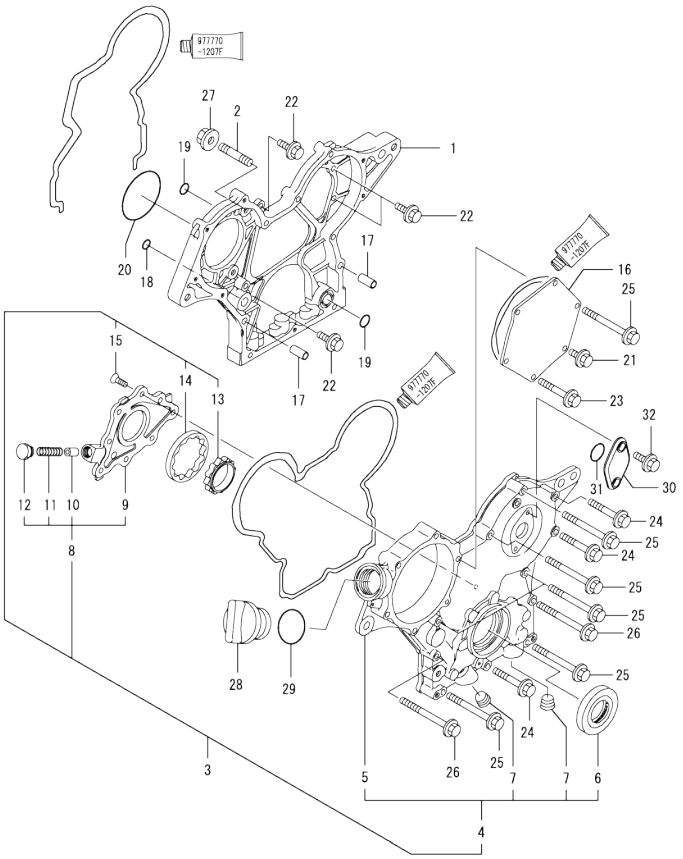

No.	Lev.	Parts No.	Description	Q'ty (A)	(B)	(C)	(D)	(E)	(F)	I	R
1	1	119717-01501	CASE, GEAR	1							
2	1	119717-01570	STUD	3							
3	1	119734-01580	CASE ASSY, GEAR	1							
4	2	719734-01510	CASE ASSY, GEAR	1							
5	3	119744-01521	COVER, GEAR CASE	1							
6	3	119717-01800	SEAL, OIL	1							
7	3	23876-030000	PLUG, R03	2							
8	2	119717-32100	COVER ASSY	1							
9	3	119717-32080	COVER	1							
10	3	129900-32130	VALVE, RELIEF	1							
11	3	129001-32320	SPRING	1							
12	3	129001-32330	PLUG	1							
13	2	119717-32110	ROTOR, INNER	1							
14	2	119717-32120	ROTOR, OUTER	1							
15	2	119802-32130	SCREW, M6X16	8							
16	1	119717-01750	COVER	1							
17	1	119660-01911	PIPE, KNOCK	4							
18	1	119624-32040	O-RING, P12.0	1							
19	1	119717-32050	O-RING, P17.0	3							
20	1	121850-51960	O-RING	1							
21	1	26106-060122	BOLT, M6X 12 PLATED	1							
22	1	26106-060162	BOLT, M6X 16 PLATED	4							
23	1	26106-060402	BOLT, M6X 40 PLATED	4							
24	1	26106-060402	BOLT, M6X 40 PLATED	3							
25	1	26106-060602	BOLT, M6X 60 PLATED	7							
26	1	26106-060652	BOLT, M6X 65 PLATED	2							
27	1	26306-080002	NUT, M8	3							
28	1	124160-01751	COVER, FILLER	1							
29	1	24311-000320	O-RING, 1AP32.0	1							
30	1	121023-01551	COVER	1							
31	1	24341-000240	O-RING, 1AS24.0	1							
32	1	26106-060162	BOLT, M6X 16 PLATED	2							

N:Old ←Yes/No→ New. Q:Old ←No/Yes→ New. R:Old ←Yes/Yes→ New. S:Old ←No/No→ New. W:Add. Z:Discontinued. F:Interchangeable by set. K:Q'ty Change

Copyright (C) YANMAR GLOBAL CS CO., LTD. All RightsReserved.

Fig.3. MOUNTING FLANGE & OIL SUMP

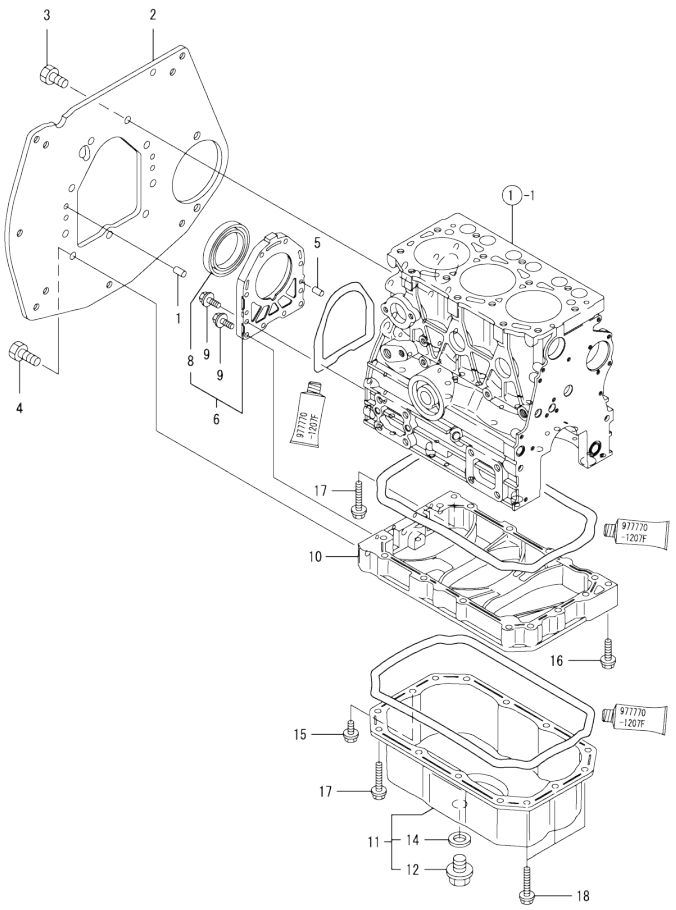

(A)=3TNV76-GGK2
(B)=
(C)=
(D)=
(E)=
(F)=

No.	Lev.	Parts No.	Description	Q'ty (A)	(B)	(C)	(D)	(E)	(F)	I	R
1	1	129100-01580	PIN, M8X16	2							
2	1	119746-01610	FLANGE, MOUNTING	1							
3	1	26206-100202	BOLT, M10X 20 PLATED	7							
4	1	26206-100252	BOLT, M10X 25 PLATED	3							
5	1	119620-01620	PIN, M6X10	2							
6	1	119660-01640	CASE ASSY, OIL SEAL	1							
8	2	124085-02220	SEAL, OIL	1							
9	1	26106-060222	BOLT, M6X 22 PLATED	10							
10	1	119717-01720	SPACER, OIL SUMP	1							
11	1	119717-01770	SUMP ASSY, OIL	1							
12	2	105425-01690	PLUG, 16	1							
14	2	22190-160002	WASHER, SEAL 16	1							
15	1	26106-080122	BOLT, M8X 12 PLATED	1							
16	1	26106-080302	BOLT, M8X 30 PLATED	1							
17	1	26106-080452	BOLT, M8X 45 PLATED	11							
18	1	26106-080502	BOLT, M8X 50 PLATED	3							

N:Old ◄Yes/No► New. Q:Old ◄No/Yes► New. R:Old ◄Yes/Yes► New. S:Old ◄No/No► New. W:Add. Z:Discontinued. F:Interchangeable by set. K:Q'ty Change

Copyright (C) YANMAR GLOBAL CS CO., LTD. All RightsReserved.

Fig.4. CYLINDER HEAD & BONNET

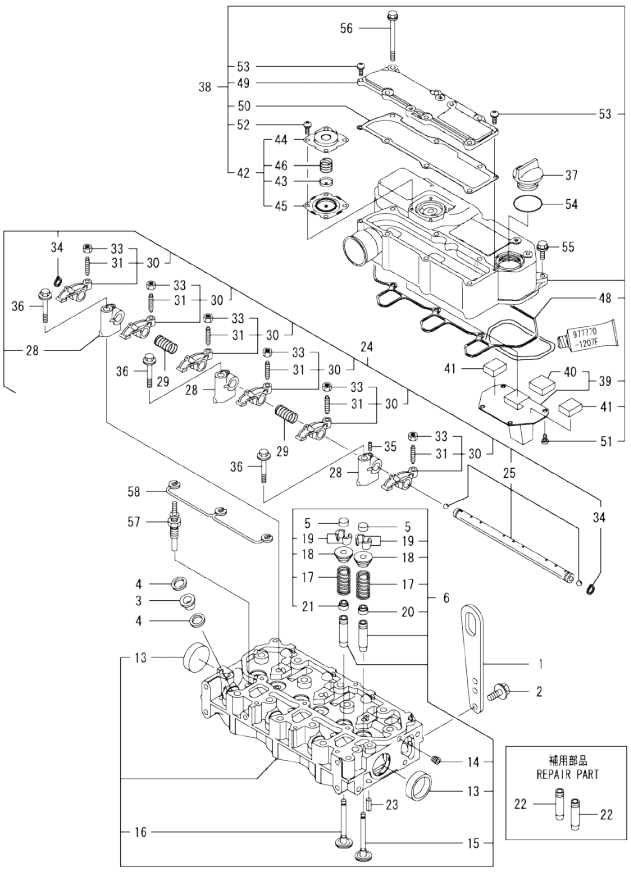

(A)=3TNV76-GGK2
(B)=
(C)=
(D)=
(E)=
(F)=

No.	Lev.	Parts No.	Description	Q'ty (A)	(B)	(C)	(D)	(E)	(F)	I	R
1	1	129900-07900	LIFTER	1							
2	1	26106-080162	BOLT, M8X 16 PLATED	2							
3	1	129901-11450	PROTECTOR, NOZZLE	3							
4	1	119600-11460	GASKET, NOZZLE	6							
5	1	105010-11490	CAP, VALVE	6							
6	1	119717-11740	HEAD ASSY, CYLINDER	1							
13	2	119285-11990	PLUG, 35	2							
14	2	23876-005000	PLUG, R005	1							
15	2	119717-11101	VALVE, INTAKE	3							
16	2	119717-11110	VALVE, EXHAUST	3							
17	2	119717-11131	SPRING, VALVE	6							
18	2	129508-11180	RETAINER, SPRING	6							
19	2	119717-11190	COTTER	12							
20	2	119717-11340	SEAL, VALVE STEM	3							
21	2	119717-11350	SEAL, VALVE STEM	3							
22	1	119717-11800	GUIDE, VALVE	6							1
23	1	22351-060012	PIN, SPRING 6.0X12	2							
24	1	119717-11200	SUPPORT ASSY, ARM	1							
25	2	119717-11240	SHAFT ASSY, ROCKER	1							
28	2	119717-11260	SUPPORT, ROCKER ARM	3							
29	2	119620-11280	SPRING	2							
30	2	119717-11650	ARM, ROCKER	6							
31	3	129150-11230	SCREW, VALVE ADJUST	6							
33	3	129150-11750	NUT, M8	6							
34	2	22242-000120	RING, 12	2							
35	2	26979-050162	SCREW, M5X16	1							
36	1	26106-080402	BOLT, M8X 40 PLATED	3							
37	1	124160-01751	COVER, FILLER	1							
38	1	119717-11381	BONNET ASSY, HEAD	1							
39	2	119717-03031	PLATE	1							
40	3	119717-03070	BAFFLE, BREATHER	1							
41	2	119717-03070	BAFFLE, BREATHER	2							
42	2	119802-03100	DIAPHRAGM ASSY	1							
43	3	119802-03110	PLATE	1							
44	3	119802-03121	COVER, DIAPHRAGM	1							
45	3	119802-03131	DIAPHRAGM	1							
46	3	119802-03141	SPRING, DIAPHRAGM	1							
48	2	119718-11310	GASKET, BONNET	1							
49	2	119717-11320	COVER, BONNET	1							
50	2	119717-11331	GASKET	1							
51	2	22857-500100	SCREW, 5X10	4							
52	2	22857-500100	SCREW, 5X10	4							
53	2	22857-500160	SCREW, 5X16	2							
54	1	24311-000320	O-RING, 1AP32.0	1							
55	1	26106-060202	BOLT, M6X 20 PLATED	3							
56	1	26106-060752	BOLT, M6X 75 PLATED	6							
57	1	119717-77800	PLUG, GLOW	3							
58	1	119717-77820	CONNECTOR, GLOW PLUG	1							

Remarks
(1) REPAIR PART.

N:Old $\xleftarrow[\text{No}]{\text{Yes}}$ New. Q:Old $\xleftarrow[\text{Yes}]{\text{No}}$ New. R:Old $\xleftarrow[\text{Yes}]{\text{Yes}}$ New. S:Old $\xleftarrow[\text{No}]{\text{No}}$ New. W:Add. Z:Discontinued. F:Interchangeable by set. K:Q'ty Change

Copyright (C) YANMAR GLOBAL CS CO., LTD. All RightsReserved.

Fig.5. CAMSHAFT & DRIVING GEAR

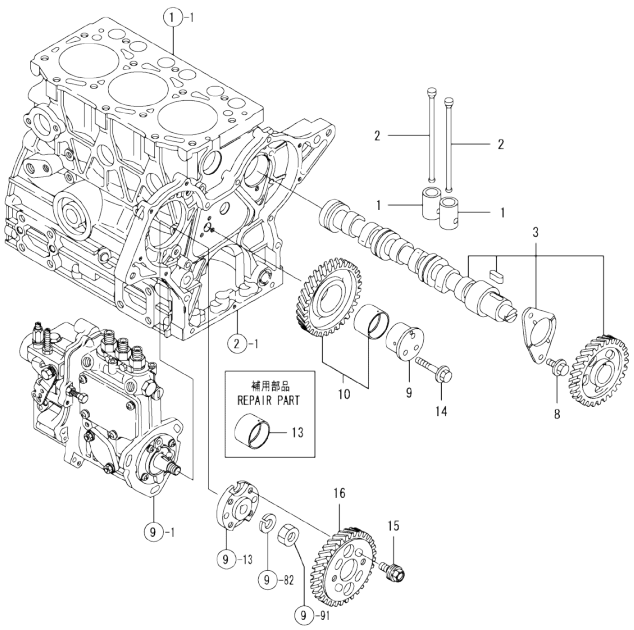

Remarks
(1) REPAIR PART.

(A)=3TNV76-GGK2 (D)=
(B)= (E)=
(C)= (F)=

No.	Lev.	Parts No.	Description	Q'ty (A)	(B)	(C)	(D)	(E)	(F)	I	R
1	1	119620-14200	TAPPET	6							
2	1	119717-14400	ROD, PUSH	6							
3	1	119717-14581	CAMSHAFT ASSY	1							
8	1	26106-060122	BOLT, M6X 12 PLATED	2							
9	1	119717-25050	SHAFT, IDLE	1							
10	1	119717-25101	GEAR ASSY, IDLE	1							
13	1	119717-25911	BUSH, IDLE GEAR	1							1
14	1	26106-060352	BOLT, M6X 35 PLATED	3							
15	1	129150-25301	BOLT	4							
16	1	119717-25930	GEAR, PUMP	1							

N:Old ←Yes/No→ New. Q:Old ←No/Yes→ New. R:Old ←Yes/Yes→ New. S:Old ←No/No→ New. W:Add. Z:Discontinued. F:Interchangeable by set. K:Q'ty Change

Copyright (C) YANMAR GLOBAL CS CO., LTD. All RightsReserved.

Fig.6. CRANKSHAFT & PISTON

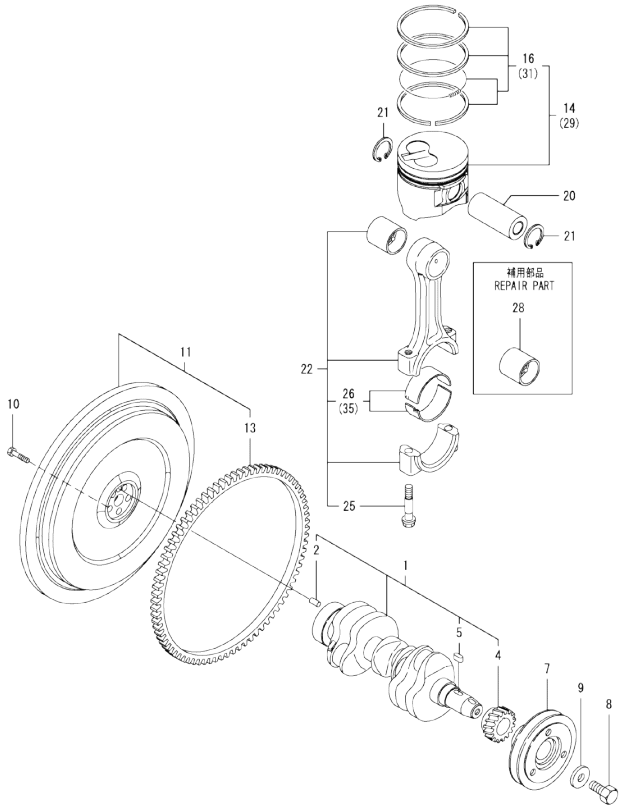

(A)=3TNV76-GGK2
(B)=
(C)=
(D)=
(E)=
(F)=

No.	Lev.	Parts No.	Description	Q'ty (A)	(B)	(C)	(D)	(E)	(F)	I	R
1	1	119717-21700	CRANKSHAFT ASSY	1							
2	2	129100-01580	PIN, M8X16	1							
4	2	119717-21200	GEAR, CRANKSHAFT	1							
5	2	22512-040120	KEY, 4X 12	1							
7	1	119717-21650	V-PULLEY	1							
8	1	119621-21680	BOLT, FLANGE 12X1.25	1							
9	1	119620-21941	WASHER	1							
10	1	119620-21500	BOLT, FLYWHEEL	5							
11	1	119746-21610	FLYWHEEL ASSY	1							
12	2	119746-21450	FLYWHEEL	1							
13	2	124550-21600	GEAR, RING	1							
14	1	119717-22080	PISTON ASSY	3							
16	2	119717-22500	RING SET, PISTON	3							
20	1	119717-22300	PIN, PISTON	3							
21	1	22252-000220	RING, 22	6							
22	1	119717-23000	ROD ASSY, CONNECTING	3							
25	2	119717-23200	BOLT, CONNECTING ROD	6							
26	2	119717-23601	BEARING, CRANK PIN	3							
28	1	119717-23910	BEARING, PISTON PIN	3							1
29	1	119717-22900	PISTON ASSY, 0.25 OS	3							3
31	2	119717-22550	RING SET, 0.25 OS	3							3
35	1	119717-23611	METAL ASSY, 0.25	3							2

Remarks
(1) REPAIR PART.
(2) UNDER-SIZED(U.S=0.25)PART.
(3) OVER-SIZED(O.S=0.25)PART.

N:Old $\frac{\text{Yes}}{\text{No}}$ New. Q:Old $\frac{\text{No}}{\text{Yes}}$ New. R:Old $\frac{\text{Yes}}{\text{Yes}}$ New. S:Old $\frac{\text{No}}{\text{No}}$ New. W:Add. Z:Discontinued. F:Interchangeable by set. K:Q'ty Change

Copyright (C) YANMAR GLOBAL CS CO., LTD. All RightsReserved.

Fig.7. LUB.OIL SYSTEM

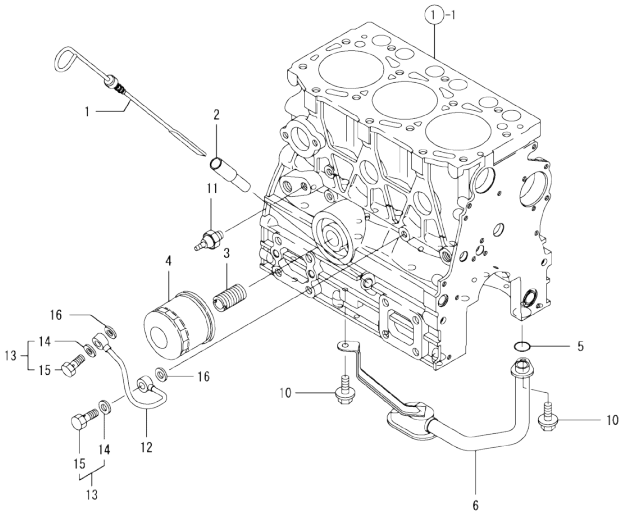

(A)=3TNV76-GGK2
(B)=
(C)=
(D)=
(E)=
(F)=

No.	Lev.	Parts No.	Description	Q'ty (A)	(B)	(C)	(D)	(E)	(F)	I	R
1	1	119717-34801	DIPSTICK, OIL	1							
2	1	121520-34810	GUIDE, DIPSTICK	1							
3	1	129100-35140	STUD	1							
4	1	119305-35170	FILTER ASSY, D68XL65	1							1
5	1	119717-32060	O-RING, P15.0	1							
6	1	119717-35080	PIPE ASSY, OIL INLET	1							
10	1	26106-060102	BOLT, M6X 10 PLATED	2							
11	1	114250-39450	SWITCH, 0.5KG	1							
12	1	119717-39210	PIPE, OIL	1							
13	1	129005-59830	BOLT ASSY, JOINT M8	2							
14	2	22190-080002	WASHER, SEAL 6	2							
15	2	23857-030000	BOLT, JOINT 3	2							
16	1	22190-080002	WASHER, SEAL 6	2							

Remarks
(1) REPAIR PART.

N:Old ←Yes/No→ New. Q:Old ←No/Yes→ New, R:Old ←Yes/Yes→ New. S:Old ←No/No→ New. W:Add. Z:Discontinued. F:Interchangeable by set. K:Q'ty Change

Copyright (C) YANMAR GLOBAL CS CO., LTD. All RightsReserved.

Fig.8. COOLING WATER SYSTEM

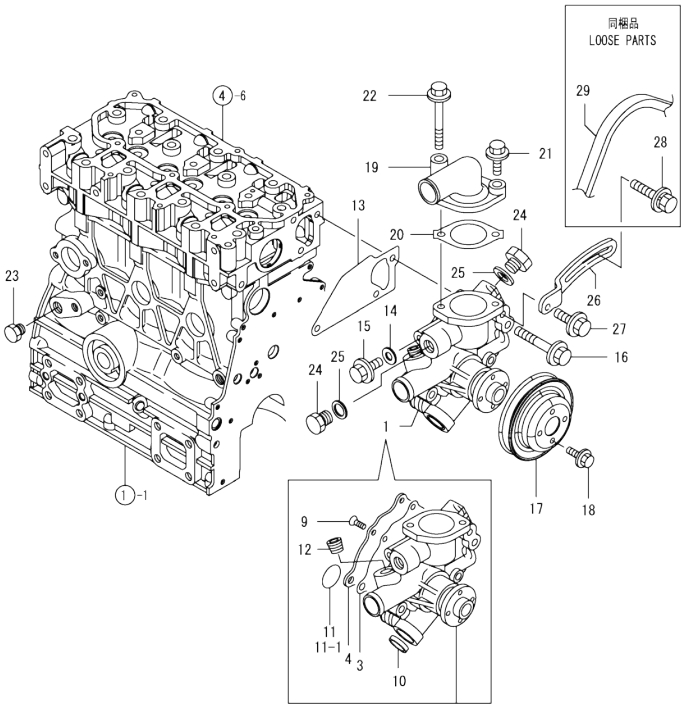

(A)=3TNV76-GGK2 (D)=
(B)= (E)=
(C)= (F)=

No.	Lev.	Parts No.	Description	Q'ty (A)	(B)	(C)	(D)	(E)	(F)	I	R
1	1	119717-42002	PUMP ASSY, WATER	1							
1-1	1	119E10-42000	PUMP ASSY, WATER	1						N	
	(A=*2012.03.)										
3	2	119717-42031	GASKET	1							
4	2	119717-42041	COVER	1							
9	2	26577-060122	SCREW, M6X12	4							
10	2	27241-250000	PLUG, 25	1							
11	2	119717-42320	O-RING, P26	1							
11-1	2	119C10-42320	O-RING, 2028	1						S	
	(A=*2012.03.)										
12	2	129916-49740	PLUG, R3/8	1							
13	1	119717-42020	GASKET, WATER PUMP	1							
14	1	23414-080000	GASKET, 8X1.0	1							
15	1	26106-080122	BOLT, M8X 12 PLATED	1							
16	1	26106-080502	BOLT, M8X 50 PLATED	3							
17	1	119717-42350	V-PULLEY, D=100	1							
18	1	26106-060122	BOLT, M6X 12 PLATED	4							
19	1	124101-49531	COVER, THERMOSTAT	1							
20	1	129795-49551	GASKET	1							
21	1	26106-080252	BOLT, M8X 25 PLATED	1							
22	1	26106-080652	BOLT, M8X 65 PLATED	1							
23	1	171056-49120	PLUG, DRAIN R1/4	1							
24	1	121450-42450	PLUG, M16	2							
25	1	124465-44950	GASKET, 16	2							
26	1	119717-77330	ADJUSTER	1							
27	1	26106-080202	BOLT, M8X 20 PLATED	1							
28	1	119802-77340	BOLT, ADJUST L=40	1							
29	1	25132-003600	V-BELT, A36	1							

N:Old ←Yes/No→ New. Q:Old ←No/Yes→ New. R:Old ←Yes/Yes→ New. S:Old ←No/No→ New. W:Add. Z:Discontinued. F:Interchangeable by set. K:Q'ty Change

Copyright (C) YANMAR GLOBAL CS CO., LTD. All RightsReserved.

Fig.9. FUEL INJECTION PUMP

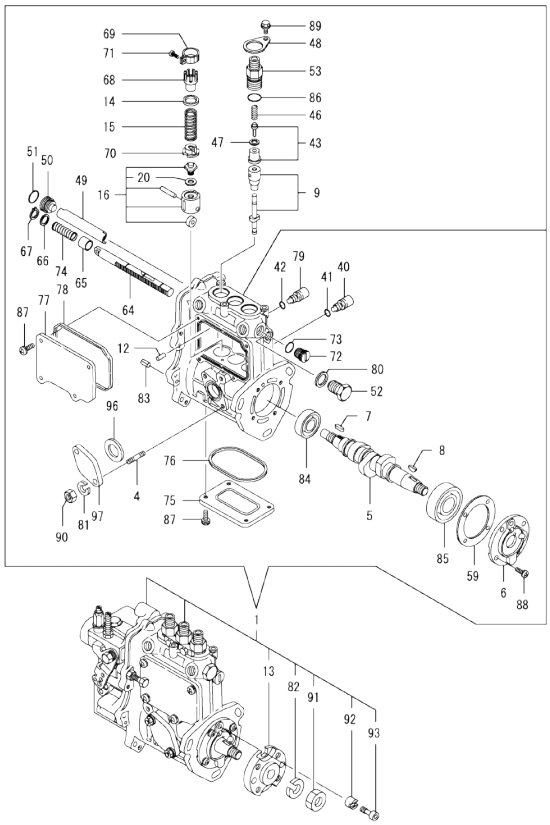

Remarks
(1) GOVERNOR ASSY(FIG.10) IS INCORPORATED IN THIS FUEL INJECTION PUMP(REF.NO.1).

(A)=3TNV76-GGK2 (D)=
(B)= (E)=
(C)= (F)=

No.	Lev.	Parts No.	Description	Q'ty (A)	(B)	(C)	(D)	(E)	(F)	I	R
1	1	719746-51330	PUMP ASSY, INJECTION	1							1
4	2	129155-51020	STUD	2							
5	2	119717-51030	CAMSHAFT	1							
6	2	119717-51060	SUPPORT, CAMSHAFT	1							
7	2	119717-51070	KEY	1							
8	2	122710-51090	KEY	1							
9	2	119717-51100	PLUNGER ASSY	3							
12	2	129155-51140	PIN	3							
13	2	119717-51150	FLANGE	1							
14	2	158600-51170	RETAINER, SPRING	3							
15	2	119717-51190	SPRING, PLUNGER	3							
16	2	119717-51200	TAPPET ASSY	3							
20	3	129155-51600	SHIM SET, ADJUSTING	3							
40	2	158600-51270	STOPPER, TAPPET	3							
41	2	129155-51280	O-RING, S6	3							
42	2	129155-51280	O-RING, S6	1							
43	2	119717-51300	VALVE ASSY, DELIVERY	3							
46	2	119717-51330	SPRING, DELIVERY	3							
47	2	124550-51350	GASKET, DELIVERY	3							
48	2	118400-51370	LOCKING	3							
49	2	129155-51400	DEFLECTOR	1							
50	2	158600-51410	PLUG, DEFLECTOR	1							
51	2	119717-51420	O-RING	1							
52	2	158600-51420	PLUG, DEFLECTOR	1							
53	2	158600-51442	VALVE ASSY, DELIVERY	3							
59	2	129155-51450	SHIM SET, ADJUSTING	1							
64	2	119717-51500	RACK, CONTROL	1							
65	2	129155-51521	BUSH, RACK	1							
66	2	129155-51530	SPACER	1							
67	2	129155-51540	CIRCLIP	1							
68	2	129155-51550	PINION, CONTROL	3							
69	2	129100-51560	PINION	3							
70	2	119717-51570	RETAINER, SPRING	3							
71	2	129100-51570	SCREW	3							
72	2	158600-51570	PLUG	1							
73	2	129155-51580	O-RING	1							
74	2	129155-51591	SPRING, RACK	1							
75	2	129155-51701	COVER	1							
76	2	119717-51711	GASKET	1							
77	2	119717-51750	COVER	1							
78	2	119717-51761	GASKET	1							
79	2	158600-51790	STOOPER, RACK	1							
80	2	22190-160002	WASHER, SEAL 16	1							
81	2	22217-060000	WASHER, SPRING 6	2							
82	2	22217-120000	WASHER, SPRING 12	1							
83	2	22351-050010	PIN, SPRING 5.0X10	2							
84	2	24101-060034	BEARING, BALL 6003	1							
85	2	24101-063034	BEARING, BALL 6303	1							
86	2	24316-000150	O-RING, 4DP15.0	3							
87	2	26022-050122	SCREW, M5X12	8							
88	2	26022-060162	SCREW, M6X16	4							

N:Old ←Yes/No→ New. Q:Old ←No/Yes→ New. R:Old ←Yes/Yes→ New. S:Old ←No/No→ New. W:Add. Z:Discontinued. F:Interchangeable by set. K:Q'ty Change

++ CONTINUE ++

Copyright (C) YANMAR GLOBAL CS CO., LTD. All RightsReserved.

Fig.9. FUEL INJECTION PUMP

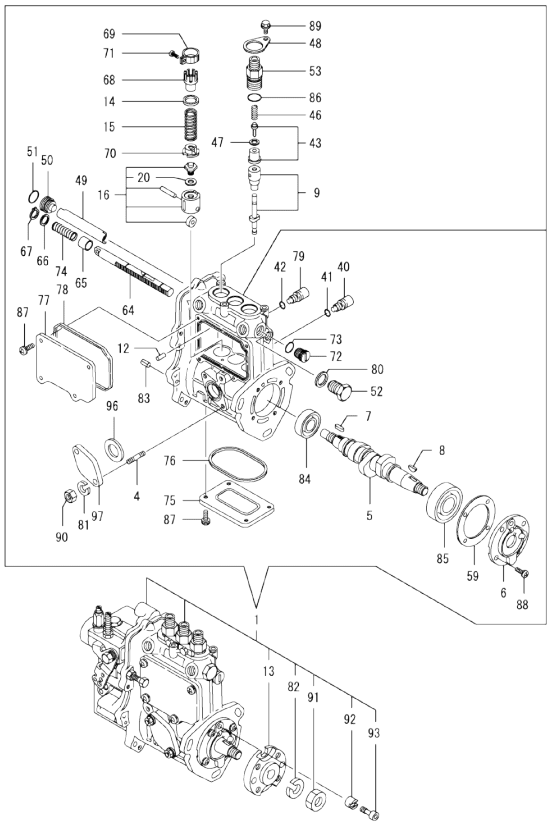

Remarks
(1) GOVERNOR ASSY(FIG.10) IS INCORPORATED IN THIS FUEL INJECTION PUMP(REF.NO.1).

(A)=3TNV76-GGK2 (D)=
(B)= (E)=
(C)= (F)=

No.	Lev.	Parts No.	Description	Q'ty (A)	(B)	(C)	(D)	(E)	(F)	I	R
89	2	26106-050102	BOLT, M5X 10 PLATED	3							
90	2	26716-060002	NUT, M6	2							
91	2	26716-120002	NUT, M12	1							
92	2	119717-51480	COLLAR	1							
93	2	119717-51490	BOLT	1							
96	2	129155-52051	GASKET	1							
97	2	129100-52200	COVER	1							

N:Old ←Yes/No→ New. Q:Old ←No/Yes→ New. R:Old ←Yes/Yes→ New. S:Old ←No/No→ New. W:Add. Z:Discontinued. F:Interchangeable by set. K:Q'ty Change

Copyright (C) YANMAR GLOBAL CS CO., LTD. All RightsReserved.

Fig.10. GOVERNOR

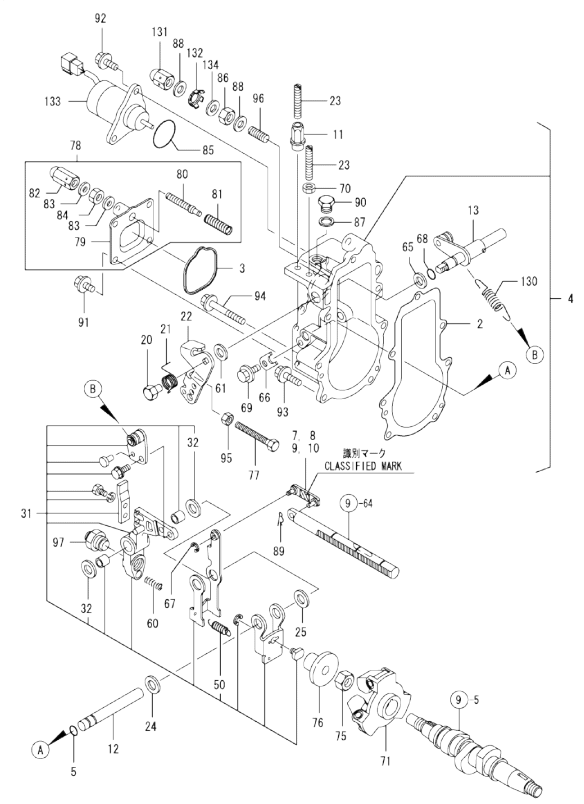

Remarks
* THIS FIGURE(GOVERNOR ASSY)IS INCORPORATED IN THE FUEL INJECTION PUMP ASSY(FIG.9).
(1) SELECTIVE PARTS;CERTAIN THE CLASSIFICATION MARK,THEN PLACE YOUR ORDER(REF.TO.ILLUSTRATION).

(A)=3TNV76-GGK2 (D)=
(B)= (E)=
(C)= (F)=

No.	Lev.	Parts No.	Description	Q'ty (A)	(B)	(C)	(D)	(E)	(F)	I	R
2	2	119717-61050	GASKET	1							
3	2	119717-61070	GASKET	1							
4	2	119546-61100	CASE ASSY, GOVERNOR	1							
5	3	129155-51280	O-RING, S6	1							
7	3	119717-61120	LINK, MARK :3	1							1
8	3	119717-61130	LINK, MARK 98	1							1
9	3	119717-61140	LINK, MARK 88	1							1
10	3	119717-61150	LINK, MARK 03	1							1
11	3	129209-61370	NUT, M6	1							
12	3	129052-61390	SHAFT	1							
13	3	119717-61400	SHAFT ASSY	1							
20	3	129255-61410	NUT, LOCK	1							
21	3	119527-61420	SPRING	1							
22	3	119746-61440	LEVER, CONTROL	1							
23	3	129155-61450	BOLT, LIMITER	2							
24	3	129156-61460	SHIM, T=0.6	1							
25	3	129155-61480	SPACER ASSY	1							
31	3	119746-61500	LEVER ASSY, GOVERNOR	1							
32	4	174307-51700	SHIM SET	2							
50	4	129486-61540	SPRING, SET	1							
60	3	129486-61650	SPRING, STARTING	1							
61	3	158552-61700	SHIM SET	1							
65	3	158552-61710	SHIM, T=1.0	1							
66	3	119660-61901	RETAINER, SHAFT	1							
67	3	22272-000030	RING, E- 3	1							
68	3	24341-000070	O-RING, 1AS7.0	1							
69	3	26106-060102	BOLT, M6X 10 PLATED	1							
70	3	26756-060002	NUT, LOCK M6	1							
71	2	119717-61200	WEIGHT ASSY,GOVERNOR	1							
75	2	129008-61301	NUT	1							
76	2	129155-61341	SLEEVE	1							
77	2	129155-61460	BOLT, IDLE	1							
78	2	119746-61600	COVER ASSY	1							
79	3	119746-61060	COVER, GOVERNOR CASE	1							
80	3	119645-61070	SCREW	1							
81	3	119746-61080	SPRING	1							
82	3	119600-66840	NUT, CAP	1							
83	3	22190-060003	SEAL WASER 6	2							
84	3	26756-060002	NUT, LOCK M6	1							
85	2	158552-61900	O-RING	1							
86	2	129209-61920	NUT, ARB	1							
87	2	22190-100002	WASHER, SEAL 10	1							
88	2	22190-120002	WASHER, SEAL 12	2							
89	2	22372-040000	PIN, SNAP 4	1							
90	2	23887-100002	PLUG, 10	1							
91	2	26106-060102	BOLT, M6X 10 PLATED	4							
92	2	26106-060142	BOLT, M6X 14 PLATED	2							
93	2	26106-060202	BOLT, M6X 20 PLATED	4							
94	2	26106-060452	BOLT, M6X 45 PLATED	3							
95	2	26756-060002	NUT, LOCK M6	1							
96	2	120323-61470	BOLT, CONTROL	1							

N:Old ←Yes/No→ New. Q:Old ←No/Yes→ New. R:Old ←Yes/Yes→ New. S:Old ←No/No→ New. W:Add. Z:Discontinued. F:Interchangeable by set. K:Q'ty Change

++ CONTINUE ++

Copyright (C) YANMAR GLOBAL CS CO., LTD. All RightsReserved.

Fig.10. GOVERNOR

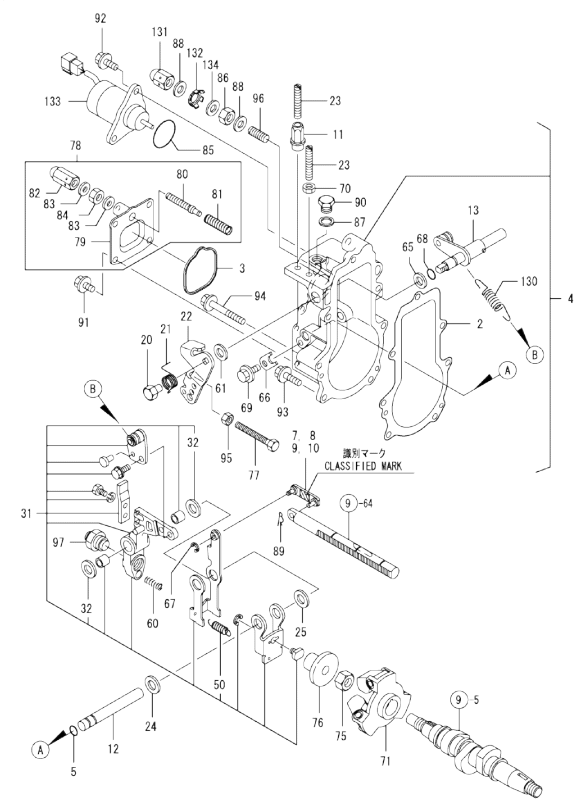

Remarks
* THIS FIGURE(GOVERNOR ASSY)IS INCORPORATED IN THE FUEL INJECTION PUMP ASSY(FIG.9).
(1) SELECTIVE PARTS;CERTAIN THE CLASSIFICATION MARK,THEN PLACE YOUR ORDER(REF.TO.ILLUSTRATION).

(A)=3TNV76-GGK2
(B)=
(C)=
(D)=
(E)=
(F)=

No.	Lev.	Parts No.	Description	Q'ty (A)	(B)	(C)	(D)	(E)	(F)	I	R
97	2	119746-61550	ANGLEICH ASSY	1							
130	2	119746-61700	SPRING, GOVERNOR	1							
131	2	129209-61930	NUT, CAP	1							
132	2	129209-61970	PLATE	1							
133	2	119653-77950	SOLENOID, STOP	1							
134	2	23414-120016	GASKET, 12X1.0	1							

N:Old ←Yes/No→ New. Q:Old ←No/Yes→ New. R:Old ←Yes/Yes→ New. S:Old ←No/No→ New. W:Add. Z:Discontinued. F:Interchangeable by set. K:Q'ty Change

Copyright (C) YANMAR GLOBAL CS CO., LTD. All RightsReserved.

Fig.11. FUEL INJECTION VALVE

(A)=3TNV76-GGK2
(B)=
(C)=
(D)=
(E)=
(F)=

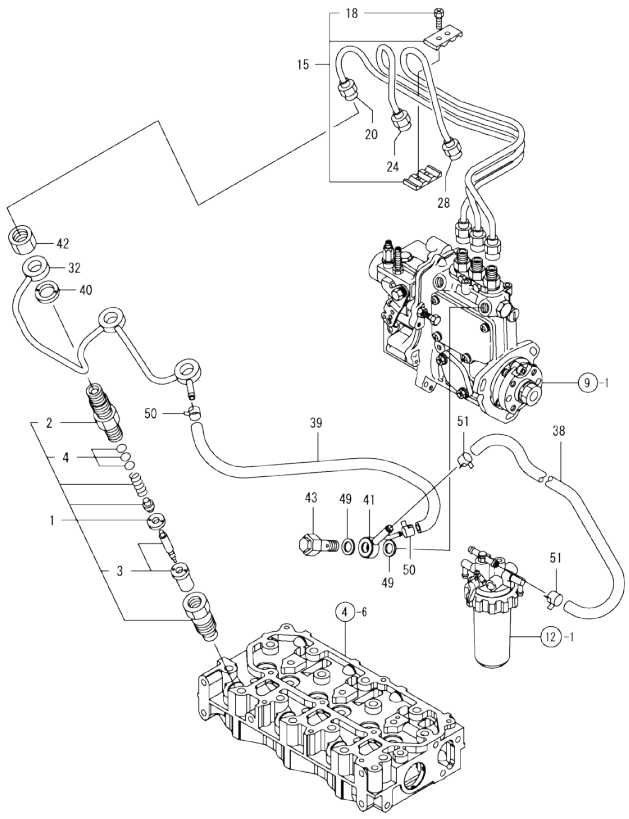

No.	Lev.	Parts No.	Description	Q'ty (A)	(B)	(C)	(D)	(E)	(F)	I	R
1	1	119717-53001	VALVE ASSY,INJECTION	3							
2	2	118200-53010	HOLDER, NOZZLE	3							
3	2	119717-53010	VALVE ASSY,INJECTION	3							
4	2	129901-53800	SHIM SET, ADJUSTING	3							1
15	1	129150-59120	RETAINER, PIPE	1							
18	2	129150-59131	BOLT, M4X14	2							
20	1	119717-59810	PIPE ASSY, INJECTION	1							
24	1	119717-59820	PIPE ASSY, INJECTION	1							
28	1	119717-59830	PIPE ASSY, INJECTION	1							
32	1	119717-59510	PIPE ASSY, RETURN	1							
38	1	119187-59532	PIPE, FUEL	1							
39	1	119746-59550	PIPE, FUEL	1							
40	1	129901-59560	GASKET	3							
41	1	119840-59570	JOINT	1							
42	1	119620-59700	NUT, NOZZLE	3							
43	1	119813-59950	VALVE ASSY, CHECK	1							
49	1	22190-120002	WASHER, SEAL 12	2							
50	1	23000-013000	CLAMP, 13	2							
51	1	23000-016000	CLAMP, 16	2							

Remarks
(1) REPAIR PART.

N:Old ←Yes/No→ New. Q:Old ←No/Yes→ New, R:Old ←Yes/Yes→ New. S:Old ←No/No→ New. W:Add. Z:Discontinued. F:Interchangeable by set. K:Q'ty Change

Copyright (C) YANMAR GLOBAL CS CO., LTD. All RightsReserved.

Fig.12. FUEL LINE

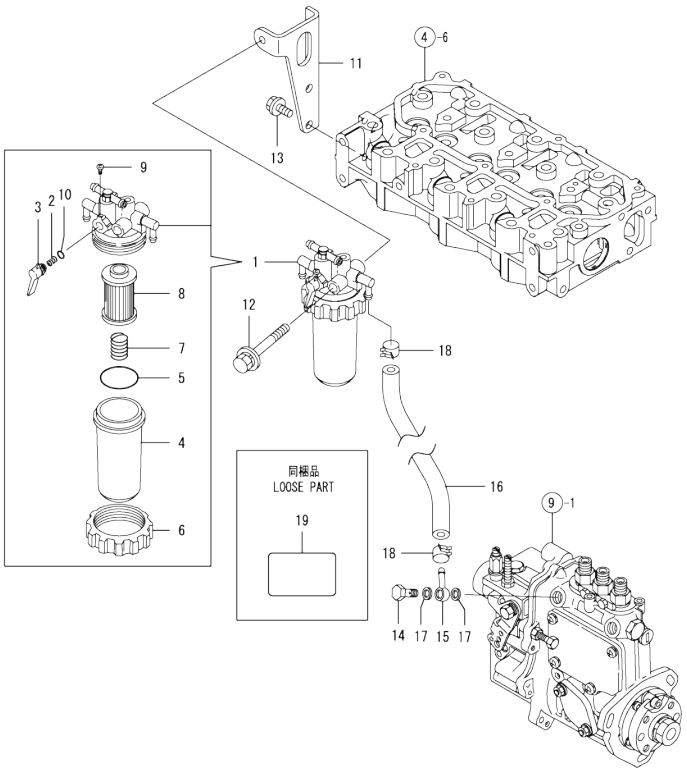

(A)=3TNV76-GGK2
(B)=
(C)=
(D)=
(E)=
(F)=

No.	Lev.	Parts No.	Description	Q'ty (A)	(B)	(C)	(D)	(E)	(F)	I	R
1	1	119833-55620	FILTER ASSY, FUEL	1							
2	2	104200-55330	SPRING, VALVE	1							
3	2	119810-55340	LEVER	1							
4	2	121254-55510	COVER	1							
5	2	102103-55520	O-RING	1							
6	2	110250-55610	RING, RETAINING	1							
7	2	121250-55620	SPRING	1							
8	2	119810-55650	ELEMENT	1							
9	2	104200-55750	SCREW, M4	1							
10	2	24311-240100	O-RING, 1AP10A	1							
11	1	119717-55650	BRACKET, FILTER	1							
12	1	26014-080702	BOLT, M8X 70	1							
13	1	26106-080162	BOLT, M8X 16 PLATED	2							
14	1	103854-39140	BOLT, PIPE JOINT	1							
15	1	101304-59020	JOINT, PIPE 12	1							
16	1	129673-59121	PIPE, FUEL	1							
17	1	22190-120002	WASHER, SEAL 12	2							
18	1	23000-016000	CLAMP, 16	2							
19	1	114110-07760	LABEL, FUEL OIL	1							

N:Old ◄Yes/No► New. Q:Old ◄No/Yes► New. R:Old ◄Yes/Yes► New. S:Old ◄No/No► New. W:Add. Z:Discontinued. F:Interchangeable by set. K:Q'ty Change

Copyright (C) YANMAR GLOBAL CS CO., LTD. All RightsReserved.

Fig.13. STARTING MOTOR

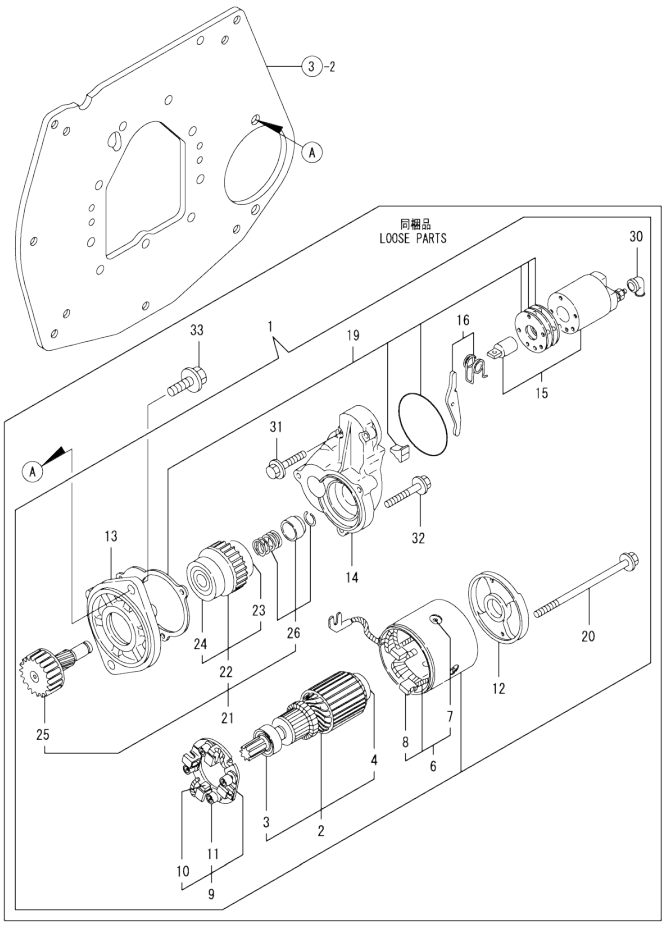

(A)=3TNV76-GGK2 (D)=
(B)= (E)=
(C)= (F)=

No.	Lev.	Parts No.	Description	Q'ty (A)	(B)	(C)	(D)	(E)	(F)	I	R
1	1	171008-77010	STARTER, S114-483	1							
2	2	171008-77400	ARMATURE ASSY	1							
3	3	X2114255110	BEARING, BALL	1							
4	3	X2130350900	BALL BEARING	1							
6	2	171008-77440	COIL ASSY, FIELD	1							
7	3	171008-77450	SCREW	4							
8	3	171008-77460	BRUSH (+)	2							
9	2	171008-77470	HOLDER ASSY, BRUSH	1							
10	3	171008-77480	BRUSH (-)	2							
11	3	171008-77490	SPRING, BRUSH	4							
12	2	171008-77500	COVER, REAR	1							
13	2	171008-77510	HOUSING ASSY, GEAR	1							
14	2	171008-77520	HOUSING, CENTER	1							
15	2	171008-77531	SWITCH ASSY,MAGNETIC	1							
16	2	171008-77540	LEVER SET, SHIFT	1							
19	2	171008-77571	DUST COVER,(NON-ASB.	1							
20	2	171008-77640	BOLT, THROUGH	2							
21	2	171008-77650	PINION ASSY	1							
22	3	X2114555500	CLUTCH ASSY	1							
23	4	X2114955020	BALL BEARING	1							
24	4	X2240410100	BEARING, BALL	1							
25	3	171008-77660	SHAFT, PINION	1							
26	3	171008-77670	STOPPER SET, PINION	1							
30	2	171008-77750	COVER, M TERMINAL	1							
31	2	26106-060322	BOLT, M6X 32 PLATED	2							
32	2	26106-060402	BOLT, M6X 40 PLATED	3							
33	1	26106-100302	BOLT, M10X 30 PLATED	2							

N:Old ←Yes/No→ New. Q:Old ←No/Yes→ New. R:Old ←Yes/Yes→ New. S:Old ←No/No→ New. W:Add. Z:Discontinued. F:Interchangeable by set. K:Q'ty Change

Copyright (C) YANMAR GLOBAL CS CO., LTD. All RightsReserved.

Fig.14. GASKET SET

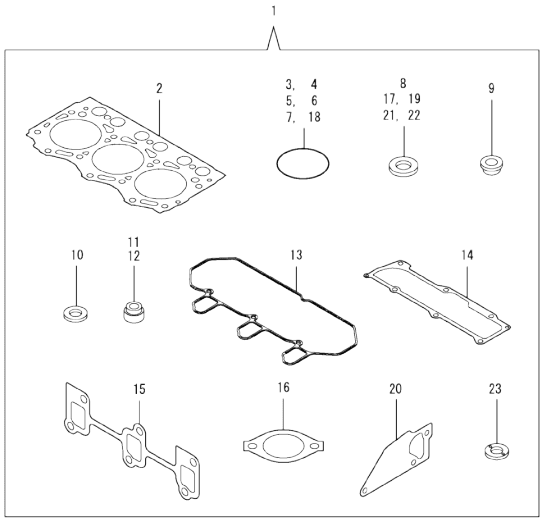

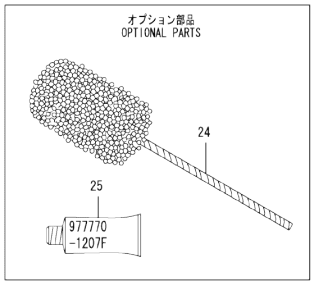

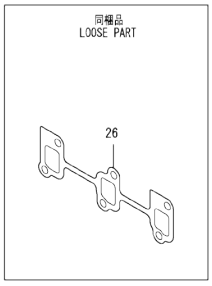

Remarks
(1) OPTIONAL PART.

(A)=3TNV76-GGK2
(B)=
(C)=
(D)=
(E)=
(F)=

No.	Lev.	Parts No.	Description	Q'ty (A)	(B)	(C)	(D)	(E)	(F)	I	R
1	1	719717-92750	GASKET SET	1							1
2	2	119717-01330	GASKET, HEAD	1							
3	2	119624-32040	O-RING, P12.0	1							
4	2	119717-32050	O-RING, P17.0	3							
5	2	121850-51960	O-RING	1							
6	2	24311-000320	O-RING, 1AP32.0	2							
7	2	24341-000240	O-RING, 1AS24.0	1							
8	2	22190-160002	WASHER, SEAL 16	1							
9	2	129901-11450	PROTECTOR, NOZZLE	3							
10	2	119600-11460	GASKET, NOZZLE	6							
11	2	119717-11340	SEAL, VALVE STEM	3							
12	2	119717-11350	SEAL, VALVE STEM	3							
13	2	119718-11310	GASKET, BONNET	1							
14	2	119717-11331	GASKET	1							
15	2	119717-13110	GASKET	1							
16	2	129795-49551	GASKET	1							
17	2	22190-120002	WASHER, SEAL 12	4							
18	2	119717-32060	O-RING, P15.0	1							
19	2	22190-080002	WASHER, SEAL 6	4							
20	2	119717-42020	GASKET, WATER PUMP	1							
21	2	23414-080000	GASKET, 8X1.0	1							
22	2	124465-44950	GASKET, 16	2							
23	2	129901-59560	GASKET	3							
24	1	129400-92420	FLEX HORN	1							1
25	1	977770-1207F	GASKET.LIQUID	1							1
26	1	119717-13110	GASKET	1							

N:Old ←Yes/No→ New. Q:Old ←No/Yes→ New. R:Old ←Yes/Yes→ New. S:Old ←No/No→ New. W:Add. Z:Discontinued. F:Interchangeable by set. K:Q'ty Change

Copyright (C) YANMAR GLOBAL CS CO., LTD. All RightsReserved.

Parts No. Index

Parts No.	Fig. No.	Ref. No.
101304-59020	12	15
102103-55520	12	5
103854-39140	12	14
104200-55330	12	2
104200-55750	12	9
105010-11490	4	5
105311-01090	1	4
105425-01690	3	12
110250-55610	12	6
114110-07760	12	19
114250-39450	7	11
118200-53010	11	2
118400-51370	9	48
119187-59532	11	38
119285-01990	1	6
119285-11990	4	13
119305-35170	7	4
119527-61420	10	21
119546-61100	10	4
119600-11460	4	4
	14	10
119600-66840	10	82
119620-01620	3	5
119620-02020	1	7
119620-11280	4	29
119620-14200	5	1
119620-21500	6	10
119620-21941	6	9
119620-59700	11	42
119621-21680	6	8
119623-01250	1	5
119624-32040	2	18
	14	3
119645-61070	10	80
119653-77950	10	133
119660-01640	3	6
119660-01911	2	17
119660-61901	10	66
119717-01330	1	27
	14	2
119717-01501	2	1
119717-01570	2	2
119717-01720	3	10
119717-01750	2	16
119717-01770	3	11
119717-01800	2	6
119717-02411	1	10
119717-02930	1	23
119717-03031	4	39
119717-03070	4	40

Parts No.	Fig. No.	Ref. No.
119717-03070	4	41
119717-11101	4	15
119717-11110	4	16
119717-11131	4	17
119717-11190	4	19
119717-11200	4	24
119717-11240	4	25
119717-11260	4	28
119717-11320	4	49
119717-11331	4	50
	14	14
119717-11340	4	20
	14	11
119717-11350	4	21
	14	12
119717-11381	4	38
119717-11650	4	30
119717-11740	4	6
119717-11800	4	22
119717-13110	14	15
		26
119717-14400	5	2
119717-14581	5	3
119717-21200	6	4
119717-21650	6	7
119717-21700	6	1
119717-22080	6	14
119717-22300	6	20
119717-22500	6	16
119717-22550	6	31
119717-22900	6	29
119717-23000	6	22
119717-23200	6	25
119717-23601	6	26
119717-23611	6	35
119717-23910	6	28
119717-25050	5	9
119717-25101	5	10
119717-25911	5	13
119717-25930	5	16
119717-32050	2	19
	14	4
119717-32060	7	5
	14	18
119717-32080	2	9
119717-32100	2	8
119717-32110	2	13
119717-32120	2	14
119717-34801	7	1
119717-35080	7	6

Parts No.	Fig. No.	Ref. No.
119717-39210	7	12
119717-42002	8	1
119717-42020	8	13
	14	20
119717-42031	8	3
119717-42041	8	4
119717-42320	8	11
119717-42350	8	17
119717-51030	9	5
119717-51060	9	6
119717-51070	9	7
119717-51100	9	9
119717-51150	9	13
119717-51190	9	15
119717-51200	9	16
119717-51300	9	43
119717-51330	9	46
119717-51420	9	51
119717-51480	9	92
119717-51490	9	93
119717-51500	9	64
119717-51570	9	70
119717-51711	9	76
119717-51750	9	77
119717-51761	9	78
119717-53001	11	1
119717-53010	11	3
119717-55650	12	11
119717-59510	11	32
119717-59810	11	20
119717-59820	11	24
119717-59830	11	28
119717-61050	10	2
119717-61070	10	3
119717-61120	10	7
119717-61130	10	8
119717-61140	10	9
119717-61150	10	10
119717-61200	10	71
119717-61400	10	13
119717-77330	8	26
119717-77800	4	57
119717-77820	4	58
119718-11310	4	48
	14	13
119734-01580	2	3
119744-01521	2	5
119746-01610	3	2
119746-21450	6	12
119746-21610	6	11

Parts No.	Fig. No.	Ref. No.
119746-59550	11	39
119746-61060	10	79
119746-61080	10	81
119746-61440	10	22
119746-61500	10	31
119746-61550	10	97
119746-61600	10	78
119746-61700	10	130
119802-03100	4	42
119802-03110	4	43
119802-03121	4	44
119802-03131	4	45
119802-03141	4	46
119802-32130	2	15
119802-77340	8	28
119810-01200	1	26
119810-02941	1	34
119810-55340	12	3
119810-55650	12	8
119813-59950	11	43
119833-55620	12	1
119840-59570	11	41
119C10-42320	8	11 -1
119E10-42000	8	1 -1
120323-61470	10	96
121023-01551	2	30
121250-55620	12	7
121254-55510	12	4
121450-42450	8	24
121520-34810	7	2
121850-51960	2	20
	14	5
122710-51090	9	8
124060-01050	1	11
124085-02220	3	8
124101-49531	8	19
124160-01751	2	28
	4	37
124160-01910	1	12
124465-44950	8	25
	14	22
124550-21600	6	13
124550-51350	9	47
129001-32320	2	11
129001-32330	2	12
129005-59830	7	13
129008-61301	10	75
129052-61390	10	12
129100-01580	3	1
	6	2

Parts No. Index

Parts No.	Fig. No.	Ref. No.
129100-35140	7	3
129100-51560	9	69
129100-51570	9	71
129100-52200	9	97
129150-11230	4	31
129150-11750	4	33
129150-25301	5	15
129150-59120	11	15
129150-59131	11	18
129155-51020	9	4
129155-51140	9	12
129155-51280	9	41
		42
	10	5
129155-51400	9	49
129155-51450	9	59
129155-51521	9	65
129155-51530	9	66
129155-51540	9	67
129155-51550	9	68
129155-51580	9	73
129155-51591	9	74
129155-51600	9	20
129155-51701	9	75
129155-52051	9	96
129155-61341	10	76
129155-61450	10	23
129155-61460	10	77
129155-61480	10	25
129156-61460	10	24
129209-61370	10	11
129209-61920	10	86
129209-61930	10	131
129209-61970	10	132
129255-61410	10	20
129400-92420	14	24
129486-61540	10	50
129486-61650	10	60
129508-11180	4	18
129673-59121	12	16
129795-49551	8	20
	14	16
129900-07900	4	1
129900-32130	2	10
129901-11450	4	3
	14	9
129901-53800	11	4
129901-59560	11	40
	14	23
129916-49740	8	12

Parts No.	Fig. No.	Ref. No.
158552-61700	10	61
158552-61710	10	65
158552-61900	10	85
158600-51170	9	14
158600-51270	9	40
158600-51410	9	50
158600-51420	9	52
158600-51442	9	53
158600-51570	9	72
158600-51790	9	79
171008-77010	13	1
171008-77400	13	2
171008-77440	13	6
171008-77450	13	7
171008-77460	13	8
171008-77470	13	9
171008-77480	13	10
171008-77490	13	11
171008-77500	13	12
171008-77510	13	13
171008-77520	13	14
171008-77531	13	15
171008-77540	13	16
171008-77571	13	19
171008-77640	13	20
171008-77650	13	21
171008-77660	13	25
171008-77670	13	26
171008-77750	13	30
171056-49120	8	23
174307-51700	10	32
22190-060003	10	83
22190-080002	7	14
		16
	14	19
22190-100002	10	87
22190-120002	10	88
	11	49
	12	17
	14	17
22190-160002	3	14
	9	80
	14	8
22217-060000	9	81
22217-120000	9	82
22242-000120	4	34
22252-000220	6	21
22272-000030	10	67
22351-050010	9	83
22351-060012	4	23

Parts No.	Fig. No.	Ref. No.
22372-040000	10	89
22512-040120	6	5
22857-500100	4	51
		52
22857-500160	4	53
23000-013000	11	50
23000-016000	11	51
	12	18
23414-080000	8	14
	14	21
23414-120016	10	134
23857-030000	7	15
23876-005000	4	14
23876-030000	2	7
23887-100002	10	90
24101-060034	9	84
24101-063034	9	85
24311-000320	2	29
	4	54
	14	6
24311-240100	12	10
24316-000150	9	86
24341-000070	10	68
24341-000240	2	31
	14	7
25132-003600	8	29
26014-080702	12	12
26022-050122	9	87
26022-060162	9	88
26106-050102	9	89
26106-060102	7	10
	10	69
		91
26106-060122	2	21
	5	8
	8	18
26106-060142	10	92
26106-060162	2	22
		32
26106-060202	4	55
	10	93
26106-060222	3	9
26106-060322	13	31
26106-060352	5	14
26106-060402	2	23
		24
	13	32
26106-060452	10	94
26106-060602	2	25
26106-060652	2	26

Parts No.	Fig. No.	Ref. No.
26106-060752	4	56
26106-080122	3	15
	8	15
26106-080162	4	2
	12	13
26106-080202	8	27
26106-080252	8	21
26106-080302	3	16
26106-080402	4	36
26106-080452	3	17
26106-080502	3	18
	8	16
26106-080652	8	22
26106-100302	13	33
26206-100202	3	3
26206-100252	3	4
26306-080002	2	27
26577-060122	8	9
26716-060002	9	90
26716-120002	9	91
26756-060002	10	70
		84
		95
26979-050162	4	35
27241-120000	1	13
27241-250000	8	10
719717-01561	1	1
719717-02901	1	28
719717-02911	1	31
719717-92750	14	1
719734-01510	2	4
719746-51330	9	1
977770-1207F	14	25
X2114255110	13	3
X2114555500	13	22
X2114955020	13	23
X2130350900	13	4
X2240410100	13	24