YANMAR

PARTS CATALOG

0CD50-M02400EN

Last update Jul., 2016

PREFACE

This parts catalog is the 1st edition of 3TNV76-GGQ for Grupel.

Published : June, 2016

Contents

0CD50-M02400

Fig. No.	Fig. Name
ENGINE	
1.	CYLINDER BLOCK
2.	GEAR HOUSING
3.	FLYWHEEL HOUSING & OIL SUMP
4.	CYLINDER HEAD & BONNET
5.	EXHAUST MANIFOLD
6.	CAMSHAFT & DRIVING GEAR
7.	CRANKSHAFT & PISTON
8.	LUB. OIL SYSTEM
9.	COOLING WATER SYSTEM
10.	FUEL INJECTION PUMP
11.	GOVERNOR
12.	FUEL INJECTION VALVE
13.	FUEL PIPE
14.	STARTER MOTOR
15.	GENERATOR
16.	ACCESSORY

Fig.1. CYLINDER BLOCK

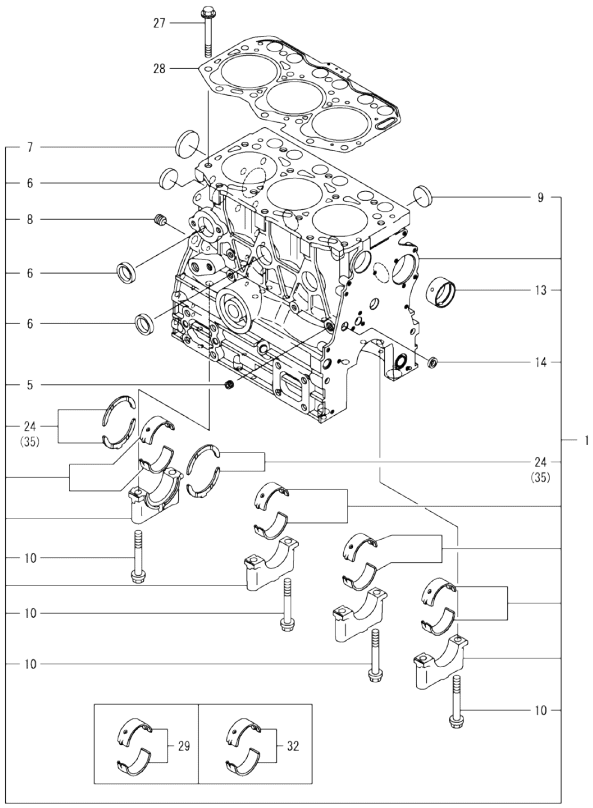

Remarks
(1)Spare parts.
(2)Under-sized(U.S.=0.25) parts.
(3)Over-sized(O.S.=0.25) parts.

(A)=3TNV76-GGQ
(B)=
(C)=
(D)=
(E)=
(F)=

No.	Lev.	Parts No.	Description	Q'ty (A)	(B)	(C)	(D)	(E)	(F)	I	R
1	1	719717-01561	BLOCK ASSY, CYLINDER	1							
5	2	124060-01050	PLUG, PT1/8	1							
6	2	105311-01090	PLUG, CUP TYPE 30	4							
7	2	119623-01250	PLUG, DISH TYPE 45	1							
8	2	124160-01910	PLUG, PT1/4	1							
9	2	119285-01990	PLUG, CUP TYPE 25	3							
10	2	119620-02020	BOLT, METAL CAP	8							
13	2	119717-02411	BUSH, CAMSHAFT	1							
14	2	27241-120000	PLUG, 12	1							
24	2	119717-02930	BEARING ASSY, THRUST	2							
27	1	119810-01200	BOLT, CYLINDER HEAD	14							
28	1	119717-01331	GASKET, HEAD	1							
29	1	719717-02901	BEARING ASSY, MAIN	4							1
32	1	719717-02911	BEARING ASSY, MAIN	4							2
35	1	119810-02941	BEARING, THRUST 0.25	2							3

N:Old ←Yes/No→ New. Q:Old ←No/Yes→ New. R:Old ←Yes/Yes→ New. S:Old ←No/No→ New. W:Add. Z:Discontinued. F:Interchangeable by set. K:Q'ty Change

Copyright (C) 2016 YANMAR CO., LTD. All RightsReserved.

Fig.2. GEAR HOUSING

(A)=3TNV76-GGQ
(B)=
(C)=
(D)=
(E)=
(F)=

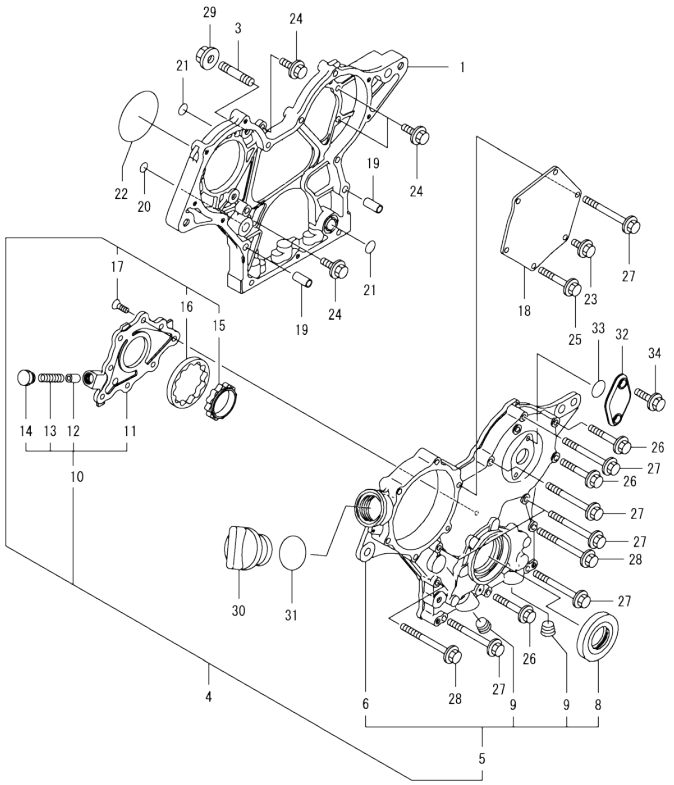

No.	Lev.	Parts No.	Description	Q'ty (A)	(B)	(C)	(D)	(E)	(F)	I	R
1	1	119717-01501	CASE, GEAR	1							
3	1	119717-01570	BOLT, STUD	3							
4	1	119734-01580	CASE ASSY, GEAR	1							
5	2	719734-01510	CASE ASSY, GEAR	1							
6	3	119744-01521	COVER, GEAR CASE	1							
8	3	119717-01800	SEAL, OIL	1							
9	3	23876-030000	PLUG, R03	2							
10	2	119717-32100	COVER ASSY	1							
11	3	119717-32080	COVER, PUMP	1							
12	3	129900-32130	VALVE, RELIEF	1							
13	3	129001-32320	SPRING	1							
14	3	129001-32330	PLUG	1							
15	2	119717-32110	ROTOR, INNER	1							
16	2	119717-32120	ROTOR, OUTER	1							
17	2	119802-32130	SCREW, M6X16	8							
18	1	119717-01750	COVER, PUMP	1							
19	1	119660-01911	PIPE, DOWEL 6X17	4							
20	1	119624-32040	O-RING, P12.0	1							
21	1	119717-32050	O-RING, P17.0	3							
22	1	121850-51960	O-RING	1							
23	1	26106-060122	BOLT, M6X 12 PLATED	1							
24	1	26106-060162	BOLT, M6X 16 PLATED	4							
25	1	26106-060402	BOLT, M6X 40 PLATED	4							
26	1	26106-060402	BOLT, M6X 40 PLATED	3							
27	1	26106-060602	BOLT, M6X 60 PLATED	7							
28	1	26106-060652	BOLT, M6X 65 PLATED	2							
29	1	26306-080002	NUT, M8	3							
30	1	124160-01751	CAP, FILLER	1							
31	1	24311-000320	O-RING, 1AP32.0	1							
32	1	121023-01551	COVER	1							
33	1	24341-000240	O-RING, 1AS24.0	1							
34	1	26106-060162	BOLT, M6X 16 PLATED	2							

N:Old ←Yes/No→ New. Q:Old ←No/Yes→ New. R:Old ←Yes/Yes→ New. S:Old ←No/No→ New. W:Add. Z:Discontinued. F:Interchangeable by set. K:Q'ty Change

Copyright (C) 2016 YANMAR CO., LTD. All RightsReserved.

Fig.3. FLYWHEEL HOUSING & OIL SUMP

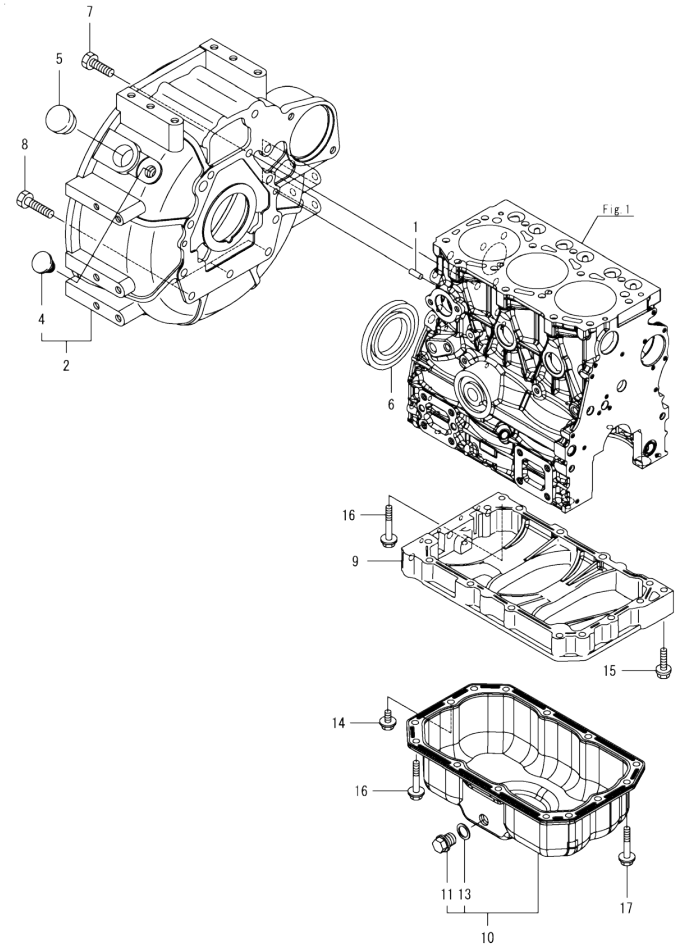

(A)=3TNV76-GGQ (D)=
(B)= (E)=
(C)= (F)=

No.	Lev.	Parts No.	Description	Q'ty (A)	(B)	(C)	(D)	(E)	(F)	I	R
1	1	129100-01580	PIN, PARALLEL 8X16	2							
2	1	119717-01611	HOUSING, FLYWHEEL	1							
4	2	119888-01850	PLUG, RUBBER	1							
5	1	119620-01750	CAP	1							
6	1	124085-02220	SEAL, OIL	1							
7	1	26206-100252	BOLT, M10X 25 PLATED	8							
8	1	26206-100302	BOLT, M10X 30 PLATED	3							
9	1	119717-01720	SPACER, OIL-PAN	1							
10	1	119717-01770	OIL PAN ASSY	1							
11	2	105425-01690	PLUG, M16	1							
13	2	22190-160002	WASHER, SEAL 16	1							
14	1	26106-080122	BOLT, M8X 12 PLATED	1							
15	1	26106-080302	BOLT, M8X 30 PLATED	1							
16	1	26106-080452	BOLT, M8X 45 PLATED	11							
17	1	26106-080502	BOLT, M8X 50 PLATED	3							

N:Old ←Yes/No→ New. Q:Old ←No/Yes→ New. R:Old ←Yes/Yes→ New. S:Old ←No/No→ New. W:Add. Z:Discontinued. F:Interchangeable by set. K:Q'ty Change

Copyright (C) 2016 YANMAR CO., LTD. All RightsReserved.

Fig.4. CYLINDER HEAD & BONNET

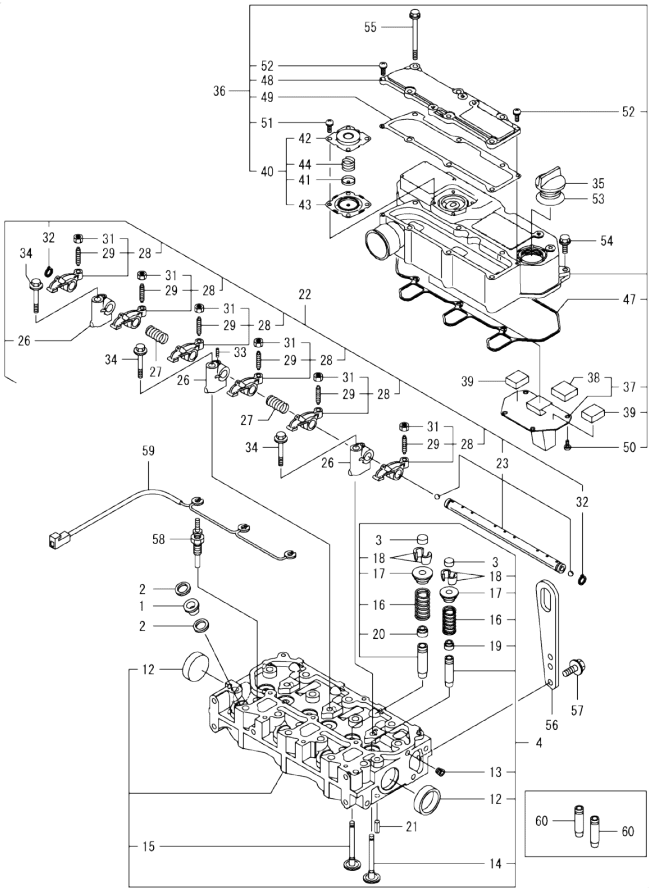

(A)=3TNV76-GGQ
(B)=
(C)=
(D)=
(E)=
(F)=

No.	Lev.	Parts No.	Description	Q'ty (A)	(B)	(C)	(D)	(E)	(F)	I	R
1	1	129901-11450	PROTECTOR, NOZZLE	3							
2	1	119600-11460	GASKET, NOZZLE	6							
3	1	105010-11490	CAP, VALVE	6							
4	1	119717-11740	HEAD ASSY, CYLINDER	1							
12	2	119285-11990	PLUG, CUP TYPE 35	2							
13	2	23876-005000	PLUG, R005	1							
14	2	119717-11101	VALVE, SUCTION	3							
15	2	119717-11110	VALVE, EXHAUST	3							
16	2	119717-11131	SPRING, VALVE	6							
17	2	129508-11180	RETAINER, SPRING	6							
18	2	119717-11190	COTTER, VALVE	12							
19	2	119717-11340	SEAL, VALVE STEM	3							
20	2	119717-11350	SEAL, VALVE STEM	3							
21	1	22351-060012	PIN, SPRING 6.0X12	2							
22	1	119717-11200	SUPPORT ASSY, ROCKER	1							
23	2	119717-11240	SHAFT ASSY, ROCKER	1							
26	2	119717-11260	SUPPORT, ROCKER ARM	3							
27	2	119620-11280	SPRING, ROCKER	2							
28	2	119717-11650	ARM ASSY, ROCKER	6							
29	3	129150-11230	SCREW, VALVE ADJUST	6							
31	3	129150-11750	NUT, M8	6							
32	2	22242-000120	RING, 12	2							
33	2	26979-050162	SCREW, M5X16	1							
34	1	26106-080402	BOLT, M8X 40 PLATED	3							
35	1	124160-01751	CAP, FILLER	1							
36	1	119717-11381	BONNET ASSY, HEAD	1							
37	2	119717-03031	PLATE, BAFFLE	1							
38	3	119717-03070	BAFFLE, BREATHER	1							
39	2	119717-03070	BAFFLE, BREATHER	2							
40	2	119802-03100	DIAPHRAGM ASSY	1							
41	3	119802-03110	PLATE, DIAPHRAGM	1							
42	3	119802-03121	COVER, DIAPHRAGM	1							
43	3	119802-03131	DIAPHRAGM	1							
44	3	119802-03141	SPRING, DIAPHRAGM	1							
47	2	119718-11310	GASKET, BONNET	1							
48	2	119717-11320	COVER, BONNET	1							
49	2	119717-11331	GASKET	1							
50	2	22857-500100	SCREW, 5X10	4							
51	2	22857-500100	SCREW, 5X10	4							
52	2	22857-500160	SCREW, 5X16	2							
53	1	24311-000320	O-RING, 1AP32.0	1							
54	1	26106-060202	BOLT, M6X 20 PLATED	3							
55	1	26106-060752	BOLT, M6X 75 PLATED	6							
56	1	129900-07900	LIFTER, ENGINE	1							
57	1	26106-080162	BOLT, M8X 16 PLATED	2							
58	1	119717-77801	PLUG, GLOW	3							
59	1	119717-77820	CONNECTOR, GLOW PLUG	1							
60	1	119717-11800	GUIDE, VALVE	6							1

Remarks
(1)Spare parts.

N:Old $\xleftarrow[\text{No}]{\text{Yes}}$ New. Q:Old $\xleftarrow[\text{Yes}]{\text{No}}$ New. R:Old $\xleftarrow[\text{Yes}]{\text{Yes}}$ New. S:Old $\xleftarrow[\text{No}]{\text{No}}$ New. W:Add. Z:Discontinued. F:Interchangeable by set. K:Q'ty Change

Copyright (C) 2016 YANMAR CO., LTD. All RightsReserved.

Fig.5. EXHAUST MANIFOLD

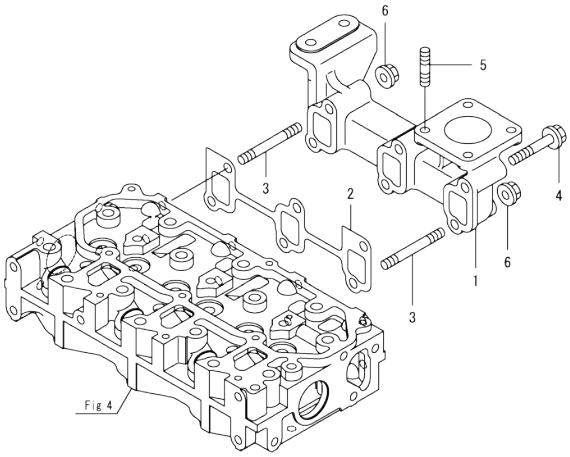

(A)=3TNV76-GGQ
(B)=
(C)=
(D)=
(E)=
(F)=

No.	Lev.	Parts No.	Description	Q'ty (A)	(B)	(C)	(D)	(E)	(F)	I	R
1	1	119717-13109	MANIFOLD, EXHAUST	1							
2	1	119717-13110	GASKET, EXH MANIFOLD	1							
3	1	119717-13600	BOLT, STUD M8X50	2							
4	1	129E00-13610	BOLT, M8X50 10.9	4							
5	1	119131-18320	BOLT, STUD M8X22	4							
6	1	26306-080002	NUT, M8	2							

N:Old ←Yes/No→ New. Q:Old ←No/Yes→ New. R:Old ←Yes/Yes→ New. S:Old ←No/No→ New. W:Add. Z:Discontinued. F:Interchangeable by set. K:Q'ty Change

Copyright (C) 2016 YANMAR CO., LTD. All RightsReserved.

Fig.6. CAMSHAFT & DRIVING GEAR

(A)=3TNV76-GGQ
(B)=
(C)=
(D)=
(E)=
(F)=

No.	Lev.	Parts No.	Description	Q'ty (A)	(B)	(C)	(D)	(E)	(F)	I	R
1	1	119620-14200	TAPPET	6							
2	1	119717-14400	PUSH-ROD	6							
3	1	119717-14581	CAMSHAFT ASSY	1							
9	1	26106-060122	BOLT, M6X 12 PLATED	2							
10	1	119717-25050	SHAFT, IDLE	1							
11	1	119717-25101	GEAR ASSY, IDLE	1							
14	1	26106-060352	BOLT, M6X 35 PLATED	3							
15	1	129150-25301	BOLT	4							
16	1	119717-25930	GEAR, PUMP	1							
17	1	119717-51150	FLANGE	1							
18	1	119717-25911	BUSH, IDLE GEAR	1							1

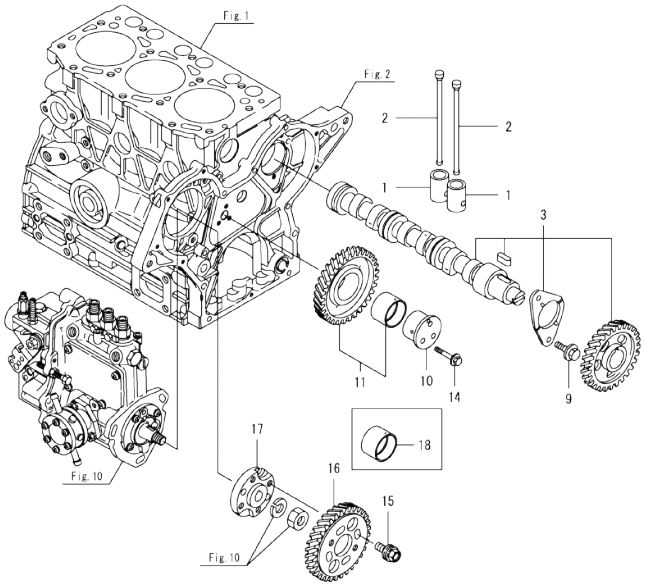

Remarks
(1)Spare parts.

N:Old ←Yes/No→ New. Q:Old ←No/Yes→ New. R:Old ←Yes/Yes→ New. S:Old ←No/No→ New. W:Add. Z:Discontinued. F:Interchangeable by set. K:Q'ty Change

Copyright (C) 2016 YANMAR CO., LTD. All RightsReserved.

Fig.7. CRANKSHAFT & PISTON

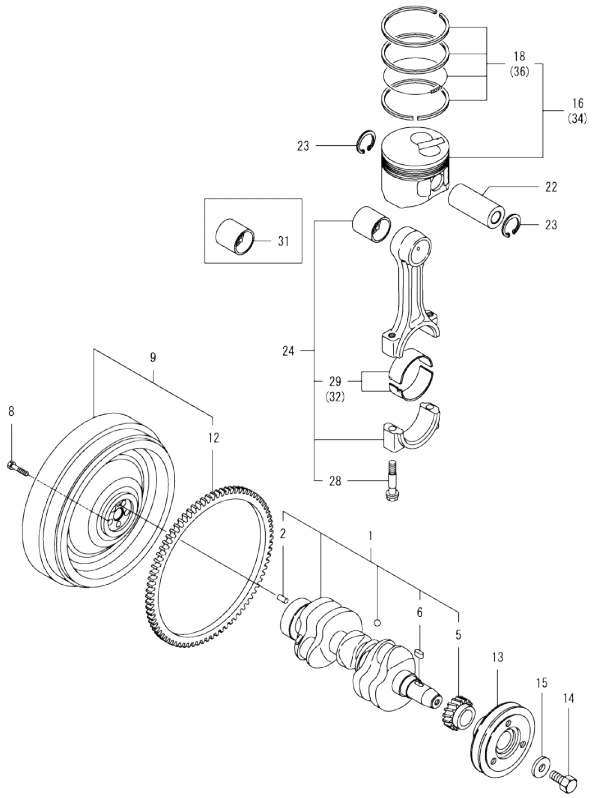

(A)=3TNV76-GGQ
(B)=
(C)=
(D)=
(E)=
(F)=

No.	Lev.	Parts No.	Description	Q'ty (A)	(B)	(C)	(D)	(E)	(F)	I	R
1	1	119717-21700	CRANKSHAFT ASSY	1							
2	2	129100-01580	PIN, PARALLEL 8X16	1							
5	2	119717-21200	GEAR, CRANKSHAFT	1							
6	2	22512-040120	KEY, 4X 12	1							
8	1	121111-21501	BOLT, FLYWHEEL	5							
9	1	119746-21570	FLYWHEEL ASSY	1							
12	2	119865-21600	GEAR, RING Z=116	1							
13	1	119717-21650	V-PULLEY, CRANKSHAFT	1							
14	1	119621-21681	BOLT, FLANGE 12X1.25	1							
15	1	119620-21941	WASHER	1							
16	1	119717-22080	PISTON ASSY	3							
18	2	119717-22500	RING SET, PISTON	3							
22	1	119717-22300	PIN, PISTON	3							
23	1	22252-000220	RING, 22	6							
24	1	119717-23000	ROD ASSY, CONNECTING	3							
28	2	119717-23200	BOLT, CONNECTING ROD	6							
29	2	119717-23601	BEARING, CRANK PIN	3							
31	1	119717-23910	BEARING, PISTON PIN	3							1
32	1	119717-23611	METAL ASSY, 0.25	3							2
34	1	119717-22090	PISTON ASSY, 0.25 OS	3							3
36	2	119717-22550	RING SET, 0.25 OS	3							3

Remarks
(1)Spare parts.
(2)Under-sized(U.S.=0.25) parts.
(3)Over-sized(O.S.=0.25) parts.

N:Old $\frac{\text{Yes}}{\text{No}}$ New. Q:Old $\frac{\text{No}}{\text{Yes}}$ New. R:Old $\frac{\text{Yes}}{\text{Yes}}$ New. S:Old $\frac{\text{No}}{\text{No}}$ New. W:Add. Z:Discontinued. F:Interchangeable by set. K:Q'ty Change

Copyright (C) 2016 YANMAR CO., LTD. All RightsReserved.

Fig.8. LUB. OIL SYSTEM

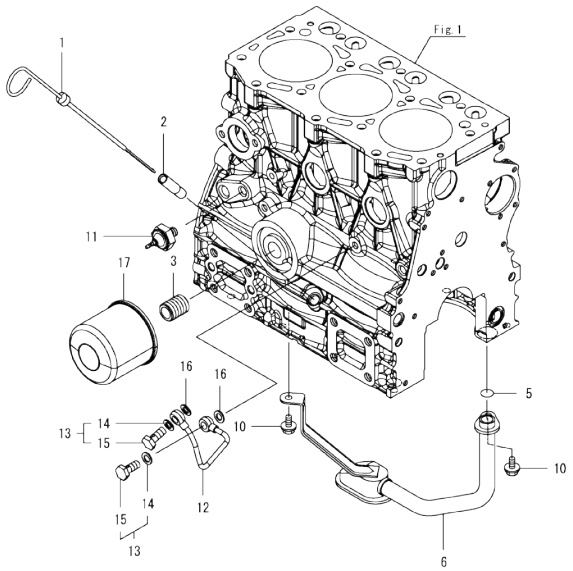

(A)=3TNV76-GGQ
(B)=
(C)=
(D)=
(E)=
(F)=

No.	Lev.	Parts No.	Description	Q'ty (A)	(B)	(C)	(D)	(E)	(F)	I	R
1	1	119717-34801	DIPSTICK	1							
2	1	121520-34810	GUIDE, DIPSTICK	1							
3	1	119717-35140	BOLT, STUD	1							
5	1	119717-32060	O-RING, P15.0	1							
6	1	119717-35080	PIPE ASSY, OIL INLET	1							
10	1	26106-060102	BOLT, M6X 10 PLATED	2							
11	1	114250-39450	SWITCH, HYDRAULIC	1							
12	1	119717-39210	PIPE, OIL	1							
13	1	129005-59830	BOLT ASSY, JOINT M8	2							
14	2	22190-080002	WASHER, SEAL 8	2							
15	2	23857-030000	BOLT, JOINT 3	2							
16	1	22190-080002	WASHER, SEAL 8	2							
17	1	119305-35151	FILTER ASSY, D68XL65	1							1

Remarks
(1)Spare parts.

N:Old $\frac{\text{Yes}}{\text{No}}$ New. Q:Old $\frac{\text{No}}{\text{Yes}}$ New. R:Old $\frac{\text{Yes}}{\text{Yes}}$ New. S:Old $\frac{\text{No}}{\text{No}}$ New. W:Add. Z:Discontinued. F:Interchangeable by set. K:Q'ty Change

Copyright (C) 2016 YANMAR CO., LTD. All RightsReserved.

Fig.9. COOLING WATER SYSTEM

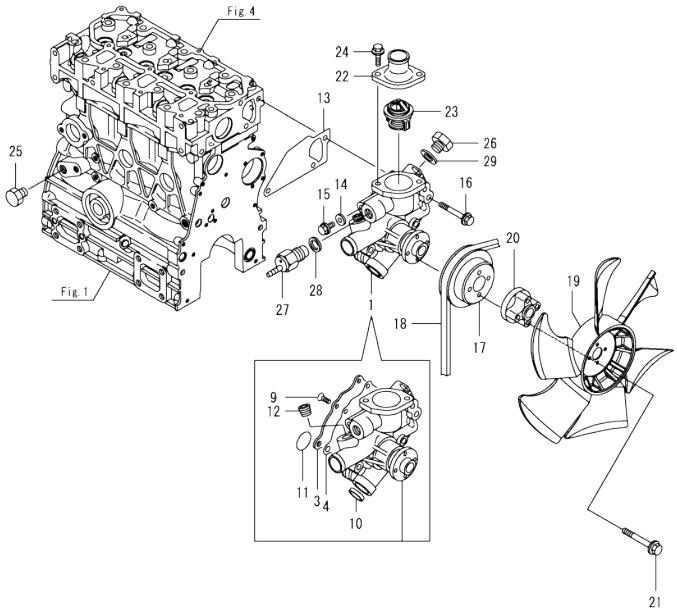

(A)=3TNV76-GGQ
(B)=
(C)=
(D)=
(E)=
(F)=

No.	Lev.	Parts No.	Description	Q'ty (A)	(B)	(C)	(D)	(E)	(F)	I	R
1	1	119E10-42000	PUMP ASSY, WATER	1							
3	2	119717-42041	COVER	1							
4	2	119717-42031	GASKET	1							
9	2	26577-060122	SCREW, M6X12	4							
10	2	27241-250000	PLUG, 25	1							
11	2	119C10-42320	O-RING, 2028	1							
12	2	129916-49740	PLUG, R3/8	1							
13	1	119717-42020	GASKET, WATER PUMP	1							
14	1	23414-080000	GASKET, 8X1.0	1							
15	1	26106-080122	BOLT, M8X 12 PLATED	1							
16	1	26106-080502	BOLT, M8X 50 PLATED	3							
17	1	119717-42350	V-PULLEY, D=100	1							
18	1	25132-003600	V-BELT, A36	1							
19	1	129030-44740	FAN, COOLING D360XUG	1							
20	1	129457-44760	SPACER, FAN	1							
21	1	26106-060452	BOLT, M6X 45 PLATED	4							
22	1	129350-49530	COVER, THERMOSTAT	1							
23	1	119717-49800	THERMOSTAT, 71C	1							
24	1	26106-080202	BOLT, M8X 20 PLATED	2							
25	1	171056-49120	PLUG, DRAIN R1/4	1							
26	1	121450-42450	PLUG, M16	1							
27	1	121250-44901	SWITCH, THERMO 110	1							
28	1	124465-44950	GASKET, 16	1							
29	1	124465-44950	GASKET, 16	1							

N:Old ◄Yes/No► New. Q:Old ◄No/Yes► New. R:Old ◄Yes/Yes► New. S:Old ◄No/No► New. W:Add. Z:Discontinued. F:Interchangeable by set. K:Q'ty Change

Copyright (C) 2016 YANMAR CO., LTD. All RightsReserved.

Fig.10. FUEL INJECTION PUMP

(A)=3TNV76-GGQ
(B)=
(C)=
(D)=
(E)=
(F)=

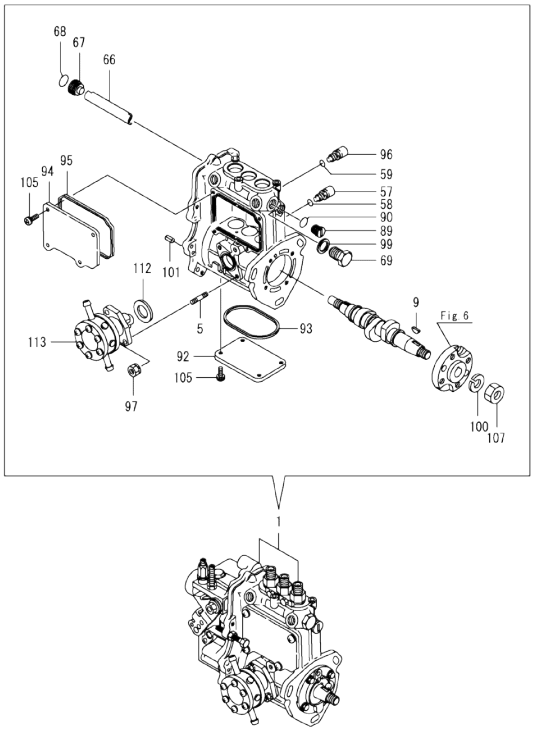

No.	Lev.	Parts No.	Description	Q'ty (A)	(B)	(C)	(D)	(E)	(F)	I	R
1	1	719746-51350	FIE ASSY	1							1
5	2	129155-51020	BOLT, STUD	2							
9	2	122710-51090	FEATHER KEY,WOODRUFF	1							
57	2	158600-51270	STOPPER, TAPPET	3							
58	2	129155-51280	O-RING, S6	3							
59	2	129155-51280	O-RING, S6	1							
66	2	129155-51400	DEFLECTOR	1							
67	2	158600-51410	PLUG, DEFLECTOR	1							
68	2	119717-51420	O-RING	1							
69	2	158600-51420	PLUG, DEFLECTOR	1							
89	2	158600-51570	PLUG, RACK	1							
90	2	129155-51580	O-RING	1							
92	2	129155-51701	COVER	1							
93	2	119717-51711	GASKET	1							
94	2	119717-51750	COVER	1							
95	2	119717-51761	GASKET	1							
96	2	158600-51790	STOPPER, RACK	1							
97	2	119717-51860	NUT, M6	2							
99	2	22190-160002	WASHER, SEAL 16	1							
100	2	22217-120000	WASHER, SPRING 12	1							
101	2	22351-050010	PIN, SPRING 5.0X10	2							
105	2	26022-050122	SCREW, M5X12	8							
107	2	26716-120002	NUT, M12	1							
112	2	129155-52051	GASKET	1							
113	2	129100-52101	PUMP ASSY, FUEL FEED	1							

Remarks
(1)Governor(Fig.11) is incorporated in this Fuel Injection Pump(No.1).

N:Old ◄Yes/No► New, Q:Old ◄No/Yes► New, R:Old ◄Yes/Yes► New, S:Old ◄No/No► New, W:Add, Z:Discontinued, F:Interchangeable by set, K:Q'ty Change

Copyright (C) 2016 YANMAR CO., LTD. All RightsReserved.

Fig.11. GOVERNOR

(A)=3TNV76-GGQ
(B)=
(C)=
(D)=
(E)=
(F)=

No.	Lev.	Parts No.	Description	Q'ty (A)	(B)	(C)	(D)	(E)	(F)	I	R
2	2	119717-51930	PLUG, M10	1							
3	2	119717-61050	GASKET	1							
4	2	119717-61070	GASKET	1							
6	2	129155-51280	O-RING, S6	1							
21	2	119746-61440	LEVER, CONTROL	1							
64	2	119660-61901	STOPPER, SHAFT	1							
68	2	26106-060102	BOLT, M6X 10 PLATED	1							
69	2	26366-080002	NUT, M8	1							
77	2	129155-61460	BOLT, LIMITING	1							
78	2	119746-61600	COVER ASSY	1							
79	3	119746-61060	COVER, GOVERNOR CASE	1							
80	3	119645-61070	SCREW, ADJUSTING	1							
81	3	119746-61080	SPRING	1							
82	3	119600-66840	NUT, CAP	1							
83	3	22190-060003	SEAL WASER 6	2							
84	3	26756-060002	NUT, LOCK M6	1							
85	2	158552-61900	O-RING	1							
87	2	22190-100002	WASHER, SEAL 10	1							
89	2	22372-040000	PIN, SNAP 4	1							
90	2	26106-060102	BOLT, M6X 10 PLATED	4							
91	2	26106-060142	BOLT, M6X 14 PLATED	2							
92	2	26106-060202	BOLT, M6X 20 PLATED	4							
93	2	26106-060452	BOLT, M6X 45 PLATED	3							
94	2	26756-060002	NUT, LOCK M6	1							
121	2	119653-77950	SOLENOID, STOP	1							

Remarks
* This figure(Governor) is incorporated in the Fuel Injection Pump(Fig.10).

N:Old ◄Yes/No► New. Q:Old ◄No/Yes► New. R:Old ◄Yes/Yes► New. S:Old ◄No/No► New. W:Add. Z:Discontinued. F:Interchangeable by set. K:Q'ty Change

Copyright (C) 2016 YANMAR CO., LTD. All RightsReserved.

Fig.12. FUEL INJECTION VALVE

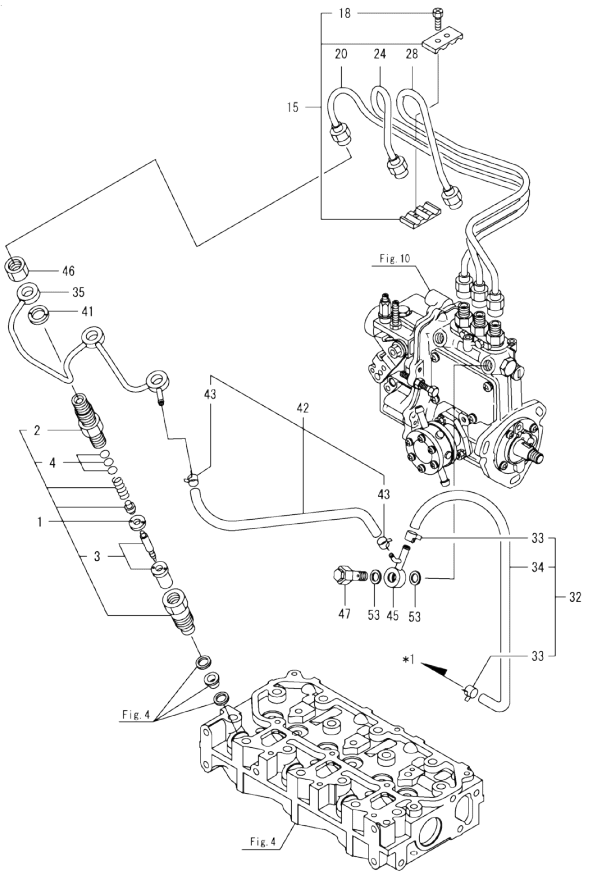

Remarks
*1. To fuel filter.
(1)Spare parts.

(A)=3TNV76-GGQ (D)=
(B)= (E)=
(C)= (F)=

No.	Lev.	Parts No.	Description	Q'ty (A)	(B)	(C)	(D)	(E)	(F)	I	R
1	1	119717-53001	VALVE ASSY,INJECTION	3							
2	2	118200-53010	HOLDER, NOZZLE	3							
3	2	119717-53010	NOZZLE ASSY, F.I.	3							
4	2	129901-53800	SHIM SET, ADJUSTING	3							1
15	1	129150-59120	RETAINER, PIPE	1							
18	2	129150-59131	BOLT, M4X14	2							
20	1	119717-59810	PIPE ASSY, INJECTION	1							
24	1	119717-59820	PIPE ASSY, INJECTION	1							
28	1	119717-59830	PIPE ASSY, INJECTION	1							
32	1	129210-59170	HOSE ASSY, FUEL	1							
33	2	124766-59050	CLAMP, HOSE 11.5	2							
34	2	105225-59511	HOSE, FUEL	1							
35	1	119717-59510	PIPE ASSY, RETURN	1							
41	1	129901-59560	GASKET	3							
42	1	119540-59570	HOSE ASSY, RETURN	1							
43	2	124066-59100	CLAMP, HOSE 8	2							
45	1	119840-59570	JOINT	1							
46	1	119620-59700	NUT, NOZZLE	3							
47	1	119813-59950	VALVE ASSY, CHECK	1							
53	1	22190-120002	WASHER, SEAL 12	2							

N:Old ←Yes/No→ New. Q:Old ←No/Yes→ New. R:Old ←Yes/Yes→ New. S:Old ←No/No→ New. W:Add. Z:Discontinued. F:Interchangeable by set. K:Q'ty Change

Copyright (C) 2016 YANMAR CO., LTD. All RightsReserved.

Fig.13. FUEL PIPE

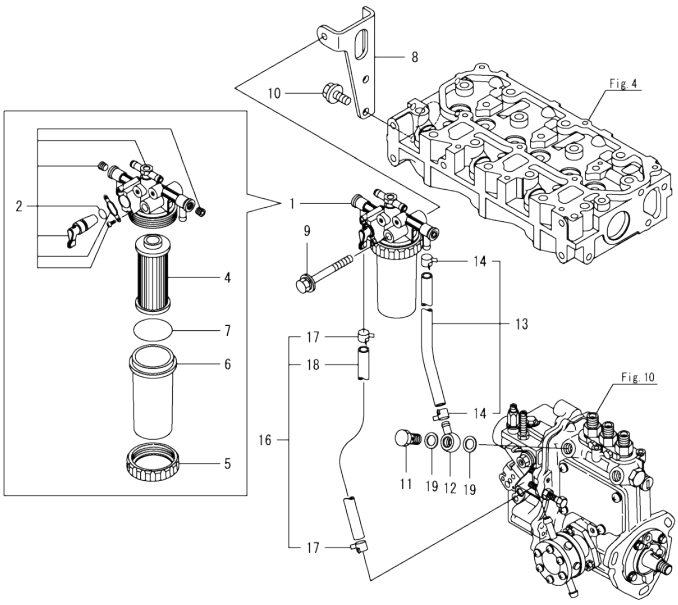

(A)=3TNV76-GGQ
(B)=
(C)=
(D)=
(E)=
(F)=

No.	Lev.	Parts No.	Description	Q'ty (A)	(B)	(C)	(D)	(E)	(F)	I	R
1	1	119833-55630	FILTER ASSY, FUEL	1							
2	2	119833-55640	BODY ASSY,FILTER	1							
4	2	119833-55650	ELEMENT, FUEL	1							
5	2	119833-55660	RING, RETAINING	1							
6	2	119833-55670	BOWL, STRAINER	1							
7	2	24311-000440	O-RING, 1AP44.0	1							
8	1	119717-55650	BRACKET, FILTER	1							
9	1	26014-080702	BOLT, M8X 70	1							
10	1	26106-080162	BOLT, M8X 16 PLATED	2							
11	1	103854-39140	BOLT, PIPE JOINT	1							
12	1	101304-59020	JOINT, PIPE 12	1							
13	1	129210-59080	HOSE ASSY, FUEL	1							
14	2	124766-59050	CLAMP, HOSE 11.5	2							
16	1	129210-59170	HOSE ASSY, FUEL	1							
17	2	124766-59050	CLAMP, HOSE 11.5	2							
18	2	105225-59511	HOSE, FUEL	1							
19	1	22190-120002	WASHER, SEAL 12	2							

N:Old ◄Yes/No► New. Q:Old ◄No/Yes► New. R:Old ◄Yes/Yes► New. S:Old ◄No/No► New. W:Add. Z:Discontinued. F:Interchangeable by set. K:Q'ty Change

Copyright (C) 2016 YANMAR CO., LTD. All RightsReserved.

Fig.14. STARTER MOTOR

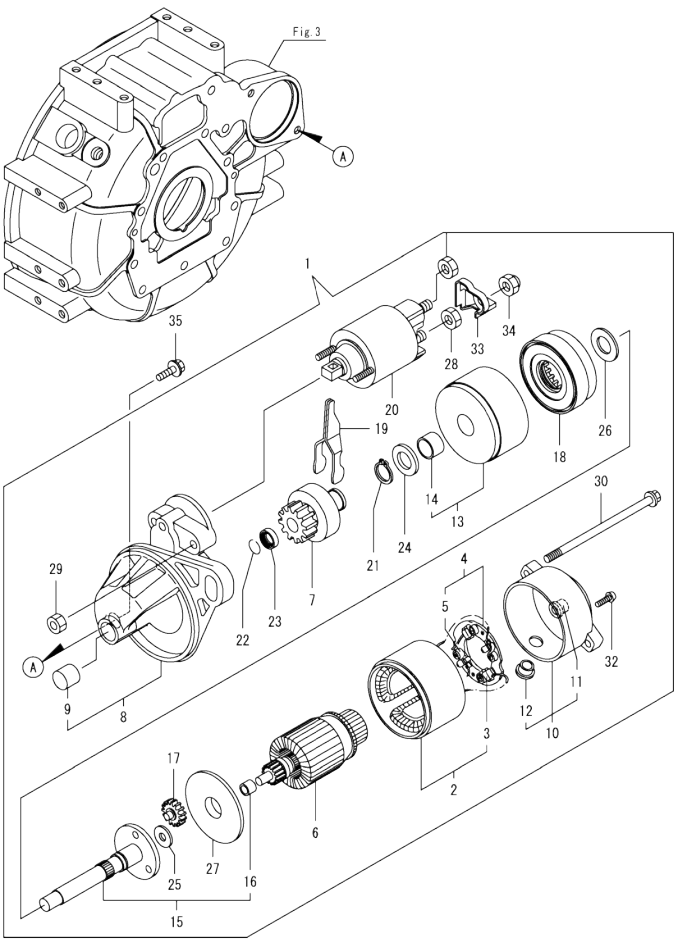

(A)=3TNV76-GGQ (D)=
(B)= (E)=
(C)= (F)=

No.	Lev.	Parts No.	Description	Q'ty (A)	(B)	(C)	(D)	(E)	(F)	I	R
1	1	119717-77010	STARTER ASSY	1							
2	2	X0281007750	YOKE ASSY	1							
3	3	X0280996180	STARTER KIT	2							
4	2	X0285105190	HOLDER ASSY	1							
5	3	X0285205030	SPRING	4							
6	2	X0282005991	ARMATURE ASSY	1							
7	2	X0283006960	CLUTCH ASSY	1							
8	2	X4284001590	HOUSING ASSY	1							
9	3	X9491050100	BEARING, NEEDLE	1							
10	2	X0285007030	FRAME ASSY	1							
11	3	X9491040990	BEARING	1							
12	3	X0280626010	COVER	1							
13	2	X0284105040	BEARING ASSY	1							
14	3	X9491034330	BEARING	1							
15	2	X0286105010	SHAFT ASSY	1							
16	3	X9491034320	BEARING	1							
17	2	X0286305010	GEAR	3							
18	2	X0286355010	GEAR	1							
19	2	X0287405140	LEVER	1							
20	2	X2534000090	SWITCH ASSY	1							
21	2	X9055715000	RING	1							
22	2	X9490721360	RING	1							
23	2	X0280210331	NUT	1							
24	2	X9490138110	WASHER	1							
25	2	X9490138090	WASHER	1							
26	2	X9490138100	WASHER	1							
27	2	X0284525010	PLATE	1							
28	2	X9490562360	NUT	1							
29	2	X9490560750	NUT	2							
30	2	X9490423420	BOLT, THROUGH	2							
32	2	X9490065670	SCREW, M4X6	2							
33	2	X1280330020	COVER, TERMINAL	1							
34	2	X1289510130	NUT	1							
35	1	26106-100252	BOLT, M10X 25 PLATED	2							

N:Old ←Yes/No→ New. Q:Old ←No/Yes→ New. R:Old ←Yes/Yes→ New. S:Old ←No/No→ New. W:Add. Z:Discontinued. F:Interchangeable by set. K:Q'ty Change

Copyright (C) 2016 YANMAR CO., LTD. All RightsReserved.

Fig.15. GENERATOR

(A)=3TNV76-GGQ
(B)=
(C)=
(D)=
(E)=
(F)=

No.	Lev.	Parts No.	Description	Q'ty (A)	(B)	(C)	(D)	(E)	(F)	I	R
1	1	129423-77200	GENERATOR ASSY, 40A	1							
2	2	X9490561001	NUT	1							
3	2	119620-77380	ROTOR ASSY	1							
4	3	123501-79240	BEARING, BALL	1							
5	3	119620-79250	COVER, BEARING	1							
6	2	119620-77421	FRAME ASSY,GENERATOR	1							
7	3	119620-79200	BEARING, BALL	1							
8	3	119620-79210	RETAINER	1							
9	3	119620-79220	SCREW	4							
10	3	119620-79230	BOLT, STUD	2							
11	2	119620-77440	FRAME ASSY	1							
12	2	129240-79300	COVER	1							
13	2	119620-77461	PULLEY, GENERATOR	1							
14	2	119620-77471	NUT	1							
15	2	119620-77490	COLLAR	1							
16	2	129423-77710	REGULATOR ASSY	1							
17	2	119620-79260	HOLDER	1							
18	2	129052-79270	HOLDER, BRUSH	1							
19	3	119620-77480	BRUSH	2							
20	3	119620-79280	SPRING	2							
21	2	119620-79290	SCREW	6							
22	2	119620-79300	SCREW	1							
23	2	119620-79310	BOLT	3							
24	2	119620-79320	SCREW	2							
25	2	119620-79330	BOLT	2							
26	2	119620-79340	BUSH, INSULATION	1							
27	2	119620-79350	NUT	2							
28	2	119620-79360	WASHER, THRUST	1							
29	1	26106-100452	BOLT, M10X 45 PLATED	1							
30	1	119940-77270	SPACER	1							
31	1	119717-77340	ADJUSTER, BELT	1							
32	1	129972-77341	BOLT, ADJUST L=50	1							
33	1	26106-080202	BOLT, M8X 20 PLATED	1							

N:Old ←Yes/No→ New. Q:Old ←No/Yes→ New. R:Old ←Yes/Yes→ New. S:Old ←No/No→ New. W:Add. Z:Discontinued. F:Interchangeable by set. K:Q'ty Change

Copyright (C) 2016 YANMAR CO., LTD. All RightsReserved.

Fig.16. ACCESSORY

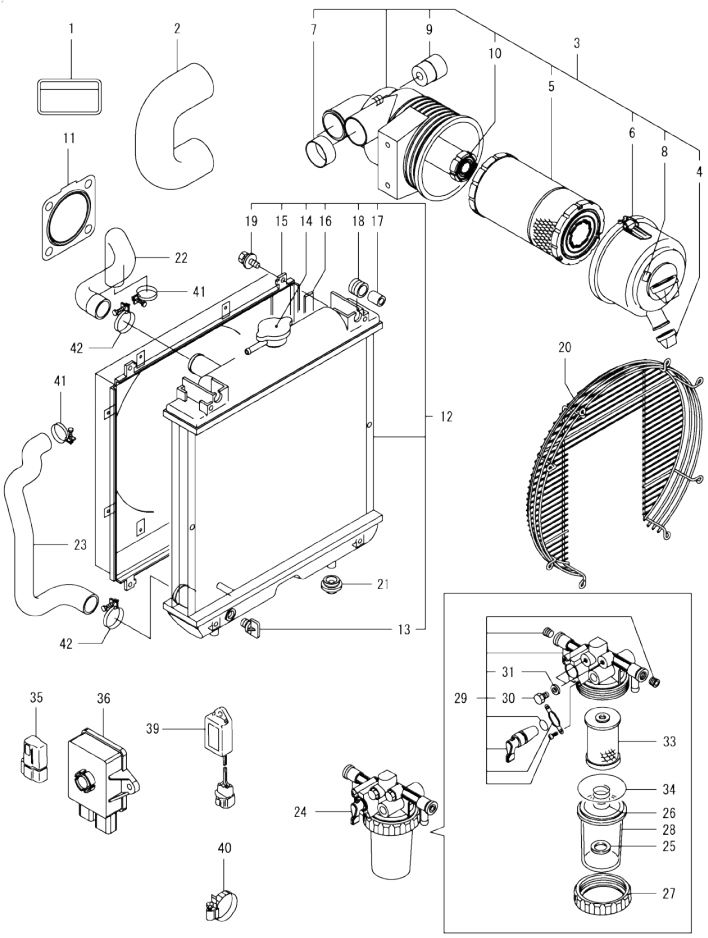

(A)=3TNV76-GGQ
(B)=
(C)=
(D)=
(E)=
(F)=

No.	Lev.	Parts No.	Description	Q'ty (A)	(B)	(C)	(D)	(E)	(F)	I	R
1	1	114110-07761	LABEL, FUEL OIL CAUT	1							
2	1	119761-12020	HOSE, AIR INTAKE	1							
3	1	119515-12530	AIR CLEANER ASSY	1							
4	2	119808-12540	VALVE, UNLOAD	1							
5	2	119655-12560	ELEMENT	1							
6	2	119336-12570	COVER ASSY	1							
7	2	105027-12580	RING, VALVE	1							
8	2	129612-12650	LABEL, MARKING	1							
9	2	126650-12680	INDICATOR	1							
10	2	119233-12700	ELEMENT, INNER	1							
11	1	119515-13200	GASKET, SILENCER	1							
12	1	129044-44500	RADIATOR ASSY	1							
13	2	129508-44550	COCK ASSY	1							
14	2	129107-44590	CAP, RADIATOR	1							
15	2	129044-44600	SHROUD	1							
16	2	129601-44610	GASKET	2							
17	2	118400-44670	COLLAR	2							
18	2	118400-44720	MOUNT, RUBBER	2							
19	2	26014-060122	BOLT, M6X 12	4							
20	1	129601-44560	GUARD, FAN	1							
21	1	119255-44660	ABSORBER	4							
22	1	129602-49010	HOSE, WATER	1							
23	1	129612-49040	HOSE, WATER	1							
24	1	129335-55750	SEPARATOR ASSY,WATER	1							
25	2	129053-55640	FLOAT	1							
26	2	129053-55650	SPRING, SCREEN	1							
27	2	119833-55660	RING, RETAINING	1							
28	2	129335-55740	CUP	1							
29	2	129335-55770	BODY ASSY	1							
30	3	129242-55750	VALVE, AIR VENT	1							
31	3	129242-55760	GASKET, PLUG	1							
33	2	129335-55780	ELEMENT ASSY	1							
34	2	24311-000440	O-RING, 1AP44.0	1							
35	1	119643-66900	DIODE	1							
36	1	119650-77911	RELAY ASSY, GLOW	1							
39	1	129211-77920	TIMER	1							
40	1	23000-054000	CLAMP, 54	2							
41	1	23010-038000	CLAMP, 38	2							
42	1	23010-044000	CLAMP, 44	2							

N:Old ◄Yes/No► New. Q:Old ◄No/Yes► New. R:Old ◄Yes/Yes► New. S:Old ◄No/No► New. W:Add. Z:Discontinued. F:Interchangeable by set. K:Q'ty Change

Copyright (C) 2016 YANMAR CO., LTD. All RightsReserved.

Parts No. Index

Parts No.	Fig. No.	Ref. No.
101304-59020	13	12
103854-39140	13	11
105010-11490	4	3
105027-12580	16	7
105225-59511	12	34
	13	18
105311-01090	1	6
105425-01690	3	11
114110-07761	16	1
114250-39450	8	11
118200-53010	12	2
118400-44670	16	17
118400-44720	16	18
119131-18320	5	5
119233-12700	16	10
119255-44660	16	21
119285-01990	1	9
119285-11990	4	12
119305-35151	8	17
119336-12570	16	6
119515-12530	16	3
119515-13200	16	11
119540-59570	12	42
119600-11460	4	2
119600-66840	11	82
119620-01750	3	5
119620-02020	1	10
119620-11280	4	27
119620-14200	6	1
119620-21941	7	15
119620-59700	12	46
119620-77380	15	3
119620-77421	15	6
119620-77440	15	11
119620-77461	15	13
119620-77471	15	14
119620-77480	15	19
119620-77490	15	15
119620-79200	15	7
119620-79210	15	8
119620-79220	15	9
119620-79230	15	10
119620-79250	15	5
119620-79260	15	17
119620-79280	15	20
119620-79290	15	21
119620-79300	15	22
119620-79310	15	23
119620-79320	15	24
119620-79330	15	25

Parts No.	Fig. No.	Ref. No.
119620-79340	15	26
119620-79350	15	27
119620-79360	15	28
119621-21681	7	14
119623-01250	1	7
119624-32040	2	20
119643-66900	16	35
119645-61070	11	80
119650-77911	16	36
119653-77950	11	121
119655-12560	16	5
119660-01911	2	19
119660-61901	11	64
119717-01331	1	28
119717-01501	2	1
119717-01570	2	3
119717-01611	3	2
119717-01720	3	9
119717-01750	2	18
119717-01770	3	10
119717-01800	2	8
119717-02411	1	13
119717-02930	1	24
119717-03031	4	37
119717-03070	4	38
		39
119717-11101	4	14
119717-11110	4	15
119717-11131	4	16
119717-11190	4	18
119717-11200	4	22
119717-11240	4	23
119717-11260	4	26
119717-11320	4	48
119717-11331	4	49
119717-11340	4	19
119717-11350	4	20
119717-11381	4	36
119717-11650	4	28
119717-11740	4	4
119717-11800	4	60
119717-13109	5	1
119717-13110	5	2
119717-13600	5	3
119717-14400	6	2
119717-14581	6	3
119717-21200	7	5
119717-21650	7	13
119717-21700	7	1
119717-22080	7	16

Parts No.	Fig. No.	Ref. No.
119717-22090	7	34
119717-22300	7	22
119717-22500	7	18
119717-22550	7	36
119717-23000	7	24
119717-23200	7	28
119717-23601	7	29
119717-23611	7	32
119717-23910	7	31
119717-25050	6	10
119717-25101	6	11
119717-25911	6	18
119717-25930	6	16
119717-32050	2	21
119717-32060	8	5
119717-32080	2	11
119717-32100	2	10
119717-32110	2	15
119717-32120	2	16
119717-34801	8	1
119717-35080	8	6
119717-35140	8	3
119717-39210	8	12
119717-42020	9	13
119717-42031	9	4
119717-42041	9	3
119717-42350	9	17
119717-49800	9	23
119717-51150	6	17
119717-51420	10	68
119717-51711	10	93
119717-51750	10	94
119717-51761	10	95
119717-51860	10	97
119717-51930	11	2
119717-53001	12	1
119717-53010	12	3
119717-55650	13	8
119717-59510	12	35
119717-59810	12	20
119717-59820	12	24
119717-59830	12	28
119717-61050	11	3
119717-61070	11	4
119717-77010	14	1
119717-77340	15	31
119717-77801	4	58
119717-77820	4	59
119718-11310	4	47
119734-01580	2	4

Parts No.	Fig. No.	Ref. No.
119744-01521	2	6
119746-21570	7	9
119746-61060	11	79
119746-61080	11	81
119746-61440	11	21
119746-61600	11	78
119761-12020	16	2
119802-03100	4	40
119802-03110	4	41
119802-03121	4	42
119802-03131	4	43
119802-03141	4	44
119802-32130	2	17
119808-12540	16	4
119810-01200	1	27
119810-02941	1	35
119813-59950	12	47
119833-55630	13	1
119833-55640	13	2
119833-55650	13	4
119833-55660	13	5
	16	27
119833-55670	13	6
119840-59570	12	45
119865-21600	7	12
119888-01850	3	4
119940-77270	15	30
119C10-42320	9	11
119E10-42000	9	1
121023-01551	2	32
121111-21501	7	8
121250-44901	9	27
121450-42450	9	26
121520-34810	8	2
121850-51960	2	22
122710-51090	10	9
123501-79240	15	4
124060-01050	1	5
124066-59100	12	43
124085-02220	3	6
124160-01751	2	30
	4	35
124160-01910	1	8
124465-44950	9	28
		29
124766-59050	12	33
	13	14
		17
126650-12680	16	9
129001-32320	2	13

Parts No. Index

Parts No.	Fig. No.	Ref. No.
129001-32330	2	14
129005-59830	8	13
129030-44740	9	19
129044-44500	16	12
129044-44600	16	15
129052-79270	15	18
129053-55640	16	25
129053-55650	16	26
129100-01580	3	1
	7	2
129100-52101	10	113
129107-44590	16	14
129150-11230	4	29
129150-11750	4	31
129150-25301	6	15
129150-59120	12	15
129150-59131	12	18
129155-51020	10	5
129155-51280	10	58
		59
	11	6
129155-51400	10	66
129155-51580	10	90
129155-51701	10	92
129155-52051	10	112
129155-61460	11	77
129210-59080	13	13
129210-59170	12	32
	13	16
129211-77920	16	39
129240-79300	15	12
129242-55750	16	30
129242-55760	16	31
129335-55740	16	28
129335-55750	16	24
129335-55770	16	29
129335-55780	16	33
129350-49530	9	22
129423-77200	15	1
129423-77710	15	16
129457-44760	9	20
129508-11180	4	17
129508-44550	16	13
129601-44560	16	20
129601-44610	16	16
129602-49010	16	22
129612-12650	16	8
129612-49040	16	23
129900-07900	4	56
129900-32130	2	12

Parts No.	Fig. No.	Ref. No.
129901-11450	4	1
129901-53800	12	4
129901-59560	12	41
129916-49740	9	12
129972-77341	15	32
129E00-13610	5	4
158552-61900	11	85
158600-51270	10	57
158600-51410	10	67
158600-51420	10	69
158600-51570	10	89
158600-51790	10	96
171056-49120	9	25
22190-060003	11	83
22190-080002	8	14
		16
22190-100002	11	87
22190-120002	12	53
	13	19
22190-160002	3	13
	10	99
22217-120000	10	100
22242-000120	4	32
22252-000220	7	23
22351-050010	10	101
22351-060012	4	21
22372-040000	11	89
22512-040120	7	6
22857-500100	4	50
		51
22857-500160	4	52
23000-054000	16	40
23010-038000	16	41
23010-044000	16	42
23414-080000	9	14
23857-030000	8	15
23876-005000	4	13
23876-030000	2	9
24311-000320	2	31
	4	53
24311-000440	13	7
	16	34
24341-000240	2	33
25132-003600	9	18
26014-060122	16	19
26014-080702	13	9
26022-050122	10	105
26106-060102	8	10
	11	68
		90

Parts No.	Fig. No.	Ref. No.
26106-060122	2	23
	6	9
26106-060142	11	91
26106-060162	2	24
		34
26106-060202	4	54
	11	92
26106-060352	6	14
26106-060402	2	25
		26
26106-060452	9	21
	11	93
26106-060602	2	27
26106-060652	2	28
26106-060752	4	55
26106-080122	3	14
	9	15
26106-080162	4	57
	13	10
26106-080202	9	24
	15	33
26106-080302	3	15
26106-080402	4	34
26106-080452	3	16
26106-080502	3	17
	9	16
26106-100252	14	35
26106-100452	15	29
26206-100252	3	7
26206-100302	3	8
26306-080002	2	29
	5	6
26366-080002	11	69
26577-060122	9	9
26716-120002	10	107
26756-060002	11	84
		94
26979-050162	4	33
27241-120000	1	14
27241-250000	9	10
719717-01561	1	1
719717-02901	1	29
719717-02911	1	32
719734-01510	2	5
719746-51350	10	1
X0280210331	14	23
X0280626010	14	12
X0280996180	14	3
X0281007750	14	2
X0282005991	14	6

Parts No.	Fig. No.	Ref. No.
X0283006960	14	7
X0284105040	14	13
X0284525010	14	27
X0285007030	14	10
X0285105190	14	4
X0285205030	14	5
X0286105010	14	15
X0286305010	14	17
X0286355010	14	18
X0287405140	14	19
X1280330020	14	33
X1289510130	14	34
X2534000090	14	20
X4284001590	14	8
X9055715000	14	21
X9490065670	14	32
X9490138090	14	25
X9490138100	14	26
X9490138110	14	24
X9490423420	14	30
X9490560750	14	29
X9490561001	15	2
X9490562360	14	28
X9490721360	14	22
X9491034320	14	16
X9491034330	14	14
X9491040990	14	11
X9491050100	14	9