YANMAR

PARTS CATALOG

0CD11-M09700EN

Last update Feb., 2013

PREFACE

1. This parts catalog is the 1st edition of 3TNV76-KUSS for YAMABIKO CORPORATION.

Pub.No. : 0CD11-G09700
Published : February, 2010

2. Model name

Engine model	Vehicle	Vehicle made by
3TNV76-KUSS	SPEED SPRAYOR	YAMABIKO CORPORATION

Directions for the Parts Catalog.

1.This Parts Catalog shows both standard and optional parts.
2.Parts may change without prior notice.
3.The following is an example of the Parts Catalog format.

0CF10-G21601 29. FUEL INJECTION PUMP(W/BOOST)

(A)=4JH-DT
(B)=4JH-DTZ
(C)=4JH-DTZP
(D)=4JH-DTZA
(E)=4JH-DTZY
(F)=

① REF.	② LEV.	PARTS NO.	DESCRIPTION	Q'TY (A)	(B)	(C)	(D)	(E)	(F)	③ I	⑤ R
1	1	729595-51390	FUEL INJECTION PUMP	1	1	1	1	1			1
1-1	1	729595-51391	FUEL INJECTION PUMP	1	1	1	1	1		N	1
	(A=E00185)	(B=E00200)									
3	2	26022-060162	SCREW M 6X 16	9	9	9	9	9			
3-1 ④	2	26022-060162	SCREW M 6X 16	4	4	4	4	4		K	
	(A=E00156)	(B=E00156)	(C=E00156) (D=E00156)	(E=E00156)							
4	2	129470-51040	CAMSHAFT	1	1	1	1	1			
5	2	122710-51050	BEARING, ROLLER	2	2	2	2	2			
6	2	129470-51060	RETAINER	1	1	1	1	1			

Remarks
(1) BOOST COMPEMSATOR TYPE. OPTIONAL PART, TO E00155,(4JH-DT, 4JH-DTZ

①Ref. No.

The Ref. No. listed may not be in accordance with the illustration Ref. No.

(Ex.) Illustration No. 1 List Ref No. 1 (Before change) → 1- 1 (After change)

For interchangeable symbols N, R and K, illustrations for new parts may be abbreviated.

②Lev. (Level)

Level indication
The numbers below indicate the level of relativity towards the main part.
1 ----- Main parts (Assembly parts)
2 ----- Sub component included in " 1 ".
3 ----- Sub component included in " 2 ".
Note) Parts that are not for sale are partially illustrated but not listed.

③Interchangeability Symbol

When a part change takes place, one of the following interchangeability symbols is indicated beside the part.

Symbol	Interchangeability	Contents note
N	Old ← Yes / No → New	New Part is interchangeable for Old Part but Old Part is not interchangeable for New Part.
Q	Old ← No / Yes → New	New Part is not interchangeable for Old Part but Old Part is interchangeable for New Part.
R	Old ← Yes / Yes → New	New/ Old Parts are both interchangeable.
S	Old ← No / No → New	New/ Old Parts are both not interchangeable.
W		Part newly added.
Z		Part discontinued.
F		Not interchangeable by a single part but interchangeable together with related parts.
K		Changes only for used parts quantities.

④Effective Machine No.

When a part changes, the effective Machine No. will be indicated in the (A)-(F) column.

Product Symbol	Product No.	Product Symbol	Product No.
C	Clutch No. Compressor No.	F	Machine No. (Agricultural Equip.)
D	Drive No.	M	Machine No.
E	Engine No.		

Note 1) A date may follow the symbol. (Ex.) 1996.01
Note 2) " XXXXX " and " ZZZZZ " are for parts that could not be predicted or for engine models that could not be identified.
Note 3) (A=E00185) is the E (Engine Serial Number) for the column (A) model (in this case 4JH-DT) after the parts design change.

⑤Remarks

Figures or alphabets (symbols) are entered in the remarks column.
The comments (remarks) on parts that are indicated at the bottom of the illustration are the same symbols as those stated above.

Contents

0CD11-M09700

Fig. No.	Fig. Name
3TNV76-KUSS	
1.	CYLINDER BLOCK
2.	GEAR HOUSING
3.	FLANGE MOUNTING & OIL SUMP
4.	CYLINDER HEAD & BONNET
5.	AIR CLEANER
6.	EXHAUST MANIFOLD & SILENCER
7.	CAMSHAFT & DRIVING GEAR
8.	CRANKSHAFT & PISTON
9.	LUB.OIL SYSTEM
10.	COOLING WATER SYSTEM
11.	RADIATOR
12.	FUEL INJECTION PUMP
13.	GOVERNOR
14.	FUEL INJECTION VALVE
15.	FUEL LINE
16.	STARTING MOTOR
17.	GENERATOR

Fig. No.	Fig. Name

0CD11-M09700 3TNV76-KUSS

Fig.1. CYLINDER BLOCK

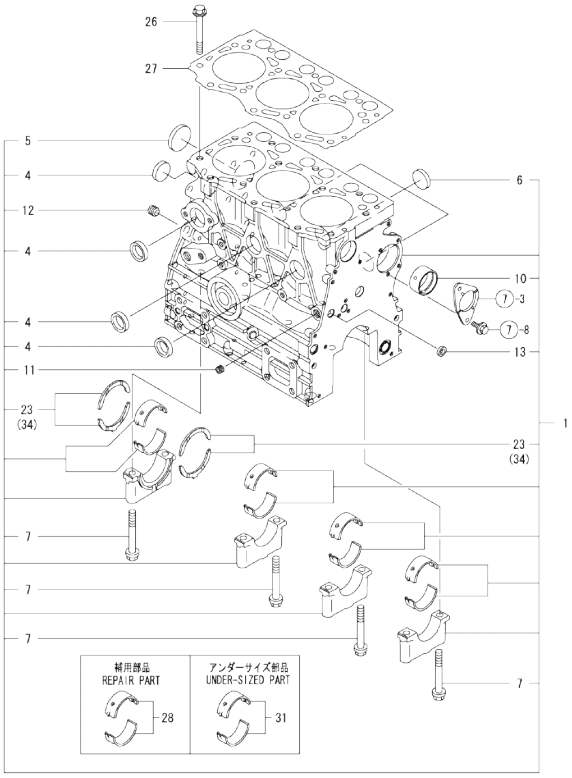

Remarks
(1)REPAIR PART.
(2)UNDER SIZED(U.S.=0.25)PART.
(3)OVER SIZED(O.S.=0.25)PART.

(A)=3TNV76-KUSS (D)=
(B)= (E)=
(C)= (F)=

No.	Lev.	Parts No.	Description	Q'ty (A)	(B)	(C)	(D)	(E)	(F)	I	R
1	1	719717-01561	BLOCK ASSY, CYLINDER	1							
4	2	105311-01090	PLUG, 30	4							
5	2	119623-01250	PLUG, 45	1							
6	2	119285-01990	PLUG, 25	3							
7	2	119620-02020	BOLT, METAL CAP	8							
10	2	119717-02411	BUSH, CAMSHAFT	1							
11	2	124060-01050	PLUG, PT1/8	1							
12	2	124160-01910	PLUG, PT1/4	1							
13	2	27241-120000	PLUG, 12	1							
23	2	119717-02930	BEARING, THRUST	2							
26	1	119810-01200	BOLT, HEAD	14							
27	1	119717-01330	GASKET, HEAD	1							
28	1	719717-02901	BEARING, MAIN	4							1
31	1	719717-02911	BEARING, 0.25 US	4							2
34	1	119810-02941	BEARING, THRUST 0.25	2							3

N:Old ←Yes/No→ New. Q:Old ←No/Yes→ New, R:Old ←Yes/Yes→ New, S:Old ←No/No→ New. W:Add. Z:Discontinued. F:Interchangeable by set. K:Q'ty Change

Copyright (C) YANMAR CO., LTD. All RightsReserved.

Fig.2. GEAR HOUSING

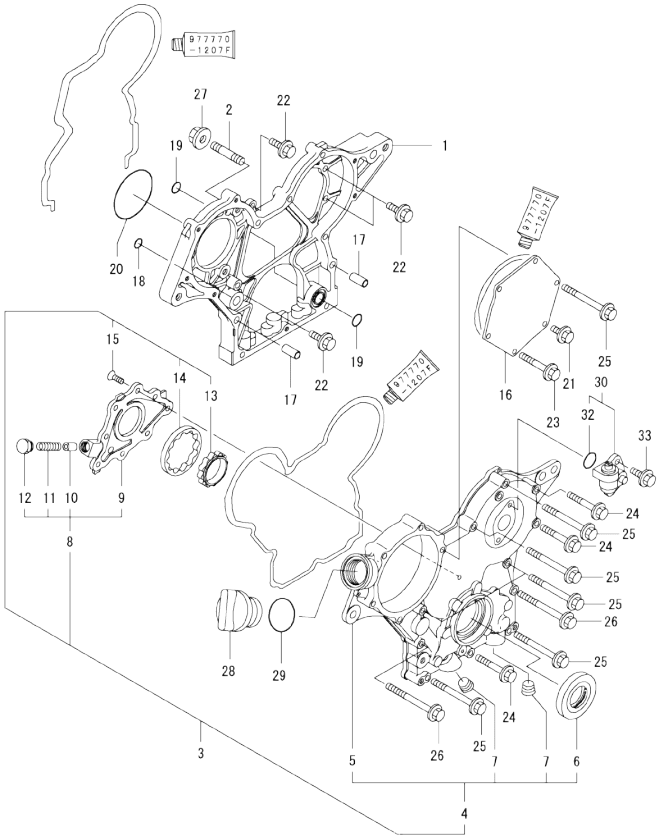

(A)=3TNV76-KUSS
(B)=
(C)=
(D)=
(E)=
(F)=

No.	Lev.	Parts No.	Description	Q'ty (A)	(B)	(C)	(D)	(E)	(F)	I	R
1	1	119717-01501	CASE, GEAR	1							
2	1	119717-01570	STUD	3							
3	1	119734-01580	CASE ASSY, GEAR	1							
4	2	719734-01510	CASE ASSY, GEAR	1							
5	3	119744-01521	COVER, GEAR CASE	1							
6	3	119717-01800	SEAL, OIL	1							
7	3	23876-030000	PLUG, R03	2							
8	2	119717-32100	COVER ASSY	1							
9	3	119717-32080	COVER	1							
10	3	129900-32130	VALVE, RELIEF	1							
11	3	129001-32320	SPRING	1							
12	3	129001-32330	PLUG	1							
13	2	119717-32110	ROTOR, INNER	1							
14	2	119717-32120	ROTOR, OUTER	1							
15	2	119802-32130	SCREW, M6X16	8							
16	1	119717-01750	COVER	1							
17	1	119660-01911	PIPE, KNOCK	4							
18	1	119624-32040	O-RING, P12.0	1							
19	1	119717-32050	O-RING, P17.0	3							
20	1	121850-51960	O-RING	1							
21	1	26106-060122	BOLT, M6X 12 PLATED	1							
22	1	26106-060162	BOLT, M6X 16 PLATED	4							
23	1	26106-060402	BOLT, M6X 40 PLATED	4							
24	1	26106-060402	BOLT, M6X 40 PLATED	3							
25	1	26106-060602	BOLT, M6X 60 PLATED	7							
26	1	26106-060652	BOLT, M6X 65 PLATED	2							
27	1	26306-080002	NUT, M8	3							
28	1	124160-01751	COVER, FILLER	1							
29	1	24311-000320	O-RING, 1AP32.0	1							
30	1	129150-91400	GEAR	1							
32	2	24341-000240	O-RING, 1AS24.0	1							
33	1	26106-060162	BOLT, M6X 16 PLATED	2							

N:Old ←Yes/No→ New. Q:Old ←No/Yes→ New. R:Old ←Yes/Yes→ New. S:Old ←No/No→ New. W:Add. Z:Discontinued. F:Interchangeable by set. K:Q'ty Change

Copyright (C) YANMAR CO., LTD. All RightsReserved.

Fig.3. FLANGE MOUNTING & OIL SUMP

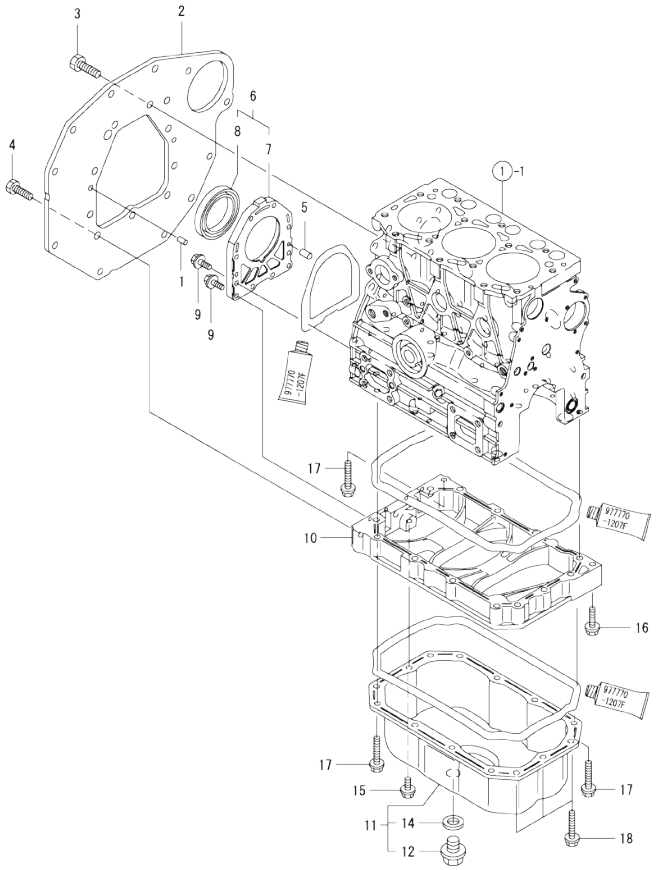

(A)=3TNV76-KUSS (D)=
(B)= (E)=
(C)= (F)=

No.	Lev.	Parts No.	Description	Q'ty (A)	(B)	(C)	(D)	(E)	(F)	I	R
1	1	129100-01580	PIN, M8X16	2							
2	1	119717-01620	FLANGE, MOUNTING	1							
3	1	26116-100202	BOLT, M10X 20 PLATED	9							
4	1	26206-100252	BOLT, M10X 25 PLATED	3							
5	1	119620-01620	PIN, M6X10	2							
6	1	119734-01640	CASE ASSY, OIL SEAL	1							
7	2	119660-01651	CASE, OIL SEAL	1							
8	2	119734-02220	SEAL, OIL	1							
9	1	26106-060222	BOLT, M6X 22 PLATED	10							
10	1	119717-01720	SPACER, OIL SUMP	1							
11	1	119717-01770	SUMP ASSY, OIL	1							
12	2	105425-01690	PLUG, 16	1							
14	2	22190-160002	WASHER, SEAL 16	1							
15	1	26106-080122	BOLT, M8X 12 PLATED	1							
16	1	26106-080302	BOLT, M8X 30 PLATED	1							
17	1	26106-080452	BOLT, M8X 45 PLATED	11							
18	1	26106-080502	BOLT, M8X 50 PLATED	3							

N:Old ←Yes/No→ New. Q:Old ←No/Yes→ New. R:Old ←Yes/Yes→ New. S:Old ←No/No→ New. W:Add. Z:Discontinued. F:Interchangeable by set. K:Q'ty Change

Copyright (C) YANMAR CO., LTD. All RightsReserved.

Fig.4. CYLINDER HEAD & BONNET

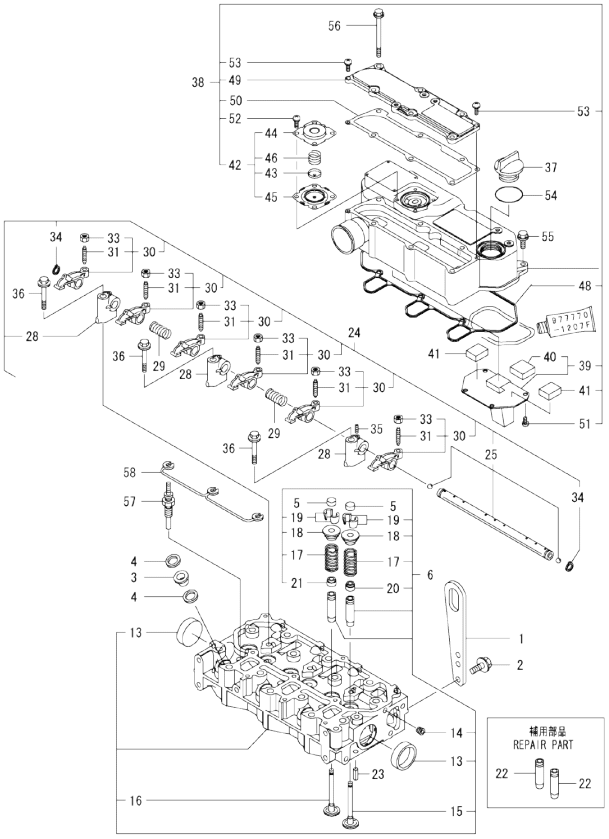

(A)=3TNV76-KUSS
(B)=
(C)=
(D)=
(E)=
(F)=

No.	Lev.	Parts No.	Description	Q'ty (A)	(B)	(C)	(D)	(E)	(F)	I	R
1	1	129900-07900	LIFTER	1							
2	1	26106-080162	BOLT, M8X 16 PLATED	2							
3	1	129901-11450	PROTECTOR, NOZZLE	3							
4	1	119600-11460	GASKET, NOZZLE	6							
5	1	105010-11490	CAP, VALVE	6							
6	1	119717-11740	HEAD ASSY, CYLINDER	1							
13	2	119285-11990	PLUG, 35	2							
14	2	23876-005000	PLUG, R005	1							
15	2	119717-11101	VALVE, INTAKE	3							
16	2	119717-11110	VALVE, EXHAUST	3							
17	2	119717-11131	SPRING, VALVE	6							
18	2	129508-11180	RETAINER, SPRING	6							
19	2	119717-11190	COTTER	12							
20	2	119717-11340	SEAL, VALVE STEM	3							
21	2	119717-11350	SEAL, VALVE STEM	3							
22	1	119717-11800	GUIDE, VALVE	6							1
23	1	22351-060012	PIN, SPRING 6.0X12	2							
24	1	119717-11200	SUPPORT ASSY, ARM	1							
25	2	119717-11240	SHAFT ASSY, ROCKER	1							
28	2	119717-11260	SUPPORT, ROCKER ARM	3							
29	2	119620-11280	SPRING	2							
30	2	119717-11650	ARM, ROCKER	6							
31	3	129150-11230	SCREW, VALVE ADJUST	6							
33	3	129150-11750	NUT, M8	6							
34	2	22242-000120	RING, 12	2							
35	2	26979-050162	SCREW, M5X16	1							
36	1	26106-080402	BOLT, M8X 40 PLATED	3							
37	1	124160-01751	COVER, FILLER	1							
38	1	119717-11381	BONNET ASSY, HEAD	1							
39	2	119717-03031	PLATE	1							
40	3	119717-03070	BAFFLE, BREATHER	1							
41	2	119717-03070	BAFFLE, BREATHER	2							
42	2	119802-03100	DIAPHRAGM ASSY	1							
43	3	119802-03110	PLATE	1							
44	3	119802-03121	COVER, DIAPHRAGM	1							
45	3	119802-03131	DIAPHRAGM	1							
46	3	119802-03141	SPRING, DIAPHRAGM	1							
48	2	119718-11310	GASKET, BONNET	1							
49	2	119717-11320	COVER, BONNET	1							
50	2	119717-11331	GASKET	1							
51	2	22857-500100	SCREW, 5X10	4							
52	2	22857-500100	SCREW, 5X10	4							
53	2	22857-500160	SCREW, 5X16	2							
54	1	24311-000320	O-RING, 1AP32.0	1							
55	1	26106-060202	BOLT, M6X 20 PLATED	3							
56	1	26106-060752	BOLT, M6X 75 PLATED	6							
57	1	119717-77800	PLUG, GLOW	3							
58	1	119717-77820	CONNECTOR, GLOW PLUG	1							

Remarks
(1)REPAIR PART.

N:Old $\xleftarrow[\text{No}]{\text{Yes}}$ New. Q:Old $\xleftarrow[\text{Yes}]{\text{No}}$ New. R:Old $\xleftarrow[\text{Yes}]{\text{Yes}}$ New. S:Old $\xleftarrow[\text{No}]{\text{No}}$ New. W:Add. Z:Discontinued. F:Interchangeable by set. K:Q'ty Change

Copyright (C) YANMAR CO., LTD. All RightsReserved.

0CD11-M09700 3TNV76-KUSS

Fig.5. AIR CLEANER

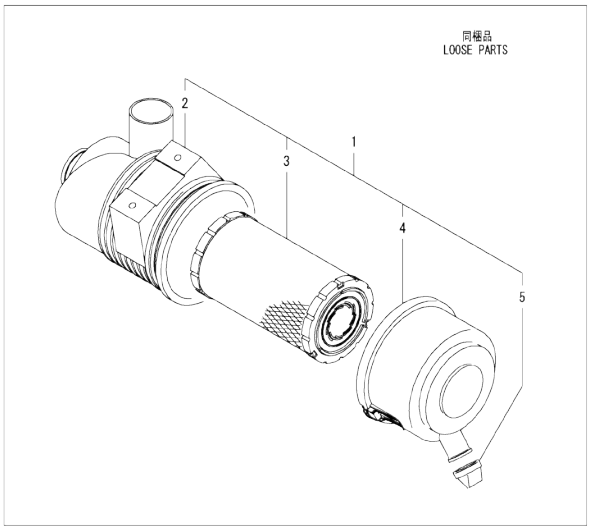

0CD11-M09700 Fig.5

(A)=3TNV76-KUSS
(B)=
(C)=
(D)=
(E)=
(F)=

No.	Lev.	Parts No.	Description	Q'ty (A)	(B)	(C)	(D)	(E)	(F)	I	R
1	1	129608-12501	CLEANER ASSY, AIR	1							
2	2	129608-12511	BODY, AIR CLEANER	1							
3	2	119808-12520	ELEMENT	1							
4	2	119808-12530	COVER	1							
5	2	119808-12540	VALVE, UNLOADER	1							

N:Old ◄Yes/No► New. Q:Old ◄No/Yes► New, R:Old ◄Yes/Yes► New. S:Old ◄No/No► New. W:Add. Z:Discontinued. F:Interchangeable by set. K:Q'ty Change

Copyright (C) YANMAR CO., LTD. All RightsReserved.

Fig.6. EXHAUST MANIFOLD & SILENCER

(A)=3TNV76-KUSS
(B)=
(C)=
(D)=
(E)=
(F)=

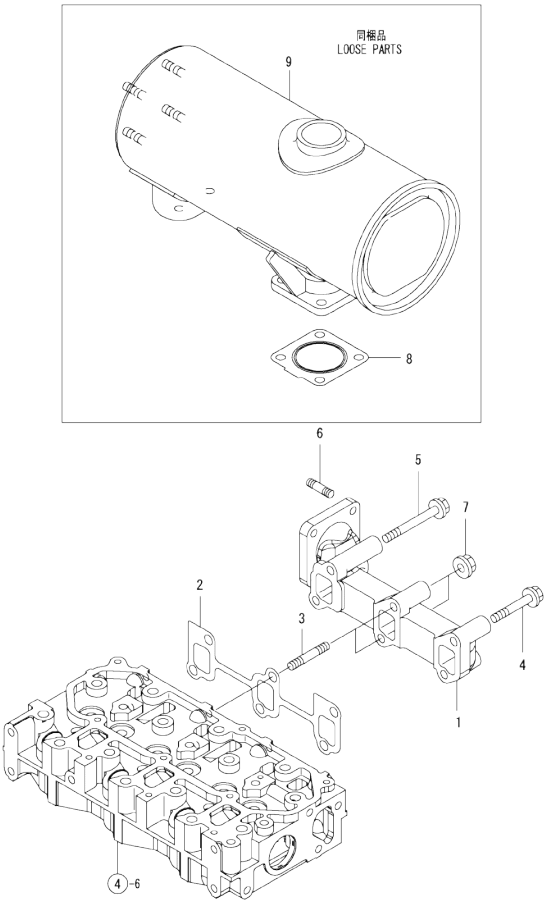

No.	Lev.	Parts No.	Description	Q'ty (A)	(B)	(C)	(D)	(E)	(F)	I	R
1	1	119740-13100	MANIFOLD, EXHAUST	1							
2	1	119717-13110	GASKET	1							
3	1	119717-13600	STUD, M8X50	2							
4	1	119802-13620	BOLT, M8X50	2							
5	1	123900-13620	BOLT, M8X70	2							
6	1	119131-18320	STUD, M8X22	4							
7	1	26306-080002	NUT, M8	2							
8	1	119515-13200	GASKET, SILENCER	3							
9	1	119717-13500	SILENCER	1							

N:Old ←Yes/No→ New. Q:Old ←No/Yes→ New. R:Old ←Yes/Yes→ New. S:Old ←No/No→ New. W:Add. Z:Discontinued. F:Interchangeable by set. K:Q'ty Change

Copyright (C) YANMAR CO., LTD. All RightsReserved.

Fig.7. CAMSHAFT & DRIVING GEAR

(A)=3TNV76-KUSS
(B)=
(C)=
(D)=
(E)=
(F)=

No.	Lev.	Parts No.	Description	Q'ty (A)	(B)	(C)	(D)	(E)	(F)	I	R
1	1	119620-14200	TAPPET	6							
2	1	119717-14400	ROD, PUSH	6							
3	1	119717-14581	CAMSHAFT ASSY	1							
8	1	26106-060122	BOLT, M6X 12 PLATED	2							
9	1	119717-25050	SHAFT, IDLE	1							
10	1	119717-25101	GEAR ASSY, IDLE	1							
13	1	119717-25911	BUSH, IDLE GEAR	1							1
14	1	26106-060352	BOLT, M6X 35 PLATED	3							
15	1	129150-25301	BOLT	4							
16	1	119717-25930	GEAR, PUMP	1							

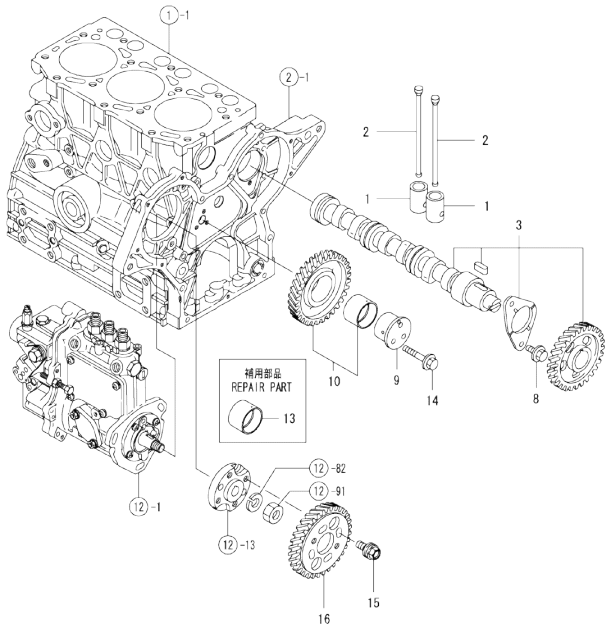

Remarks
(1)REPAIR PART.

N:Old ←Yes/No→ New. Q:Old ←No/Yes→ New. R:Old ←Yes/Yes→ New. S:Old ←No/No→ New. W:Add. Z:Discontinued. F:Interchangeable by set. K:Q'ty Change

Copyright (C) YANMAR CO., LTD. All RightsReserved.

Fig.8. CRANKSHAFT & PISTON

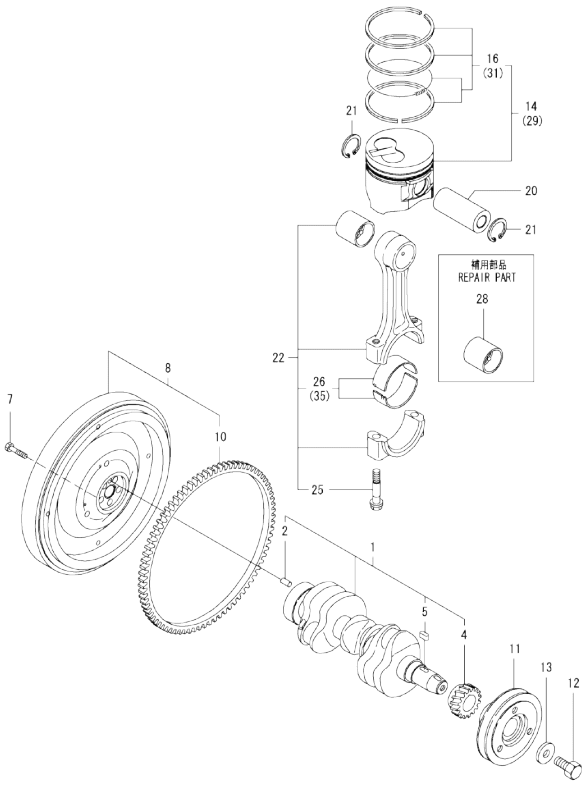

Remarks
(1)REPAIR PART.
(2)UNDER SIZED(U.S.=0.25)PART.
(3)OVER SIZED(O.S.=0.25)PART.

(A)=3TNV76-KUSS
(B)=
(C)=
(D)=
(E)=
(F)=

No.	Lev.	Parts No.	Description	Q'ty (A)	(B)	(C)	(D)	(E)	(F)	I	R
1	1	119717-21700	CRANKSHAFT ASSY	1							
2	2	129100-01580	PIN, M8X16	1							
4	2	119717-21200	GEAR, CRANKSHAFT	1							
5	2	22512-040120	KEY, 4X 12	1							
7	1	119620-21500	BOLT, FLYWHEEL	5							
8	1	119761-21590	FLYWHEEL ASSY	1							
10	2	119865-21600	GEAR, RING	1							
11	1	119717-21650	V-PULLEY	1							
12	1	119621-21681	BOLT, FLANGE 12X1.25	1							
13	1	119620-21941	WASHER	1							
14	1	119717-22080	PISTON ASSY	3							
16	2	119717-22500	RING SET, PISTON	3							
20	1	119717-22300	PIN, PISTON	3							
21	1	22252-000220	RING, 22	6							
22	1	119717-23000	ROD ASSY, CONNECTING	3							
25	2	119717-23200	BOLT, CONNECTING ROD	6							
26	2	119717-23601	BEARING, CRANK PIN	3							
28	1	119717-23910	BEARING, PISTON PIN	3							1
29	1	119717-22900	PISTON ASSY, 0.25 OS	3							3
31	2	119717-22550	RING SET, 0.25 OS	3							3
35	1	119717-23611	METAL ASSY, 0.25	3							2

N:Old ←Yes/No→ New. Q:Old ←No/Yes→ New, R:Old ←Yes/Yes→ New, S:Old ←No/No→ New, W:Add, Z:Discontinued, F:Interchangeable by set, K:Q'ty Change

Copyright (C) YANMAR CO., LTD. All RightsReserved.

Fig.9. LUB.OIL SYSTEM

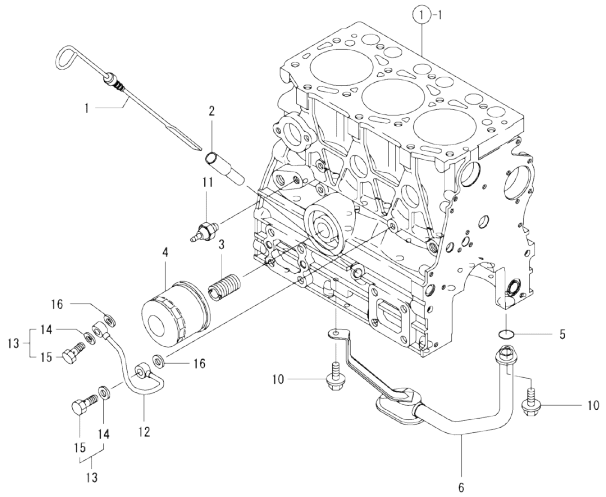

(A)=3TNV76-KUSS
(B)=
(C)=
(D)=
(E)=
(F)=

No.	Lev.	Parts No.	Description	Q'ty (A)	(B)	(C)	(D)	(E)	(F)	I	R
1	1	119717-34801	DIPSTICK, OIL	1							
2	1	121520-34810	GUIDE, DIPSTICK	1							
3	1	129100-35140	STUD	1							
4	1	119305-35151	FILTER ASSY, D68XL65	1							1
5	1	119717-32060	O-RING, P15.0	1							
6	1	119717-35080	PIPE ASSY, OIL INLET	1							
10	1	26106-060102	BOLT, M6X 10 PLATED	2							
11	1	114250-39450	SWITCH, 0.5KG	1							
12	1	119717-39210	PIPE, OIL	1							
13	1	129005-59830	BOLT ASSY, JOINT M8	2							
14	2	22190-080002	WASHER, SEAL 6	2							
15	2	23857-030000	BOLT, JOINT 3	2							
16	1	22190-080002	WASHER, SEAL 6	2							

Remarks
(1)REPAIR PART.

N:Old ←Yes/No→ New. Q:Old ←No/Yes→ New. R:Old ←Yes/Yes→ New. S:Old ←No/No→ New. W:Add. Z:Discontinued. F:Interchangeable by set. K:Q'ty Change

Copyright (C) YANMAR CO., LTD. All RightsReserved.

Fig.10. COOLING WATER SYSTEM

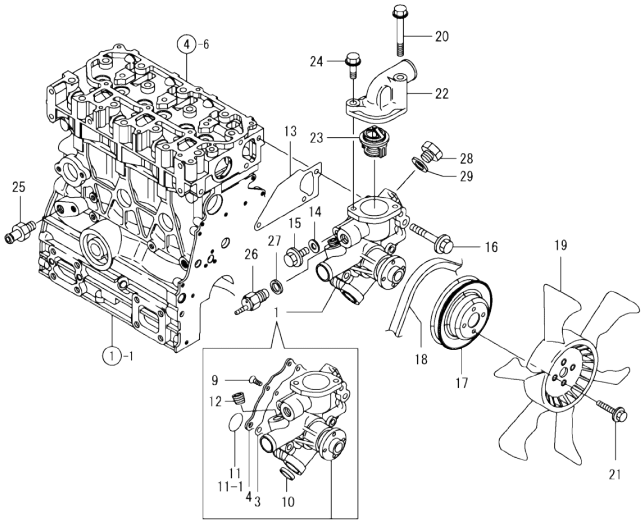

(A)=3TNV76-KUSS (D)=
(B)= (E)=
(C)= (F)=

No.	Lev.	Parts No.	Description	Q'ty (A)	(B)	(C)	(D)	(E)	(F)	I	R
1	1	119717-42002	PUMP ASSY, WATER	1							
1-1	1	119E10-42000	PUMP ASSY, WATER	1						N	
	(A=EA9962)										
3	2	119717-42031	GASKET	1							
4	2	119717-42041	COVER	1							
9	2	26577-060122	SCREW, M6X12	4							
10	2	27241-250000	PLUG, 25	1							
11	2	119717-42320	O-RING, P26	1							
11-1	2	119C10-42320	O-RING, 2028	1						S	
	(A=EA9962)										
12	2	129916-49740	PLUG, R3/8	1							
13	1	119717-42020	GASKET, WATER PUMP	1							
14	1	23414-080000	GASKET, 8X1.0	1							
15	1	26106-080122	BOLT, M8X 12 PLATED	1							
16	1	26106-080502	BOLT, M8X 50 PLATED	3							
17	1	119515-42350	V-PULLEY, D=110	1							
18	1	119865-42290	V-BELT, A36.5	1							
19	1	129335-44740	FAN, COOLING D335	1							
20	1	26106-080602	BOLT, M8X 60 PLATED	1							
21	1	26106-060122	BOLT, M6X 12 PLATED	4							
22	1	124101-49531	COVER, THERMOSTAT	1							
23	1	119717-49800	THERMOSTAT, 71C	1							
24	1	26106-080252	BOLT, M8X 25 PLATED	1							
25	1	121550-49111	JOINT, PT1/4	1							
26	1	121250-44901	SWITCH, THERMO 110	1							
27	1	124465-44950	GASKET, 16	1							
28	1	121450-42450	PLUG, M16	1							
29	1	124465-44950	GASKET, 16	1							

N:Old ←Yes/No→ New. Q:Old ←No/Yes→ New. R:Old ←Yes/Yes→ New. S:Old ←No/No→ New. W:Add. Z:Discontinued. F:Interchangeable by set. K:Q'ty Change

Copyright (C) YANMAR CO., LTD. All RightsReserved.

Fig.11. RADIATOR

(A)=3TNV76-KUSS
(B)=
(C)=
(D)=
(E)=
(F)=

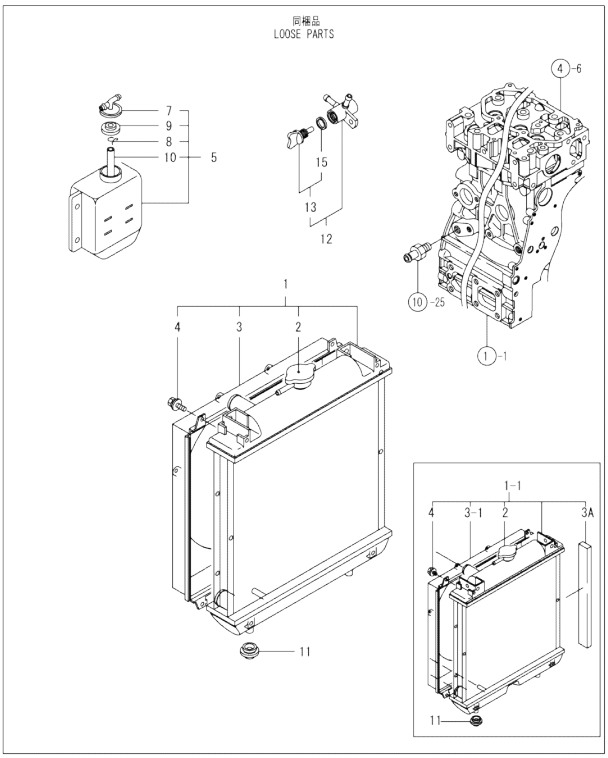

No.	Lev.	Parts No.	Description	Q'ty (A)	(B)	(C)	(D)	(E)	(F)	I	R
1	1	119802-44520	RADIATOR ASSY	1							
1-1	1	129004-44520	RADIATOR ASSY	1						F	
	(A=EA5124)										
2	2	129107-44590	CAP, RADIATOR	1							
3	2	119802-44600	SHROUD	1							
3-1	2	129004-44600	SHROUD	1						S	
	(A=EA5124)										
3A	2	129004-44610	GASKET	1						W	
	(A=EA5124)										
4	2	26014-060122	BOLT, M6X 12	4							
5	1	121468-44520	TANK ASSY, SUB	1							
7	2	121450-44531	CAP	1							
8	2	124450-44560	RETAINER	1							
9	2	121470-44581	GASKET	1							
10	2	23065-070130	PIPE, 7X 130	1							
11	1	119255-44660	ABSORBER	2							
12	1	129150-49100	COCK ASSY, 3-WAY	1							
13	2	129150-49080	COCK, DRAIN	1							
15	3	119629-49080	GASKET	1							

Remarks
(1) Interchangeable by simultaneous replacement with Ref.1 and Ref.1-1.

N:Old ←Yes/No→ New. Q:Old ←No/Yes→ New, R:Old ←Yes/Yes→ New. S:Old ←No/No→ New. W:Add. Z:Discontinued. F:Interchangeable by set. K:Q'ty Change

Copyright (C) YANMAR CO., LTD. All RightsReserved.

Fig.12. FUEL INJECTION PUMP

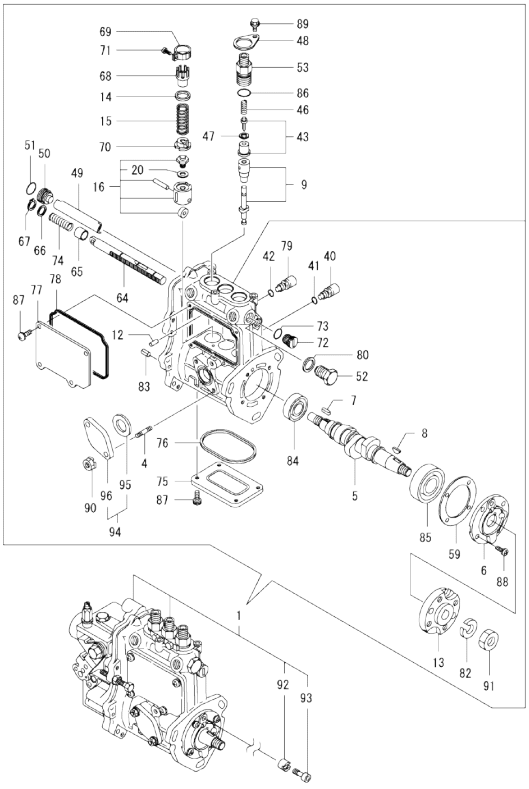

Remarks
(1)GOVERNOR ASSY(FIG.13) IS INCORPORATED IN THIS FOP.CMP (REF.NO.1).

(A)=3TNV76-KUSS (D)=
(B)= (E)=
(C)= (F)=

No.	Lev.	Parts No.	Description	Q'ty (A)	(B)	(C)	(D)	(E)	(F)	I	R
1	1	719761-51390	PUMP ASSY, INJECTION	1							1
4	2	129155-51020	STUD	2							
5	2	119717-51030	CAMSHAFT	1							
6	2	119717-51060	SUPPORT, CAMSHAFT	1							
7	2	119717-51070	KEY	1							
8	2	122710-51090	KEY	1							
9	2	119740-51100	PLUNGER ASSY	3							
12	2	129155-51140	PIN	3							
13	2	119717-51150	FLANGE	1							
14	2	158600-51170	RETAINER, SPRING	3							
15	2	119717-51190	SPRING, PLUNGER	3							
16	2	119717-51200	TAPPET ASSY	3							
20	3	129155-51600	SHIM SET, ADJUSTING	3							
40	2	158600-51270	STOPPER, TAPPET	3							
41	2	129155-51280	O-RING, S6	3							
42	2	129155-51280	O-RING, S6	1							
43	2	119717-51300	VALVE ASSY, DELIVERY	3							
46	2	119717-51330	SPRING, DELIVERY	3							
47	2	124550-51350	GASKET, DELIVERY	3							
48	2	118400-51370	LOCKING	3							
49	2	129155-51400	DEFLECTOR	1							
50	2	158600-51410	PLUG, DEFLECTOR	1							
51	2	119717-51420	O-RING	1							
52	2	158600-51420	PLUG, DEFLECTOR	1							
53	2	158600-51442	VALVE ASSY, DELIVERY	3							
59	2	129155-51450	SHIM SET, ADJUSTING	1							
64	2	119717-51500	RACK, CONTROL	1							
65	2	129155-51521	BUSH, RACK	1							
66	2	129155-51530	SPACER	1							
67	2	129155-51540	CIRCLIP	1							
68	2	129155-51550	PINION, CONTROL	3							
69	2	129100-51560	PINION	3							
70	2	119717-51570	RETAINER, SPRING	3							
71	2	129100-51570	SCREW	3							
72	2	158600-51570	PLUG	1							
73	2	129155-51580	O-RING	1							
74	2	129155-51591	SPRING, RACK	1							
75	2	129155-51701	COVER	1							
76	2	119717-51711	GASKET	1							
77	2	119717-51750	COVER	1							
78	2	119717-51761	GASKET	1							
79	2	158600-51790	STOOPER, RACK	1							
80	2	22190-160002	WASHER, SEAL 16	1							
82	2	22217-120000	WASHER, SPRING 12	1							
83	2	22351-050010	PIN, SPRING 5.0X10	2							
84	2	24101-060034	BEARING, BALL 6003	1							
85	2	24101-063034	BEARING, BALL 6303	1							
86	2	24316-000150	O-RING, 4DP15.0	3							
87	2	26022-050122	SCREW, M5X12	8							
88	2	26022-060162	SCREW, M6X16	4							
89	2	26106-050102	BOLT, M5X 10 PLATED	3							

N:Old ←Yes/No→ New. Q:Old ←No/Yes→ New. R:Old ←Yes/Yes→ New. S:Old ←No/No→ New. W:Add. Z:Discontinued. F:Interchangeable by set. K:Q'ty Change

++ CONTINUE ++

Copyright (C) YANMAR CO., LTD. All RightsReserved.

Fig.12. FUEL INJECTION PUMP

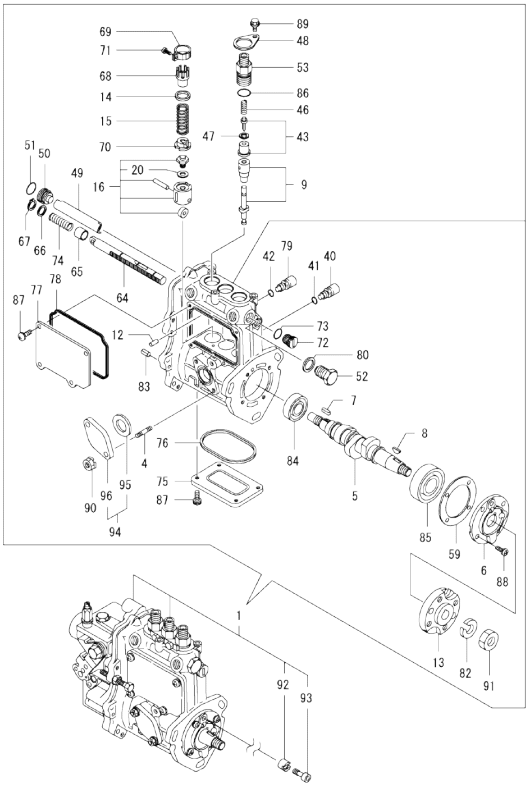

Remarks
(1)GOVERNOR ASSY(FIG.13) IS
INCORPORATED IN THIS FOP.CMP
(REF.NO.1).

(A)=3TNV76-KUSS (D)=
(B)= (E)=
(C)= (F)=

No.	Lev.	Parts No.	Description	Q'ty (A)	(B)	(C)	(D)	(E)	(F)	I	R
90	2	119717-51860	NUT, M6	2							
91	2	26716-120002	NUT, M12	1							
92	2	119717-51480	COLLAR	1							
93	2	119717-51490	BOLT	1							
94	2	129255-52000	COVER ASSY	1							
95	3	129155-52051	GASKET	1							
96	3	129100-52200	COVER	1							

N:Old ←Yes/No→ New. Q:Old ←No/Yes→ New. R:Old ←Yes/Yes→ New. S:Old ←No/No→ New. W:Add. Z:Discontinued. F:Interchangeable by set. K:Q'ty Change

Copyright (C) YANMAR CO., LTD. All RightsReserved.

Fig.13. GOVERNOR

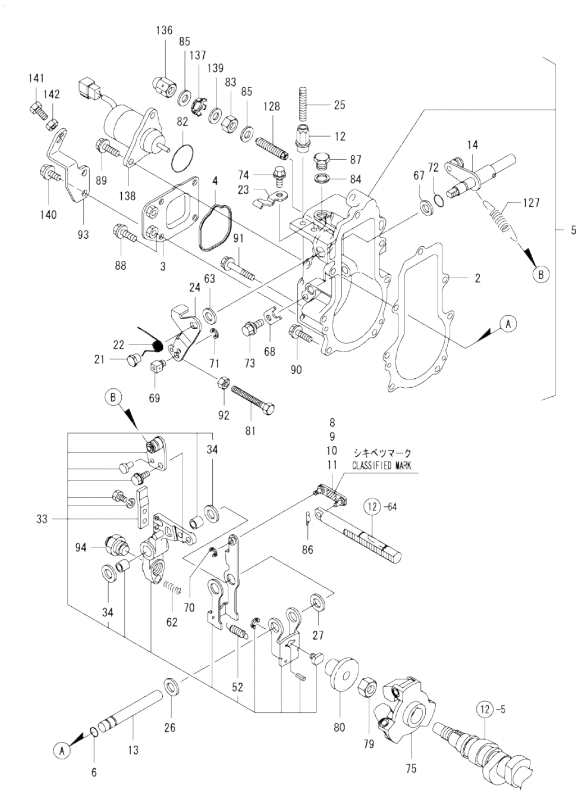

Remarks
(1)SELECTIVE PARTS;CERTAIN THE CLASSIFICATION MARK,THEN PLACE YOUR ORDER.(REF.TO.ILLUSTRATION).
* THIS FIGURE(GOVERNOR ASSY)IS INCORPORATED IN THE FUEL INJECTION PUMP ASSY(FIG.12).

(A)=3TNV76-KUSS (D)=
(B)= (E)=
(C)= (F)=

No.	Lev.	Parts No.	Description	Q'ty (A)	(B)	(C)	(D)	(E)	(F)	I	R
2	2	119717-61050	GASKET	1							
3	2	119761-61060	COVER, GOVERNOR CASE	1							
4	2	119717-61070	GASKET	1							
5	2	119751-61100	CASE ASSY, GOVERNOR	1							
6	3	129155-51280	O-RING, S6	1							
8	3	119717-61120	LINK, MARK :3	1							1
9	3	119717-61130	LINK, MARK 98	1							1
10	3	119717-61140	LINK, MARK 88	1							1
11	3	119717-61150	LINK, MARK 03	1							1
12	3	129209-61370	NUT, M6	1							
13	3	129052-61390	SHAFT	1							
14	3	119717-61400	SHAFT ASSY	1							
21	3	129255-61410	NUT, LOCK	1							
22	3	119534-61420	SPRING	1							
23	3	119534-61430	RETAINER	1							
24	3	119515-61440	LEVER, CONTROL	1							
25	3	129155-61450	BOLT, LIMITER	1							
26	3	129156-61460	SHIM, T=0.6	1							
27	3	129155-61480	SPACER ASSY	1							
33	3	119761-61500	LEVER ASSY, GOVERNOR	1							
34	4	174307-51700	SHIM SET	2							
52	4	129486-61540	SPRING, SET	1							
62	3	129100-61650	SPRING, CONTROLLER	1							
63	3	158552-61700	SHIM SET	1							
67	3	158552-61710	SHIM, T=1.0	1							
68	3	119660-61901	RETAINER, SHAFT	1							
69	3	124756-67510	RETAINER	1							
70	3	22272-000030	RING, E- 3	1							
71	3	22272-000070	RING, E- 7	1							
72	3	24341-000070	O-RING, 1AS7.0	1							
73	3	26106-060102	BOLT, M6X 10 PLATED	1							
74	3	26106-060102	BOLT, M6X 10 PLATED	1							
75	2	119717-61201	WEIGHT ASSY,GOVERNOR	1							
79	2	129008-61301	NUT	1							
80	2	129155-61341	SLEEVE	1							
81	2	129155-61460	BOLT, IDLE	1							
82	2	158552-61900	O-RING	1							
83	2	129209-61920	NUT, ARB	1							
84	2	22190-100002	WASHER, SEAL 10	1							
85	2	22190-120002	WASHER, SEAL 12	2							
86	2	22372-040000	PIN, SNAP 4	1							
87	2	23887-100002	PLUG, 10	1							
88	2	26106-060102	BOLT, M6X 10 PLATED	4							
89	2	26106-060142	BOLT, M6X 14 PLATED	2							
90	2	26106-060202	BOLT, M6X 20 PLATED	4							
91	2	26106-060452	BOLT, M6X 45 PLATED	3							
92	2	26756-060002	NUT, LOCK M6	1							
93	2	119761-61080	SUPPORT, WIRE	1							
94	2	119513-61550	ANGLEICH ASSY	1							
127	2	119761-61700	SPRING, GOVERNOR	1							
128	2	158601-61700	LIMITER ASSY, FUEL	1							

N:Old ←Yes/No→ New. Q:Old ←No/Yes→ New. R:Old ←Yes/Yes→ New. S:Old ←No/No→ New. W:Add. Z:Discontinued. F:Interchangeable by set. K:Q'ty Change

++ CONTINUE ++

Copyright (C) YANMAR CO., LTD. All RightsReserved.

Fig.13. GOVERNOR

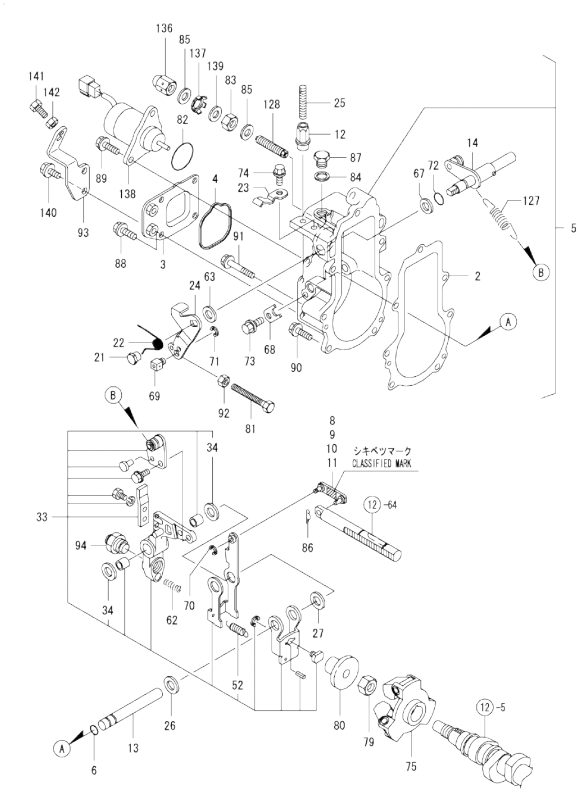

Remarks
(1)SELECTIVE PARTS;CERTAIN THE CLASSIFICATION MARK,THEN PLACE YOUR ORDER.(REF.TO.ILLUSTRATION).
* THIS FIGURE(GOVERNOR ASSY)IS INCORPORATED IN THE FUEL INJECTION PUMP ASSY(FIG.12).

(A)=3TNV76-KUSS (D)=
(B)= (E)=
(C)= (F)=

No.	Lev.	Parts No.	Description	Q'ty (A)	(B)	(C)	(D)	(E)	(F)	I	R
136	2	129209-61930	NUT, CAP	1							
137	2	129209-61970	PLATE	1							
138	2	119653-77950	SOLENOID, STOP	1							
139	2	23414-120016	GASKET, 12X1.0	1							
140	2	26106-060102	BOLT, M6X 10 PLATED	2							
141	1	102100-67080	BOLT, ADJUSTING	1							
142	1	26756-060002	NUT, LOCK M6	1							

N:Old ←Yes/No→ New. Q:Old ←No/Yes→ New. R:Old ←Yes/Yes→ New. S:Old ←No/No→ New. W:Add. Z:Discontinued. F:Interchangeable by set. K:Q'ty Change

Copyright (C) YANMAR CO., LTD. All RightsReserved.

Fig.14. FUEL INJECTION VALVE

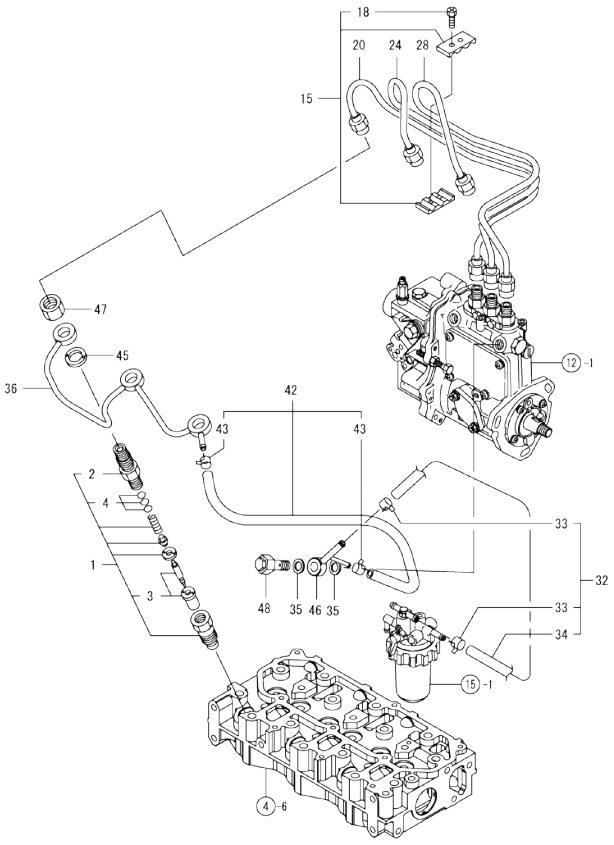

Remarks
(1)REPAIR PART.

(A)=3TNV76-KUSS (D)=
(B)= (E)=
(C)= (F)=

No.	Lev.	Parts No.	Description	Q'ty (A)	(B)	(C)	(D)	(E)	(F)	I	R
1	1	119717-53001	VALVE ASSY,INJECTION	3							
2	2	118200-53010	HOLDER, NOZZLE	3							
3	2	119717-53010	VALVE ASSY,INJECTION	3							
4	2	129901-53800	SHIM SET, ADJUSTING	3							1
15	1	129150-59120	RETAINER, PIPE	1							
18	2	129150-59131	BOLT, M4X14	2							
20	1	119717-59810	PIPE ASSY, INJECTION	1							
24	1	119717-59820	PIPE ASSY, INJECTION	1							
28	1	119717-59830	PIPE ASSY, INJECTION	1							
32	1	129210-59170	PIPE ASSY, FUEL	1							
33	2	124766-59050	CLIP, HOSE 12	2							
34	2	105225-59511	PIPE, FUEL	1							
35	1	22190-120002	WASHER, SEAL 12	2							
36	1	119717-59510	PIPE ASSY, RETURN	1							
42	1	119540-59570	PIPE ASSY, RETURN	1							
43	2	124066-59100	CLIP, HOSE 8	2							
45	1	129901-59560	GASKET	3							
46	1	119840-59570	JOINT	1							
47	1	119620-59700	NUT, NOZZLE	3							
48	1	119813-59950	VALVE ASSY, CHECK	1							

N:Old $\frac{\text{Yes}}{\text{No}}$ New. Q:Old $\frac{\text{No}}{\text{Yes}}$ New. R:Old $\frac{\text{Yes}}{\text{Yes}}$ New. S:Old $\frac{\text{No}}{\text{No}}$ New. W:Add. Z:Discontinued. F:Interchangeable by set. K:Q'ty Change

Copyright (C) YANMAR CO., LTD. All RightsReserved.

Fig.15. FUEL LINE

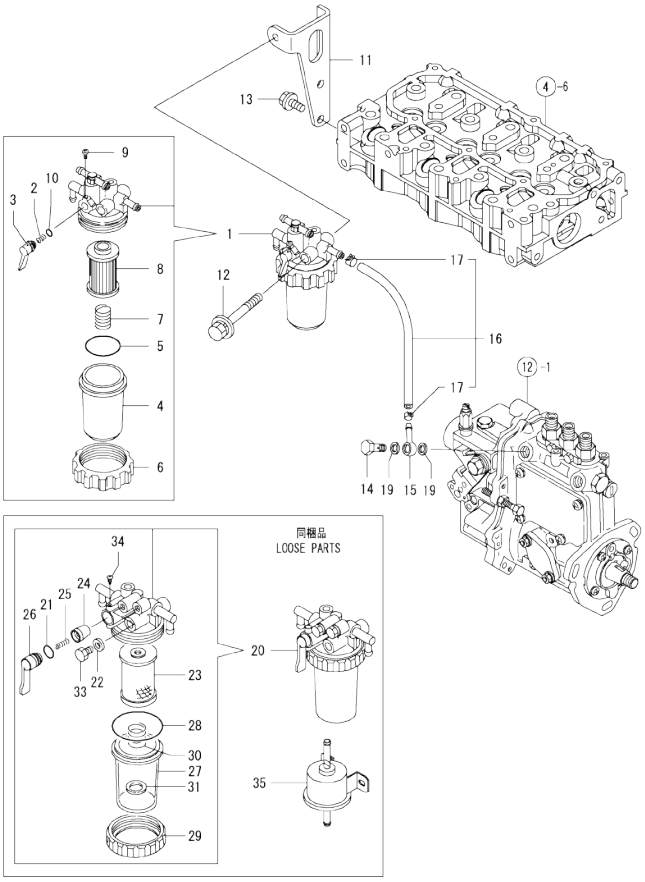

(A)=3TNV76-KUSS
(B)=
(C)=
(D)=
(E)=
(F)=

No.	Lev.	Parts No.	Description	Q'ty (A)	(B)	(C)	(D)	(E)	(F)	I	R
1	1	119833-55620	FILTER ASSY, FUEL	1							
2	2	104200-55330	SPRING, VALVE	1							
3	2	119810-55340	LEVER	1							
4	2	121254-55510	COVER	1							
5	2	102103-55520	O-RING	1							
6	2	110250-55610	RING, RETAINING	1							
7	2	121250-55620	SPRING	1							
8	2	119810-55650	ELEMENT	1							
9	2	104200-55750	SCREW, M4	1							
10	2	24311-240100	O-RING, 1AP10A	1							
11	1	119717-55650	BRACKET, FILTER	1							
12	1	26014-080702	BOLT, M8X 70	1							
13	1	26106-080162	BOLT, M8X 16 PLATED	2							
14	1	103854-39140	BOLT, PIPE JOINT	1							
15	1	101304-59020	JOINT, PIPE 12	1							
16	1	129210-59080	PIPE ASSY, FUEL	1							
17	2	124766-59050	CLIP, HOSE 12	2							
19	1	22190-120002	WASHER, SEAL 12	2							
20	1	129335-55700	SEPARATOR ASSY,WATER	1							
21	2	24311-240100	O-RING, 1AP10A	1							
22	2	23418-060000	GASKET, 6X1.0	2							
23	2	171081-55910	SCREEN	1							
24	2	104200-55321	VALVE, TAPER	1							
25	2	104200-55330	SPRING, VALVE	1							
26	2	104200-55341	HANDLE	1							
27	2	124064-55510	COVER	1							
28	2	102103-55520	O-RING	1							
29	2	110250-55610	RING, RETAINING	1							
30	2	121257-55720	SPRING	1							
31	2	121257-55731	FLOAT	1							
33	2	101720-55750	PLUG, 6	2							
34	2	104200-55750	SCREW, M4	1							
35	1	119225-52102	PUMP ASSY, FUEL FEED	1							

N:Old ◄Yes/No► New. Q:Old ◄No/Yes► New. R:Old ◄Yes/Yes► New. S:Old ◄No/No► New. W:Add. Z:Discontinued. F:Interchangeable by set. K:Q'ty Change

Copyright (C) YANMAR CO., LTD. All RightsReserved.

Fig.16. STARTING MOTOR

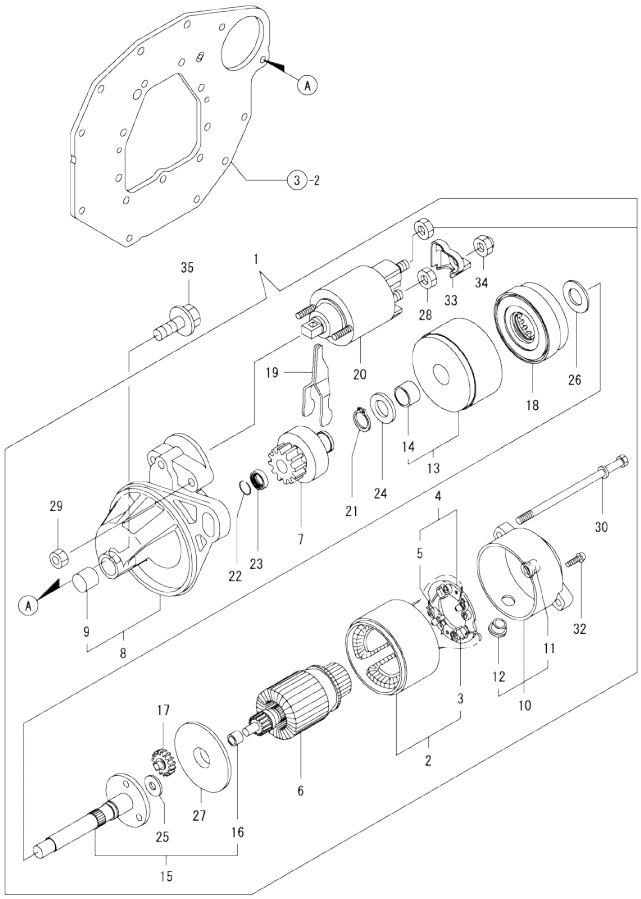

(A)=3TNV76-KUSS (D)=
(B)= (E)=
(C)= (F)=

No.	Lev.	Parts No.	Description	Q'ty (A)	(B)	(C)	(D)	(E)	(F)	I	R
1	1	119717-77010	STARTER, P1.1	1							
2	2	X0281007750	YOKE ASSY	1							
3	3	X0280996180	STARTER KIT	2							
4	2	X0285105190	HOLDER ASSY	1							
5	3	X0285205030	SPRING	4							
6	2	X0282005991	ARMATURE ASSY	1							
7	2	X0283006960	CLUTCH ASSY	1							
8	2	X4284001590	HOUSING ASSY	1							
9	3	X9491050100	BEARING, NEEDLE	1							
10	2	X0285007030	FRAME ASSY	1							
11	3	X9491040990	BEARING	1							
12	3	X0280626010	COVER	1							
13	2	X0284105040	BEARING ASSY	1							
14	3	X9491034330	BEARING	1							
15	2	X0286105010	SHAFT ASSY	1							
16	3	X9491034320	BEARING	1							
17	2	X0286305010	GEAR	3							
18	2	X0286355010	GEAR	1							
19	2	X0287405140	LEVER	1							
20	2	X0534007800	SWITCH ASSY	1							
21	2	X9055715000	RING	1							
22	2	X9490721360	RING	1							
23	2	X0280210331	NUT	1							
24	2	X9490138110	WASHER	1							
25	2	X9490138090	WASHER	1							
26	2	X9490138100	WASHER	1							
27	2	X0284525010	PLATE	1							
28	2	X9490562360	NUT	1							
29	2	X9490560750	NUT	2							
30	2	X9490423420	BOLT, THROUGH	2							
32	2	X9490065670	SCREW, M4X6	2							
33	2	X0280335350	COVER, TERMINAL	1							
34	2	X1289510130	NUT	1							
35	1	26106-100252	BOLT, M10X 25 PLATED	2							

N:Old ←Yes/No→ New. Q:Old ←No/Yes→ New. R:Old ←Yes/Yes→ New. S:Old ←No/No→ New. W:Add. Z:Discontinued. F:Interchangeable by set. K:Q'ty Change

Copyright (C) YANMAR CO., LTD. All RightsReserved.

Fig.17. GENERATOR

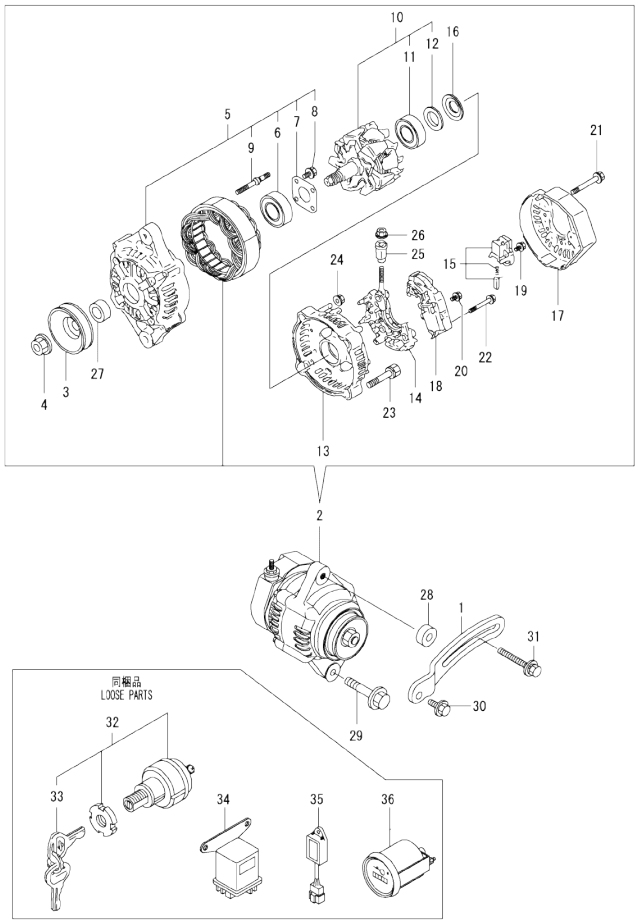

(A)=3TNV76-KUSS (D)=
(B)= (E)=
(C)= (F)=

No.	Lev.	Parts No.	Description	Q'ty (A)	(B)	(C)	(D)	(E)	(F)	I	R
1	1	119717-77340	ADJUSTER	1							
2	1	129457-77200	GENERATOR (12V-40A	1							
3	2	119620-77461	PULLEY	1							
4	2	119620-77471	NUT	1							
5	2	119620-77421	FRAME ASSY, DRIVE	1							
6	3	119620-79200	BEARING, BALL	1							
7	3	119620-79210	PLATE, RETAINER	1							
8	3	119620-79220	SCREW	4							
9	3	119620-79230	STUD	2							
10	2	119620-77380	ROTOR ASSY	1							
11	3	123501-79240	BEARING, BALL	1							
12	3	119620-79250	COVER	1							
13	2	119620-77440	FRAME ASSY	1							
14	2	119620-79260	HOLDER	1							
15	2	129052-79270	HOLDER, BRUSH	1							
16	2	119620-79360	WASHER, THRUST	1							
17	2	129240-79300	COVER	1							
18	2	129457-77710	REGULATOR ASSY	1							
19	2	119620-79290	SCREW	6							
20	2	119620-79300	SCREW	1							
21	2	119620-79310	BOLT	3							
22	2	119620-79320	SCREW	2							
23	2	119620-79330	BOLT	2							
24	2	119620-79350	NUT	2							
25	2	119620-79340	BUSH, INSULATION	1							
26	2	129240-79310	NUT	1							
27	2	119620-77490	COLLAR	1							
28	1	119940-77270	SPACER, GENERATOR	1							
29	1	26106-100502	BOLT, M10X 50 PLATED	1							
30	1	26106-080202	BOLT, M8X 20 PLATED	1							
31	1	129972-77341	BOLT, ADJUSTER L=50	1							
32	1	194215-52110	SWITCH, STARTING	1							
33	2	194155-52160	KEY ASSY	1							
34	1	119650-77910	RELAY ASSY, GLOW	1							
35	1	129155-77925	TIMER	1							
36	1	171014-91102	TACHOMETER	1							

N:Old ←Yes/No→ New. Q:Old ←No/Yes→ New. R:Old ←Yes/Yes→ New. S:Old ←No/No→ New. W:Add. Z:Discontinued. F:Interchangeable by set. K:Q'ty Change

Copyright (C) YANMAR CO., LTD. All RightsReserved.

Parts No. Index

Parts No.	Fig. No.	Ref. No.
101304-59020	15	15
101720-55750	15	33
102100-67080	13	141
102103-55520	15	5
		28
103854-39140	15	14
104200-55321	15	24
104200-55330	15	2
		25
104200-55341	15	26
104200-55750	15	9
		34
105010-11490	4	5
105225-59511	14	34
105311-01090	1	4
105425-01690	3	12
110250-55610	15	6
		29
114250-39450	9	11
118200-53010	14	2
118400-51370	12	48
119131-18320	6	6
119225-52102	15	35
119255-44660	11	11
119285-01990	1	6
119285-11990	4	13
119305-35151	9	4
119513-61550	13	94
119515-13200	6	8
119515-42350	10	17
119515-61440	13	24
119534-61420	13	22
119534-61430	13	23
119540-59570	14	42
119600-11460	4	4
119620-01620	3	5
119620-02020	1	7
119620-11280	4	29
119620-14200	7	1
119620-21500	8	7
119620-21941	8	13
119620-59700	14	47
119620-77380	17	10
119620-77421	17	5
119620-77440	17	13
119620-77461	17	3
119620-77471	17	4
119620-77490	17	27
119620-79200	17	6
119620-79210	17	7

Parts No.	Fig. No.	Ref. No.
119620-79220	17	8
119620-79230	17	9
119620-79250	17	12
119620-79260	17	14
119620-79290	17	19
119620-79300	17	20
119620-79310	17	21
119620-79320	17	22
119620-79330	17	23
119620-79340	17	25
119620-79350	17	24
119620-79360	17	16
119621-21681	8	12
119623-01250	1	5
119624-32040	2	18
119629-49080	11	15
119650-77910	17	34
119653-77950	13	138
119660-01651	3	7
119660-01911	2	17
119660-61901	13	68
119717-01330	1	27
119717-01501	2	1
119717-01570	2	2
119717-01620	3	2
119717-01720	3	10
119717-01750	2	16
119717-01770	3	11
119717-01800	2	6
119717-02411	1	10
119717-02930	1	23
119717-03031	4	39
119717-03070	4	40
		41
119717-11101	4	15
119717-11110	4	16
119717-11131	4	17
119717-11190	4	19
119717-11200	4	24
119717-11240	4	25
119717-11260	4	28
119717-11320	4	49
119717-11331	4	50
119717-11340	4	20
119717-11350	4	21
119717-11381	4	38
119717-11650	4	30
119717-11740	4	6
119717-11800	4	22
119717-13110	6	2

Parts No.	Fig. No.	Ref. No.
119717-13500	6	9
119717-13600	6	3
119717-14400	7	2
119717-14581	7	3
119717-21200	8	4
119717-21650	8	11
119717-21700	8	1
119717-22080	8	14
119717-22300	8	20
119717-22500	8	16
119717-22550	8	31
119717-22900	8	29
119717-23000	8	22
119717-23200	8	25
119717-23601	8	26
119717-23611	8	35
119717-23910	8	28
119717-25050	7	9
119717-25101	7	10
119717-25911	7	13
119717-25930	7	16
119717-32050	2	19
119717-32060	9	5
119717-32080	2	9
119717-32100	2	8
119717-32110	2	13
119717-32120	2	14
119717-34801	9	1
119717-35080	9	6
119717-39210	9	12
119717-42002	10	1
119717-42020	10	13
119717-42031	10	3
119717-42041	10	4
119717-42320	10	11
119717-49800	10	23
119717-51030	12	5
119717-51060	12	6
119717-51070	12	7
119717-51150	12	13
119717-51190	12	15
119717-51200	12	16
119717-51300	12	43
119717-51330	12	46
119717-51420	12	51
119717-51480	12	92
119717-51490	12	93
119717-51500	12	64
119717-51570	12	70
119717-51711	12	76

Parts No.	Fig. No.	Ref. No.
119717-51750	12	77
119717-51761	12	78
119717-51860	12	90
119717-53001	14	1
119717-53010	14	3
119717-55650	15	11
119717-59510	14	36
119717-59810	14	20
119717-59820	14	24
119717-59830	14	28
119717-61050	13	2
119717-61070	13	4
119717-61120	13	8
119717-61130	13	9
119717-61140	13	10
119717-61150	13	11
119717-61201	13	75
119717-61400	13	14
119717-77010	16	1
119717-77340	17	1
119717-77800	4	57
119717-77820	4	58
119718-11310	4	48
119734-01580	2	3
119734-01640	3	6
119734-02220	3	8
119740-13100	6	1
119740-51100	12	9
119744-01521	2	5
119751-61100	13	5
119761-21590	8	8
119761-61060	13	3
119761-61080	13	93
119761-61500	13	33
119761-61700	13	127
119802-03100	4	42
119802-03110	4	43
119802-03121	4	44
119802-03131	4	45
119802-03141	4	46
119802-13620	6	4
119802-32130	2	15
119802-44520	11	1
119802-44600	11	3
119808-12520	5	3
119808-12530	5	4
119808-12540	5	5
119810-01200	1	26
119810-02941	1	34
119810-55340	15	3

Parts No. Index

Parts No.	Fig. No.	Ref. No.
119810-55650	15	8
119813-59950	14	48
119833-55620	15	1
119840-59570	14	46
119865-21600	8	10
119865-42290	10	18
119940-77270	17	28
119C10-42320	10	11 -1
119E10-42000	10	1 -1
121250-44901	10	26
121250-55620	15	7
121254-55510	15	4
121257-55720	15	30
121257-55731	15	31
121450-42450	10	28
121450-44531	11	7
121468-44520	11	5
121470-44581	11	9
121520-34810	9	2
121550-49111	10	25
121850-51960	2	20
122710-51090	12	8
123501-79240	17	11
123900-13620	6	5
124060-01050	1	11
124064-55510	15	27
124066-59100	14	43
124101-49531	10	22
124160-01751	2	28
	4	37
124160-01910	1	12
124450-44560	11	8
124465-44950	10	27
		29
124550-51350	12	47
124756-67510	13	69
124766-59050	14	33
	15	17
129001-32320	2	11
129001-32330	2	12
129004-44520	11	1 -1
129004-44600	11	3 -1
129004-44610	11	3 A
129005-59830	9	13
129008-61301	13	79
129052-61390	13	13
129052-79270	17	15
129100-01580	3	1
	8	2
129100-35140	9	3

Parts No.	Fig. No.	Ref. No.
129100-51560	12	69
129100-51570	12	71
129100-52200	12	96
129100-61650	13	62
129107-44590	11	2
129150-11230	4	31
129150-11750	4	33
129150-25301	7	15
129150-49080	11	13
129150-49100	11	12
129150-59120	14	15
129150-59131	14	18
129150-91400	2	30
129155-51020	12	4
129155-51140	12	12
129155-51280	12	41
		42
	13	6
129155-51400	12	49
129155-51450	12	59
129155-51521	12	65
129155-51530	12	66
129155-51540	12	67
129155-51550	12	68
129155-51580	12	73
129155-51591	12	74
129155-51600	12	20
129155-51701	12	75
129155-52051	12	95
129155-61341	13	80
129155-61450	13	25
129155-61460	13	81
129155-61480	13	27
129155-77925	17	35
129156-61460	13	26
129209-61370	13	12
129209-61920	13	83
129209-61930	13	136
129209-61970	13	137
129210-59080	15	16
129210-59170	14	32
129240-79300	17	17
129240-79310	17	26
129255-52000	12	94
129255-61410	13	21
129335-44740	10	19
129335-55700	15	20
129457-77200	17	2
129457-77710	17	18
129486-61540	13	52

Parts No.	Fig. No.	Ref. No.
129508-11180	4	18
129608-12501	5	1
129608-12511	5	2
129900-07900	4	1
129900-32130	2	10
129901-11450	4	3
129901-53800	14	4
129901-59560	14	45
129916-49740	10	12
129972-77341	17	31
158552-61700	13	63
158552-61710	13	67
158552-61900	13	82
158600-51170	12	14
158600-51270	12	40
158600-51410	12	50
158600-51420	12	52
158600-51442	12	53
158600-51570	12	72
158600-51790	12	79
158601-61700	13	128
171014-91102	17	36
171081-55910	15	23
174307-51700	13	34
194155-52160	17	33
194215-52110	17	32
22190-080002	9	14
		16
22190-100002	13	84
22190-120002	13	85
	14	35
	15	19
22190-160002	3	14
	12	80
22217-120000	12	82
22242-000120	4	34
22252-000220	8	21
22272-000030	13	70
22272-000070	13	71
22351-050010	12	83
22351-060012	4	23
22372-040000	13	86
22512-040120	8	5
22857-500100	4	51
		52
22857-500160	4	53
23065-070130	11	10
23414-080000	10	14
23414-120016	13	139
23418-060000	15	22

Parts No.	Fig. No.	Ref. No.
23857-030000	9	15
23876-005000	4	14
23876-030000	2	7
23887-100002	13	87
24101-060034	12	84
24101-063034	12	85
24311-000320	2	29
	4	54
24311-240100	15	10
		21
24316-000150	12	86
24341-000070	13	72
24341-000240	2	32
26014-060122	11	4
26014-080702	15	12
26022-050122	12	87
26022-060162	12	88
26106-050102	12	89
26106-060102	9	10
	13	73
		74
		88
		140
26106-060122	2	21
	7	8
	10	21
26106-060142	13	89
26106-060162	2	22
		33
26106-060202	4	55
	13	90
26106-060222	3	9
26106-060352	7	14
26106-060402	2	23
		24
26106-060452	13	91
26106-060602	2	25
26106-060652	2	26
26106-060752	4	56
26106-080122	3	15
	10	15
26106-080162	4	2
	15	13
26106-080202	17	30
26106-080252	10	24
26106-080302	3	16
26106-080402	4	36
26106-080452	3	17
26106-080502	3	18
	10	16

Parts No. Index

Parts No.	Fig. No.	Ref. No.
26106-080602	10	20
26106-100252	16	35
26106-100502	17	29
26116-100202	3	3
26206-100252	3	4
26306-080002	2	27
	6	7
26577-060122	10	9
26716-120002	12	91
26756-060002	13	92
		142
26979-050162	4	35
27241-120000	1	13
27241-250000	10	10
719717-01561	1	1
719717-02901	1	28
719717-02911	1	31
719734-01510	2	4
719761-51390	12	1
X0280210331	16	23
X0280335350	16	33
X0280626010	16	12
X0280996180	16	3
X0281007750	16	2
X0282005991	16	6
X0283006960	16	7
X0284105040	16	13
X0284525010	16	27
X0285007030	16	10
X0285105190	16	4
X0285205030	16	5
X0286105010	16	15
X0286305010	16	17
X0286355010	16	18
X0287405140	16	19
X0534007800	16	20
X1289510130	16	34
X4284001590	16	8
X9055715000	16	21
X9490065670	16	32
X9490138090	16	25
X9490138100	16	26
X9490138110	16	24
X9490423420	16	30
X9490560750	16	29
X9490562360	16	28
X9490721360	16	22
X9491034320	16	16
X9491034330	16	14
X9491040990	16	11

Parts No.	Fig. No.	Ref. No.
X9491050100	16	9

Parts No.	Fig. No.	Ref. No.

Parts No.	Fig. No.	Ref. No.