YANMAR

PARTS CATALOG

0CW10-M31900EN

Last update Jul., 2010

PREFACE

1. This parts catalog is the 1st edition of 3TNV76-MNK for Neuson Kramer.

Pub.No. : 000Y00W3190

Published : March, 2008

2. Model name

Engine model	Vehicle Products	Vehicle made by
3TNV76-MNK	Wheel Loader	Neuson Kramer

Directions for the Parts Catalog.

1.The parts stipulated in this Parts Catalog are not necessarily standard equipped parts.
2.Parts may change without prior notice.
3.The following is an example of the Parts Catalog format.

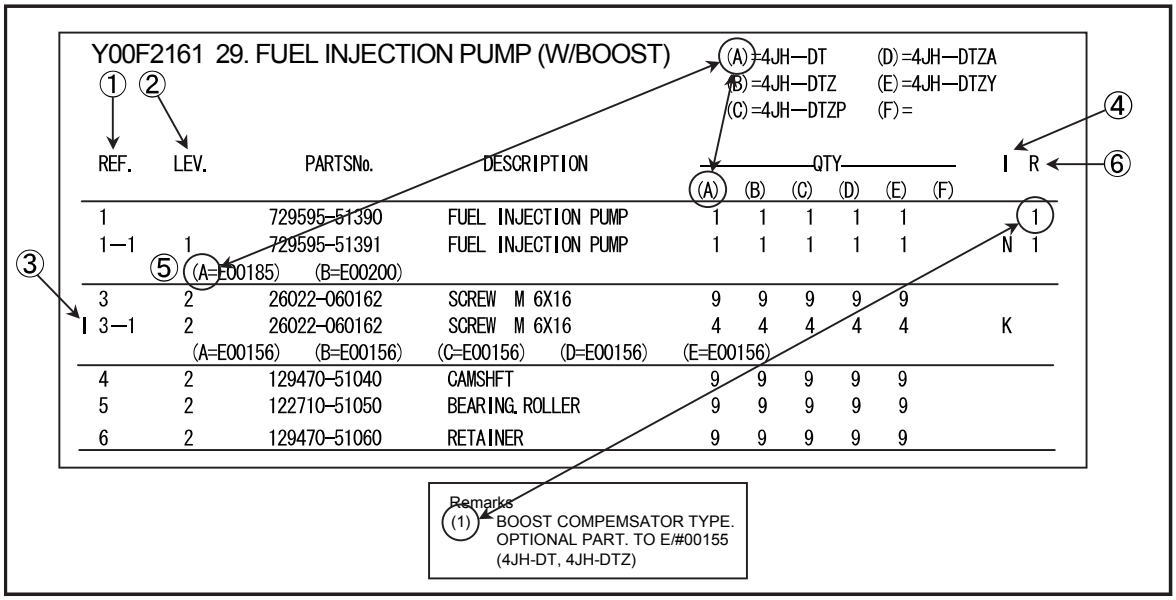

①Ref. No.

The Ref. No. listed may not be in accordance with the illustration Ref. No.

(Ex.) Illustration No. List Ref No.

1 1 (Before change) → 1- 1 (After change)

For interchangeable symbols N, R and K, illustrations for new parts may be abbreviated.

②Lev. (Level)

Level indication

The numbers below indicate the level of relativity towards the main part.

1 ----- Main parts (Assembly parts)
2 ----- Sub component included in " 1 ".
3 ----- Sub component included in " 2 ".

Note) Parts that are not for sale are partially illustrated but not listed.

③Change Mark

The "I" indicates parts that were newly changed.

④Interchangeability Mark

When a part change takes place, one of the following interchangeability symbols is indicated beside the part.

Symbol	Interchangeability	Contents note
N	Old ⇄ New	New Part is interchangeable for Old Part but Old Part is not interchangeable for New Part.
Q	Old ⇄ New	New Part is not interchangeable for Old Part but Old Part is interchangeable for New Part.
R	Old ⇄ New	New/ Old Parts are both interchangeable.
S	Old ⇄ New	New/ Old Parts are both not interchangeable.
W		Part newly added.
Z		Part discontinued.
F		Not interchangeable by a single part but interchangeable together with related parts.
K		Changes only for used parts quantities.

⑤Effective Machine No.

When a part changes, the effective Machine No. will be indicated in the (A)-(F) column.

Product Symbol	Product No.	Product Symbol	Product No.
C	Clutch No. Compressor No.	M	Machine No.
D	Drive No.	T	Tractor No.
E	Engine No.	Note 1)※	Date

Note 1) A date may follow the symbol. (Ex.) ※1996.01
Note 2) " XXX " are for parts that could not be predicted or for engine models that could not be identified.
Note 3) (A=E/#00185) is the E/# (Engine Serial Number) for the column (A) model (in this case 4JH-DT) after the parts design change.

⑥Remarks Mark

Figures or alphabets (symbols) are entered in the remarks column.
The comments (remarks) on parts that are indicated at the bottom of the illustration are the same symbols as those stated above.

Contents

Fig. No.	Fig. Name
3TNV76-MNK	
1.	CYLINDER BLOCK
2.	GEAR HOUSING
3.	FLYWHEEL HOUSING & OIL SUMP
4.	CYLINDER HEAD & BONNET
5.	EXHAUST MANIFOLD
6.	CAMSHAFT & DRIVING GEAR
7.	CRANKSHAFT & PISTON
8.	LUB.OIL SYSTEM
9.	COOLING WATER SYSTEM
10.	FUEL INJECTION PUMP
11.	GOVERNOR
12.	FUEL INJECTION VALVE
13.	FUEL FILTER
14.	STARTING MOTOR
15.	GENERATOR
16.	GASKET SET

Fig. No.	Fig. Name

0CW10-M31900

Fig.1. CYLINDER BLOCK

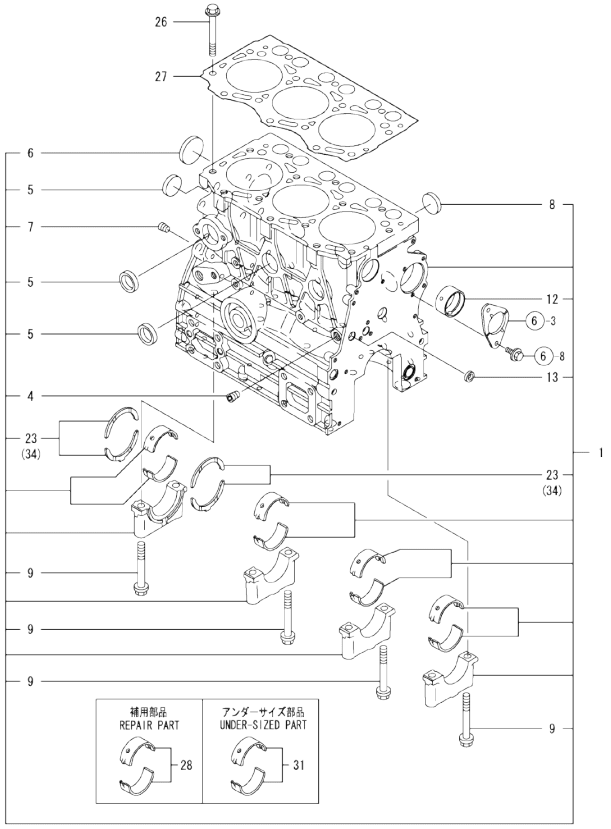

Remarks
(1) REPAIR PART.
(2) UNDER-SIZED(U.S=0.25)PART.
(3) OVER-SIZED(O.S=0.25)PART.

(A)=3TNV76-MNK (D)=
(B)= (E)=
(C)= (F)=

No.	Lev.	Parts No.	Description	Q'ty (A)	(B)	(C)	(D)	(E)	(F)	I	R
1	1	719717-01561	BLOCK ASSY, CYLINDER	1							
4	2	124060-01050	PLUG, PT1/8	1							
5	2	105311-01090	PLUG, 30	4							
6	2	119623-01250	PLUG, 45	1							
7	2	124160-01910	PLUG, PT1/4	1							
8	2	119285-01990	PLUG, 25	3							
9	2	119620-02020	BOLT, METAL CAP	8							
12	2	119717-02411	BUSH, CAMSHAFT	1							
13	2	27241-120000	PLUG, 12	1							
23	2	119717-02930	BEARING, THRUST	2							
26	1	119810-01200	BOLT, HEAD	14							
27	1	119717-01330	GASKET, HEAD	1							
28	1	719717-02901	BEARING, MAIN	4							1
31	1	719717-02911	BEARING, 0.25 US	4							2
34	1	119810-02941	BEARING, THRUST 0.25	2							3

N:Old ←Yes/No→ New. Q:Old ←No/Yes→ New. R:Old ←Yes/Yes→ New. S:Old ←No/No→ New. W:Add. Z:Discontinued. F:Interchangeable by set. K:Q'ty Change

Copyright (C) YANMAR CO., LTD. All RightsReserved.

0CW10-M31900

Fig.2. GEAR HOUSING

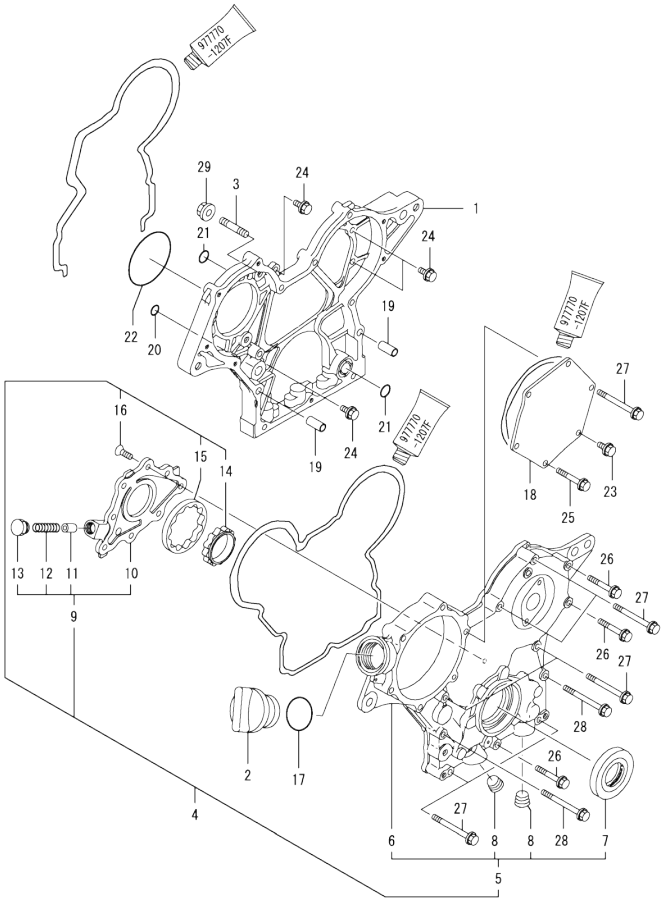

(A)=3TNV76-MNK (D)=
(B)= (E)=
(C)= (F)=

No.	Lev.	Parts No.	Description	Q'ty (A)	(B)	(C)	(D)	(E)	(F)	I	R
1	1	119717-01501	CASE, GEAR	1							
2	1	124160-01751	COVER, FILLER	1							
3	1	119717-01570	STUD	3							
4	1	119734-01590	COVER ASSY,GEAR CASE	1							
5	2	719734-01500	COVER ASSY,GEAR CASE	1							
6	3	119717-01521	COVER, GEAR CASE	1							
7	3	119717-01800	SEAL, OIL	1							
8	3	23876-030000	PLUG, R03	2							
9	2	119717-32100	COVER ASSY	1							
10	3	119717-32080	COVER	1							
11	3	129900-32130	VALVE, RELIEF	1							
12	3	129001-32320	SPRING	1							
13	3	129001-32330	PLUG	1							
14	2	119717-32110	ROTOR, INNER	1							
15	2	119717-32120	ROTOR, OUTER	1							
16	2	119802-32130	SCREW, M6X16	8							
17	1	24311-000320	O-RING, 1AP32.0	1							
18	1	119717-01750	COVER	1							
19	1	119660-01911	PIPE, KNOCK	4							
20	1	119624-32040	O-RING, P12.0	1							
21	1	119717-32050	O-RING, P17.0	3							
22	1	121850-51960	O-RING	1							
23	1	26106-060122	BOLT, M6X 12 PLATED	1							
24	1	26106-060162	BOLT, M6X 16 PLATED	4							
25	1	26106-060402	BOLT, M6X 40 PLATED	4							
26	1	26106-060402	BOLT, M6X 40 PLATED	3							
27	1	26106-060602	BOLT, M6X 60 PLATED	7							
28	1	26106-060652	BOLT, M6X 65 PLATED	2							
29	1	26306-080002	NUT, M8	3							

N:Old ◄Yes/No► New. Q:Old ◄No/Yes► New, R:Old ◄Yes/Yes► New, S:Old ◄No/No► New, W:Add, Z:Discontinued, F:Interchangeable by set, K:Q'ty Change

Copyright (C) YANMAR CO., LTD. All RightsReserved.

0CW10-M31900

Fig.3. FLYWHEEL HOUSING & OIL SUMP

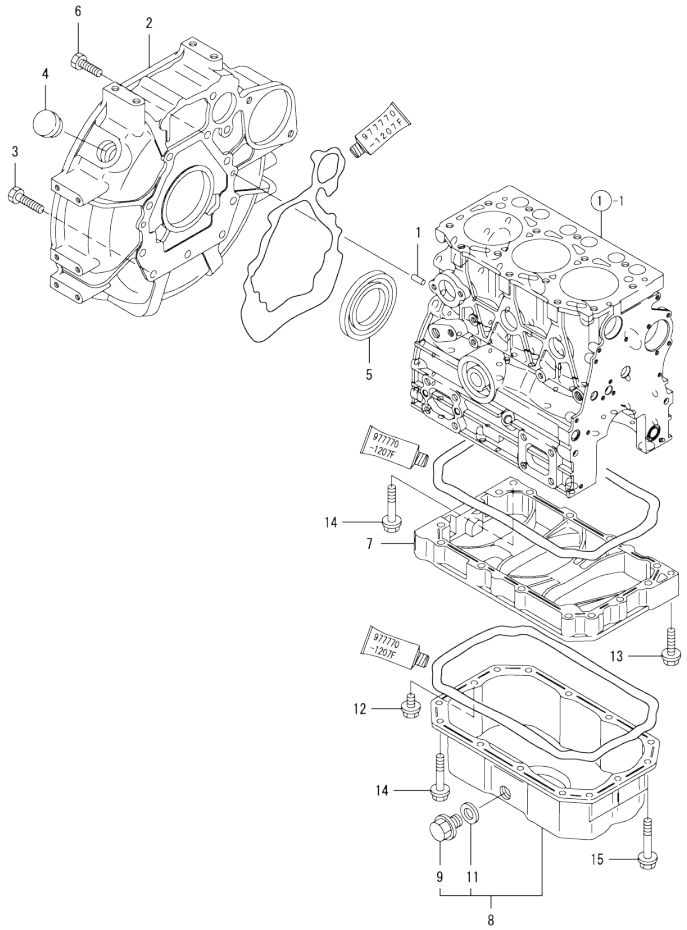

(A)=3TNV76-MNK (D)=
(B)= (E)=
(C)= (F)=

No.	Lev.	Parts No.	Description	Q'ty (A)	(B)	(C)	(D)	(E)	(F)	I	R
1	1	129100-01580	PIN, M8X16	2							
2	1	119717-01601	HOUSING, FLYWHEEL	1							
3	1	121120-01620	BOLT, M10X28	3							
4	1	119620-01750	CAP	1							
5	1	124085-02220	SEAL, OIL	1							
6	1	26206-100252	BOLT, M10X 25 PLATED	8							
7	1	119717-01720	SPACER, OIL SUMP	1							
8	1	119717-01770	SUMP ASSY, OIL	1							
9	2	105425-01690	PLUG, 16	1							
11	2	22190-160002	WASHER, SEAL 16	1							
12	1	26106-080122	BOLT, M8X 12 PLATED	1							
13	1	26106-080302	BOLT, M8X 30 PLATED	1							
14	1	26106-080452	BOLT, M8X 45 PLATED	11							
15	1	26106-080502	BOLT, M8X 50 PLATED	3							

N:Old ◄Yes/No► New. Q:Old ◄No/Yes► New, R:Old ◄Yes/Yes► New, S:Old ◄No/No► New, W:Add, Z:Discontinued. F:Interchangeable by set, K:Q'ty Change

Copyright (C) YANMAR CO., LTD. All RightsReserved.

0CW10-M31900

Fig.4. CYLINDER HEAD & BONNET

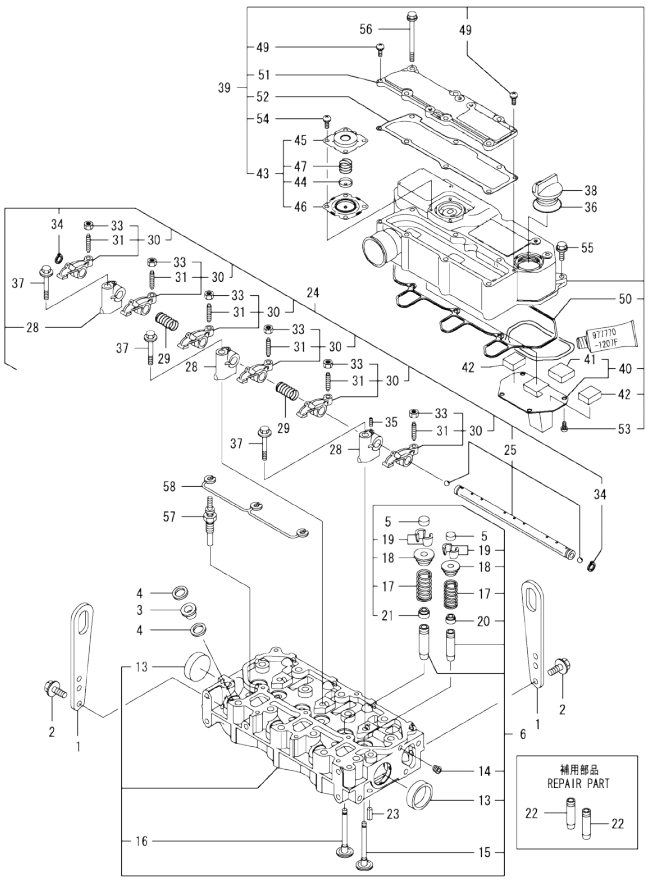

(A)=3TNV76-MNK (D)=
(B)= (E)=
(C)= (F)=

No.	Lev.	Parts No.	Description	Q'ty (A)	(B)	(C)	(D)	(E)	(F)	I	R
1	1	129900-07900	LIFTER	2							
2	1	26106-080162	BOLT, M8X 16 PLATED	4							
3	1	129901-11450	PROTECTOR, NOZZLE	3							
4	1	119600-11460	GASKET, NOZZLE	6							
5	1	105010-11490	CAP, VALVE	6							
6	1	119717-11740	HEAD ASSY, CYLINDER	1							
13	2	119285-11990	PLUG, 35	2							
14	2	23876-005000	PLUG, R005	1							
15	2	119717-11101	VALVE, INTAKE	3							
16	2	119717-11110	VALVE, EXHAUST	3							
17	2	119717-11131	SPRING, VALVE	6							
18	2	129508-11180	RETAINER, SPRING	6							
19	2	119717-11190	COTTER	12							
20	2	119717-11340	SEAL, VALVE STEM	3							
21	2	119717-11350	SEAL, VALVE STEM	3							
22	1	119717-11800	GUIDE, VALVE	6							1
23	1	22351-060012	PIN, SPRING 6.0X12	2							
24	1	119717-11200	SUPPORT ASSY, ARM	1							
25	2	119717-11240	SHAFT ASSY, ROCKER	1							
28	2	119717-11260	SUPPORT, ROCKER ARM	3							
29	2	119620-11280	SPRING	2							
30	2	119717-11650	ARM, ROCKER	6							
31	3	129150-11230	SCREW, VALVE ADJUST	6							
33	3	129150-11750	NUT, M8	6							
34	2	22242-000120	RING, 12	2							
35	2	26979-050162	SCREW, M5X16	1							
36	1	24311-000320	O-RING, 1AP32.0	1							
37	1	26106-080402	BOLT, M8X 40 PLATED	3							
38	1	124160-01751	COVER, FILLER	1							
39	1	119717-11381	BONNET ASSY, HEAD	1							
40	2	119717-03031	PLATE	1							
41	3	119717-03070	BAFFLE, BREATHER	1							
42	2	119717-03070	BAFFLE, BREATHER	2							
43	2	119802-03100	DIAPHRAGM ASSY	1							
44	3	119802-03110	PLATE	1							
45	3	119802-03121	COVER, DIAPHRAGM	1							
46	3	119802-03131	DIAPHRAGM	1							
47	3	119802-03141	SPRING, DIAPHRAGM	1							
49	2	22857-500160	SCREW, 5X16	2							
50	2	119718-11310	GASKET, BONNET	1							
51	2	119717-11320	COVER, BONNET	1							
52	2	119717-11331	GASKET	1							
53	2	22857-500100	SCREW, 5X10	4							
54	2	22857-500100	SCREW, 5X10	4							
55	1	26106-060202	BOLT, M6X 20 PLATED	3							
56	1	26106-060752	BOLT, M6X 75 PLATED	6							
57	1	119717-77800	PLUG, GLOW	3							
58	1	119717-77820	CONNECTOR, GLOW PLUG	1							

Remarks
(1) REPAIR PART.

N:Old ←Yes/No→ New. Q:Old ←No/Yes→ New. R:Old ←Yes/Yes→ New. S:Old ←No/No→ New. W:Add. Z:Discontinued. F:Interchangeable by set. K:Q'ty Change

Copyright (C) YANMAR CO., LTD. All RightsReserved.

0CW10-M31900

Fig.5. EXHAUST MANIFOLD

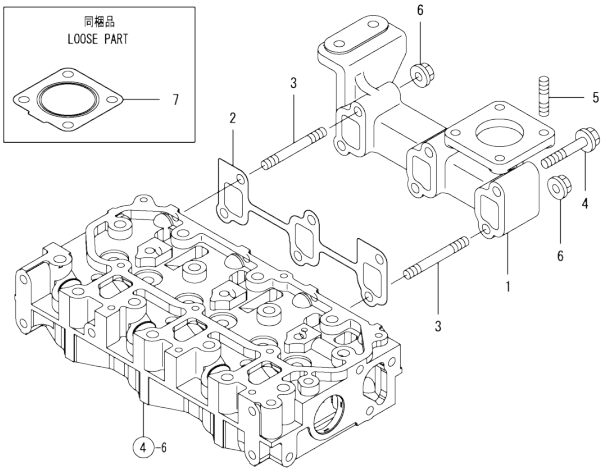

(A)=3TNV76-MNK (D)=
(B)= (E)=
(C)= (F)=

No.	Lev.	Parts No.	Description	Q'ty (A)	(B)	(C)	(D)	(E)	(F)	I	R
1	1	119717-13109	MANIFOLD, EXHAUST	1							
2	1	119717-13110	GASKET	1							
3	1	119717-13600	STUD, M8X50	2							
4	1	119802-13620	BOLT, M8X50	4							
5	1	119131-18320	STUD, M8X22	4							
6	1	26306-080002	NUT, M8	2							
7	1	119515-13200	GASKET, SILENCER	1							

N:Old ←Yes/No→ New. Q:Old ←No/Yes→ New. R:Old ←Yes/Yes→ New. S:Old ←No/No→ New. W:Add. Z:Discontinued. F:Interchangeable by set. K:Q'ty Change

Copyright (C) YANMAR CO., LTD. All RightsReserved.

0CW10-M31900

Fig.6. CAMSHAFT & DRIVING GEAR

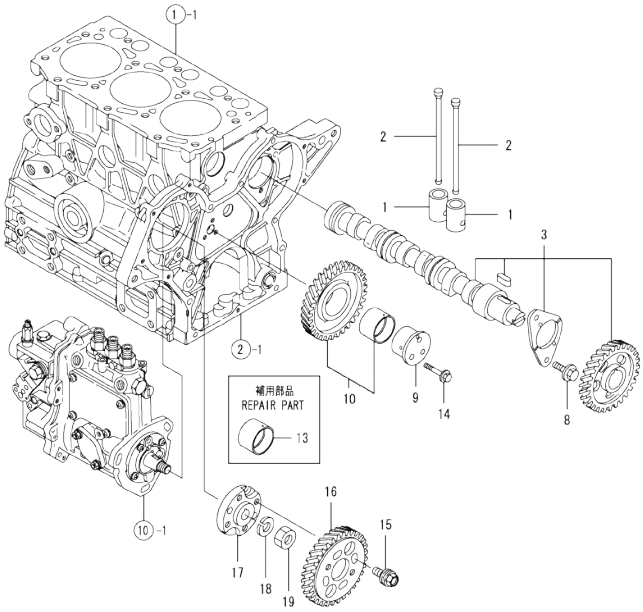

(A)=3TNV76-MNK (D)=
(B)= (E)=
(C)= (F)=

No.	Lev.	Parts No.	Description	Q'ty (A)	(B)	(C)	(D)	(E)	(F)	I	R
1	1	119620-14200	TAPPET	6							
2	1	119717-14400	ROD, PUSH	6							
3	1	119717-14581	CAMSHAFT ASSY	1							
8	1	26106-060122	BOLT, M6X 12 PLATED	2							
9	1	119717-25050	SHAFT, IDLE	1							
10	1	119717-25101	GEAR ASSY, IDLE	1							
13	1	119717-25911	BUSH, IDLE GEAR	1							1
14	1	26106-060352	BOLT, M6X 35 PLATED	3							
15	1	129150-25301	BOLT	4							
16	1	119717-25930	GEAR, PUMP	1							
17	1	119717-51150	FLANGE	1							
18	1	22217-120000	WASHER, SPRING 12	1							
19	1	26716-120002	NUT, M12	1							

Remarks
(1) REPAIR PART.

N:Old ←Yes/No→ New. Q:Old ←No/Yes→ New. R:Old ←Yes/Yes→ New. S:Old ←No/No→ New. W:Add. Z:Discontinued. F:Interchangeable by set. K:Q'ty Change

Copyright (C) YANMAR CO., LTD. All RightsReserved.

0CW10-M31900

Fig.7. CRANKSHAFT & PISTON

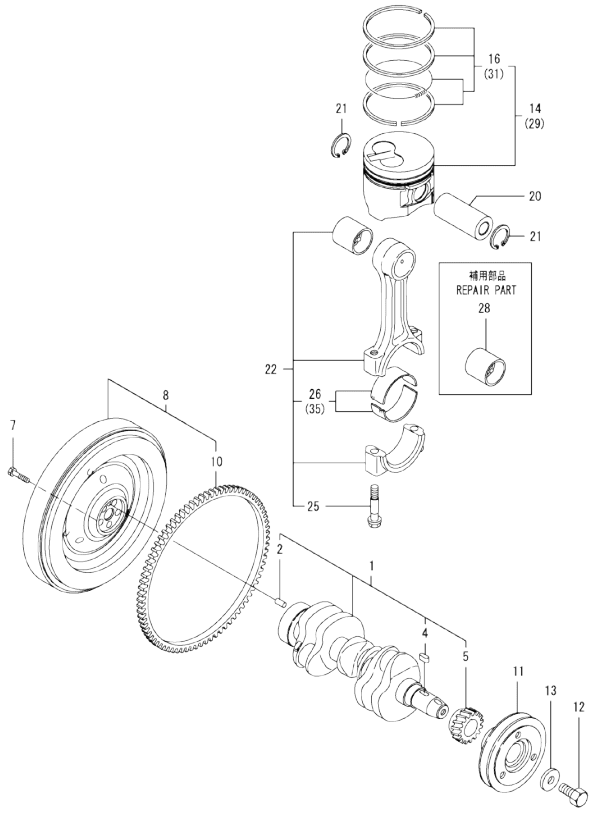

(A)=3TNV76-MNK (D)=
(B)= (E)=
(C)= (F)=

No.	Lev.	Parts No.	Description	Q'ty (A)	(B)	(C)	(D)	(E)	(F)	I	R
1	1	119717-21700	CRANKSHAFT ASSY	1							
2	2	129100-01580	PIN, M8X16	1							
4	2	22512-040120	KEY, 4X 12	1							
5	2	119717-21200	GEAR, CRANKSHAFT	1							
7	1	121111-21501	BOLT, FLYWHEEL	5							
8	1	119636-21580	FLYWHEEL ASSY	1							
10	2	119865-21600	GEAR, RING	1							
11	1	119717-21650	V-PULLEY	1							
12	1	119621-21680	BOLT, FLANGE 12X1.25	1							
13	1	119620-21941	WASHER	1							
14	1	119717-22080	PISTON ASSY	3							
16	2	119717-22500	RING SET, PISTON	3							
20	1	119717-22300	PIN, PISTON	3							
21	1	22252-000220	RING, 22	6							
22	1	119717-23000	ROD ASSY, CONNECTING	3							
25	2	119717-23200	BOLT, CONNECTING ROD	6							
26	2	119717-23601	BEARING, CRANK PIN	3							
28	1	119717-23910	BEARING, PISTON PIN	3							1
29	1	119717-22900	PISTON ASSY, 0.25 OS	3							3
31	2	119717-22550	RING SET, 0.25 OS	3							3
35	1	119717-23611	METAL ASSY, 0.25	3							2

Remarks
(1) REPAIR PART.
(2) UNDER-SIZED(U.S=0.25)PART.
(3) OVER-SIZED(O.S=0.25)PART.

N:Old $\frac{\text{Yes}}{\text{No}}$ New. Q:Old $\frac{\text{No}}{\text{Yes}}$ New. R:Old $\frac{\text{Yes}}{\text{Yes}}$ New. S:Old $\frac{\text{No}}{\text{No}}$ New. W:Add. Z:Discontinued. F:Interchangeable by set. K:Q'ty Change

Copyright (C) YANMAR CO., LTD. All RightsReserved.

0CW10-M31900

Fig.8. LUB.OIL SYSTEM

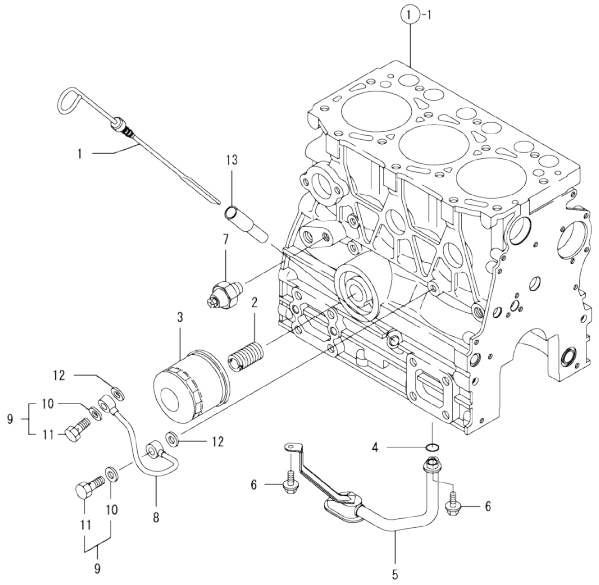

(A)=3TNV76-MNK (D)=
(B)= (E)=
(C)= (F)=

No.	Lev.	Parts No.	Description	Q'ty (A)	(B)	(C)	(D)	(E)	(F)	I	R
1	1	119717-34801	DIPSTICK, OIL	1							
2	1	129100-35140	STUD	1							
3	1	119305-35151	FILTER ASSY, D68XL65	1							1
4	1	119717-32060	O-RING, P15.0	1							
5	1	119717-35080	PIPE ASSY, OIL INLET	1							
6	1	26106-060102	BOLT, M6X 10 PLATED	2							
7	1	121252-39450	SWITCH, 0.5KG	1							
8	1	119717-39210	PIPE, OIL	1							
9	1	129005-59830	BOLT ASSY, JOINT M8	2							
10	2	22190-080002	WASHER, SEAL 6	2							
11	2	23857-030000	BOLT, JOINT 3	2							
12	1	22190-080002	WASHER, SEAL 6	2							
13	1	121520-34810	GUIDE, DIPSTICK	1							

Remarks
(1) REPAIR PART.

N:Old ←Yes/No→ New. Q:Old ←No/Yes→ New, R:Old ←Yes/Yes→ New, S:Old ←No/No→ New, W:Add, Z:Discontinued, F:Interchangeable by set, K:Q'ty Change

Copyright (C) YANMAR CO., LTD. All RightsReserved.

0CW10-M31900

Fig.9. COOLING WATER SYSTEM

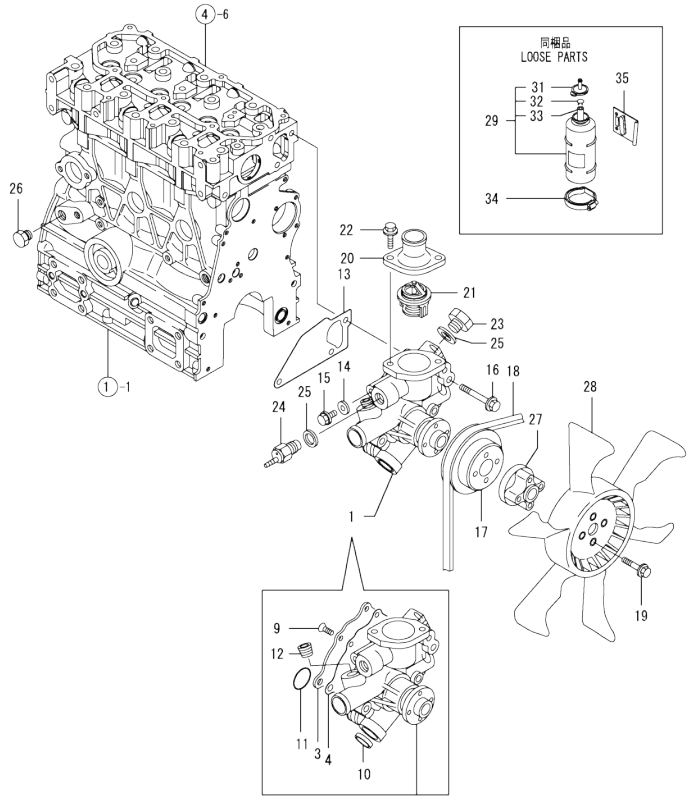

(A)=3TNV76-MNK (D)=
(B)= (E)=
(C)= (F)=

No.	Lev.	Parts No.	Description	Q'ty (A)	(B)	(C)	(D)	(E)	(F)	I	R
1	1	119717-42002	PUMP ASSY, WATER	1							
3	2	119717-42041	COVER	1							
4	2	119717-42031	GASKET	1							
9	2	26577-060122	SCREW, M6X12	4							
10	2	27241-250000	PLUG, 25	1							
11	2	119717-42320	O-RING, P26	1							
12	2	129916-49740	PLUG, R03	1							
13	1	119717-42020	GASKET, WATER PUMP	1							
14	1	23414-080000	GASKET, 8X1.0	1							
15	1	26106-080122	BOLT, M8X 12 PLATED	1							
16	1	26106-080502	BOLT, M8X 50 PLATED	3							
17	1	119740-42350	V-PULLEY, D=90	1							
18	1	119740-42370	V-BELT, A35.5	1							
19	1	26106-060452	BOLT, M6X 45 PLATED	4							
20	1	129350-49530	COVER, THERMOSTAT	1							
21	1	119717-49800	THERMOSTAT, 71	1							
22	1	26106-080202	BOLT, M8X 20 PLATED	2							
23	1	121450-42450	PLUG, M16	1							
24	1	121250-44901	SWITCH, 110	1							
25	1	124465-44950	GASKET, 16	2							
26	1	171056-49120	PLUG, DRAIN	1							
27	1	129457-44760	SPACER, FAN	1							
28	1	171340-44740	FAN, COOLING D335XNF	1							
29	1	124450-44510	TANK ASSY, SUB	1							
31	2	124450-44530	CAP	1							
32	2	124450-44560	RETAINER	1							
33	2	23061-070230	PIPE, 7X 230	1							
34	1	124450-44550	BAND	1							
35	1	121256-44600	BRACKET, SUB TANK	1							

N:Old ←Yes/No→ New. Q:Old ←No/Yes→ New. R:Old ←Yes/Yes→ New. S:Old ←No/No→ New. W:Add. Z:Discontinued. F:Interchangeable by set. K:Q'ty Change

Copyright (C) YANMAR CO., LTD. All RightsReserved.

0CW10-M31900

Fig.10. FUEL INJECTION PUMP

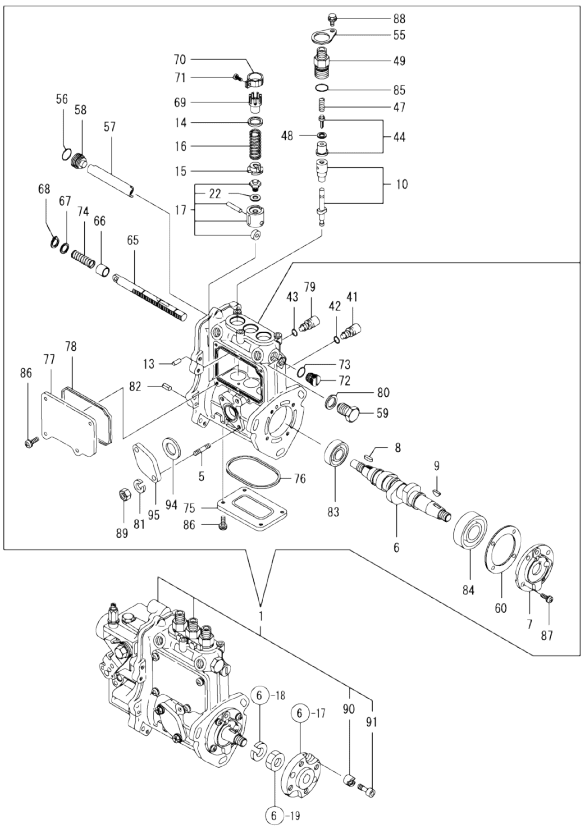

Remarks
(1) GOVERNOR ASSY(FIG.11) IS INCORPORATED IN THIS FUEL INJECTION PUMP.(REF.NO.1).

(A)=3TNV76-MNK (D)=
(B)= (E)=
(C)= (F)=

No.	Lev.	Parts No.	Description	Q'ty (A)	(B)	(C)	(D)	(E)	(F)	I	R
1	1	719744-51380	PUMP ASSY, INJECTION	1							1
5	2	129155-51020	STUD	2							
6	2	119717-51030	CAMSHAFT	1							
7	2	119717-51060	SUPPORT, CAMSHAFT	1							
8	2	119717-51070	KEY	1							
9	2	122710-51090	KEY	1							
10	2	119740-51100	PLUNGER ASSY	3							
13	2	129155-51140	PIN	3							
14	2	158600-51170	RETAINER, SPRING	3							
15	2	119717-51570	RETAINER, SPRING	3							
16	2	119717-51190	SPRING, PLUNGER	3							
17	2	119717-51200	TAPPET ASSY	3							
22	3	129155-51600	SHIM SET, ADJUSTING	3							
41	2	158600-51270	STOPPER, TAPPET	3							
42	2	129155-51280	O-RING, S6	3							
43	2	129155-51280	O-RING, S6	1							
44	2	119717-51300	VALVE ASSY, DELIVERY	3							
47	2	119717-51330	SPRING, DELIVERY	3							
48	2	124550-51350	GASKET, DELIVERY	3							
49	2	158600-51442	VALVE ASSY, DELIVERY	3							
55	2	118400-51370	LOCKING	3							
56	2	119717-51420	O-RING	1							
57	2	129155-51400	DEFLECTOR	1							
58	2	158600-51410	PLUG, DEFLECTOR	1							
59	2	158600-51420	PLUG, DEFLECTOR	1							
60	2	129155-51450	SHIM SET, ADJUSTING	1							
65	2	119717-51500	RACK, CONTROL	1							
66	2	129155-51521	BUSH, RACK	1							
67	2	129155-51530	SPACER	1							
68	2	129155-51540	CIRCLIP	1							
69	2	129155-51550	PINION, CONTROL	3							
70	2	129100-51560	PINION	3							
71	2	129100-51570	SCREW	3							
72	2	158600-51570	PLUG	1							
73	2	129155-51580	O-RING	1							
74	2	129155-51591	SPRING, RACK	1							
75	2	129155-51701	COVER	1							
76	2	119717-51711	GASKET	1							
77	2	119717-51750	COVER	1							
78	2	119717-51761	GASKET	1							
79	2	158600-51790	STOOPER, RACK	1							
80	2	22190-160002	WASHER, SEAL 16	1							
81	2	22217-060000	WASHER, SPRING 6	2							
82	2	22351-050010	PIN, SPRING 5.0X10	2							
83	2	24101-060034	BEARING, BALL 6003	1							
84	2	24101-063034	BEARING, BALL 6303	1							
85	2	24316-000150	O-RING, 4DP15.0	3							
86	2	26022-050122	SCREW, M5X12	8							
87	2	26022-060162	SCREW, M6X16	4							
88	2	26106-050102	BOLT, M5X 10 PLATED	3							
89	2	26716-060002	NUT, M6	2							

N:Old ←Yes/No→ New. Q:Old ←No/Yes→ New. R:Old ←Yes/Yes→ New. S:Old ←No/No→ New. W:Add. Z:Discontinued. F:Interchangeable by set. K:Q'ty Change

++ CONTINUE ++

Copyright (C) YANMAR CO., LTD. All RightsReserved.

0CW10-M31900

Fig.10. FUEL INJECTION PUMP

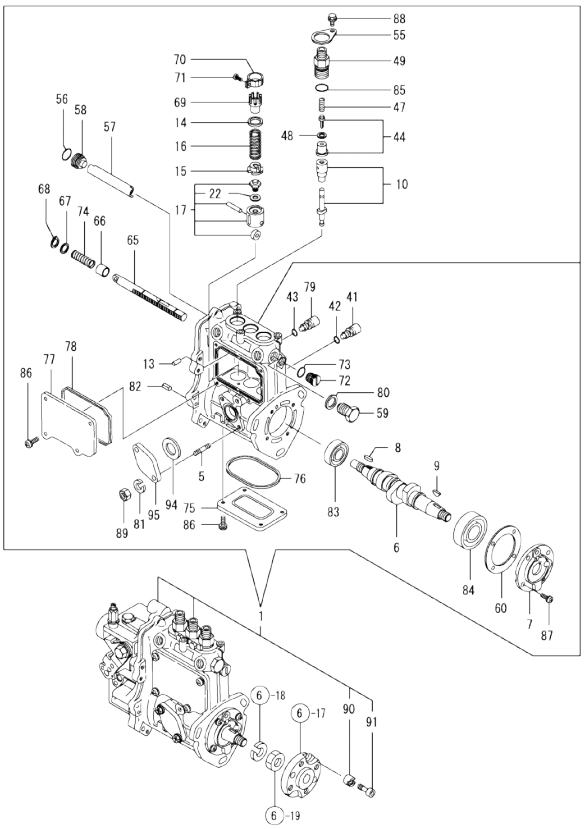

Remarks
(1) GOVERNOR ASSY(FIG.11) IS INCORPORATED IN THIS FUEL INJECTION PUMP.(REF.NO.1).

(A)=3TNV76-MNK (B)= (C)= (D)= (E)= (F)=

No.	Lev.	Parts No.	Description	Q'ty (A)	(B)	(C)	(D)	(E)	(F)	I	R
90	2	119717-51480	COLLAR	1							
91	2	119717-51490	BOLT	1							
94	2	129155-52051	GASKET	1							
95	2	129100-52200	COVER	1							

N:Old ←Yes/No→ New. Q:Old ←No/Yes→ New. R:Old ←Yes/Yes→ New. S:Old ←No/No→ New. W:Add. Z:Discontinued. F:Interchangeable by set. K:Q'ty Change

Copyright (C) YANMAR CO., LTD. All RightsReserved.

0CW10-M31900

Fig.11. GOVERNOR

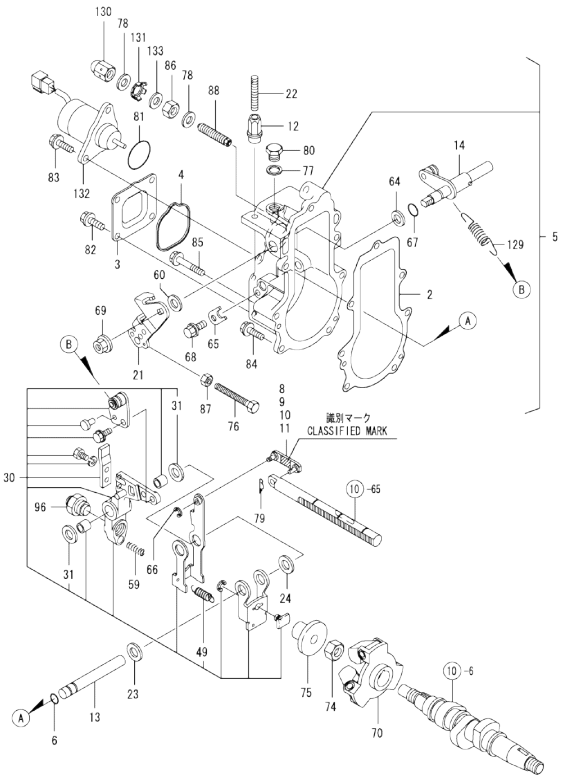

Remarks
* THIS FIGURE(GOVERNOR ASSY)IS INCORPORATED IN THE FUEL INJECTION PUMP ASSY(FIG.10).
(1) SELECTIVE PARTS;CERTAIN THE CLASSIFICATION MARK,THEN PLACE YOUR ORDER.(REF.TO.ILLUSTRATION).

(A)=3TNV76-MNK (B)= (C)= (D)= (E)= (F)=

No.	Lev.	Parts No.	Description	Q'ty (A)	(B)	(C)	(D)	(E)	(F)	I	R
2	2	119717-61050	GASKET	1							
3	2	119717-61060	COVER, GOVERNOR CASE	1							
4	2	119717-61070	GASKET	1							
5	2	119717-61100	CASE ASSY, GOVERNOR	1							
6	3	129155-51280	O-RING, S6	1							
8	3	119717-61120	LINK, MARK :3	1							1
9	3	119717-61130	LINK, MARK 98	1							1
10	3	119717-61140	LINK, MARK 88	1							1
11	3	119717-61150	LINK, MARK 03	1							1
12	3	129209-61370	NUT, M6	1							
13	3	129052-61390	SHAFT	1							
14	3	119717-61400	SHAFT ASSY	1							
21	3	119515-61440	LEVER, CONTROL	1							
22	3	129155-61450	BOLT, LIMITER	1							
23	3	129156-61460	SHIM, T=0.6	1							
24	3	129155-61480	SPACER ASSY	1							
30	3	119717-61500	LEVER ASSY, GOVERNOR	1							
31	4	174307-51700	SHIM SET	2							
49	4	129486-61540	SPRING, SET	1							
59	3	129100-61650	SPRING, CONTROLLER	1							
60	3	158552-61700	SHIM SET	1							
64	3	158552-61710	SHIM, T=1.0	1							
65	3	119660-61901	RETAINER, SHAFT	1							
66	3	22272-000030	RING, E- 3	1							
67	3	24341-000070	O-RING, 1AS7.0	1							
68	3	26106-060102	BOLT, M6X 10 PLATED	1							
69	3	26366-080002	NUT, M8	1							
70	2	119717-61200	WEIGHT ASSY,GOVERNOR	1							
74	2	129008-61301	NUT	1							
75	2	129155-61341	SLEEVE	1							
76	2	129155-61460	BOLT, IDLE	1							
77	2	22190-100002	WASHER, SEAL 10	1							
78	2	22190-120002	WASHER, SEAL 12	2							
79	2	22372-040000	PIN, SNAP 4	1							
80	2	23887-100002	PLUG, 10	1							
81	2	158552-61900	O-RING	1							
82	2	26106-060102	BOLT, M6X 10 PLATED	4							
83	2	26106-060142	BOLT, M6X 14 PLATED	2							
84	2	26106-060202	BOLT, M6X 20 PLATED	4							
85	2	26106-060452	BOLT, M6X 45 PLATED	3							
86	2	129209-61920	NUT, ARB	1							
87	2	26756-060002	NUT, LOCK M6	1							
88	2	158601-61710	LIMITER ASSY, FUEL	1							
96	2	119415-61550	ANGLEICH ASSY	1							
129	2	171353-61700	SPRING, GOVERNOR	1							
130	2	129209-61930	NUT, CAP	1							
131	2	129209-61970	PLATE	1							
132	2	119233-77932	SOLENOID, STOP	1							
133	2	23414-120016	GASKET, 12X1.0	1							

N:Old ←Yes/No→ New. Q:Old ←No/Yes→ New. R:Old ←Yes/Yes→ New. S:Old ←No/No→ New. W:Add. Z:Discontinued. F:Interchangeable by set. K:Q'ty Change

Copyright (C) YANMAR CO., LTD. All RightsReserved.

0CW10-M31900

Fig.12. FUEL INJECTION VALVE

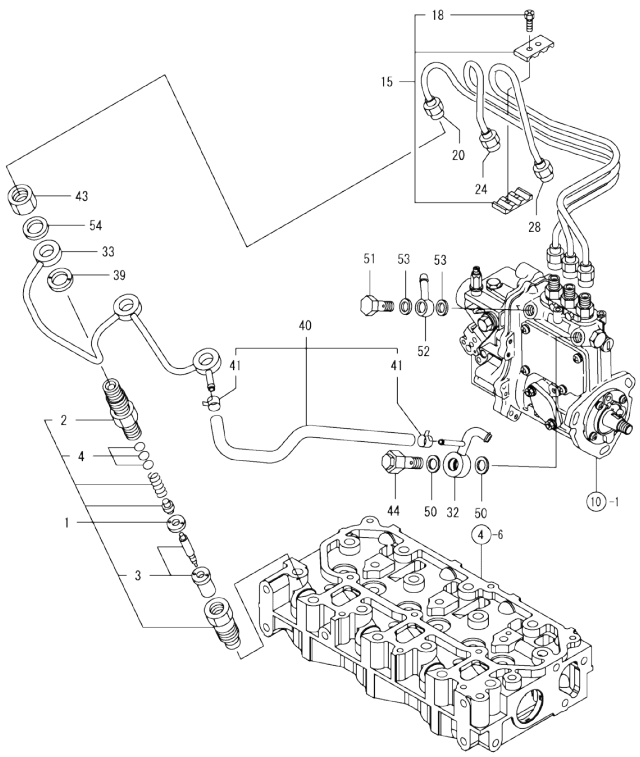

(A)=3TNV76-MNK (D)=
(B)= (E)=
(C)= (F)=

No.	Lev.	Parts No.	Description	Q'ty (A)	(B)	(C)	(D)	(E)	(F)	I	R
1	1	119717-53001	VALVE ASSY,INJECTION	3							
2	2	118200-53010	HOLDER, NOZZLE	3							
3	2	119717-53010	VALVE ASSY,INJECTION	3							
4	2	129901-53800	SHIM SET, ADJUSTING	3							1
15	1	129150-59120	RETAINER, PIPE	1							
18	2	129150-59131	BOLT, M4X14	2							
20	1	119717-59810	PIPE ASSY, INJECTION	1							
24	1	119717-59820	PIPE ASSY, INJECTION	1							
28	1	119717-59830	PIPE ASSY, INJECTION	1							
32	1	119515-59581	JOINT, OVER FLOW	1							
33	1	119717-59510	PIPE ASSY, RETURN	1							
39	1	129901-59560	GASKET	3							
40	1	119540-59570	PIPE ASSY, RETURN	1							
41	2	124066-59100	CLIP, HOSE 8	2							
43	1	119620-59700	NUT, NOZZLE	3							
44	1	119813-59950	VALVE ASSY, CHECK	1							
50	1	22190-120002	WASHER, SEAL 12	2							
51	1	103854-39140	BOLT, PIPE JOINT	1							
52	1	101304-59020	JOINT, PIPE 12	1							
53	1	22190-120002	WASHER, SEAL 12	2							
54	1	22190-120002	WASHER, SEAL 12	3							

Remarks
(1) REPAIR PART.

N:Old $\frac{\text{Yes}}{\text{No}}$ New. Q:Old $\frac{\text{No}}{\text{Yes}}$ New. R:Old $\frac{\text{Yes}}{\text{Yes}}$ New. S:Old $\frac{\text{No}}{\text{No}}$ New. W:Add. Z:Discontinued. F:Interchangeable by set. K:Q'ty Change

Copyright (C) YANMAR CO., LTD. All RightsReserved.

0CW10-M31900

Fig.13. FUEL FILTER

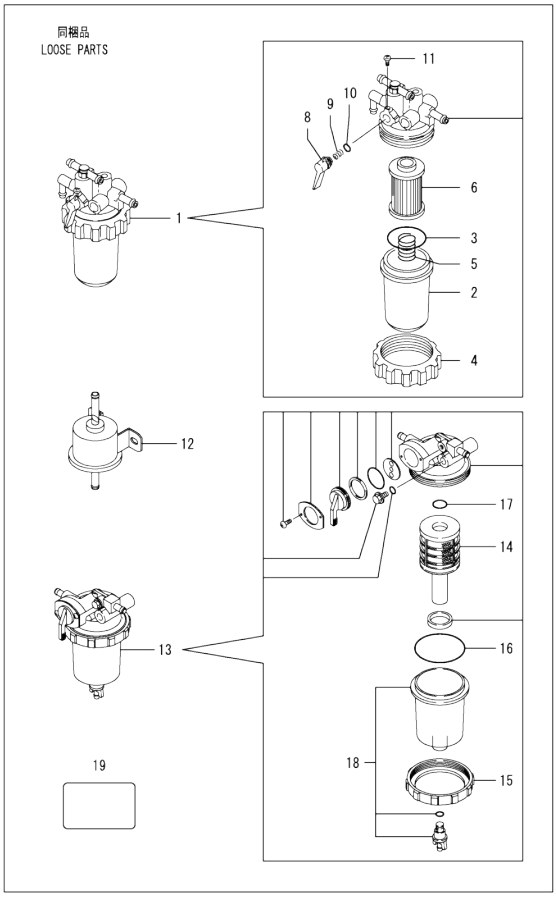

(A)=3TNV76-MNK (D)=
(B)= (E)=
(C)= (F)=

No.	Lev.	Parts No.	Description	Q'ty (A)	(B)	(C)	(D)	(E)	(F)	I	R
1	1	119740-55600	FILTER ASSY, FUEL	1							
2	2	121254-55510	COVER	1							
3	2	102103-55520	O-RING	1							
4	2	110250-55610	RING, RETAINING	1							
5	2	121250-55620	SPRING	1							
6	2	119810-55650	ELEMENT	1							
8	2	119810-55340	LEVER	1							
9	2	104200-55330	SPRING, VALVE	1							
10	2	24311-240100	O-RING, 1AP10A	1							
11	2	104200-55750	SCREW, M4	1							
12	1	119225-52102	PUMP ASSY, FUEL FEED	1							
13	1	119802-55700	SEPARATOR ASSY	1							
14	2	119802-55710	ELEMENT	1							
15	2	129100-55690	RING, RETAINING	1							
16	2	24321-000650	O-RING, 1AG65.0	1							
17	2	24311-000160	O-RING, 1AP16.0	1							
18	2	119802-55730	CUP ASSY	1							
19	1	114110-07760	LABEL, FUEL OIL NOTI	1							

N:Old ←Yes/No→ New. Q:Old ←No/Yes→ New. R:Old ←Yes/Yes→ New. S:Old ←No/No→ New. W:Add. Z:Discontinued. F:Interchangeable by set. K:Q'ty Change

Copyright (C) YANMAR CO., LTD. All RightsReserved.

0CW10-M31900

Fig.14. STARTING MOTOR

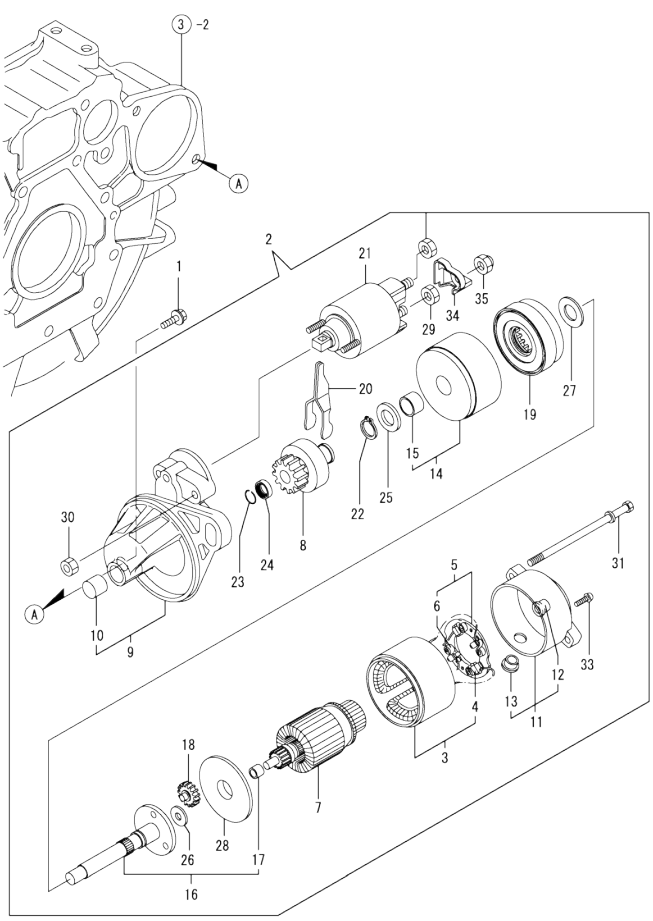

(A)=3TNV76-MNK (D)=
(B)= (E)=
(C)= (F)=

No.	Lev.	Parts No.	Description	Q'ty (A)	(B)	(C)	(D)	(E)	(F)	I	R
1	1	26106-100252	BOLT, M10X 25 PLATED	2							
2	1	119717-77010	STARTER, P1.1	1							
3	2	X0281007750	YOKE ASSY	1							
4	3	X0280996180	STARTER KIT	2							
5	2	X0285105190	HOLDER ASSY	1							
6	3	X0285205030	SPRING	4							
7	2	X0282005991	ARMATURE ASSY	1							
8	2	X0283006960	CLUTCH ASSY	1							
9	2	X4284001590	HOUSING ASSY,STARTER	1							
10	3	X9491050100	BEARING, NEEDLE	1							
11	2	X0285007030	FRAME ASSY.	1							
12	3	X9491040990	BEARING	1							
13	3	X0280626010	COVER	1							
14	2	X0284105040	BEARING ASSY	1							
15	3	X9491034330	BEARING	1							
16	2	X0286105010	SHAFT ASSY	1							
17	3	X9491034320	BEARING	1							
18	2	X0286305010	GEAR	3							
19	2	X0286355010	GEAR	1							
20	2	X0287405140	LEVER	1							
21	2	X0534007800	SWITCH ASSY	1							
22	2	X9055715000	RING	1							
23	2	X9490721360	RING	1							
24	2	X0280210331	NUT	1							
25	2	X9490138110	WASHER	1							
26	2	X9490138090	WASHER	1							
27	2	X9490138100	WASHER	1							
28	2	X0284525010	PLATE	1							
29	2	X9490562360	NUT	1							
30	2	X9490560750	NUT	2							
31	2	X9490423420	BOLT, THROUGH	2							
33	2	X9490065670	SCREW, M4X6	2							
34	2	X0280335350	COVER, TERMINAL	1							
35	2	X1289510130	NUT	1							

N:Old ←Yes/No→ New. Q:Old ←No/Yes→ New. R:Old ←Yes/Yes→ New. S:Old ←No/No→ New. W:Add. Z:Discontinued. F:Interchangeable by set. K:Q'ty Change

Copyright (C) YANMAR CO., LTD. All RightsReserved.

0CW10-M31900

Fig.15. GENERATOR

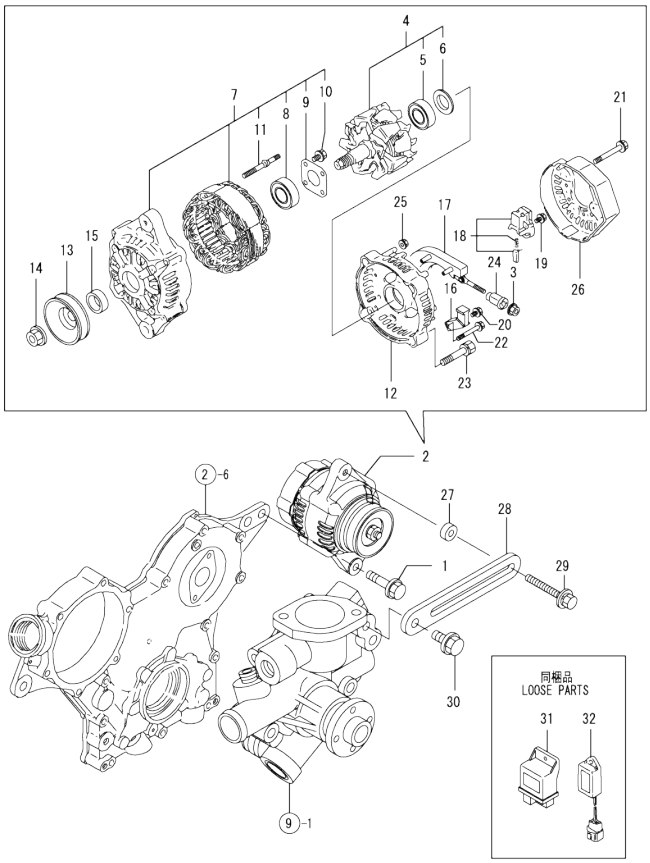

(A)=3TNV76-MNK (D)=
(B)= (E)=
(C)= (F)=

No.	Lev.	Parts No.	Description	Q'ty (A)	(B)	(C)	(D)	(E)	(F)	I	R
1	1	26106-100502	BOLT, M10X 50 PLATED	1							
2	1	119626-77210	ALTERNATOR, 12V-55A	1							
3	2	X9490561001	NUT	1							
4	2	129052-77380	ROTOR ASSY	1							
5	3	125301-79240	BALL BEARING	1							
6	3	119620-79250	COVER, BEARING	1							
7	2	129052-77422	FRAME ASSY	1							
8	3	119620-79200	BALL BEARING	1							
9	3	119620-79210	PLATE	1							
10	3	119620-79220	SCREW	4							
11	3	119620-79230	BOLT, STUD	2							
12	2	128401-77440	FRAME	1							
13	2	119620-77461	PULLEY	1							
14	2	119620-77471	NUT	1							
15	2	119620-77490	COLLAR	1							
16	2	119626-77710	REGULATOR ASSY	1							
17	2	129052-79260	HOLDER	1							
18	2	129052-79270	HOLDER, BRUSH	1							
19	2	119620-79290	SCREW	6							
20	2	119620-79300	SCREW	1							
21	2	119620-79310	BOLT	3							
22	2	119620-79320	SCREW W/WASHER	2							
23	2	119620-79330	BOLT	2							
24	2	119620-79340	INSULATION BUSH	1							
25	2	119620-79350	NUT	2							
26	2	119626-77450	COVER, END, RR	1							
27	1	119940-77270	SPACER, GENERATOR	1							
28	1	119717-77340	ADJUSTER	1							
29	1	129972-77341	BOLT, ADJUSTER L=50	1							
30	1	26106-080202	BOLT, M8X 20 PLATED	1							
31	1	119802-77200	RELAY, SAFETY	1							
32	1	129211-77920	TIMER	1							

N:Old ←Yes/No→ New. Q:Old ←No/Yes→ New. R:Old ←Yes/Yes→ New. S:Old ←No/No→ New. W:Add. Z:Discontinued. F:Interchangeable by set. K:Q'ty Change

Copyright (C) YANMAR CO., LTD. All RightsReserved.

0CW10-M31900

Fig.16. GASKET SET

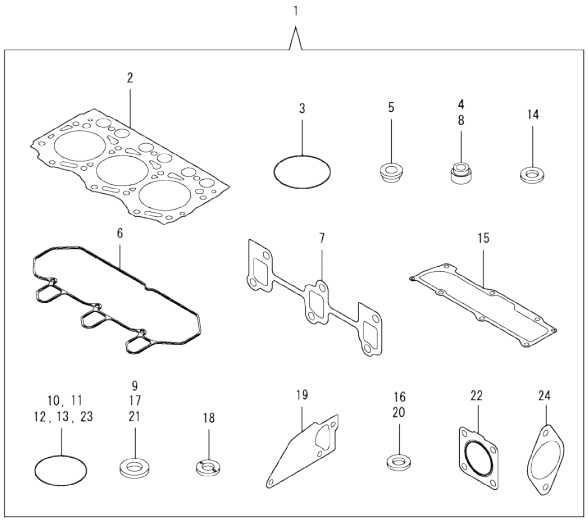

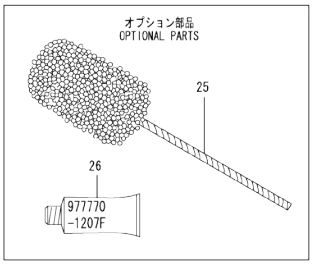

(A)=3TNV76-MNK (D)=
(B)= (E)=
(C)= (F)=

No.	Lev.	Parts No.	Description	Q'ty (A)	(B)	(C)	(D)	(E)	(F)	I	R
1	1	719717-92890	GASKET SET	1							1
2	2	119717-01330	GASKET, HEAD	1							
3	2	121850-51960	O-RING	1							
4	2	119717-11340	SEAL, VALVE STEM	3							
5	2	129901-11450	PROTECTOR, NOZZLE	3							
6	2	119718-11310	GASKET, BONNET	1							
7	2	119717-13110	GASKET	1							
8	2	119717-11350	SEAL, VALVE STEM	3							
9	2	22190-080002	WASHER, SEAL 6	4							
10	2	24311-000320	O-RING, 1AP32.0	2							
11	2	119717-32060	O-RING, P15.0	1							
12	2	119624-32040	O-RING, P12.0	1							
13	2	119717-32050	O-RING, P17.0	3							
14	2	119600-11460	GASKET, NOZZLE	6							
15	2	119717-11331	GASKET	1							
16	2	124465-44950	GASKET, 16	2							
17	2	22190-120002	WASHER, SEAL 12	7							
18	2	129901-59560	GASKET	3							
19	2	119717-42020	GASKET, WATER PUMP	1							
20	2	23414-080000	GASKET, 8X1.0	1							
21	2	22190-220002	WASHER, SEAL 22	1							
22	2	119515-13200	GASKET, SILENCER	1							
23	2	24341-000240	O-RING, 1AS24.0	1							
24	2	119742-26080	GASKET	1							
25	1	129400-92420	FLEX HORN	1							1
26	1	977770-1207F	GASKET.LIQUID	1							1

Remarks
(1) OPTIONAL PART.

N:Old ←Yes/No→ New. Q:Old ←No/Yes→ New. R:Old ←Yes/Yes→ New. S:Old ←No/No→ New. W:Add. Z:Discontinued. F:Interchangeable by set. K:Q'ty Change

Copyright (C) YANMAR CO., LTD. All RightsReserved.

Parts No. Index

Parts No.	Fig. No.	Ref. No.
101304-59020	12	52
102103-55520	13	3
103854-39140	12	51
104200-55330	13	9
104200-55750	13	11
105010-11490	4	5
105311-01090	1	5
105425-01690	3	9
110250-55610	13	4
114110-07760	13	19
118200-53010	12	2
118400-51370	10	55
119131-18320	5	5
119225-52102	13	12
119233-77932	11	132
119285-01990	1	8
119285-11990	4	13
119305-35151	8	3
119415-61550	11	96
119515-13200	5	7
	16	22
119515-59581	12	32
119515-61440	11	21
119540-59570	12	40
119600-11460	4	4
	16	14
119620-01750	3	4
119620-02020	1	9
119620-11280	4	29
119620-14200	6	1
119620-21941	7	13
119620-59700	12	43
119620-77461	15	13
119620-77471	15	14
119620-77490	15	15
119620-79200	15	8
119620-79210	15	9
119620-79220	15	10
119620-79230	15	11
119620-79250	15	6
119620-79290	15	19
119620-79300	15	20
119620-79310	15	21
119620-79320	15	22
119620-79330	15	23
119620-79340	15	24
119620-79350	15	25
119621-21680	7	12
119623-01250	1	6
119624-32040	2	20

Parts No.	Fig. No.	Ref. No.
119624-32040	16	12
119626-77210	15	2
119626-77450	15	26
119626-77710	15	16
119636-21580	7	8
119660-01911	2	19
119660-61901	11	65
119717-01330	1	27
	16	2
119717-01501	2	1
119717-01521	2	6
119717-01570	2	3
119717-01601	3	2
119717-01720	3	7
119717-01750	2	18
119717-01770	3	8
119717-01800	2	7
119717-02411	1	12
119717-02930	1	23
119717-03031	4	40
119717-03070	4	41
		42
119717-11101	4	15
119717-11110	4	16
119717-11131	4	17
119717-11190	4	19
119717-11200	4	24
119717-11240	4	25
119717-11260	4	28
119717-11320	4	51
119717-11331	4	52
	16	15
119717-11340	4	20
	16	4
119717-11350	4	21
	16	8
119717-11381	4	39
119717-11650	4	30
119717-11740	4	6
119717-11800	4	22
119717-13109	5	1
119717-13110	5	2
	16	7
119717-13600	5	3
119717-14400	6	2
119717-14581	6	3
119717-21200	7	5
119717-21650	7	11
119717-21700	7	1
119717-22080	7	14

Parts No.	Fig. No.	Ref. No.
119717-22300	7	20
119717-22500	7	16
119717-22550	7	31
119717-22900	7	29
119717-23000	7	22
119717-23200	7	25
119717-23601	7	26
119717-23611	7	35
119717-23910	7	28
119717-25050	6	9
119717-25101	6	10
119717-25911	6	13
119717-25930	6	16
119717-32050	2	21
	16	13
119717-32060	8	4
	16	11
119717-32080	2	10
119717-32100	2	9
119717-32110	2	14
119717-32120	2	15
119717-34801	8	1
119717-35080	8	5
119717-39210	8	8
119717-42002	9	1
119717-42020	9	13
	16	19
119717-42031	9	4
119717-42041	9	3
119717-42320	9	11
119717-49800	9	21
119717-51030	10	6
119717-51060	10	7
119717-51070	10	8
119717-51150	6	17
119717-51190	10	16
119717-51200	10	17
119717-51300	10	44
119717-51330	10	47
119717-51420	10	56
119717-51480	10	90
119717-51490	10	91
119717-51500	10	65
119717-51570	10	15
119717-51711	10	76
119717-51750	10	77
119717-51761	10	78
119717-53001	12	1
119717-53010	12	3
119717-59510	12	33

Parts No.	Fig. No.	Ref. No.
119717-59810	12	20
119717-59820	12	24
119717-59830	12	28
119717-61050	11	2
119717-61060	11	3
119717-61070	11	4
119717-61100	11	5
119717-61120	11	8
119717-61130	11	9
119717-61140	11	10
119717-61150	11	11
119717-61200	11	70
119717-61400	11	14
119717-61500	11	30
119717-77010	14	2
119717-77340	15	28
119717-77800	4	57
119717-77820	4	58
119718-11310	4	50
	16	6
119734-01590	2	4
119740-42350	9	17
119740-42370	9	18
119740-51100	10	10
119740-55600	13	1
119742-26080	16	24
119802-03100	4	43
119802-03110	4	44
119802-03121	4	45
119802-03131	4	46
119802-03141	4	47
119802-13620	5	4
119802-32130	2	16
119802-55700	13	13
119802-55710	13	14
119802-55730	13	18
119802-77200	15	31
119810-01200	1	26
119810-02941	1	34
119810-55340	13	8
119810-55650	13	6
119813-59950	12	44
119865-21600	7	10
119940-77270	15	27
121111-21501	7	7
121120-01620	3	3
121250-44901	9	24
121250-55620	13	5
121252-39450	8	7
121254-55510	13	2

Parts No. Index

Parts No.	Fig. No.	Ref. No.
121256-44600	9	35
121450-42450	9	23
121520-34810	8	13
121850-51960	2	22
	16	3
122710-51090	10	9
124060-01050	1	4
124066-59100	12	41
124085-02220	3	5
124160-01751	2	2
	4	38
124160-01910	1	7
124450-44510	9	29
124450-44530	9	31
124450-44550	9	34
124450-44560	9	32
124465-44950	9	25
	16	16
124550-51350	10	48
125301-79240	15	5
128401-77440	15	12
129001-32320	2	12
129001-32330	2	13
129005-59830	8	9
129008-61301	11	74
129052-61390	11	13
129052-77380	15	4
129052-77422	15	7
129052-79260	15	17
129052-79270	15	18
129100-01580	3	1
	7	2
129100-35140	8	2
129100-51560	10	70
129100-51570	10	71
129100-52200	10	95
129100-55690	13	15
129100-61650	11	59
129150-11230	4	31
129150-11750	4	33
129150-25301	6	15
129150-59120	12	15
129150-59131	12	18
129155-51020	10	5
129155-51140	10	13
129155-51280	10	42
		43
	11	6
129155-51400	10	57
129155-51450	10	60

Parts No.	Fig. No.	Ref. No.
129155-51521	10	66
129155-51530	10	67
129155-51540	10	68
129155-51550	10	69
129155-51580	10	73
129155-51591	10	74
129155-51600	10	22
129155-51701	10	75
129155-52051	10	94
129155-61341	11	75
129155-61450	11	22
129155-61460	11	76
129155-61480	11	24
129156-61460	11	23
129209-61370	11	12
129209-61920	11	86
129209-61930	11	130
129209-61970	11	131
129211-77920	15	32
129350-49530	9	20
129400-92420	16	25
129457-44760	9	27
129486-61540	11	49
129508-11180	4	18
129900-07900	4	1
129900-32130	2	11
129901-11450	4	3
	16	5
129901-53800	12	4
129901-59560	12	39
	16	18
129916-49740	9	12
129972-77341	15	29
158552-61700	11	60
158552-61710	11	64
158552-61900	11	81
158600-51170	10	14
158600-51270	10	41
158600-51410	10	58
158600-51420	10	59
158600-51442	10	49
158600-51570	10	72
158600-51790	10	79
158601-61710	11	88
171056-49120	9	26
171340-44740	9	28
171353-61700	11	129
174307-51700	11	31
22190-080002	8	10
		12

Parts No.	Fig. No.	Ref. No.
22190-080002	16	9
22190-100002	11	77
22190-120002	11	78
	12	50
		53
		54
	16	17
22190-160002	3	11
	10	80
22190-220002	16	21
22217-060000	10	81
22217-120000	6	18
22242-000120	4	34
22252-000220	7	21
22272-000030	11	66
22351-050010	10	82
22351-060012	4	23
22372-040000	11	79
22512-040120	7	4
22857-500100	4	53
		54
22857-500160	4	49
23061-070230	9	33
23414-080000	9	14
	16	20
23414-120016	11	133
23857-030000	8	11
23876-005000	4	14
23876-030000	2	8
23887-100002	11	80
24101-060034	10	83
24101-063034	10	84
24311-000160	13	17
24311-000320	2	17
	4	36
	16	10
24311-240100	13	10
24316-000150	10	85
24321-000650	13	16
24341-000070	11	67
24341-000240	16	23
26022-050122	10	86
26022-060162	10	87
26106-050102	10	88
26106-060102	8	6
	11	68
		82
26106-060122	2	23
	6	8
26106-060142	11	83

Parts No.	Fig. No.	Ref. No.
26106-060162	2	24
26106-060202	4	55
	11	84
26106-060352	6	14
26106-060402	2	25
		26
26106-060452	9	19
	11	85
26106-060602	2	27
26106-060652	2	28
26106-060752	4	56
26106-080122	3	12
	9	15
26106-080162	4	2
26106-080202	9	22
	15	30
26106-080302	3	13
26106-080402	4	37
26106-080452	3	14
26106-080502	3	15
	9	16
26106-100252	14	1
26106-100502	15	1
26206-100252	3	6
26306-080002	2	29
	5	6
26366-080002	11	69
26577-060122	9	9
26716-060002	10	89
26716-120002	6	19
26756-060002	11	87
26979-050162	4	35
27241-120000	1	13
27241-250000	9	10
719717-01561	1	1
719717-02901	1	28
719717-02911	1	31
719717-92890	16	1
719734-01500	2	5
719744-51380	10	1
977770-1207F	16	26
X0280210331	14	24
X0280335350	14	34
X0280626010	14	13
X0280996180	14	4
X0281007750	14	3
X0282005991	14	7
X0283006960	14	8
X0284105040	14	14
X0284525010	14	28

Parts No. Index

Parts No.	Fig. No.	Ref. No.
X0285007030	14	11
X0285105190	14	5
X0285205030	14	6
X0286105010	14	16
X0286305010	14	18
X0286355010	14	19
X0287405140	14	20
X0534007800	14	21
X1289510130	14	35
X4284001590	14	9
X9055715000	14	22
X9490065670	14	33
X9490138090	14	26
X9490138100	14	27
X9490138110	14	25
X9490423420	14	31
X9490560750	14	30
X9490561001	15	3
X9490562360	14	29
X9490721360	14	23
X9491034320	14	17
X9491034330	14	15
X9491040990	14	12
X9491050100	14	10

Parts No.	Fig. No.	Ref. No.

Parts No.	Fig. No.	Ref. No.

Parts No.	Fig. No.	Ref. No.