YANMAR

PARTS CATALOG

0CD50-M00260EN

Last update Mar., 2021

PREFACE

This parts catalog is the 1st edition of 3TNV76-SSU for Sunward.

Published : April, 2014

Contents

0CD50-M00260

Fig. No.	Fig. Name
3TNV76-SSU	
1.	CYLINDER BLOCK
2.	GEAR HOUSING
3.	FLYWHEEL HOUSING & OIL SUMP
4.	CYLINDER HEAD & BONNET
5.	AIR CLEANER
6.	EXHAUST MANIFOLD
7.	CAMSHAFT & DRIVING GEAR
8.	CRANKSHAFT & PISTON
9.	LUB. OIL SYSTEM
10.	COOLING WATER SYSTEM
11.	FUEL INJECTION PUMP
12.	GOVERNOR
13.	FUEL INJECTION VALVE
14.	FUEL PIPE
15.	STARTING MOTOR
16.	GENERATOR
17.	GASKET SET

Fig. No.	Fig. Name

Fig.1. CYLINDER BLOCK

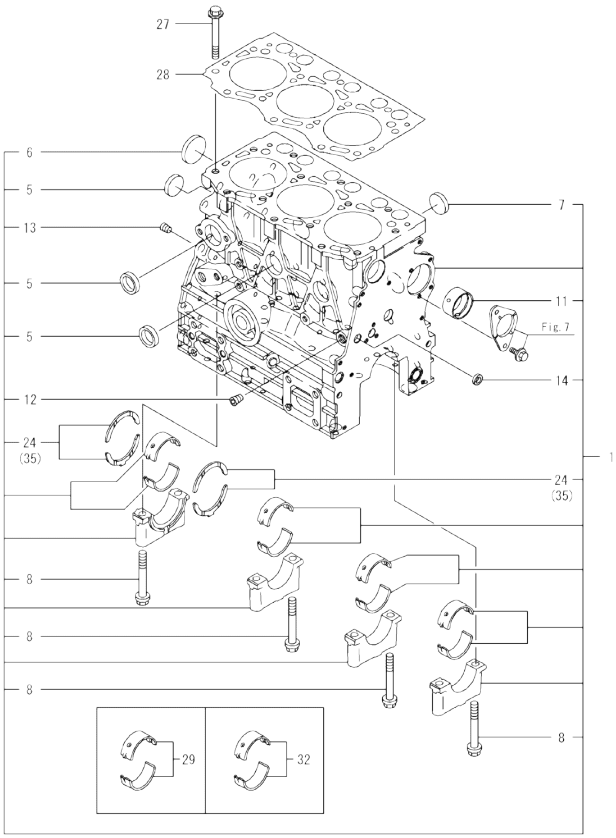

Remarks
(1)Spare parts.
(2)Under-sized(U.S.=0.25)parts.
(3)Over-sized(O.S.=0.25)parts.

(A)=3TNV76-SSU (D)=
(B)= (E)=
(C)= (F)=

No.	Lev.	Parts No.	Description	Q'ty (A)	(B)	(C)	(D)	(E)	(F)	I	R
1	1	719717-01561	BLOCK ASSY, CYLINDER	1							
5	2	105311-01090	PLUG, 30	4							
6	2	119623-01250	PLUG, 45	1							
7	2	119285-01990	PLUG, 25	3							
8	2	119620-02020	BOLT, METAL CAP	8							
11	2	119717-02411	BUSH, CAMSHAFT	1							
12	2	124060-01050	PLUG, PT1/8	1							
13	2	124160-01910	PLUG, PT1/4	1							
14	2	27241-120000	PLUG, 12	1							
24	2	119717-02930	BEARING, THRUST	2							
27	1	119810-01200	BOLT, HEAD	14							
28	1	119717-01331	GASKET, HEAD	1							
29	1	719717-02901	BEARING, MAIN	4							1
32	1	719717-02911	BEARING, 0.25 US	4							2
35	1	119810-02941	BEARING, THRUST 0.25	2							3

N:Old ←Yes/No→ New. Q:Old ←No/Yes→ New, R:Old ←Yes/Yes→ New, S:Old ←No/No→ New. W:Add. Z:Discontinued. F:Interchangeable by set. K:Q'ty Change

Copyright (C) 2014 YANMAR GLOBAL CS CO., LTD. All RightsReserved.

Fig.2. GEAR HOUSING

(A)=3TNV76-SSU
(B)=
(C)=
(D)=
(E)=
(F)=

No.	Lev.	Parts No.	Description	Q'ty (A)	(B)	(C)	(D)	(E)	(F)	I	R
1	1	119717-01501	CASE, GEAR	1							
3	1	119717-01570	STUD	3							
4	1	119734-01590	COVER ASSY,GEAR CASE	1							
5	2	719734-01500	COVER ASSY,GEAR CASE	1							
6	3	119717-01521	COVER, GEAR CASE	1							
8	4	23876-030000	PLUG, R03	2							
9	3	119717-01800	SEAL, OIL	1							
10	2	119717-32100	COVER ASSY	1							
11	3	119717-32080	COVER	1							
12	3	129900-32130	VALVE, RELIEF	1							
13	3	129001-32320	SPRING	1							
14	3	129001-32330	PLUG	1							
15	2	119717-32110	ROTOR, INNER	1							
16	2	119717-32120	ROTOR, OUTER	1							
17	2	119802-32130	SCREW, M6X16	8							
18	1	119717-01750	COVER	1							
19	1	119660-01911	PIPE, KNOCK	4							
20	1	119624-32040	O-RING, P12.0	1							
21	1	119717-32050	O-RING, P17.0	3							
22	1	121850-51960	O-RING	1							
23	1	26106-060122	BOLT, M6X 12 PLATED	1							
24	1	26106-060162	BOLT, M6X 16 PLATED	4							
25	1	26106-060402	BOLT, M6X 40 PLATED	4							
26	1	26106-060402	BOLT, M6X 40 PLATED	3							
27	1	26106-060602	BOLT, M6X 60 PLATED	7							
28	1	26106-060652	BOLT, M6X 65 PLATED	2							
29	1	26306-080002	NUT, M8	3							
30	1	124160-01751	COVER, FILLER	1							
31	1	24311-000320	O-RING, 1AP32.0	1							

N:Old ←Yes/No→ New. Q:Old ←No/Yes→ New. R:Old ←Yes/Yes→ New. S:Old ←No/No→ New. W:Add. Z:Discontinued. F:Interchangeable by set. K:Q'ty Change

Copyright (C) 2014 YANMAR GLOBAL CS CO., LTD. All RightsReserved.

Fig.3. FLYWHEEL HOUSING & OIL SUMP

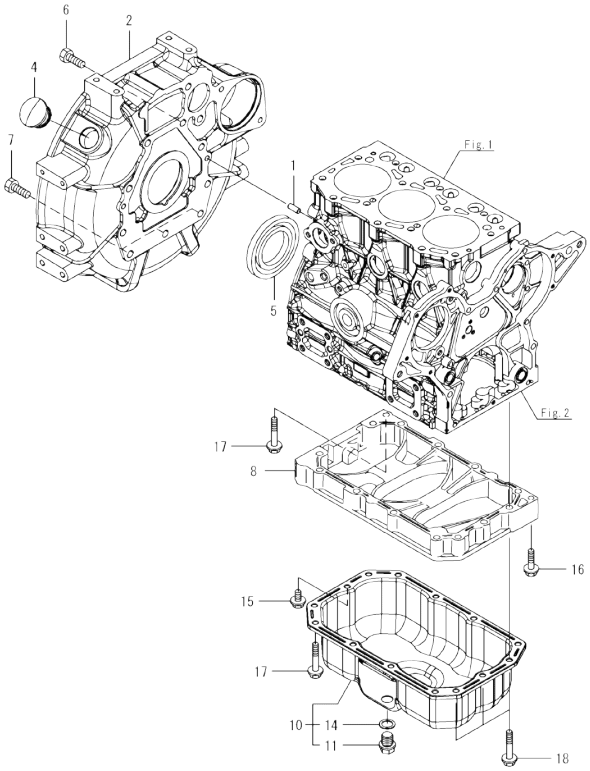

(A)=3TNV76-SSU (D)=
(B)= (E)=
(C)= (F)=

No.	Lev.	Parts No.	Description	Q'ty (A)	(B)	(C)	(D)	(E)	(F)	I	R
1	1	129100-01580	PIN, 8X16	2							
2	1	119717-01601	HOUSING, FLYWHEEL	1							
4	1	119620-01750	CAP	1							
5	1	119734-02220	SEAL, OIL	1							
6	1	26206-100252	BOLT, M10X 25 PLATED	8							
7	1	26206-100302	BOLT, M10X 30 PLATED	3							
8	1	119717-01720	SPACER, OIL SUMP	1							
10	1	119740-01770	SUMP ASSY, OIL	1							
11	2	105425-01690	PLUG, 16	1							
14	2	22190-160002	WASHER, SEAL 16	1							
15	1	26106-080122	BOLT, M8X 12 PLATED	1							
16	1	26106-080302	BOLT, M8X 30 PLATED	1							
17	1	26106-080452	BOLT, M8X 45 PLATED	11							
18	1	26106-080502	BOLT, M8X 50 PLATED	3							

N:Old ←Yes/No→ New. Q:Old ←No/Yes→ New. R:Old ←Yes/Yes→ New. S:Old ←No/No→ New. W:Add. Z:Discontinued. F:Interchangeable by set. K:Q'ty Change

Copyright (C) 2014 YANMAR GLOBAL CS CO., LTD. All RightsReserved.

Fig.4. CYLINDER HEAD & BONNET

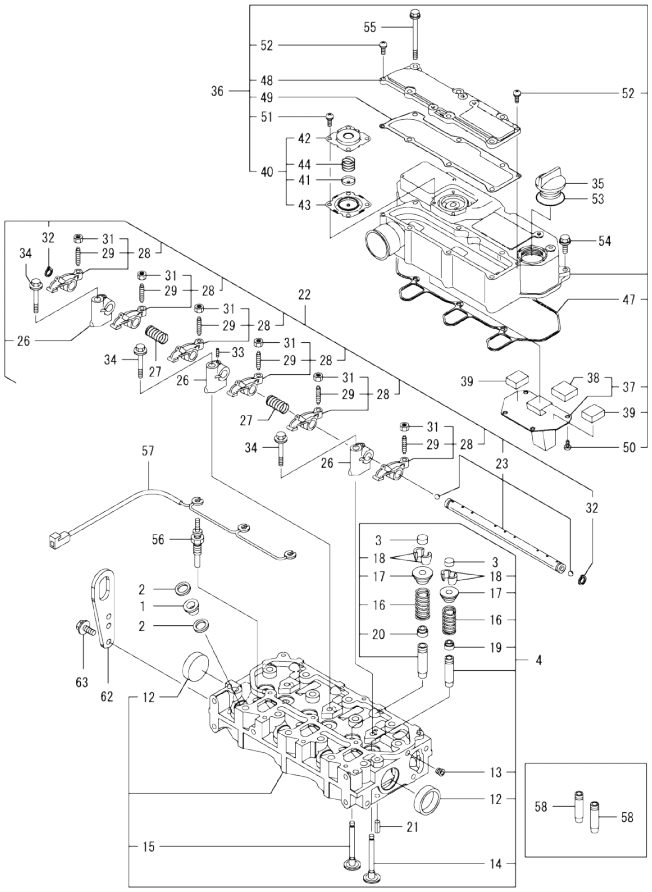

				(A)=3TNV76-SSU	(B)=	(C)=	(D)=	(E)=	(F)=		
No.	Lev.	Parts No.	Description	Q'ty (A)	(B)	(C)	(D)	(E)	(F)	I	R
1	1	129901-11450	PROTECTOR, NOZZLE	3							
2	1	119600-11460	GASKET, NOZZLE	6							
3	1	105010-11490	CAP, VALVE	6							
4	1	119717-11740	HEAD ASSY, CYLINDER	1							
12	2	119285-11990	PLUG, 35	2							
13	2	23876-005000	PLUG, R005	1							
14	2	119717-11101	VALVE, INTAKE	3							
15	2	119717-11110	VALVE, EXHAUST	3							
16	2	119717-11131	SPRING, VALVE	6							
17	2	129508-11180	RETAINER, SPRING	6							
18	2	119717-11190	COTTER, VALVE	12							
19	2	119717-11340	SEAL, VALVE STEM	3							
20	2	119717-11350	SEAL, VALVE STEM	3							
21	1	22351-060012	PIN, SPRING 6.0X12	2							
22	1	119717-11200	SUPPORT ASSY, ROCKER	1							
23	2	119717-11240	SHAFT ASSY, ARM	1							
26	2	119717-11260	SUPPORT, ROCKER ARM	3							
27	2	119620-11280	SPRING, SHAFT	2							
28	2	119717-11650	ARM ASSY, ROCKER INT	6							
29	3	129150-11230	SCREW, VALVE ADJUST	6							
31	3	129150-11750	NUT, M8XP1.0	6							
32	2	22242-000120	RING, 12	2							
33	2	26979-050162	SCREW, M5X16	1							
34	1	26106-080402	BOLT, M8X 40 PLATED	3							
35	1	124160-01751	CAP, FILLER	1							
36	1	119717-11381	BONNET ASSY, HEAD	1							
37	2	119717-03031	PLATE, BAFFLE	1							
38	3	119717-03070	BAFFLE, BREATHER	1							
39	2	119717-03070	BAFFLE, BREATHER	2							
40	2	119802-03100	DIAPHRAGM ASSY	1							
41	3	119802-03110	PLATE, DIAPHRAGM	1							
42	3	119802-03121	COVER, DIAPHRAGM	1							
43	3	119802-03131	DIAPHRAGM, BREATHER	1							
44	3	119802-03141	SPRING, DIAPHRAGM	1							
47	2	119718-11310	GASKET, BONNET	1							
48	2	119717-11320	COVER, BONNET	1							
49	2	119717-11331	GASKET, BONNET COVER	1							
50	2	22857-500100	SCREW, 5X10	4							
51	2	22857-500100	SCREW, 5X10	4							
52	2	22857-500160	SCREW, 5X16	2							
53	1	24311-000320	O-RING, 1AP32.0	1							
54	1	26106-060202	BOLT, M6X 20 PLATED	3							
55	1	26106-060752	BOLT, M6X 75 PLATED	6							
56	1	119717-77801	PLUG, GLOW	3							
57	1	119717-77820	CONNECTOR, GLOW PLUG	1							
58	1	119717-11800	GUIDE, VALVE	6							1
62	1	119226-07900	LIFTER, ENGINE	1						W	
	(A=EN6715)										
63	1	26106-080162	BOLT, M8X 16 PLATED	2						W	
	(A=EN6715)										

Remarks
(1)Spare parts.

N:Old ←Yes/No→ New. Q:Old ←No/Yes→ New. R:Old ←Yes/Yes→ New. S:Old ←No/No→ New. W:Add. Z:Discontinued. F:Interchangeable by set. K:Q'ty Change

Copyright (C) 2014 YANMAR GLOBAL CS CO., LTD. All RightsReserved.

Fig.5. AIR CLEANER

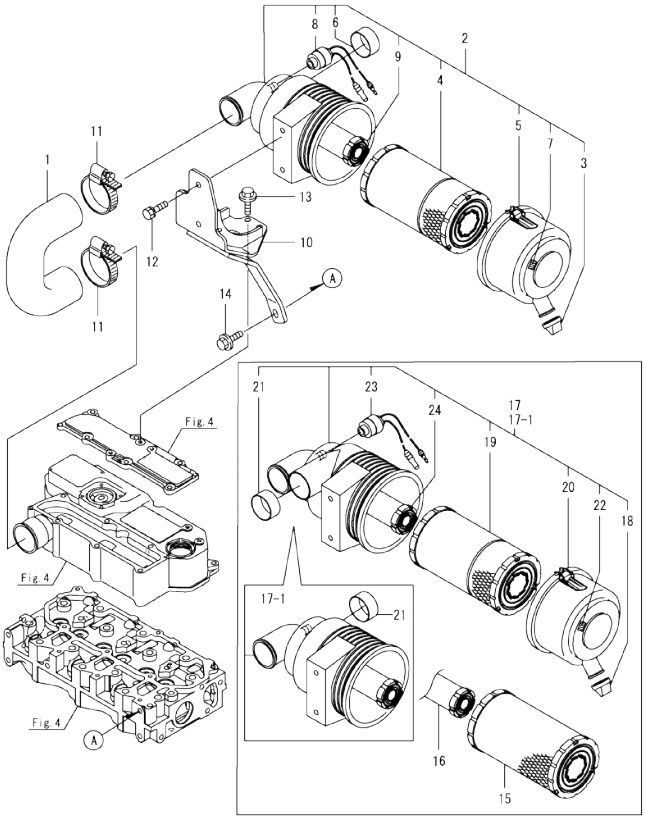

(A)=3TNV76-SSU (D)=
(B)= (E)=
(C)= (F)=

No.	Lev.	Parts No.	Description	Q'ty (A)	(B)	(C)	(D)	(E)	(F)	I	R
1	1	119761-12020	HOSE, AIR INTAKE	1						Z	
	(A=EN6715)										
2	1	119540-12520	CLEANER ASSY, AIR	1						Z	
	(A=EN6715)										
3	2	119808-12540	VALVE, UNLODER	1						Z	
	(A=EN6715)										
4	2	119655-12560	ELEMENT, AIR CLEANER	1						Z	
	(A=EN6715)										
5	2	119336-12570	COVER ASSY, CLEANER	1						Z	
	(A=EN6715)										
6	2	105027-12580	RING, VALVE	1						Z	
	(A=EN6715)										
7	2	129612-12650	LABEL, MARKING	1						Z	
	(A=EN6715)										
8	2	119140-12680	INDICATOR, CLEANER	1						Z	
	(A=EN6715)										
9	2	119233-12700	ELEMENT, INNER	1						Z	
	(A=EN6715)										
10	1	119761-12540	SUPPORT, CLEANER	1						Z	
	(A=EN6715)										
11	1	23000-054000	CLAMP, 54	2						Z	
	(A=EN6715)										
12	1	26013-080222	BOLT, M8X 22	2						Z	
	(A=EN6715)										
13	1	26106-060142	BOLT, M6X 14 PLATED	3						Z	
	(A=EN6715)										
14	1	26106-080162	BOLT, M8X 16 PLATED	1						Z	
	(A=EN6715)										
15	1	119515-12520	ELEMENT, AIR CLEANER	1							1
16	1	119233-12700	ELEMENT, INNER	1							1
17	1	119540-12510	CLEANER ASSY, AIR	1						W	1
	(A=EN6715)										
17-1	1	119540-12520	CLEANER ASSY, AIR	1						S	1
	(A=EV4276)										
18	2	119808-12540	VALVE, UNLODER	1						W	1
	(A=EN6715)										
19	2	119655-12560	ELEMENT, AIR CLEANER	1						W	1
	(A=EN6715)										
20	2	119336-12570	COVER ASSY, CLEANER	1						W	1
	(A=EN6715)										
21	2	105027-12580	RING, VALVE	1						W	1
	(A=EN6715)										
22	2	129612-12650	LABEL, MARKING	1						W	1
	(A=EN6715)										
23	2	119140-12680	INDICATOR, CLEANER	1						W	1
	(A=EN6715)										
24	2	119233-12700	ELEMENT, INNER	1						W	1
	(A=EN6715)										

Remarks
(1)Loose parts.

N:Old $\frac{\text{Yes}}{\text{No}}$ New. Q:Old $\frac{\text{No}}{\text{Yes}}$ New. R:Old $\frac{\text{Yes}}{\text{Yes}}$ New. S:Old $\frac{\text{No}}{\text{No}}$ New. W:Add. Z:Discontinued. F:Interchangeable by set. K:Q'ty Change

Copyright (C) 2014 YANMAR GLOBAL CS CO., LTD. All RightsReserved.

Fig.6. EXHAUST MANIFOLD

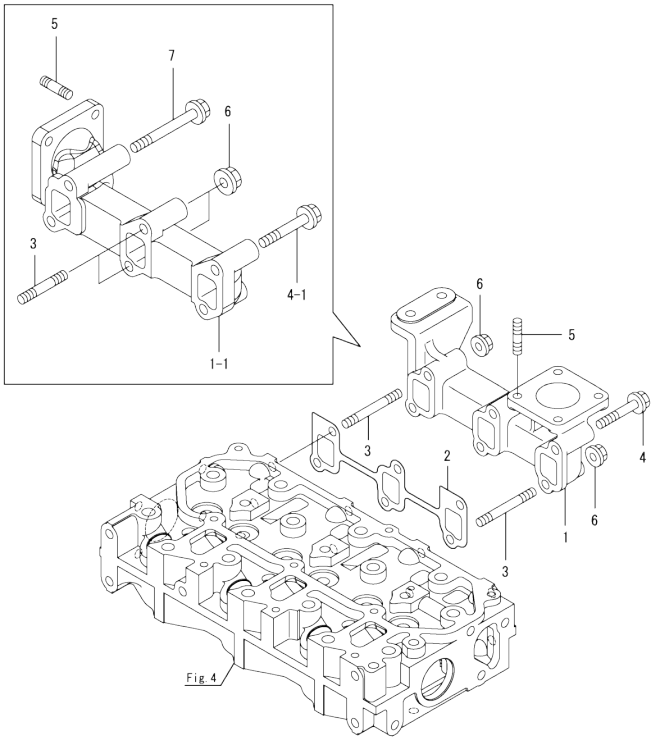

(A)=3TNV76-SSU (D)=
(B)= (E)=
(C)= (F)=

No.	Lev.	Parts No.	Description	Q'ty (A)	(B)	(C)	(D)	(E)	(F)	I	R
1	1	119717-13109	MANIFOLD, EXHAUST	1							
1-1	1	119740-13100	MANIFOLD, EXHAUST	1							N
	(A=EN6715)										
2	1	119717-13110	GASKET, MANIFOLD	1							
3	1	119717-13600	STUD, M8X50	2							
4	1	119802-13620	BOLT, M8X50	4							
4-1	1	129E00-13610	BOLT, M8X50 10.9	2							K
	(A=EN6715)										
5	1	119131-18320	STUD, M8X22	4							
6	1	26306-080002	NUT, M8	2							
7	1	129E00-13630	BOLT, M8X71 10.9T	2							W
	(A=EN6715)										

N:Old ←Yes/No→ New. Q:Old ←No/Yes→ New. R:Old ←Yes/Yes→ New. S:Old ←No/No→ New. W:Add. Z:Discontinued. F:Interchangeable by set. K:Q'ty Change

Copyright (C) 2014 YANMAR GLOBAL CS CO., LTD. All RightsReserved.

Fig.7. CAMSHAFT & DRIVING GEAR

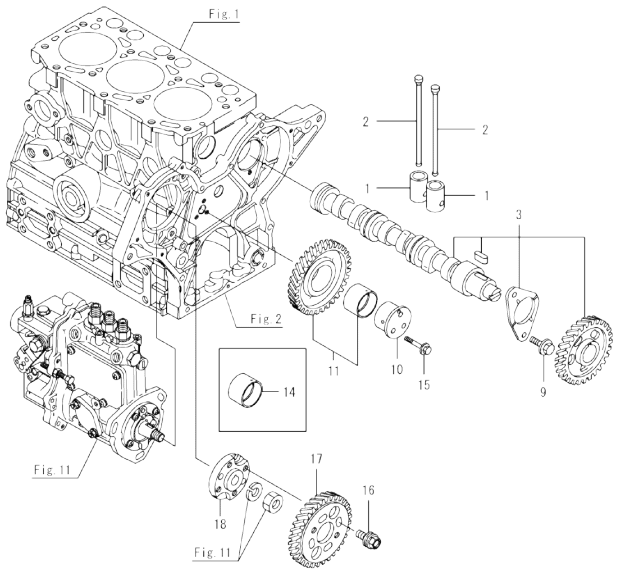

(A)=3TNV76-SSU (D)=
(B)= (E)=
(C)= (F)=

No.	Lev.	Parts No.	Description	Q'ty (A)	(B)	(C)	(D)	(E)	(F)	I	R
1	1	119620-14200	TAPPET	6							
2	1	119717-14400	ROD, PUSH	6							
3	1	119717-14581	CAMSHAFT ASSY	1							
9	1	26106-060122	BOLT, M6X 12 PLATED	2							
10	1	119717-25050	SHAFT, IDLE	1							
11	1	119717-25101	GEAR ASSY, IDLE	1							
14	1	119717-25911	BUSH, IDLE GEAR	1							1
15	1	26106-060352	BOLT, M6X 35 PLATED	3							
16	1	129150-25301	BOLT	4							
17	1	119717-25930	GEAR, PUMP	1							
18	1	119717-51150	FLANGE	1							

Remarks
(1)Spare parts.

N:Old ◄Yes/No► New. Q:Old ◄No/Yes► New. R:Old ◄Yes/Yes► New. S:Old ◄No/No► New. W:Add. Z:Discontinued. F:Interchangeable by set. K:Q'ty Change

Copyright (C) 2014 YANMAR GLOBAL CS CO., LTD. All RightsReserved.

Fig.8. CRANKSHAFT & PISTON

(A)=3TNV76-SSU
(B)=
(C)=
(D)=
(E)=
(F)=

No.	Lev.	Parts No.	Description	Q'ty (A)	(B)	(C)	(D)	(E)	(F)	I	R
1	1	119717-21700	CRANKSHAFT ASSY	1							
2	2	129100-01580	PIN, 8X16	1							
5	2	119717-21200	GEAR, CRANKSHAFT	1							
6	2	22512-040120	KEY, 4X 12	1							
8	1	121111-21501	BOLT, FLYWHEEL	5							
9	1	119636-21580	FLYWHEEL ASSY	1							
12	2	119865-21600	GEAR, RING	1							
13	1	119717-21650	V-PULLEY	1							
14	1	119621-21681	BOLT, FLANGE 12X1.25	1							
15	1	119620-21941	WASHER	1							
16	1	119717-22080	PISTON ASSY	3							
18	2	119717-22500	RING SET, PISTON	3							
22	1	119717-22300	PIN, PISTON	3							
23	1	22252-000220	RING, 22	6							
24	1	119717-23000	ROD ASSY, CONNECTING	3							
28	2	119717-23200	BOLT, CONNECTING ROD	6							
29	2	119717-23601	BEARING, CRANK PIN	3							
31	1	119717-23910	BEARING, PISTON PIN	3							1
32	1	119717-23611	METAL ASSY, 0.25	3							2
34	1	119717-22090	PISTON ASSY, 0.25 OS	3							3
36	2	119717-22550	RING SET, 0.25 OS	3							3

Remarks
(1)Spare parts.
(2)Under-sized(U.S.=0.25)part.
(3)Over-sized(O.S.=0.25)part.

N:Old $\xleftarrow[\text{No}]{\text{Yes}}$ New. Q:Old $\xleftarrow[\text{Yes}]{\text{No}}$ New. R:Old $\xleftarrow[\text{Yes}]{\text{Yes}}$ New. S:Old $\xleftarrow[\text{No}]{\text{No}}$ New. W:Add. Z:Discontinued. F:Interchangeable by set. K:Q`ty Change

Copyright (C) 2014 YANMAR GLOBAL CS CO., LTD. All RightsReserved.

Fig.9. LUB. OIL SYSTEM

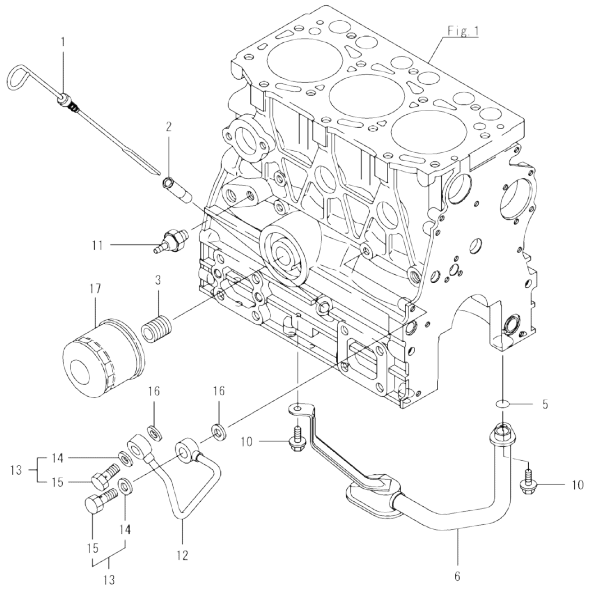

(A)=3TNV76-SSU (D)=
(B)= (E)=
(C)= (F)=

No.	Lev.	Parts No.	Description	Q'ty (A)	(B)	(C)	(D)	(E)	(F)	I	R
1	1	119717-34801	DIPSTICK, OIL	1							
2	1	121520-34810	GUIDE, DIPSTICK	1							
3	1	119717-35140	BOLT	1							
5	1	119717-32060	O-RING, P15.0	1							
6	1	119717-35080	PIPE ASSY, OIL INLET	1							
10	1	26106-060102	BOLT, M6X 10 PLATED	2							
11	1	114250-39450	SWITCH, 0.5KG	1							
12	1	119717-39210	PIPE, OIL	1							
13	1	129005-59830	BOLT ASSY, JOINT M8	2							
14	2	22190-080002	WASHER, SEAL 8	2							
15	2	23857-030000	BOLT, JOINT 3	2							
16	1	22190-080002	WASHER, SEAL 8	2							
17	1	119305-35151	FILTER ASSY, D68XL65	1							1

Remarks
(1)Spare parts.

N:Old ←Yes/No→ New. Q:Old ←No/Yes→ New. R:Old ←Yes/Yes→ New. S:Old ←No/No→ New. W:Add. Z:Discontinued. F:Interchangeable by set. K:Q'ty Change

Copyright (C) 2014 YANMAR GLOBAL CS CO., LTD. All RightsReserved.

Fig.10. COOLING WATER SYSTEM

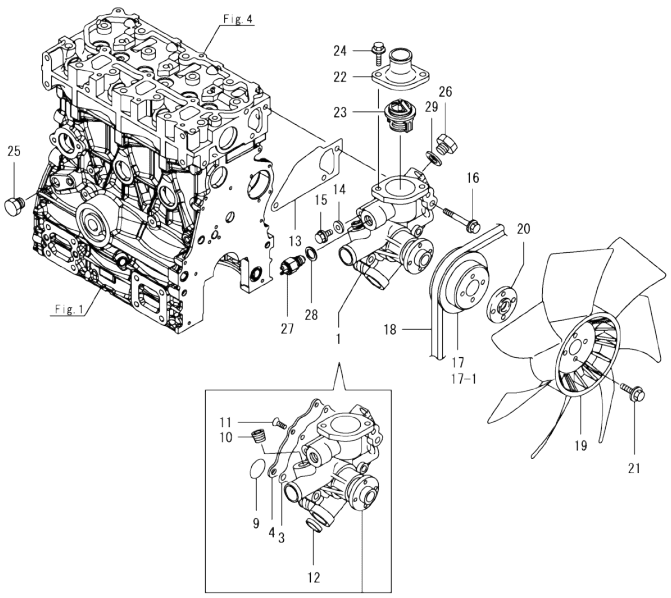

(A)=3TNV76-SSU (D)=
(B)= (E)=
(C)= (F)=

No.	Lev.	Parts No.	Description	Q'ty (A)	(B)	(C)	(D)	(E)	(F)	I	R
1	1	119E10-42000	PUMP ASSY, WATER	1							
3	2	119717-42031	GASKET, WATER PUMP	1							
4	2	119717-42041	COVER, WATER PUMP	1							
9	2	119C10-42320	O-RING, 2028	1							
10	2	129916-49740	PLUG, R3/8	1							
11	2	26577-060122	SCREW, M6X12	4							
12	2	27241-250000	PLUG, 25	1							
13	1	119717-42020	GASKET, WATER PUMP	1							
14	1	23414-080000	GASKET, 8X1.0	1							
15	1	26106-080122	BOLT, M8X 12 PLATED	1							
16	1	26106-080502	BOLT, M8X 50 PLATED	3							
17	1	119515-42350	V-PULLEY, PUMP D110	1							
17-1	1	119740-42350	V-PULLEY, PUMP D=90	1						S	
	(A=EV4276)										
18	1	129258-42290	V-BELT, A36.5	1							
19	1	119717-44740	FAN, COOLING D=335X7	1							
20	1	124574-44761	SPACER, FAN 8MM	1							
21	1	26106-060202	BOLT, M6X 20 PLATED	4							
22	1	129350-49530	COVER, THERMOSTAT	1							
23	1	119717-49800	THERMOSTAT, 71C	1							
24	1	26106-080202	BOLT, M8X 20 PLATED	2							
25	1	171056-49120	PLUG, DRAIN R1/4	1							
26	1	121450-42450	PLUG, M16	1							
27	1	121250-44901	SWITCH, TEMPERATURE	1							
28	1	124465-44950	GASKET, 16	1							
29	1	124465-44950	GASKET, 16	1							

N:Old ←Yes/No→ New. Q:Old ←No/Yes→ New. R:Old ←Yes/Yes→ New. S:Old ←No/No→ New. W:Add. Z:Discontinued. F:Interchangeable by set. K:Q'ty Change

Copyright (C) 2014 YANMAR GLOBAL CS CO., LTD. All RightsReserved.

Fig.11. FUEL INJECTION PUMP

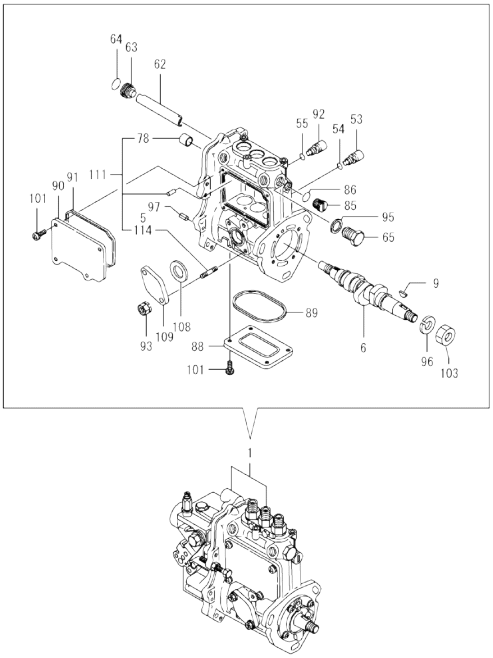

Remarks
(1)Governor(Fig.12)is incorporated in this Fuel Injection Pump (Ref.1).
(2)Spare parts.

(A)=3TNV76-SSU (D)=
(B)= (E)=
(C)= (F)=

No.	Lev.	Parts No.	Description	Q'ty (A)	(B)	(C)	(D)	(E)	(F)	I	R
1	1	719744-51440	FIE ASSY,3TNV76-SSU	1							1
5	2	129155-51020	STUD	2							
6	2	119717-51030	CAMSHAFT	1							
9	2	122710-51090	KEY	1							
53	2	158600-51270	STOPPER, TAPPET	3							
54	2	129155-51280	O-RING, S6	3							
55	2	129155-51280	O-RING, S6	1							
62	2	129155-51400	DEFLECTOR	1							
63	2	158600-51410	PLUG, DEFLECTOR	1							
64	2	119717-51420	O-RING	1							
65	2	158600-51420	PLUG, DEFLECTOR	1							
78	2	119025-51520	BUSH,RACK	1							
85	2	158600-51570	PLUG	1							
86	2	129155-51580	O-RING	1							
88	2	129155-51701	COVER	1							
89	2	119717-51711	GASKET	1							
90	2	119717-51750	COVER	1							
91	2	119717-51761	GASKET	1							
92	2	158600-51790	STOOPER, RACK	1							
93	2	119717-51860	NUT, M6	2							
95	2	22190-160002	WASHER, SEAL 16	1							
96	2	22217-120000	WASHER, SPRING 12	1							
97	2	22351-050010	PIN, SPRING 5.0X10	2							
101	2	26022-050122	SCREW, M5X12	8							
103	2	26716-120002	NUT, M12	1							
108	2	129155-52051	GASKET	1							
109	2	129100-52200	COVER	1							
111	1	119717-51080	BODY SUB ASSY, PUMP	1							2
114	2	129155-51020	STUD	2							2

N:Old ←Yes/No→ New. Q:Old ←No/Yes→ New. R:Old ←Yes/Yes→ New. S:Old ←No/No→ New. W:Add. Z:Discontinued. F:Interchangeable by set. K:Q'ty Change

Copyright (C) 2014 YANMAR GLOBAL CS CO., LTD. All RightsReserved.

Fig.12. GOVERNOR

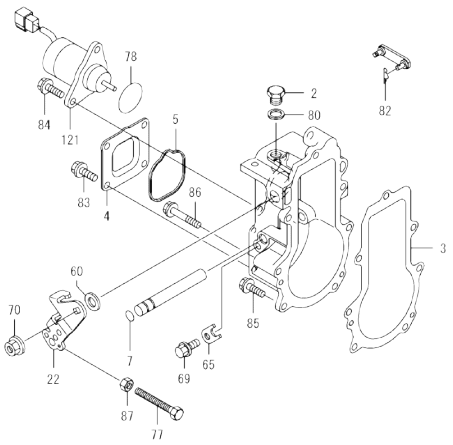

Remarks
*This figure(Governor)is incorporated in the Fuel Injection Pump (Fig.11).

(A)=3TNV76-SSU (D)=
(B)= (E)=
(C)= (F)=

No.	Lev.	Parts No.	Description	Q'ty (A)	(B)	(C)	(D)	(E)	(F)	I	R
2	2	119717-51930	PLUG,M10	1							
3	2	119717-61050	GASKET	1							
4	2	119717-61060	COVER, GOVERNOR CASE	1							
5	2	119717-61070	GASKET	1							
7	3	129155-51280	O-RING, S6	1							
22	3	119515-61440	LEVER, CONTROL	1							
60	3	158552-61700	SHIM SET	1							
65	3	119660-61901	RETAINER, SHAFT	1							
69	3	26106-060102	BOLT, M6X 10 PLATED	1							
70	3	26366-080002	NUT, M8	1							
77	2	129155-61460	BOLT, IDLE	1							
78	2	158552-61900	O-RING	1							
80	2	22190-100002	WASHER, SEAL 10	1							
82	2	22372-040000	PIN, SNAP 4	1							
83	2	26106-060102	BOLT, M6X 10 PLATED	4							
84	2	26106-060142	BOLT, M6X 14 PLATED	2							
85	2	26106-060202	BOLT, M6X 20 PLATED	4							
86	2	26106-060452	BOLT, M6X 45 PLATED	3							
87	2	26756-060002	NUT, LOCK M6	1							
121	2	119233-77932	SOLENOID, STOP	1							

N:Old ◄Yes/No► New. Q:Old ◄No/Yes► New, R:Old ◄Yes/Yes► New, S:Old ◄No/No► New. W:Add. Z:Discontinued. F:Interchangeable by set. K:Q'ty Change

Copyright (C) 2014 YANMAR GLOBAL CS CO., LTD. All RightsReserved.

Fig.13. FUEL INJECTION VALVE

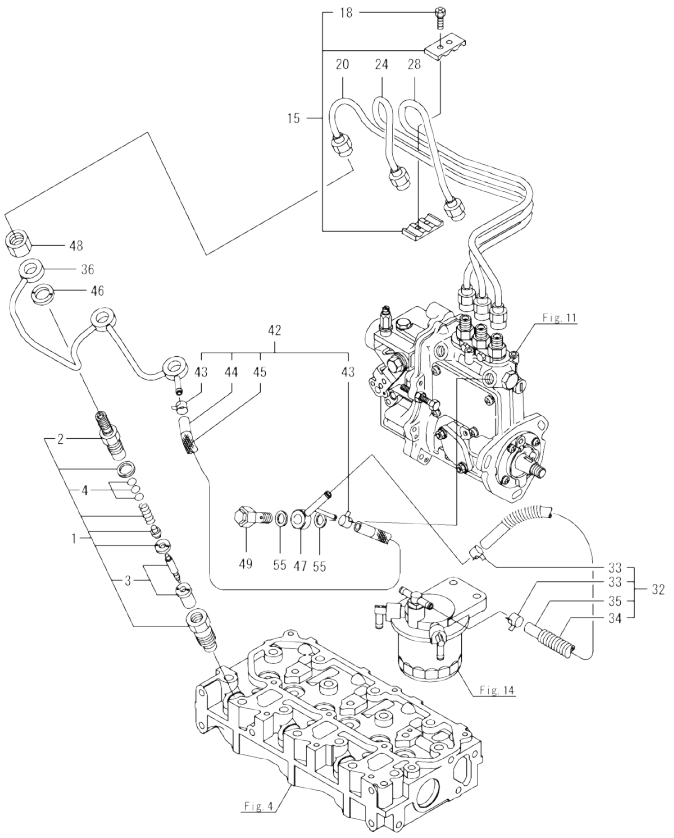

(A)=3TNV76-SSU
(B)=
(C)=
(D)=
(E)=
(F)=

No.	Lev.	Parts No.	Description	Q'ty (A)	(B)	(C)	(D)	(E)	(F)	I	R
1	1	119717-53001	VALVE ASSY,INJECTION	3							
2	2	118200-53010	HOLDER, NOZZLE	3							
3	2	119717-53010	VALVE ASSY,INJECTION	3							
4	2	129901-53800	SHIM SET, ADJUSTING	3							
15	1	129150-59120	RETAINER, PIPE	1							
18	2	129150-59131	BOLT, M4X14	2							
20	1	119717-59810	PIPE, INJECTION NO.1	1							
24	1	119717-59820	PIPE, INJECTION NO.2	1							
28	1	119717-59830	PIPE, INJECTION NO.3	1							
32	1	129956-59010	HOSE ASSY, FUEL	1							Z
	(A=EN6715)										
33	2	124766-59050	CLAMP, HOSE 11.5	2							Z
	(A=EN6715)										
34	2	129957-59101	TUBE, CORRUGATED 15	1							Z
	(A=EN6715)										
35	2	105225-59511	HOSE, FUEL	1							Z
	(A=EN6715)										
36	1	119717-59510	PIPE ASSY, RETURN	1							
42	1	119744-59560	HOSE ASSY, RETURN	1							
43	2	124066-59100	CLAMP, HOSE 8	2							
44	2	119744-59570	PIPE, FUEL RETURN	1							
45	2	129931-59710	PROTECTOR, MESH	1							
46	1	129901-59560	GASKET, FUEL RETURN	3							
47	1	119740-59590	JOINT, OVERFLOW	1							
48	1	119620-59700	NUT, NOZZLE RETURN	3							
49	1	119813-59950	VALVE ASSY, CHECK	1							
55	1	22190-120002	WASHER, SEAL 12	2							

N:Old ◄Yes/No► New. Q:Old ◄No/Yes► New. R:Old ◄Yes/Yes► New. S:Old ◄No/No► New. W:Add. Z:Discontinued. F:Interchangeable by set. K:Q'ty Change

Copyright (C) 2014 YANMAR GLOBAL CS CO., LTD. All RightsReserved.

Fig.14. FUEL PIPE

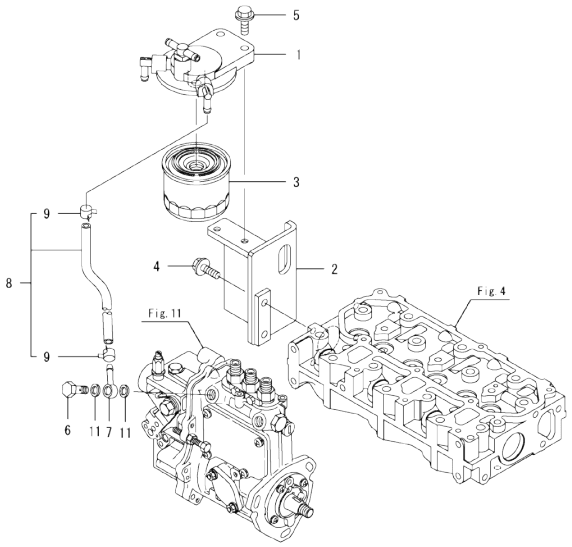

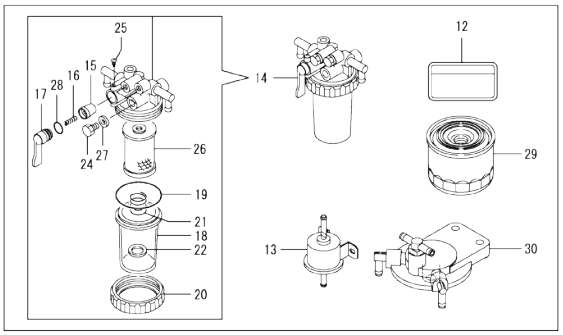

(A)=3TNV76-SSU (D)=
(B)= (E)=
(C)= (F)=

No.	Lev.	Parts No.	Description	Q'ty (A)	(B)	(C)	(D)	(E)	(F)	I	R
1	1	119934-55611	BRACKET, FILTER	1						Z	
	(A=EN6715)										
2	1	119540-55651	BRACKET, FILTER	1						Z	
	(A=EN6715)										
3	1	119802-55801	FILTER, FUEL	1						Z	
	(A=EN6715)										
4	1	26106-080162	BOLT, M8X 16 PLATED	2						Z	
	(A=EN6715)										
5	1	26106-080302	BOLT, M8X 30 PLATED	2						Z	
	(A=EN6715)										
6	1	103854-39140	BOLT, PIPE JOINT	1							
7	1	101304-59020	JOINT, PIPE 12	1							
8	1	129210-59080	HOSE ASSY, FUEL L270	1						Z	
	(A=EN6715)										
9	2	124766-59050	CLAMP, HOSE 11.5	2						Z	
	(A=EN6715)										
11	1	22190-120002	WASHER, SEAL 12	2							
12	1	114110-07761	LABEL, FUEL CAUTION	1							1
13	1	129612-52100	PUMP, FUEL FEED	1							1
14	1	129335-55701	SEPARATOR ASSY,WATER	1							1
15	2	104200-55321	VALVE, TAPER	1							1
16	2	104200-55330	SPRING, FUEL VALVE	1							1
17	2	104200-55341	HANDLE, COCK	1							1
18	2	124064-55510	CUP, FUEL STARINER	1							1
19	2	102103-55520	O-RING, FILTER	1							1
20	2	110250-55610	RING, CUP RETAINING	1							1
21	2	121257-55720	SPRING, ELEMENT	1							1
22	2	121257-55731	FLOAT	1							1
24	2	101720-55750	PLUG, HEXAGON M6	2							1
25	2	104200-55750	SCREW, M4	1							1
26	2	171081-55910	FILTER, FUEL 100M	1							1
27	2	23418-060000	GASKET, 6X1.0	2							1
28	2	24311-240100	O-RING, 1AP10A	1							1
29	1	119802-55801	FILTER, FUEL	1							1
29-1	1	119802-55801	FILTER, FUEL	2						K	1
	(A=EN6715)										
30	1	119934-55611	BRACKET, FILTER	1						W	1
	(A=EN6715)										

Remarks
(1)Loose parts.

N:Old ◄Yes/No► New. Q:Old ◄No/Yes► New. R:Old ◄Yes/Yes► New. S:Old ◄No/No► New. W:Add. Z:Discontinued. F:Interchangeable by set. K:Q'ty Change

Copyright (C) 2014 YANMAR GLOBAL CS CO., LTD. All RightsReserved.

Fig.15. STARTING MOTOR

(A)=3TNV76-SSU
(B)=
(C)=
(D)=
(E)=
(F)=

No.	Lev.	Parts No.	Description	Q'ty (A)	(B)	(C)	(D)	(E)	(F)	I	R
1	1	119740-77020	STARTER	1							
2	2	X0283060061	ROLLER	5							
3	2	129129-77460	SCREW	2							
4	2	X9490561370	NUT	1							
5	2	X9491200240	BALL	1							
6	2	129407-77210	YOKE ASSY	1							
7	2	129407-77220	ARMATURE ASSY	1							
8	3	129129-77230	BEARING, BALL	1							
9	3	129129-77240	BEARING, BALL	1							
10	2	X1280996680	STARTER KIT	1							
11	3	X0280210230	NUT	1							
12	3	X0283270140	RETAINER	1							
13	3	129129-77390	CLUTCH ASSY	1							
14	4	129129-77440	BEARING, BALL	1							
15	4	129129-77450	BEARING, BALL	1							
16	3	129129-77400	SHAFT	1							
17	3	129129-77410	SPRING, COIL	1							
18	3	129407-77410	SPRING	1							
19	3	X0283712350	PINION, STARTER	1							
20	3	129129-77430	RING	1							
21	2	129129-77260	RETAINER	1							
22	2	129129-77270	PINION	1							
23	2	X4284003310	HOUSING	1							
24	2	129407-77290	FRAME	1							
25	2	129407-77300	HOLDER ASSY	1							
26	3	X9491730461	SPRING	4							
27	2	X1534004151	SWITCH ASSY	1							
28	2	129129-77320	BOLT	2							
29	2	129407-77330	BOLT	2							
30	2	129129-77340	SPRING	1							
31	2	129129-77350	O-RING	2							
32	2	129129-77362	COVER	1							
34	2	129129-77380	CAP	1							
35	1	26106-100252	BOLT, M10X 25 PLATED	2							

N:Old $\xleftarrow[\text{No}]{\text{Yes}}$ New. Q:Old $\xleftarrow[\text{Yes}]{\text{No}}$ New. R:Old $\xleftarrow[\text{Yes}]{\text{Yes}}$ New. S:Old $\xleftarrow[\text{No}]{\text{No}}$ New. W:Add. Z:Discontinued. F:Interchangeable by set. K:Q'ty Change

Copyright (C) 2014 YANMAR GLOBAL CS CO., LTD. All RightsReserved.

Fig.16. GENERATOR

(A)=3TNV76-SSU
(B)=
(C)=
(D)=
(E)=
(F)=

No.	Lev.	Parts No.	Description	Q'ty (A)	(B)	(C)	(D)	(E)	(F)	I	R
1	1	129423-77200	GENERATOR, 12V-40A	1							
2	2	X9490561001	NUT	1							
3	2	119620-77380	ROTOR ASSY	1							
4	3	123501-79240	BEARING, BALL	1							
5	3	119620-79250	COVER	1							
6	2	119620-77421	FRAME ASSY, DRIVE	1							
7	3	119620-79200	BEARING, BALL	1							
8	3	119620-79210	PLATE, RETAINER	1							
9	3	119620-79220	SCREW	4							
10	3	119620-79230	STUD	2							
11	2	119620-77440	FRAME ASSY	1							
12	2	119620-77461	PULLEY	1							
13	2	119620-77471	NUT	1							
14	2	119620-77490	COLLAR	1							
15	2	129423-77710	REGULATOR ASSY	1							
16	2	119620-79260	HOLDER	1							
17	2	129052-79270	HOLDER, BRUSH	1							
18	3	119620-77480	BRUSH ASSY	2							
19	3	119620-79280	SPRING	2							
20	2	119620-79290	SCREW	6							
21	2	119620-79300	SCREW	1							
22	2	129240-79300	COVER	1							
23	2	119620-79310	BOLT	3							
24	2	119620-79320	SCREW	2							
25	2	119620-79330	BOLT	2							
26	2	119620-79340	BUSH, INSULATION	1							
27	2	119620-79350	NUT	2							
28	2	119620-79360	WASHER, THRUST	1							
29	1	26106-100452	BOLT, M10X 45 PLATED	1							
30	1	119940-77270	SPACER, GENERATOR	1							
31	1	119734-77310	ADJUSTER	1							
32	1	129972-77341	BOLT, ADJUSTER L=50	1							
33	1	26106-080202	BOLT, M8X 20 PLATED	1							
34	1	119643-66900	DIODE	1							1
35	1	119802-77200	RELAY, SAFETY	1							1
36	1	119650-77911	RELAY ASSY, GLOW	1							1
37	1	129052-77921	BODY, RELAY	1							1
38	1	119650-77930	BRACKET, RELAY	1							1
39	1	129155-77925	TIMER	1							1
40	1	129211-77920	TIMER	1							1

Remarks
(1)Loose parts.

N:Old $\frac{\text{Yes}}{\text{No}}$ New. Q:Old $\frac{\text{No}}{\text{Yes}}$ New. R:Old $\frac{\text{Yes}}{\text{Yes}}$ New. S:Old $\frac{\text{No}}{\text{No}}$ New. W:Add. Z:Discontinued. F:Interchangeable by set. K:Q'ty Change

Copyright (C) 2014 YANMAR GLOBAL CS CO., LTD. All RightsReserved.

Fig.17. GASKET SET

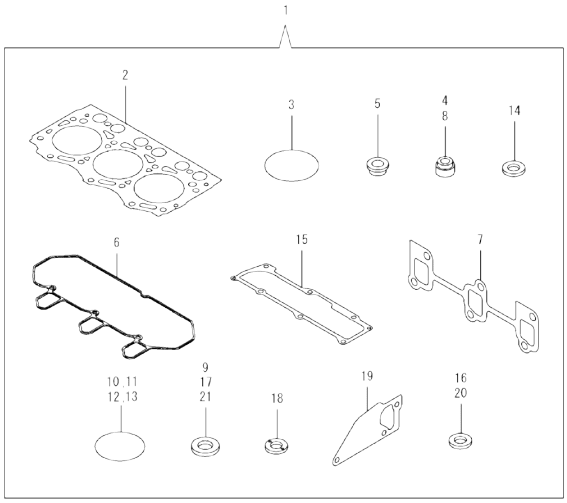

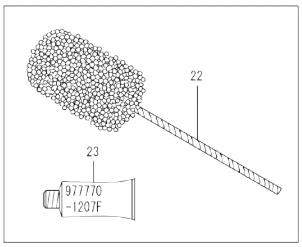

(A)=3TNV76-SSU (D)=
(B)= (E)=
(C)= (F)=

No.	Lev.	Parts No.	Description	Q'ty (A)	(B)	(C)	(D)	(E)	(F)	I	R
1	1	719717-92730	GASKET SET	1							1
2	2	119717-01330	GASKET, HEAD	1							
3	2	121850-51960	O-RING	1							
4	2	119717-11340	SEAL, VALVE STEM	3							
5	2	129901-11450	PROTECTOR, NOZZLE	3							
6	2	119718-11310	GASKET, BONNET	1							
7	2	119717-13110	GASKET	1							
8	2	119717-11350	SEAL, VALVE STEM	3							
9	2	22190-080002	WASHER, SEAL 8	4							
10	2	24311-000320	O-RING, 1AP32.0	2							
11	2	119717-32060	O-RING, P15.0	1							
12	2	119624-32040	O-RING, P12.0	1							
13	2	119717-32050	O-RING, P17.0	3							
14	2	119600-11460	GASKET, NOZZLE	6							
15	2	119717-11331	GASKET	1							
16	2	124465-44950	GASKET, 16	2							
17	2	22190-120002	WASHER, SEAL 12	7							
18	2	129901-59560	GASKET	3							
19	2	119717-42020	GASKET, WATER PUMP	1							
20	2	23414-080000	GASKET, 8X1.0	1							
21	2	22190-160002	WASHER, SEAL 16	1							
22	1	129400-92420	HONE	1							1
23	1	977770-1207F	GASKET.LIQUID	1							1

Remarks
(1)Optional parts.

N:Old ◄Yes/No► New. Q:Old ◄No/Yes► New, R:Old ◄Yes/Yes► New, S:Old ◄No/No► New. W:Add. Z:Discontinued. F:Interchangeable by set. K:Q'ty Change

Copyright (C) 2014 YANMAR GLOBAL CS CO., LTD. All RightsReserved.

Parts No. Index

Parts No.	Fig. No.	Ref. No.
101304-59020	14	7
101720-55750	14	24
102103-55520	14	19
103854-39140	14	6
104200-55321	14	15
104200-55330	14	16
104200-55341	14	17
104200-55750	14	25
105010-11490	4	3
105027-12580	5	6
		21
105225-59511	13	35
105311-01090	1	5
105425-01690	3	11
110250-55610	14	20
114110-07761	14	12
114250-39450	9	11
118200-53010	13	2
119025-51520	11	78
119131-18320	6	5
119140-12680	5	8
		23
119226-07900	4	62
119233-12700	5	9
		16
		24
119233-77932	12	121
119285-01990	1	7
119285-11990	4	12
119305-35151	9	17
119336-12570	5	5
		20
119515-12520	5	15
119515-42350	10	17
119515-61440	12	22
119540-12510	5	17
119540-12520	5	2
		17 -1
119540-55651	14	2
119600-11460	4	2
	17	14
119620-01750	3	4
119620-02020	1	8
119620-11280	4	27
119620-14200	7	1
119620-21941	8	15
119620-59700	13	48
119620-77380	16	3
119620-77421	16	6
119620-77440	16	11

Parts No.	Fig. No.	Ref. No.
119620-77461	16	12
119620-77471	16	13
119620-77480	16	18
119620-77490	16	14
119620-79200	16	7
119620-79210	16	8
119620-79220	16	9
119620-79230	16	10
119620-79250	16	5
119620-79260	16	16
119620-79280	16	19
119620-79290	16	20
119620-79300	16	21
119620-79310	16	23
119620-79320	16	24
119620-79330	16	25
119620-79340	16	26
119620-79350	16	27
119620-79360	16	28
119621-21681	8	14
119623-01250	1	6
119624-32040	2	20
	17	12
119636-21580	8	9
119643-66900	16	34
119650-77911	16	36
119650-77930	16	38
119655-12560	5	4
		19
119660-01911	2	19
119660-61901	12	65
119717-01330	17	2
119717-01331	1	28
119717-01501	2	1
119717-01521	2	6
119717-01570	2	3
119717-01601	3	2
119717-01720	3	8
119717-01750	2	18
119717-01800	2	9
119717-02411	1	11
119717-02930	1	24
119717-03031	4	37
119717-03070	4	38
		39
119717-11101	4	14
119717-11110	4	15
119717-11131	4	16
119717-11190	4	18
119717-11200	4	22

Parts No.	Fig. No.	Ref. No.
119717-11240	4	23
119717-11260	4	26
119717-11320	4	48
119717-11331	4	49
	17	15
119717-11340	4	19
	17	4
119717-11350	4	20
	17	8
119717-11381	4	36
119717-11650	4	28
119717-11740	4	4
119717-11800	4	58
119717-13109	6	1
119717-13110	6	2
	17	7
119717-13600	6	3
119717-14400	7	2
119717-14581	7	3
119717-21200	8	5
119717-21650	8	13
119717-21700	8	1
119717-22080	8	16
119717-22090	8	34
119717-22300	8	22
119717-22500	8	18
119717-22550	8	36
119717-23000	8	24
119717-23200	8	28
119717-23601	8	29
119717-23611	8	32
119717-23910	8	31
119717-25050	7	10
119717-25101	7	11
119717-25911	7	14
119717-25930	7	17
119717-32050	2	21
	17	13
119717-32060	9	5
	17	11
119717-32080	2	11
119717-32100	2	10
119717-32110	2	15
119717-32120	2	16
119717-34801	9	1
119717-35080	9	6
119717-35140	9	3
119717-39210	9	12
119717-42020	10	13
	17	19

Parts No.	Fig. No.	Ref. No.
119717-42031	10	3
119717-42041	10	4
119717-44740	10	19
119717-49800	10	23
119717-51030	11	6
119717-51080	11	111
119717-51150	7	18
119717-51420	11	64
119717-51711	11	89
119717-51750	11	90
119717-51761	11	91
119717-51860	11	93
119717-51930	12	2
119717-53001	13	1
119717-53010	13	3
119717-59510	13	36
119717-59810	13	20
119717-59820	13	24
119717-59830	13	28
119717-61050	12	3
119717-61060	12	4
119717-61070	12	5
119717-77801	4	56
119717-77820	4	57
119718-11310	4	47
	17	6
119734-01590	2	4
119734-02220	3	5
119734-77310	16	31
119740-01770	3	10
119740-13100	6	1 -1
119740-42350	10	17 -1
119740-59590	13	47
119740-77020	15	1
119744-59560	13	42
119744-59570	13	44
119761-12020	5	1
119761-12540	5	10
119802-03100	4	40
119802-03110	4	41
119802-03121	4	42
119802-03131	4	43
119802-03141	4	44
119802-13620	6	4
119802-32130	2	17
119802-55801	14	3
		29
		29 -1
119802-77200	16	35
119808-12540	5	3

Parts No. Index

Parts No.	Fig. No.	Ref. No.
119808-12540	5	18
119810-01200	1	27
119810-02941	1	35
119813-59950	13	49
119865-21600	8	12
119934-55611	14	1
		30
119940-77270	16	30
119C10-42320	10	9
119E10-42000	10	1
121111-21501	8	8
121250-44901	10	27
121257-55720	14	21
121257-55731	14	22
121450-42450	10	26
121520-34810	9	2
121850-51960	2	22
	17	3
122710-51090	11	9
123501-79240	16	4
124060-01050	1	12
124064-55510	14	18
124066-59100	13	43
124160-01751	2	30
	4	35
124160-01910	1	13
124465-44950	10	28
		29
	17	16
124574-44761	10	20
124766-59050	13	33
	14	9
129001-32320	2	13
129001-32330	2	14
129005-59830	9	13
129052-77921	16	37
129052-79270	16	17
129100-01580	3	1
	8	2
129100-52200	11	109
129129-77230	15	8
129129-77240	15	9
129129-77260	15	21
129129-77270	15	22
129129-77320	15	28
129129-77340	15	30
129129-77350	15	31
129129-77362	15	32
129129-77380	15	34
129129-77390	15	13

Parts No.	Fig. No.	Ref. No.
129129-77400	15	16
129129-77410	15	17
129129-77430	15	20
129129-77440	15	14
129129-77450	15	15
129129-77460	15	3
129150-11230	4	29
129150-11750	4	31
129150-25301	7	16
129150-59120	13	15
129150-59131	13	18
129155-51020	11	5
		114
129155-51280	11	54
		55
	12	7
129155-51400	11	62
129155-51580	11	86
129155-51701	11	88
129155-52051	11	108
129155-61460	12	77
129155-77925	16	39
129210-59080	14	8
129211-77920	16	40
129240-79300	16	22
129258-42290	10	18
129335-55701	14	14
129350-49530	10	22
129400-92420	17	22
129407-77210	15	6
129407-77220	15	7
129407-77290	15	24
129407-77300	15	25
129407-77330	15	29
129407-77410	15	18
129423-77200	16	1
129423-77710	16	15
129508-11180	4	17
129612-12650	5	7
		22
129612-52100	14	13
129900-32130	2	12
129901-11450	4	1
	17	5
129901-53800	13	4
129901-59560	13	46
	17	18
129916-49740	10	10
129931-59710	13	45
129956-59010	13	32

Parts No.	Fig. No.	Ref. No.
129957-59101	13	34
129972-77341	16	32
129E00-13610	6	4 -1
129E00-13630	6	7
158552-61700	12	60
158552-61900	12	78
158600-51270	11	53
158600-51410	11	63
158600-51420	11	65
158600-51570	11	85
158600-51790	11	92
171056-49120	10	25
171081-55910	14	26
22190-080002	9	14
		16
	17	9
22190-100002	12	80
22190-120002	13	55
	14	11
	17	17
22190-160002	3	14
	11	95
	17	21
22217-120000	11	96
22242-000120	4	32
22252-000220	8	23
22351-050010	11	97
22351-060012	4	21
22372-040000	12	82
22512-040120	8	6
22857-500100	4	50
		51
22857-500160	4	52
23000-054000	5	11
23414-080000	10	14
	17	20
23418-060000	14	27
23857-030000	9	15
23876-005000	4	13
23876-030000	2	8
24311-000320	2	31
	4	53
	17	10
24311-240100	14	28
26013-080222	5	12
26022-050122	11	101
26106-060102	9	10
	12	69
		83
26106-060122	2	23

Parts No.	Fig. No.	Ref. No.
26106-060122	7	9
26106-060142	5	13
	12	84
26106-060162	2	24
26106-060202	4	54
	10	21
	12	85
26106-060352	7	15
26106-060402	2	25
		26
26106-060452	12	86
26106-060602	2	27
26106-060652	2	28
26106-060752	4	55
26106-080122	3	15
	10	15
26106-080162	4	63
	5	14
	14	4
26106-080202	10	24
	16	33
26106-080302	3	16
	14	5
26106-080402	4	34
26106-080452	3	17
26106-080502	3	18
	10	16
26106-100252	15	35
26106-100452	16	29
26206-100252	3	6
26206-100302	3	7
26306-080002	2	29
	6	6
26366-080002	12	70
26577-060122	10	11
26716-120002	11	103
26756-060002	12	87
26979-050162	4	33
27241-120000	1	14
27241-250000	10	12
719717-01561	1	1
719717-02901	1	29
719717-02911	1	32
719717-92730	17	1
719734-01500	2	5
719744-51440	11	1
977770-1207F	17	23
X0280210230	15	11
X0283060061	15	2
X0283270140	15	12

Parts No. Index

Parts No.	Fig. No.	Ref. No.
X0283712350	15	19
X1280996680	15	10
X1534004151	15	27
X4284003310	15	23
X9490561001	16	2
X9490561370	15	4
X9491200240	15	5
X9491730461	15	26

Parts No.	Fig. No.	Ref. No.

Parts No.	Fig. No.	Ref. No.

Parts No.	Fig. No.	Ref. No.