YANMAR

PARTS CATALOG

0CD50-M04570EN

Last update Apr., 2019

PREFACE

This parts catalog is the 1st edition of 3TNV76-UDWN for Wacker Neuson.

Published : April, 2019

Contents

0CD50-M04570

Fig. No.	Fig. Name
ENGINE	
1.	CYLINDER BLOCK
2.	GEAR HOUSING
3.	FLYWHEEL HOUSING & OIL SUMP
4.	CYLINDER HEAD & BONNET
5.	EXHAUST MANIFOLD
6.	CAMSHAFT & DRIVING GEAR
7.	CRANKSHAFT & PISTON
8.	LUB. OIL SYSTEM
9.	COOLING WATER SYSTEM
10.	FUEL INJECTION PUMP
11.	GOVERNOR
12.	FUEL INJECTION VALVE
13.	FUEL PIPE
14.	STARTER MOTOR
15.	GENERATOR
16.	ACCESSORY
17.	GASKET SET

Fig.1. CYLINDER BLOCK

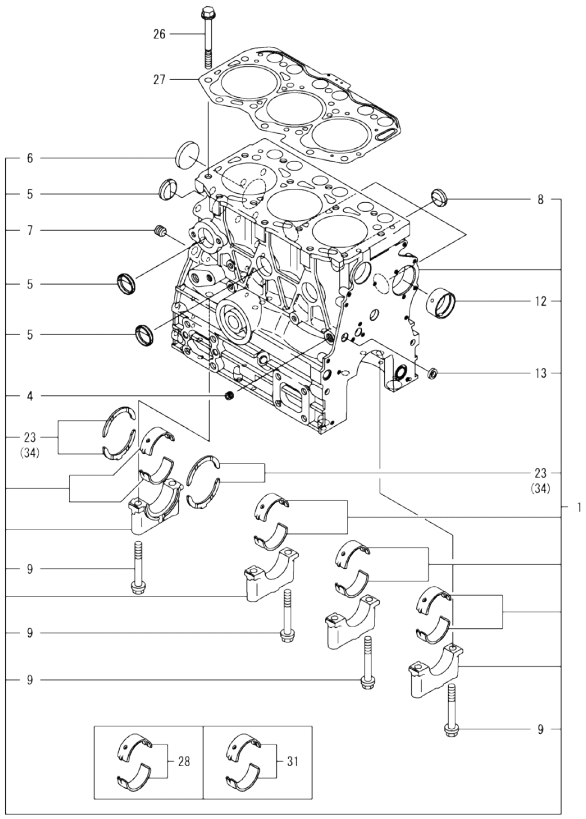

Remarks
(1)Spare parts.
(2)Under-sized(U.S.=0.25) parts.
(3)Over-sized(O.S.=0.25) parts.

(A)=3TNV76-UDWN
(B)=
(C)=
(D)=
(E)=
(F)=

No.	Lev.	Parts No.	Description	Q'ty (A)	(B)	(C)	(D)	(E)	(F)	I	R
1	1	719717-01561	BLOCK ASSY, CYLINDER	1							
4	2	124060-01050	PLUG, PT1/8	1							
5	2	105311-01090	PLUG, 30	4							
6	2	119623-01250	PLUG, 45	1							
7	2	124160-01910	PLUG, PT1/4	1							
8	2	119285-01990	PLUG, 25	3							
9	2	119620-02020	BOLT, METAL CAP	8							
12	2	119717-02411	BUSH, CAMSHAFT	1							
13	2	27241-120000	PLUG, 12	1							
23	2	119717-02930	METAL ASSY, THRUST	2							
26	1	119810-01200	BOLT, CYLINDER HEAD	14							
27	1	119717-01331	GASKET, HEAD	1							
28	1	719717-02901	METAL ASSY, MAIN	4							1
31	1	719717-02911	METAL ASSY, MAIN .25	4							2
34	1	119810-02941	METAL ASSY, 0.25 OS	2							3

N:Old ←Yes/No→ New. Q:Old ←No/Yes→ New. R:Old ←Yes/Yes→ New. S:Old ←No/No→ New. W:Add. Z:Discontinued. F:Interchangeable by set. K:Q'ty Change

Copyright (C) 2019 YANMAR CO., LTD. All RightsReserved.

Fig.2. GEAR HOUSING

(A)=3TNV76-UDWN
(B)=
(C)=
(D)=
(E)=
(F)=

No.	Lev.	Parts No.	Description	Q'ty (A)	(B)	(C)	(D)	(E)	(F)	I	R
1	1	119717-01501	CASE, GEAR	1							
2	1	119717-01570	STUD	3							
3	1	119734-01590	COVER ASSY, CASE	1							
4	2	719734-01500	COVER ASSY, CASE	1							
5	3	119717-01521	COVER, GEAR CASE	1							
6	4	23876-030000	PLUG, R03	2							
7	3	119717-01800	SEAL, OIL	1							
8	2	119717-32100	COVER ASSY, PUMP	1							
9	3	119717-32080	COVER, OIL PUMP	1							
10	3	129900-32130	VALVE, RELIEF	1							
11	3	129001-32320	SPRING	1							
12	3	129001-32330	PLUG	1							
13	2	119717-32110	ROTOR, INNER	1							
14	2	119717-32120	ROTOR, OUTER	1							
15	2	119802-32130	SCREW, M6X16	8							
16	1	119717-01750	COVER, PUMP	1							
17	1	119660-01911	PIPE, KNOCK 6X17	4							
18	1	119624-32040	O-RING, P12.0	1							
19	1	119717-32050	O-RING, P17.0	3							
20	1	121850-51960	O-RING, FUEL PUMP	1							
21	1	26106-060122	BOLT, M6X 12 PLATED	1							
22	1	26106-060162	BOLT, M6X 16 PLATED	4							
23	1	26106-060402	BOLT, M6X 40 PLATED	4							
24	1	26106-060402	BOLT, M6X 40 PLATED	3							
25	1	26106-060602	BOLT, M6X 60 PLATED	7							
26	1	26106-060652	BOLT, M6X 65 PLATED	2							
27	1	26306-080002	NUT, M8	3							
28	1	124160-01751	CAP, FILLER	1							
29	1	24311-000320	O-RING, 1AP32.0	1							
30	1	171031-11741	PIPE, FILLER	1							
31	1	24311-000320	O-RING, 1AP32.0	1							

N:Old ←Yes/No→ New. Q:Old ←No/Yes→ New. R:Old ←Yes/Yes→ New. S:Old ←No/No→ New. W:Add. Z:Discontinued. F:Interchangeable by set. K:Q'ty Change

Copyright (C) 2019 YANMAR CO., LTD. All RightsReserved.

Fig.3. FLYWHEEL HOUSING & OIL SUMP

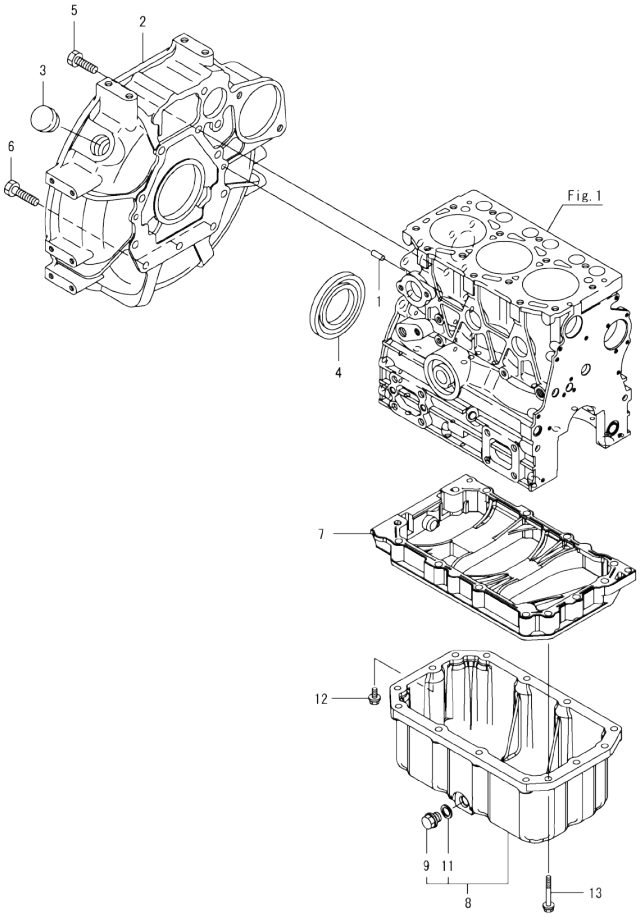

(A)=3TNV76-UDWN (D)=
(B)= (E)=
(C)= (F)=

No.	Lev.	Parts No.	Description	Q'ty (A)	(B)	(C)	(D)	(E)	(F)	I	R
1	1	129100-01580	PIN, PARALLEL 8X16	2							
2	1	119717-01601	HOUSING, FLYWHEEL	1							
3	1	119620-01750	CAP, WHEEL COVER	1							
4	1	124085-02220	SEAL, METAL HOUSING	1							
5	1	26206-100252	BOLT, M10X 25 PLATED	8							
6	1	26206-100302	BOLT, M10X 30 PLATED	3							
7	1	119717-01720	SPACER, OIL PAN	1							
8	1	119746-01790	OIL PAN ASSY	1							
9	2	105425-01690	PLUG, DRAIN M16	1							
11	2	22190-160002	WASHER, SEAL 16	1							
12	1	26106-080252	BOLT, M8X 25 PLATED	1							
13	1	26106-080602	BOLT, M8X 60 PLATED	13							

N:Old ←Yes/No→ New. Q:Old ←No/Yes→ New. R:Old ←Yes/Yes→ New. S:Old ←No/No→ New. W:Add. Z:Discontinued. F:Interchangeable by set. K:Q'ty Change

Copyright (C) 2019 YANMAR CO., LTD. All RightsReserved.

Fig.4. CYLINDER HEAD & BONNET

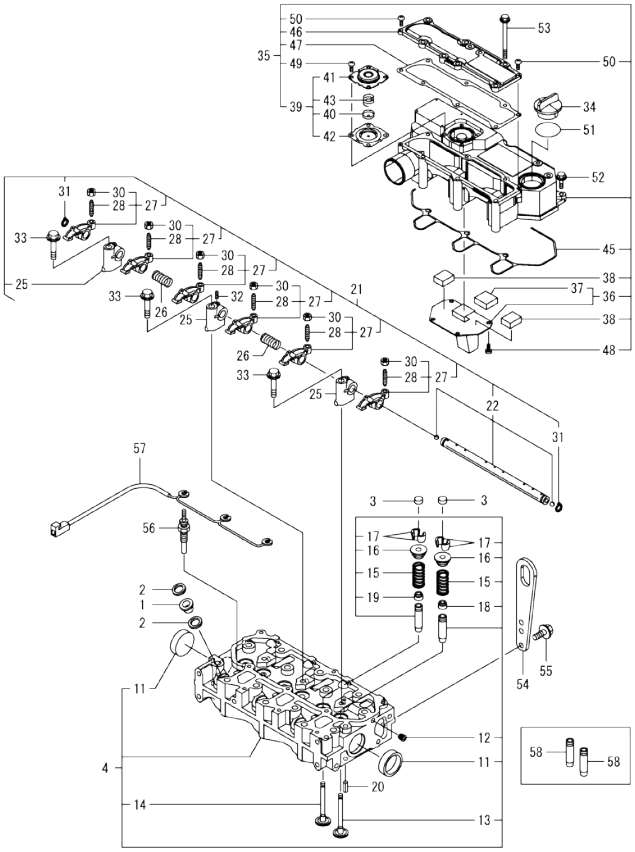

(A)=3TNV76-UDWN
(B)=
(C)=
(D)=
(E)=
(F)=

No.	Lev.	Parts No.	Description	Q'ty (A)	(B)	(C)	(D)	(E)	(F)	I	R
1	1	129901-11450	PROTECTOR, NOZZLE	3							
2	1	119600-11460	GASKET, NOZZLE	6							
3	1	105010-11490	CAP, VALVE	6							
4	1	119717-11740	HEAD ASSY, CYLINDER	1							
11	2	119285-11990	PLUG, 35	2							
12	2	23876-005000	PLUG, R005	1							
13	2	119717-11101	VALVE, INTAKE	3							
14	2	119717-11110	VALVE, EXHAUST	3							
15	2	119717-11131	SPRING, VALVE	6							
16	2	129508-11180	RETAINER, SPRING	6							
17	2	119717-11190	COTTER, VALVE	12							
18	2	119717-11340	SEAL, VALVE STEM	3							
19	2	119717-11350	SEAL, VALVE STEM	3							
20	1	22351-060012	PIN, SPRING 6.0X12	2							
21	1	119717-11200	SUPPORT ASSY, ROCKER	1							
22	2	119717-11240	SHAFT ASSY, ARM	1							
25	2	119717-11260	SUPPORT, ROCKER ARM	3							
26	2	119620-11280	SPRING, SHAFT	2							
27	2	119717-11650	ARM ASSY, ROCKER INT	6							
28	3	129150-11230	SCREW, VALVE ADJUST	6							
30	3	129150-11750	NUT, M8XP1.0	6							
31	2	22242-000120	RING, 12	2							
32	2	26979-050162	SCREW, M5X16	1							
33	1	26106-080402	BOLT, M8X 40 PLATED	3							
34	1	124160-01751	CAP, FILLER	1							
35	1	119717-11381	BONNET ASSY, HEAD	1							
36	2	119717-03031	PLATE, BAFFLE	1							
37	3	119717-03070	BAFFLE, BREATHER	1							
38	2	119717-03070	BAFFLE, BREATHER	2							
39	2	119802-03100	DIAPHRAGM ASSY	1							
40	3	119802-03110	PLATE, DIAPHRAGM	1							
41	3	119802-03121	COVER, DIAPHRAGM	1							
42	3	119802-03131	DIAPHRAGM, BREATHER	1							
43	3	119802-03141	SPRING, DIAPHRAGM	1							
45	2	119718-11310	GASKET, BONNET	1							
46	2	119717-11320	COVER, BONNET	1							
47	2	119717-11331	GASKET, BONNET COVER	1							
48	2	22857-500100	SCREW, 5X10	4							
49	2	22857-500100	SCREW, 5X10	4							
50	2	22857-500160	SCREW, 5X16	2							
51	1	24311-000320	O-RING, 1AP32.0	1							
52	1	26106-060202	BOLT, M6X 20 PLATED	3							
53	1	26106-060752	BOLT, M6X 75 PLATED	6							
54	1	129900-07900	LIFTER, ENGINE	1							
55	1	26106-080162	BOLT, M8X 16 PLATED	2							
56	1	119717-77801	PLUG, GLOW	3							
57	1	119717-77820	CONNECTOR, GLOW PLUG	1							
58	1	119717-11800	GUIDE, VALVE	6							1

Remarks
(1)Spare parts.

N:Old ←Yes/No→ New. Q:Old ←No/Yes→ New. R:Old ←Yes/Yes→ New. S:Old ←No/No→ New. W:Add. Z:Discontinued. F:Interchangeable by set. K:Q'ty Change

Copyright (C) 2019 YANMAR CO., LTD. All RightsReserved.

Fig.5. EXHAUST MANIFOLD

(A)=3TNV76-UDWN (D)=
(B)= (E)=
(C)= (F)=

No.	Lev.	Parts No.	Description	Q'ty (A)	(B)	(C)	(D)	(E)	(F)	I	R
1	1	119718-13100	MANIFOLD, EXHAUST	1							
2	1	119717-13110	GASKET, MANIFOLD	1							
3	1	119717-13600	STUD, M8X50	2							
4	1	129E00-13610	BOLT, M8X50 10.9	4							
5	1	119131-18320	STUD, M8X22	4							
6	1	26306-080002	NUT, M8	2							

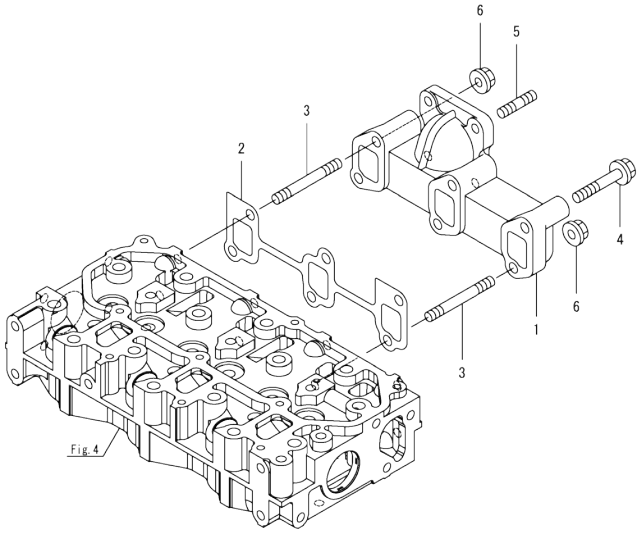

N:Old $\frac{\text{Yes}}{\text{No}}$ New. Q:Old $\frac{\text{No}}{\text{Yes}}$ New. R:Old $\frac{\text{Yes}}{\text{Yes}}$ New. S:Old $\frac{\text{No}}{\text{No}}$ New. W:Add. Z:Discontinued. F:Interchangeable by set. K:Q'ty Change

Copyright (C) 2019 YANMAR CO., LTD. All RightsReserved.

Fig.6. CAMSHAFT & DRIVING GEAR

(A)=3TNV76-UDWN (D)=
(B)= (E)=
(C)= (F)=

No.	Lev.	Parts No.	Description	Q'ty (A)	(B)	(C)	(D)	(E)	(F)	I	R
1	1	119620-14200	TAPPET	6							
2	1	119717-14400	ROD, PUSH	6							
3	1	119717-14581	CAMSHAFT ASSY	1							
8	1	26106-060122	BOLT, M6X 12 PLATED	2							
9	1	119717-25050	SHAFT, IDLE GEAR	1							
10	1	119717-25101	GEAR ASSY, IDLE	1							
13	1	26106-060352	BOLT, M6X 35 PLATED	3							
14	1	129150-25301	BOLT, INJECTION PUMP	4							
15	1	119717-25930	GEAR, PUMP	1							
16	1	119717-25911	BUSH, IDLE GEAR	1							1
17	1	119717-51150	FLANGE, CAMSHAFT	1							

Remarks
(1)Spare parts.

N:Old $\frac{\text{Yes}}{\text{No}}$ New. Q:Old $\frac{\text{No}}{\text{Yes}}$ New. R:Old $\frac{\text{Yes}}{\text{Yes}}$ New. S:Old $\frac{\text{No}}{\text{No}}$ New. W:Add. Z:Discontinued. F:Interchangeable by set. K:Q'ty Change

Copyright (C) 2019 YANMAR CO., LTD. All RightsReserved.

Fig.7. CRANKSHAFT & PISTON

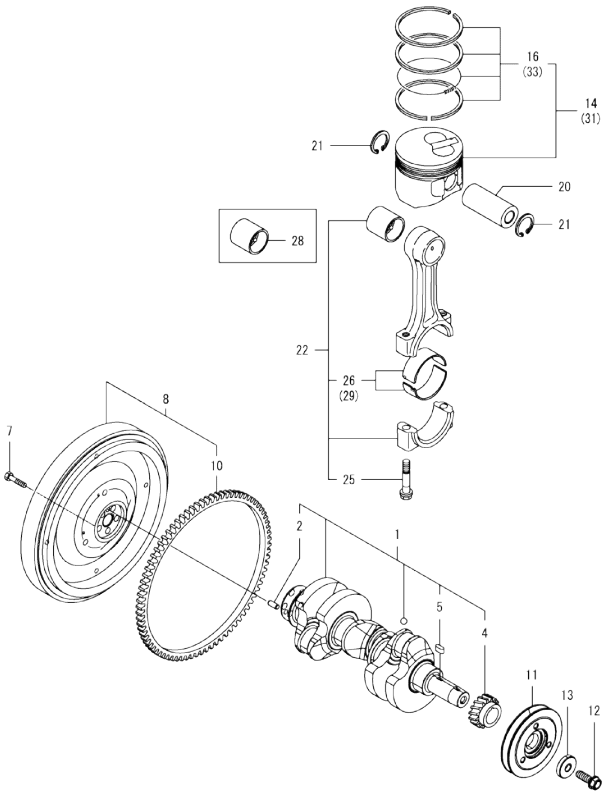

(A)=3TNV76-UDWN (D)=
(B)= (E)=
(C)= (F)=

No.	Lev.	Parts No.	Description	Q'ty (A)	(B)	(C)	(D)	(E)	(F)	I	R
1	1	119717-21700	CRANKSHAFT ASSY	1							
2	2	129100-01580	PIN, PARALLEL 8X16	1							
4	2	119717-21200	GEAR, CRANKSHAFT	1							
5	2	22512-040120	KEY, 4X 12	1							
7	1	119620-21500	BOLT, FLYWHEEL	5							
8	1	119740-21590	FLYWHEEL ASSY	1							
10	2	119865-21600	GEAR, RING Z=116	1							
11	1	119515-21650	V-PULLEY, CRANKSHAFT	1							
12	1	119621-21681	BOLT, FLANGE 12X1.25	1							
13	1	119620-21941	WASHER, 12	1							
14	1	119717-22080	PISTON ASSY	3							
16	2	119717-22500	RING SET, PISTON	3							
20	1	119717-22300	PIN, PISTON	3							
21	1	22252-000220	RING, 22	6							
22	1	119717-23001	ROD ASSY, CONNECTING	3							
25	2	119717-23200	BOLT, CONNECTING ROD	6							
26	2	119717-23601	METAL ASSY,CRANK PIN	3							
28	1	119717-23911	BUSH, PISTON PIN	3							1
29	1	119717-23611	METAL ASSY, PIN .25	3							2
31	1	119717-22090	PISTON ASSY, 0.25 OS	3							3
33	2	119717-22550	RING SET, PISTON .25	3							3

Remarks
(1)Spare parts.
(2)Under-sized(U.S.=0.25) parts.
(3)Over-sized(O.S.=0.25) parts.

N:Old ←Yes/No→ New. Q:Old ←No/Yes→ New, R:Old ←Yes/Yes→ New, S:Old ←No/No→ New, W:Add, Z:Discontinued, F:Interchangeable by set, K:Q'ty Change

Copyright (C) 2019 YANMAR CO., LTD. All RightsReserved.

Fig.8. LUB. OIL SYSTEM

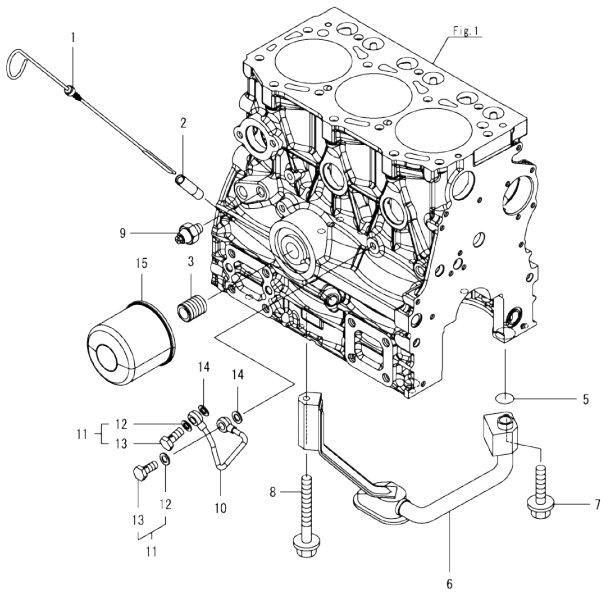

(A)=3TNV76-UDWN
(B)=
(C)=
(D)=
(E)=
(F)=

No.	Lev.	Parts No.	Description	Q'ty (A)	(B)	(C)	(D)	(E)	(F)	I	R
1	1	119746-34801	DIPSTICK, OIL	1							
2	1	121520-34810	GUIDE, DIPSTICK	1							
3	1	119717-35140	STUD	1							
5	1	119717-32060	O-RING, P15.0	1							
6	1	119744-35070	PIPE ASSY, OIL INLET	1							
7	1	26106-060352	BOLT, M6X 35 PLATED	1							
8	1	26106-060652	BOLT, M6X 65 PLATED	1							
9	1	121252-39450	SWITCH, HYDRAULIC	1							
10	1	119717-39210	PIPE, PUMP	1							
11	1	129005-59830	BOLT ASSY, JOINT M8	2							
12	2	22190-080002	WASHER, SEAL 8	2							
13	2	23857-030000	BOLT, JOINT 3	2							
14	1	22190-080002	WASHER, SEAL 8	2							
15	1	119305-35151	FILTER ASSY, D68XL65	1							1

Remarks
(1)Spare parts.

N:Old $\frac{\text{Yes}}{\text{No}}$ New. Q:Old $\frac{\text{No}}{\text{Yes}}$ New. R:Old $\frac{\text{Yes}}{\text{Yes}}$ New. S:Old $\frac{\text{No}}{\text{No}}$ New. W:Add. Z:Discontinued. F:Interchangeable by set. K:Q'ty Change

Copyright (C) 2019 YANMAR CO., LTD. All RightsReserved.

Fig.9. COOLING WATER SYSTEM

(A)=3TNV76-UDWN
(B)=
(C)=
(D)=
(E)=
(F)=

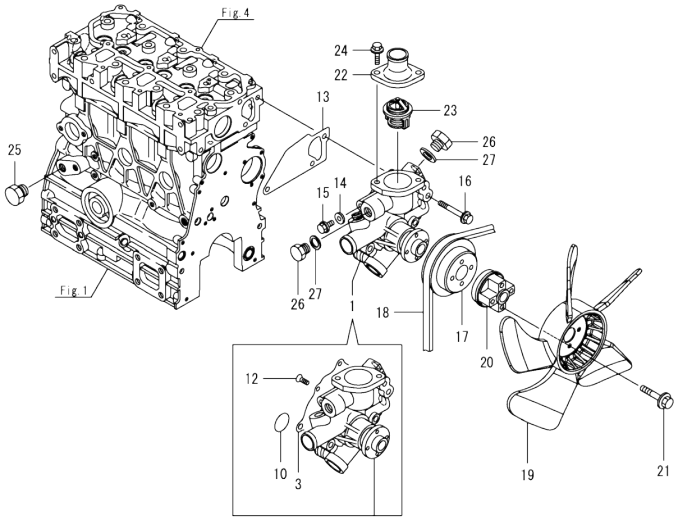

No.	Lev.	Parts No.	Description	Q'ty (A)	(B)	(C)	(D)	(E)	(F)	I	R
1	1	119717-42003	PUMP ASSY, CW	1							
3	2	119717-42031	GASKET, WATER PUMP	1							
10	2	119717-42320	O-RING, P26	1							
12	2	26577-060122	SCREW, M6X12	4							
13	1	119717-42020	GASKET, WATER PUMP	1							
14	1	23414-080000	GASKET, 8X1.0	1							
15	1	26106-080122	BOLT, M8X 12 PLATED	1							
16	1	26106-080502	BOLT, M8X 50 PLATED	3							
17	1	119027-42350	V-PULLEY, PUMP	1							
18	1	25152-003700	V-BELT, A37	1							
19	1	119233-44740	FAN, COOLING D290XUH	1							
20	1	129030-44760	SPACER, FAN L38.5	1							
21	1	26106-060502	BOLT, M6X 50 PLATED	4							
22	1	129350-49530	COVER, THERMOSTAT	1							
23	1	119718-49800	THERMOSTAT, 82C	1							
24	1	26106-080202	BOLT, M8X 20 PLATED	2							
25	1	171056-49120	PLUG, DRAIN R1/4	1							
26	1	121450-42450	PLUG, M16	2							
27	1	124465-44950	GASKET, 16	2							

N:Old ←Yes/No→ New. Q:Old ←No/Yes→ New. R:Old ←Yes/Yes→ New. S:Old ←No/No→ New. W:Add. Z:Discontinued. F:Interchangeable by set. K:Q'ty Change

Copyright (C) 2019 YANMAR CO., LTD. All RightsReserved.

Fig.10. FUEL INJECTION PUMP

(A)=3TNV76-UDWN
(B)=
(C)=
(D)=
(E)=
(F)=

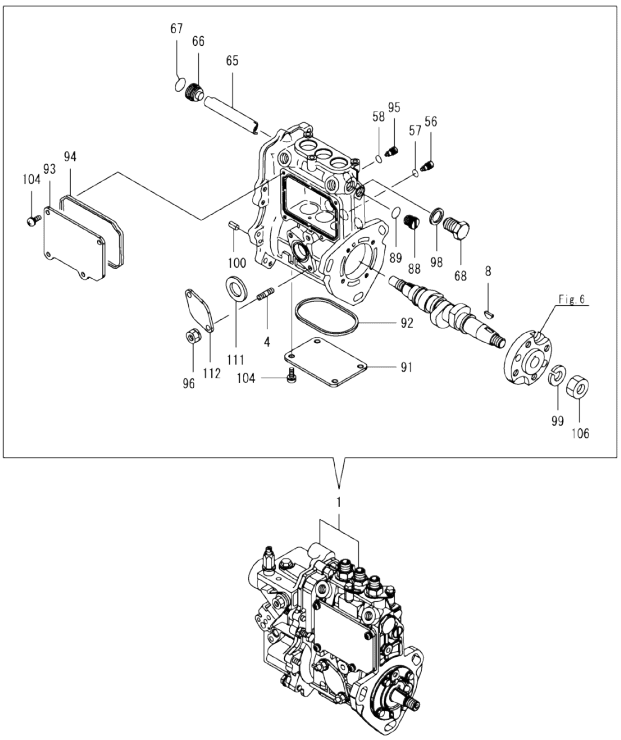

No.	Lev.	Parts No.	Description	Q'ty (A)	(B)	(C)	(D)	(E)	(F)	I	R
1	1	719745-51320	FIE ASSY	1							1
4	2	129155-51020	STUD	2							
8	2	122710-51090	KEY, FEATHER	1							
56	2	158600-51270	STOPPER, TAPPET	3							
57	2	129155-51280	O-RING, S6	3							
58	2	129155-51280	O-RING, S6	1							
65	2	129155-51400	PROTECTOR	1							
66	2	158600-51410	PLUG, DEFLIFTER M12	1							
67	2	119717-51420	O-RING	1							
68	2	158600-51420	PLUG, DEFLIFTER M16	1							
88	2	158600-51570	PLUG, RACK	1							
89	2	129155-51580	O-RING	1							
91	2	129155-51701	COVER, PUMP BOTTOM	1							
92	2	119717-51711	GASKET, PUMP	1							
93	2	119717-51750	COVER, BODY SIDE	1							
94	2	119717-51761	GASKET, PUMP COVER	1							
95	2	158600-51790	STOPPER, RACK	1							
96	2	119717-51860	NUT, M6	2							
98	2	22190-160002	WASHER, SEAL 16	1							
99	2	22217-120000	WASHER, SPRING 12	1							
100	2	22351-050010	PIN, SPRING 5.0X10	2							
104	2	26022-050122	SCREW, M5X12	8							
106	2	26716-120002	NUT, M12	1							
111	2	129155-52051	GASKET, PUMP COVER	1							
112	2	129100-52200	COVER, FEED PUMP	1							

Remarks
(1)Governor(Fig.11) is incorporated in this Fuel Injection Pump(No.1).

N:Old ←Yes/No→ New. Q:Old ←No/Yes→ New. R:Old ←Yes/Yes→ New. S:Old ←No/No→ New. W:Add. Z:Discontinued. F:Interchangeable by set. K:Q'ty Change

Copyright (C) 2019 YANMAR CO., LTD. All RightsReserved.

Fig.11. GOVERNOR

(A)=3TNV76-UDWN
(B)=
(C)=
(D)=
(E)=
(F)=

No.	Lev.	Parts No.	Description	Q'ty (A)	(B)	(C)	(D)	(E)	(F)	I	R
2	2	119717-51930	PLUG, M10	1							
3	2	119717-61050	GASKET, CASE	1							
4	2	119717-61060	COVER, GOVERNOR CASE	1							
5	2	119717-61070	GASKET, COVER	1							
7	2	129155-51280	O-RING, S6	1							
22	2	119515-61440	LEVER, CONTROL	1							
60	2	158552-61700	SHIM SET	1							
65	2	119660-61901	STOPPER, SHAFT	1							
69	2	26106-060102	BOLT, M6X 10 PLATED	1							
70	2	26366-080002	NUT, M8	1							
77	2	129155-61461	BOLT,IDLE LIMIT	1							
78	2	119740-61470	NUT	1							
79	2	158552-61900	O-RING	1							
81	2	22190-100002	WASHER, SEAL 10	1							
83	2	22372-040000	PIN, SNAP 4	1							
84	2	26106-060102	BOLT, M6X 10 PLATED	4							
85	2	26106-060142	BOLT, M6X 14 PLATED	2							
86	2	26106-060202	BOLT, M6X 20 PLATED	4							
87	2	26106-060452	BOLT, M6X 45 PLATED	3							
121	2	129630-77900	SOLENOID, STOP	1							

Remarks
* This figure(Governor) is incorporated in the Fuel Injection Pump(Fig.10).

N:Old ◄Yes/No► New. Q:Old ◄No/Yes► New. R:Old ◄Yes/Yes► New. S:Old ◄No/No► New. W:Add. Z:Discontinued. F:Interchangeable by set. K:Q'ty Change

Copyright (C) 2019 YANMAR CO., LTD. All RightsReserved.

Fig.12. FUEL INJECTION VALVE

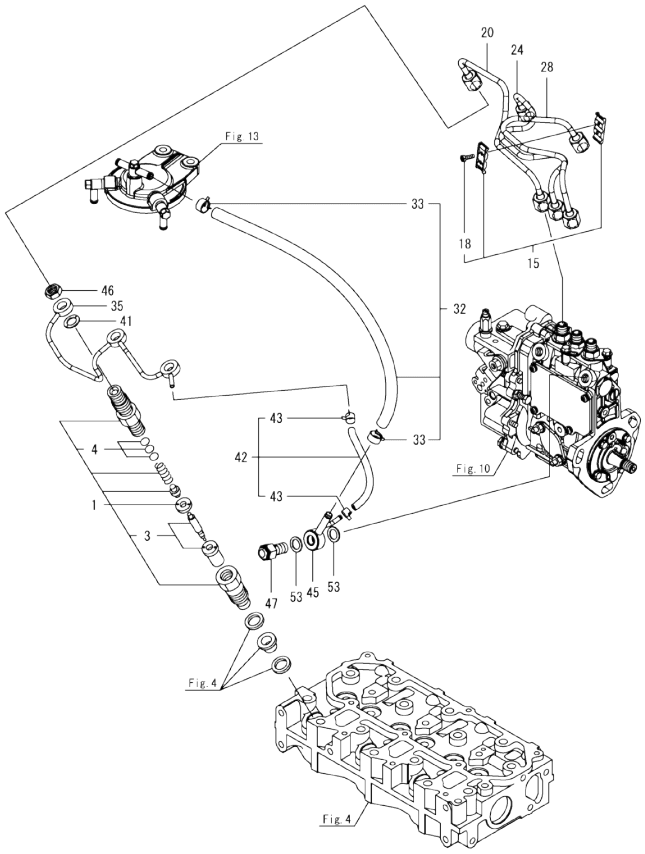

(A)=3TNV76-UDWN
(B)=
(C)=
(D)=
(E)=
(F)=

No.	Lev.	Parts No.	Description	Q'ty (A)	(B)	(C)	(D)	(E)	(F)	I	R
1	1	119717-53001	VALVE ASSY,INJECTION	3							
3	2	119717-53010	VALVE ASSY,INJECTION	3							
4	2	129901-53800	SHIM SET, ADJUSTING	3							1
15	1	129150-59120	RETAINER, PIPE	1							
18	2	129150-59131	BOLT, M4X14	2							
20	1	119717-59810	PIPE, INJECTION NO.1	1							
24	1	119717-59820	PIPE, INJECTION NO.2	1							
28	1	119717-59830	PIPE, INJECTION NO.3	1							
32	1	129210-59170	HOSE ASSY, FUEL L440	1							
33	2	124766-59050	CLAMP, HOSE 11.5	2							
35	1	119717-59510	PIPE ASSY, RETURN	1							
41	1	129901-59560	GASKET, FUEL RETURN	3							
42	1	119540-59570	HOSE ASSY, RETURN	1							
43	2	124066-59100	CLAMP, HOSE 8	2							
45	1	119840-59570	JOINT, OVERFLOW	1							
46	1	119620-59700	NUT, NOZZLE RETURN	3							
47	1	119813-59950	VALVE ASSY, CHECK	1							
53	1	22190-120002	WASHER, SEAL 12	2							

Remarks
(1)Spare parts.

N:Old ◄Yes/No► New. Q:Old ◄No/Yes► New. R:Old ◄Yes/Yes► New. S:Old ◄No/No► New. W:Add. Z:Discontinued. F:Interchangeable by set. K:Q'ty Change

Copyright (C) 2019 YANMAR CO., LTD. All RightsReserved.

Fig.13. FUEL PIPE

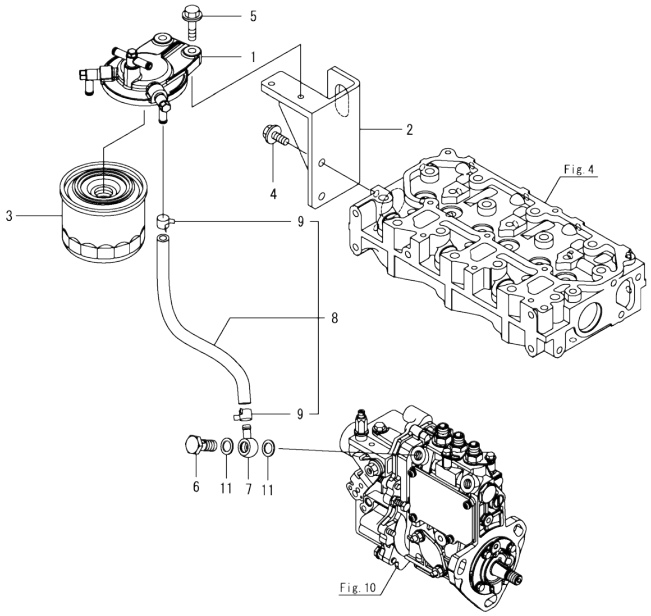

(A)=3TNV76-UDWN
(B)=
(C)=
(D)=
(E)=
(F)=

No.	Lev.	Parts No.	Description	Q'ty (A)	(B)	(C)	(D)	(E)	(F)	I	R
1	1	119934-55611	BRACKET, FILTER	1							
2	1	119540-55651	BRACKET, FILTER	1							
3	1	119802-55801	FILTER, FUEL	1							
4	1	26106-080162	BOLT, M8X 16 PLATED	2							
5	1	26106-080302	BOLT, M8X 30 PLATED	2							
6	1	103854-39140	BOLT, PIPE JOINT	1							
7	1	101304-59020	JOINT, PIPE 12	1							
8	1	129210-59080	HOSE ASSY, FUEL L270	1							
9	2	124766-59050	CLAMP, HOSE 11.5	2							
11	1	22190-120002	WASHER, SEAL 12	2							

N:Old ←Yes/No→ New. Q:Old ←No/Yes→ New. R:Old ←Yes/Yes→ New. S:Old ←No/No→ New. W:Add. Z:Discontinued. F:Interchangeable by set. K:Q'ty Change

Copyright (C) 2019 YANMAR CO., LTD. All RightsReserved.

Fig.14. STARTER MOTOR

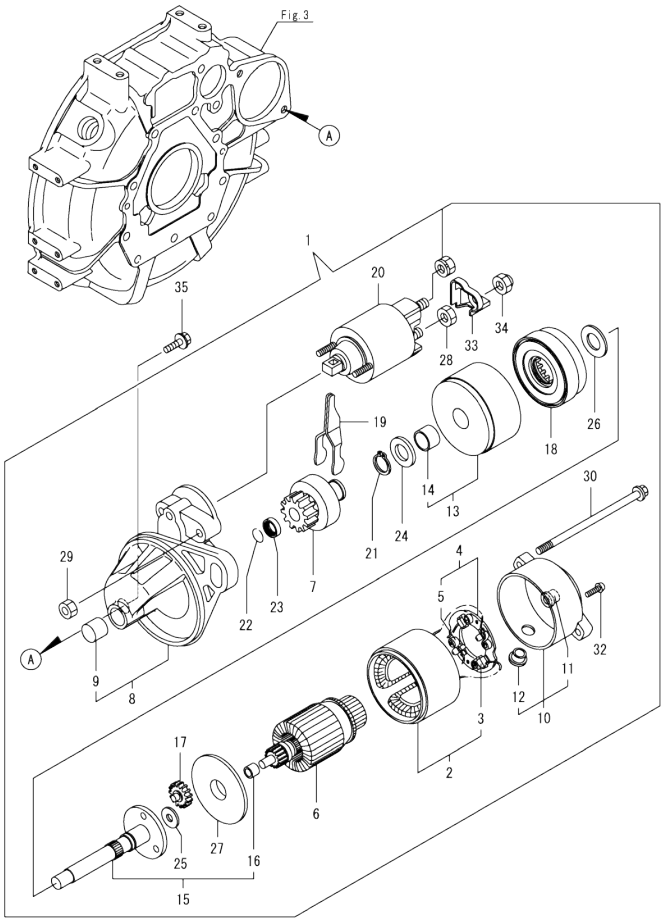

0CD50-M04570 Fig.14

(A)=3TNV76-UDWN
(B)=
(C)=
(D)=
(E)=
(F)=

No.	Lev.	Parts No.	Description	Q'ty (A)	(B)	(C)	(D)	(E)	(F)	I	R
1	1	119717-77010	STARTER, P1.1	1							
2	2	X0281007750	YOKE ASSY	1							
3	3	X0280996180	STARTER KIT	2							
4	2	X0285105190	HOLDER ASSY	1							
5	3	X0285205030	SPRING	4							
6	2	X0282005991	ARMATURE ASSY	1							
7	2	X0283006960	CLUTCH	1							
8	2	X4284001590	HOUSING ASSY	1							
9	3	X9491050100	BEARING, NEEDLE	1							
10	2	X0285007030	FRAME ASSY	1							
11	3	X9491040990	BEARING	1							
12	3	X0280626010	COVER	1							
13	2	X0284105040	BEARING ASSY, SUB	1							
14	3	X9491034330	BEARING	1							
15	2	X0286105010	SHAFT ASSY, SUB	1							
16	3	X9491034320	BEARING	1							
17	2	X0286305010	GEAR	3							
18	2	X0286355010	GEAR	1							
19	2	X0287405140	LEVER	1							
20	2	X2534000090	SWITCH ASSY	1							
21	2	X9055715000	RING	1							
22	2	X9490721360	RING	1							
23	2	X0280210331	NUT	1							
24	2	X9490138110	WASHER	1							
25	2	X9490138090	WASHER	1							
26	2	X9490138100	WASHER	1							
27	2	X0284525010	PLATE	1							
28	2	X9490562360	NUT	1							
29	2	X9490560750	NUT	2							
30	2	X9490423420	BOLT, THROUGH	2							
32	2	X9490065670	SCREW, M4X6	2							
33	2	X1280330020	COVER, TERMINAL	1							
34	2	X1289510130	NUT	1							
35	1	26106-100252	BOLT, M10X 25 PLATED	2							

N:Old ←Yes/No→ New. Q:Old ←No/Yes→ New. R:Old ←Yes/Yes→ New. S:Old ←No/No→ New. W:Add. Z:Discontinued. F:Interchangeable by set. K:Q'ty Change

Copyright (C) 2019 YANMAR CO., LTD. All RightsReserved.

Fig.15. GENERATOR

(A)=3TNV76-UDWN (D)=
(B)= (E)=
(C)= (F)=

No.	Lev.	Parts No.	Description	Q'ty (A)	(B)	(C)	(D)	(E)	(F)	I	R
1	1	119626-77220	ALTERNATOR, 12V-55A	1							
2	2	X9490561001	NUT	1							
3	2	129052-77380	ROTOR ASSY	1							
4	3	123501-79240	BEARING, BALL	1							
5	3	119620-79250	COVER, BEARING	1							
6	2	129052-77422	FRAME ASSY	1							
7	3	119620-79200	BEARING, BALL	1							
8	3	119620-79210	PLATE, RETAINER	1							
9	3	119620-79220	SCREW	4							
10	3	119620-79230	STUD	2							
11	2	128401-77440	COVER, END	1							
12	2	119626-77450	COVER, END	1							
13	2	119620-77461	PULLEY, GENERATOR	1							
14	2	119620-77471	NUT	1							
15	2	119620-77490	COLLAR	1							
16	2	129423-77720	REGULATOR ASSY	1							
17	2	129052-79260	HOLDER ASSY	1							
18	2	129052-79270	HOLDER ASSY, BRUSH	1							
19	2	119620-79290	SCREW	6							
20	2	119620-79300	SCREW	1							
21	2	119620-79310	BOLT	3							
22	2	119620-79320	SCREW, W/WASHER	2							
23	2	119620-79330	BOLT	2							
24	2	119620-79340	BUSH, INSULATION	1							
25	2	119620-79350	NUT	2							
26	1	26106-100502	BOLT, M10X 50 PLATED	1							
27	1	119940-77270	SPACER, GENERATOR	1							
28	1	119717-77340	ADJUSTER, BELT	1							
29	1	129972-77341	BOLT, ADJUSTER L=50	1							
30	1	26106-080202	BOLT, M8X 20 PLATED	1							

N:Old ←Yes/No→ New. Q:Old ←No/Yes→ New. R:Old ←Yes/Yes→ New. S:Old ←No/No→ New. W:Add. Z:Discontinued. F:Interchangeable by set. K:Q'ty Change

Copyright (C) 2019 YANMAR CO., LTD. All RightsReserved.

Fig.16. ACCESSORY

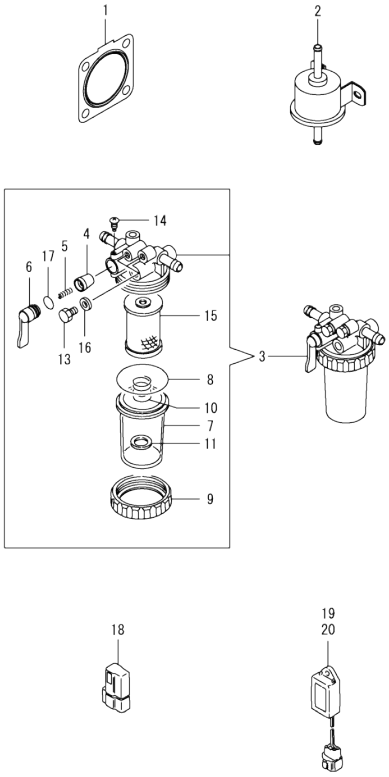

(A)=3TNV76-UDWN (D)=
(B)= (E)=
(C)= (F)=

No.	Lev.	Parts No.	Description	Q'ty (A)	(B)	(C)	(D)	(E)	(F)	I	R
1	1	119515-13200	GASKET, SILENCER	1							
2	1	129612-52100	PUMP, FUEL FEED	1							
3	1	121257-55700	SEPARATOR ASSY,WATER	1							
4	2	104200-55321	VALVE, TAPER	1							
5	2	104200-55330	SPRING, FUEL VALVE	1							
6	2	104200-55341	HANDLE, COCK	1							
7	2	121254-55510	CUP, FUEL STARINER	1							
8	2	102103-55520	O-RING, FILTER	1							
9	2	110250-55610	RING, CUP RETAINING	1							
10	2	121257-55720	SPRING, ELEMENT	1							
11	2	121257-55731	FLOAT	1							
13	2	101720-55750	PLUG, HEXAGON M6	2							
14	2	104200-55750	SCREW, M4	1							
15	2	171081-55910	FILTER, FUEL 100M	1							
16	2	23418-060000	GASKET, 6X1.0	2							
17	2	24311-240100	O-RING, 1AP10A	1							
18	1	119643-66900	DIODE	1							
19	1	129155-77925	TIMER, SECTION 4	1							
20	1	129211-77920	TIMER, SECTION 1	1							

N:Old ←Yes/No→ New. Q:Old ←No/Yes→ New. R:Old ←Yes/Yes→ New. S:Old ←No/No→ New. W:Add. Z:Discontinued. F:Interchangeable by set. K:Q'ty Change

Copyright (C) 2019 YANMAR CO., LTD. All RightsReserved.

Fig.17. GASKET SET

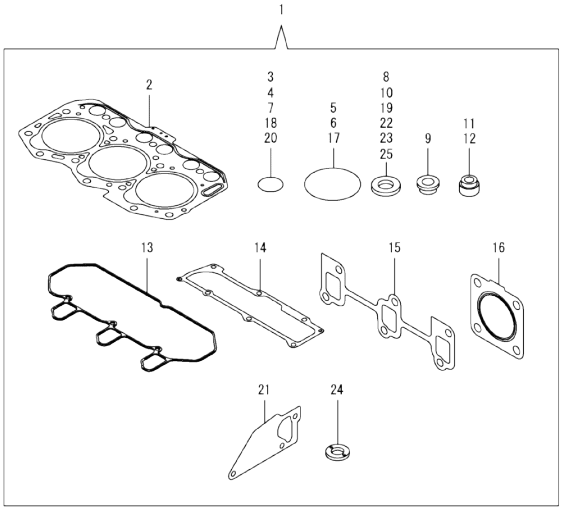

(A)=3TNV76-UDWN
(B)=
(C)=
(D)=
(E)=
(F)=

No.	Lev.	Parts No.	Description	Q'ty (A)	(B)	(C)	(D)	(E)	(F)	I	R
1	1	119747-92600	GASKET SET	1							1
2	2	119717-01331	GASKET, HEAD	1							
3	2	119624-32040	O-RING, P12.0	1							
4	2	119717-32050	O-RING, P17.0	3							
5	2	121850-51960	O-RING, FUEL PUMP	1							
6	2	24311-000320	O-RING, 1AP32.0	2							
7	2	24341-000240	O-RING, 1AS24.0	1							
8	2	22190-160002	WASHER, SEAL 16	1							
9	2	129901-11450	PROTECTOR, NOZZLE	3							
10	2	119600-11460	GASKET, NOZZLE	6							
11	2	119717-11340	SEAL, VALVE STEM	3							
12	2	119717-11350	SEAL, VALVE STEM	3							
13	2	119718-11310	GASKET, BONNET	1							
14	2	119717-11331	GASKET, BONNET COVER	1							
15	2	119717-13110	GASKET, MANIFOLD	1							
16	2	119515-13200	GASKET, SILENCER	1							
17	2	124450-35110	O-RING, OIL FILTER	1							
18	2	119717-32060	O-RING, P15.0	1							
19	2	22190-080002	WASHER, SEAL 8	4							
20	2	119C10-42320	O-RING, 2028	1							
21	2	119717-42020	GASKET, WATER PUMP	1							
22	2	23414-080000	GASKET, 8X1.0	1							
23	2	124465-44950	GASKET, 16	2							
24	2	129901-59560	GASKET, FUEL RETURN	3							
25	2	22190-120002	WASHER, SEAL 12	4							

Remarks
(1)Optional parts.

N:Old $\frac{\text{Yes}}{\text{No}}$ New. Q:Old $\frac{\text{No}}{\text{Yes}}$ New. R:Old $\frac{\text{Yes}}{\text{Yes}}$ New. S:Old $\frac{\text{No}}{\text{No}}$ New. W:Add. Z:Discontinued. F:Interchangeable by set. K:Q`ty Change

Copyright (C) 2019 YANMAR CO., LTD. All RightsReserved.

Parts No. Index

Parts No.	Fig. No.	Ref. No.
101304-59020	13	7
101720-55750	16	13
102103-55520	16	8
103854-39140	13	6
104200-55321	16	4
104200-55330	16	5
104200-55341	16	6
104200-55750	16	14
105010-11490	4	3
105311-01090	1	5
105425-01690	3	9
110250-55610	16	9
119027-42350	9	17
119131-18320	5	5
119233-44740	9	19
119285-01990	1	8
119285-11990	4	11
119305-35151	8	15
119515-13200	16	1
	17	16
119515-21650	7	11
119515-61440	11	22
119540-55651	13	2
119540-59570	12	42
119600-11460	4	2
	17	10
119620-01750	3	3
119620-02020	1	9
119620-11280	4	26
119620-14200	6	1
119620-21500	7	7
119620-21941	7	13
119620-59700	12	46
119620-77461	15	13
119620-77471	15	14
119620-77490	15	15
119620-79200	15	7
119620-79210	15	8
119620-79220	15	9
119620-79230	15	10
119620-79250	15	5
119620-79290	15	19
119620-79300	15	20
119620-79310	15	21
119620-79320	15	22
119620-79330	15	23
119620-79340	15	24
119620-79350	15	25
119621-21681	7	12
119623-01250	1	6

Parts No.	Fig. No.	Ref. No.
119624-32040	2	18
	17	3
119626-77220	15	1
119626-77450	15	12
119643-66900	16	18
119660-01911	2	17
119660-61901	11	65
119717-01331	1	27
	17	2
119717-01501	2	1
119717-01521	2	5
119717-01570	2	2
119717-01601	3	2
119717-01720	3	7
119717-01750	2	16
119717-01800	2	7
119717-02411	1	12
119717-02930	1	23
119717-03031	4	36
119717-03070	4	37
		38
119717-11101	4	13
119717-11110	4	14
119717-11131	4	15
119717-11190	4	17
119717-11200	4	21
119717-11240	4	22
119717-11260	4	25
119717-11320	4	46
119717-11331	4	47
	17	14
119717-11340	4	18
	17	11
119717-11350	4	19
	17	12
119717-11381	4	35
119717-11650	4	27
119717-11740	4	4
119717-11800	4	58
119717-13110	5	2
	17	15
119717-13600	5	3
119717-14400	6	2
119717-14581	6	3
119717-21200	7	4
119717-21700	7	1
119717-22080	7	14
119717-22090	7	31
119717-22300	7	20
119717-22500	7	16

Parts No.	Fig. No.	Ref. No.
119717-22550	7	33
119717-23001	7	22
119717-23200	7	25
119717-23601	7	26
119717-23611	7	29
119717-23911	7	28
119717-25050	6	9
119717-25101	6	10
119717-25911	6	16
119717-25930	6	15
119717-32050	2	19
	17	4
119717-32060	8	5
	17	18
119717-32080	2	9
119717-32100	2	8
119717-32110	2	13
119717-32120	2	14
119717-35140	8	3
119717-39210	8	10
119717-42003	9	1
119717-42020	9	13
	17	21
119717-42031	9	3
119717-42320	9	10
119717-51150	6	17
119717-51420	10	67
119717-51711	10	92
119717-51750	10	93
119717-51761	10	94
119717-51860	10	96
119717-51930	11	2
119717-53001	12	1
119717-53010	12	3
119717-59510	12	35
119717-59810	12	20
119717-59820	12	24
119717-59830	12	28
119717-61050	11	3
119717-61060	11	4
119717-61070	11	5
119717-77010	14	1
119717-77340	15	28
119717-77801	4	56
119717-77820	4	57
119718-11310	4	45
	17	13
119718-13100	5	1
119718-49800	9	23
119734-01590	2	3

Parts No.	Fig. No.	Ref. No.
119740-21590	7	8
119740-61470	11	78
119744-35070	8	6
119746-01790	3	8
119746-34801	8	1
119747-92600	17	1
119802-03100	4	39
119802-03110	4	40
119802-03121	4	41
119802-03131	4	42
119802-03141	4	43
119802-32130	2	15
119802-55801	13	3
119810-01200	1	26
119810-02941	1	34
119813-59950	12	47
119840-59570	12	45
119865-21600	7	10
119934-55611	13	1
119940-77270	15	27
119C10-42320	17	20
121252-39450	8	9
121254-55510	16	7
121257-55700	16	3
121257-55720	16	10
121257-55731	16	11
121450-42450	9	26
121520-34810	8	2
121850-51960	2	20
	17	5
122710-51090	10	8
123501-79240	15	4
124060-01050	1	4
124066-59100	12	43
124085-02220	3	4
124160-01751	2	28
	4	34
124160-01910	1	7
124450-35110	17	17
124465-44950	9	27
	17	23
124766-59050	12	33
	13	9
128401-77440	15	11
129001-32320	2	11
129001-32330	2	12
129005-59830	8	11
129030-44760	9	20
129052-77380	15	3
129052-77422	15	6

Parts No. Index

Parts No.	Fig. No.	Ref. No.
129052-79260	15	17
129052-79270	15	18
129100-01580	3	1
	7	2
129100-52200	10	112
129150-11230	4	28
129150-11750	4	30
129150-25301	6	14
129150-59120	12	15
129150-59131	12	18
129155-51020	10	4
129155-51280	10	57
		58
	11	7
129155-51400	10	65
129155-51580	10	89
129155-51701	10	91
129155-52051	10	111
129155-61461	11	77
129155-77925	16	19
129210-59080	13	8
129210-59170	12	32
129211-77920	16	20
129350-49530	9	22
129423-77720	15	16
129508-11180	4	16
129612-52100	16	2
129630-77900	11	121
129900-07900	4	54
129900-32130	2	10
129901-11450	4	1
	17	9
129901-53800	12	4
129901-59560	12	41
	17	24
129972-77341	15	29
129E00-13610	5	4
158552-61700	11	60
158552-61900	11	79
158600-51270	10	56
158600-51410	10	66
158600-51420	10	68
158600-51570	10	88
158600-51790	10	95
171031-11741	2	30
171056-49120	9	25
171081-55910	16	15
22190-080002	8	12
		14
	17	19

Parts No.	Fig. No.	Ref. No.
22190-100002	11	81
22190-120002	12	53
	13	11
	17	25
22190-160002	3	11
	10	98
	17	8
22217-120000	10	99
22242-000120	4	31
22252-000220	7	21
22351-050010	10	100
22351-060012	4	20
22372-040000	11	83
22512-040120	7	5
22857-500100	4	48
		49
22857-500160	4	50
23414-080000	9	14
	17	22
23418-060000	16	16
23857-030000	8	13
23876-005000	4	12
23876-030000	2	6
24311-000320	2	29
		31
	4	51
	17	6
24311-240100	16	17
24341-000240	17	7
25152-003700	9	18
26022-050122	10	104
26106-060102	11	69
		84
26106-060122	2	21
	6	8
26106-060142	11	85
26106-060162	2	22
26106-060202	4	52
	11	86
26106-060352	6	13
	8	7
26106-060402	2	23
		24
26106-060452	11	87
26106-060502	9	21
26106-060602	2	25
26106-060652	2	26
	8	8
26106-060752	4	53
26106-080122	9	15

Parts No.	Fig. No.	Ref. No.
26106-080162	4	55
	13	4
26106-080202	9	24
	15	30
26106-080252	3	12
26106-080302	13	5
26106-080402	4	33
26106-080502	9	16
26106-080602	3	13
26106-100252	14	35
26106-100502	15	26
26206-100252	3	5
26206-100302	3	6
26306-080002	2	27
	5	6
26366-080002	11	70
26577-060122	9	12
26716-120002	10	106
26979-050162	4	32
27241-120000	1	13
719717-01561	1	1
719717-02901	1	28
719717-02911	1	31
719734-01500	2	4
719745-51320	10	1
X0280210331	14	23
X0280626010	14	12
X0280996180	14	3
X0281007750	14	2
X0282005991	14	6
X0283006960	14	7
X0284105040	14	13
X0284525010	14	27
X0285007030	14	10
X0285105190	14	4
X0285205030	14	5
X0286105010	14	15
X0286305010	14	17
X0286355010	14	18
X0287405140	14	19
X1280330020	14	33
X1289510130	14	34
X2534000090	14	20
X4284001590	14	8
X9055715000	14	21
X9490065670	14	32
X9490138090	14	25
X9490138100	14	26
X9490138110	14	24
X9490423420	14	30

Parts No.	Fig. No.	Ref. No.
X9490560750	14	29
X9490561001	15	2
X9490562360	14	28
X9490721360	14	22
X9491034320	14	16
X9491034330	14	14
X9491040990	14	11
X9491050100	14	9