YANMAR

PARTS CATALOG

0CD11-M06200EN

Last update Jul., 2010

Directions for the Parts Catalog.

1.The parts stipulated in this Parts Catalog are not necessarily standard equipped parts.
2.Parts may change without prior notice.
3.The following is an example of the Parts Catalog format.

0CF10-G21601 29. FUEL INJECTION PUMP(W/BOOST)

(A)=4JH-DT
(B)=4JH-DTZ
(C)=4JH-DTZP
(D)=4JH-DTZA
(E)=4JH-DTZY
(F)=

① REF.	② LEV.	PARTS NO.	DESCRIPTION	Q'TY (A)	(B)	(C)	(D)	(E)	(F)	③ I	⑤ R
1	1	729595-51390	FUEL INJECTION PUMP	1	1	1	1	1			1
1-1	1	729595-51391	FUEL INJECTION PUMP	1	1	1	1	1		N	1
	(A=E00185)	(B=E00200)									
3	2	26022-060162	SCREW M 6X 16	9	9	9	9	9			
3-1 ④	2	26022-060162	SCREW M 6X 16	4	4	4	4	4		K	
	(A=E00156)	(B=E00156)	(C=E00156) (D=E00156)	(E=E00156)							
4	2	129470-51040	CAMSHAFT	1	1	1	1	1			
5	2	122710-51050	BEARING, ROLLER	2	2	2	2	2			
6	2	129470-51060	RETAINER	1	1	1	1	1			

Remarks
(1) BOOST COMPEMSATOR TYPE. OPTIONAL
PART, TO E00155,(4JH-DT, 4JH-DTZ

① Ref. No.

The Ref. No. listed may not be in accordance with the illustration Ref. No.

(Ex.) Illustration No. 1 List Ref No. 1 (Before change) → 1- 1 (After change)

For interchangeable symbols N, R and K, illustrations for new parts may be abbreviated.

② Lev. (Level)

Level indication
The numbers below indicate the level of relativity towards the main part.
1 ----- Main parts (Assembly parts)
2 ----- Sub component included in " 1 ".
3 ----- Sub component included in " 2 ".
Note) Parts that are not for sale are partially illustrated but not listed.

③ Interchangeability Mark

When a part change takes place, one of the following interchangeability symbols is indicated beside the part.

Symbol	Interchangeability	Contents note
N	Old ← Yes / No → New	New Part is interchangeable for Old Part but Old Part is not interchangeable for New Part.
Q	Old ← No / Yes → New	New Part is not interchangeable for Old Part but Old Part is interchangeable for New Part.
R	Old ← Yes / Yes → New	New/ Old Parts are both interchangeable.
S	Old ← No / No → New	New/ Old Parts are both not interchangeable.
W		Part newly added.
Z		Part discontinued.
F		Not interchangeable by a single part but interchangeable together with related parts.
K		Changes only for used parts quantities.

④ Effective Machine No.

When a part changes, the effective Machine No. will be indicated in the (A)-(F) column.

Product Symbol	Product No.	Product Symbol	Product No.
C	Clutch No. Compressor No.	F	Machine No. (Agricultural Equip.)
D	Drive No.	M	Machine No.
E	Engine No.		

Note 1) A date may follow the symbol. (Ex.) 1996.01
Note 2) " XXXXX " and " ZZZZZ " are for parts that could not be predicted or for engine models that could not be identified.
Note 3) (A=E00185) is the E (Engine Serial Number) for the column (A) model (in this case 4JH-DT) after the parts design change.

⑤ Remarks Mark

Figures or alphabets (symbols) are entered in the remarks column.
The comments (remarks) on parts that are indicated at the bottom of the illustration are the same symbols as those stated above.

Contents

0CD11-M06200

Fig. No.	Fig. Name
3TNV76-XDUFU	
1.	CYLINDER BLOCK
2.	GEAR HOUSING
3.	FLYWHEEL HOUSING & OIL SUMP
4.	CYLINDER HEAD & BONNET
5.	AIR CLEANER
6.	EXHAUST MANIFOLD & SILENCER
7.	CAMSHAFT & DRIVING GEAR
8.	CRANKSHAFT & PISTON
9.	LUB.OIL SYSTEM
10.	COOLING WATER SYSTEM
11.	RADIATOR
12.	FUEL INJECTION PUMP
13.	GOVERNOR
14.	FUEL INJECTION VALVE
15.	FUEL LINE
16.	FUEL TANK
17.	STARTING MOTOR
18.	GENERATOR
19.	ELECTRIC PARTS
20.	GASKET SET

Fig. No.	Fig. Name

Fig.1. CYLINDER BLOCK

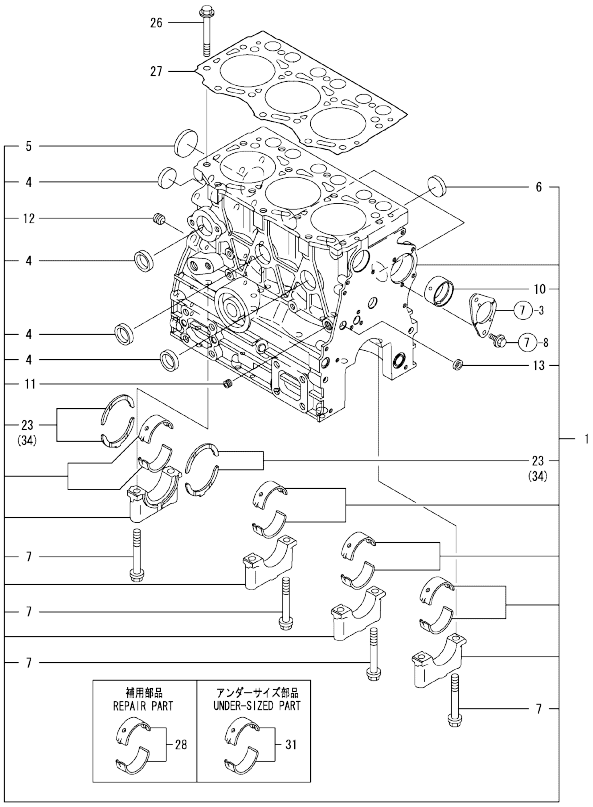

Remarks
(1) REPAIR PART.
(2) UNDER-SIZED(U.S=0.25)PART.
(3) OVER-SIZED(O.S=0.25)PART.

(A)=3TNV76-XDUFU
(B)=
(C)=
(D)=
(E)=
(F)=

No.	Lev.	Parts No.	Description	Q'ty (A)	(B)	(C)	(D)	(E)	(F)	I	R
1	1	719717-01561	BLOCK ASSY, CYLINDER	1							
4	2	105311-01090	PLUG, 30	4							
5	2	119623-01250	PLUG, 45	1							
6	2	119285-01990	PLUG, 25	3							
7	2	119620-02020	BOLT, METAL CAP	8							
10	2	119717-02411	BUSH, CAMSHAFT	1							
11	2	124060-01050	PLUG, PT1/8	1							
12	2	124160-01910	PLUG, PT1/4	1							
13	2	27241-120000	PLUG, 12	1							
23	2	119717-02930	BEARING, THRUST	2							
26	1	119810-01200	BOLT, HEAD	14							
27	1	119717-01330	GASKET, HEAD	1							
28	1	719717-02901	BEARING, MAIN	4							1
31	1	719717-02911	BEARING, 0.25 US	4							2
34	1	119810-02941	BEARING, THRUST 0.25	2							3

N:Old ←Yes/No→ New. Q:Old ←No/Yes→ New. R:Old ←Yes/Yes→ New. S:Old ←No/No→ New. W:Add. Z:Discontinued. F:Interchangeable by set. K:Q'ty Change

Copyright (C) YANMAR CO., LTD. All RightsReserved.

Fig.2. GEAR HOUSING

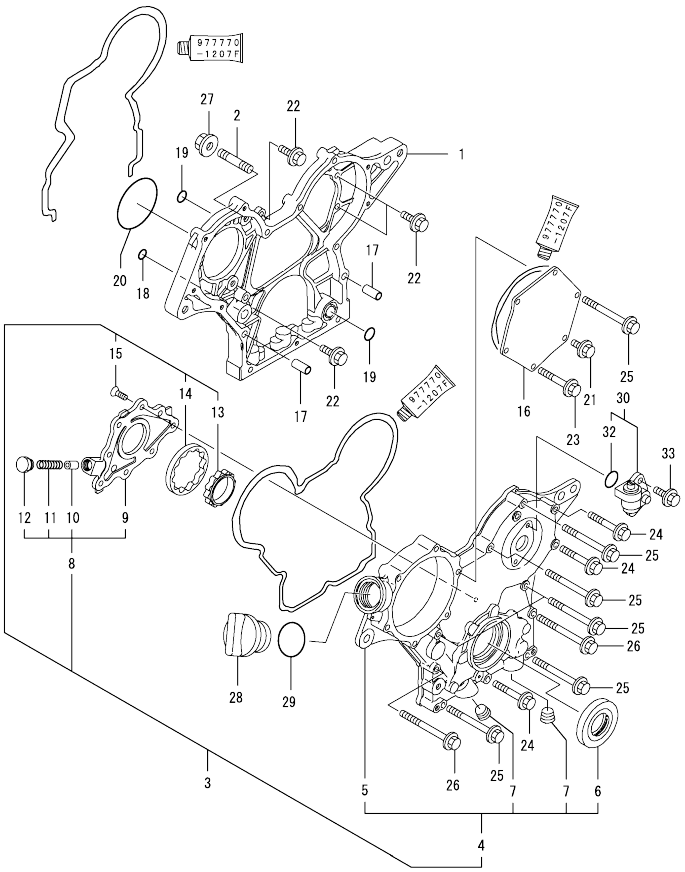

(A)=3TNV76-XDUFU (D)=
(B)= (E)=
(C)= (F)=

No.	Lev.	Parts No.	Description	Q'ty (A)	(B)	(C)	(D)	(E)	(F)	I	R
1	1	119717-01501	CASE, GEAR	1							
2	1	119717-01570	STUD	3							
3	1	119734-01580	CASE ASSY, GEAR	1							
4	2	719734-01510	CASE ASSY, GEAR	1							
5	3	119744-01521	COVER, GEAR CASE	1							
6	3	119717-01800	SEAL, OIL	1							
7	3	23876-030000	PLUG, R03	2							
8	2	119717-32100	COVER ASSY	1							
9	3	119717-32080	COVER	1							
10	3	129900-32130	VALVE, RELIEF	1							
11	3	129001-32320	SPRING	1							
12	3	129001-32330	PLUG	1							
13	2	119717-32110	ROTOR, INNER	1							
14	2	119717-32120	ROTOR, OUTER	1							
15	2	119802-32130	SCREW, M6X16	8							
16	1	119717-01750	COVER	1							
17	1	119660-01911	PIPE, KNOCK	4							
18	1	119624-32040	O-RING, P12.0	1							
19	1	119717-32050	O-RING, P17.0	3							
20	1	121850-51960	O-RING	1							
21	1	26106-060122	BOLT, M6X 12 PLATED	1							
22	1	26106-060162	BOLT, M6X 16 PLATED	4							
23	1	26106-060402	BOLT, M6X 40 PLATED	4							
24	1	26106-060402	BOLT, M6X 40 PLATED	3							
25	1	26106-060602	BOLT, M6X 60 PLATED	7							
26	1	26106-060652	BOLT, M6X 65 PLATED	2							
27	1	26306-080002	NUT, M8	3							
28	1	124160-01751	COVER, FILLER	1							
29	1	24311-000320	O-RING, 1AP32.0	1							
30	1	129150-91400	GEAR	1							
32	2	24341-000240	O-RING, 1AS24.0	1							
33	1	26106-060162	BOLT, M6X 16 PLATED	2							

N:Old ←Yes/No→ New. Q:Old ←No/Yes→ New. R:Old ←Yes/Yes→ New. S:Old ←No/No→ New. W:Add. Z:Discontinued. F:Interchangeable by set. K:Q'ty Change

Copyright (C) YANMAR CO., LTD. All RightsReserved.

Fig.3. FLYWHEEL HOUSING & OIL SUMP

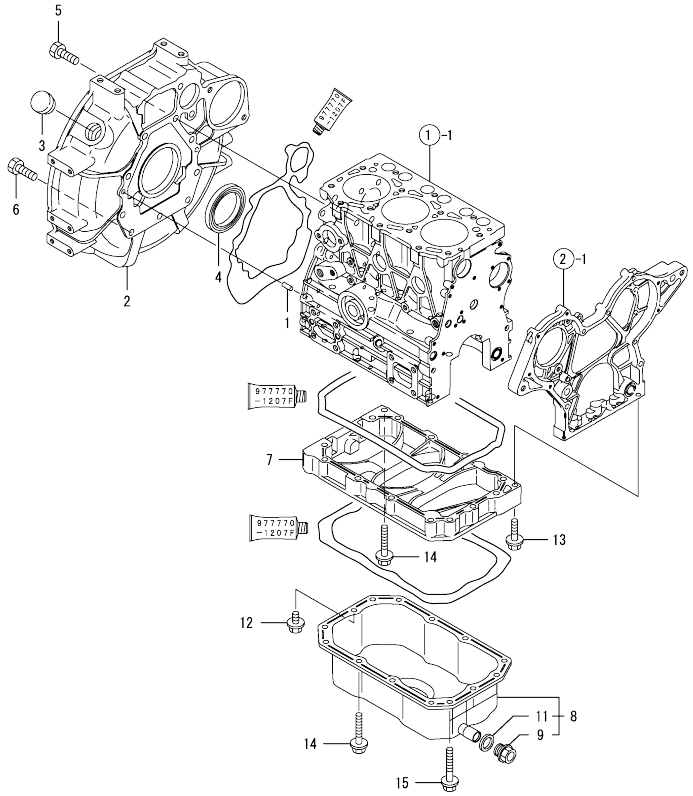

(A)=3TNV76-XDUFU (D)=
(B)= (E)=
(C)= (F)=

No.	Lev.	Parts No.	Description	Q'ty (A)	(B)	(C)	(D)	(E)	(F)	I	R
1	1	129100-01580	PIN, M8X16	2							
2	1	119717-01601	HOUSING, FLYWHEEL	1							
3	1	119620-01750	CAP	1							
4	1	124085-02220	SEAL, OIL	1							
5	1	26206-100252	BOLT, M10X 25 PLATED	8							
6	1	26206-100302	BOLT, M10X 30 PLATED	3							
7	1	119717-01720	SPACER, OIL SUMP	1							
8	1	119761-01770	SUMP ASSY, OIL	1							
9	2	105425-01690	PLUG, 16	1							
11	2	22190-160000	WASHER, SEAL 16	1							
12	1	26106-080122	BOLT, M8X 12 PLATED	1							
13	1	26106-080302	BOLT, M8X 30 PLATED	1							
14	1	26106-080452	BOLT, M8X 45 PLATED	11							
15	1	26106-080502	BOLT, M8X 50 PLATED	3							

N:Old ←Yes/No→ New. Q:Old ←No/Yes→ New. R:Old ←Yes/Yes→ New. S:Old ←No/No→ New. W:Add. Z:Discontinued. F:Interchangeable by set. K:Q'ty Change

Copyright (C) YANMAR CO., LTD. All RightsReserved.

Fig.4. CYLINDER HEAD & BONNET

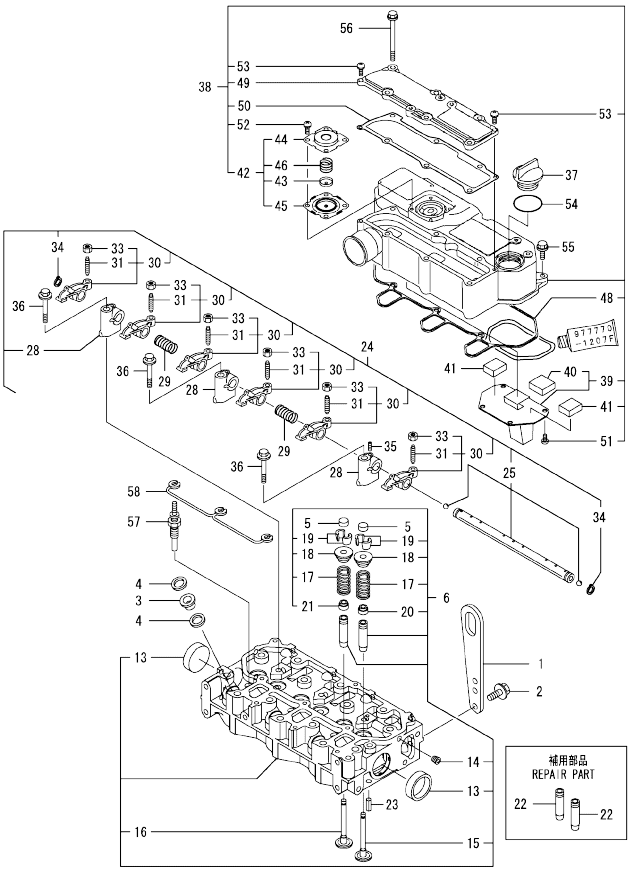

(A)=3TNV76-XDUFU
(B)=
(C)=
(D)=
(E)=
(F)=

No.	Lev.	Parts No.	Description	Q'ty (A)	(B)	(C)	(D)	(E)	(F)	I	R
1	1	129900-07900	LIFTER	1							
2	1	26106-080162	BOLT, M8X 16 PLATED	2							
3	1	129901-11450	PROTECTOR, NOZZLE	3							
4	1	119600-11460	GASKET, NOZZLE	6							
5	1	105010-11490	CAP, VALVE	6							
6	1	119717-11740	HEAD ASSY, CYLINDER	1							
13	2	119285-11990	PLUG, 35	2							
14	2	23876-005000	PLUG, R005	1							
15	2	119717-11101	VALVE, INTAKE	3							
16	2	119717-11110	VALVE, EXHAUST	3							
17	2	119717-11131	SPRING, VALVE	6							
18	2	129508-11180	RETAINER, SPRING	6							
19	2	119717-11190	COTTER	12							
20	2	119717-11340	SEAL, VALVE STEM	3							
21	2	119717-11350	SEAL, VALVE STEM	3							
22	1	119717-11800	GUIDE, VALVE	6							1
23	1	22351-060012	PIN, SPRING 6.0X12	2							
24	1	119717-11200	SUPPORT ASSY, ARM	1							
25	2	119717-11240	SHAFT ASSY, ROCKER	1							
28	2	119717-11260	SUPPORT, ROCKER ARM	3							
29	2	119620-11280	SPRING	2							
30	2	119717-11650	ARM, ROCKER	6							
31	3	129150-11230	SCREW, VALVE ADJUST	6							
33	3	129150-11750	NUT, M8	6							
34	2	22242-000120	RING, 12	2							
35	2	26979-050162	SCREW, M5X16	1							
36	1	26106-080402	BOLT, M8X 40 PLATED	3							
37	1	124160-01751	COVER, FILLER	1							
38	1	119717-11381	BONNET ASSY, HEAD	1							
39	2	119717-03031	PLATE	1							
40	3	119717-03070	BAFFLE, BREATHER	1							
41	2	119717-03070	BAFFLE, BREATHER	2							
42	2	119802-03100	DIAPHRAGM ASSY	1							
43	3	119802-03110	PLATE	1							
44	3	119802-03121	COVER, DIAPHRAGM	1							
45	3	119802-03131	DIAPHRAGM	1							
46	3	119802-03141	SPRING, DIAPHRAGM	1							
48	2	119718-11310	GASKET, BONNET	1							
49	2	119717-11320	COVER, BONNET	1							
50	2	119717-11331	GASKET	1							
51	2	22857-500100	SCREW, 5X10	4							
52	2	22857-500100	SCREW, 5X10	4							
53	2	22857-500160	SCREW, 5X16	2							
54	1	24311-000320	O-RING, 1AP32.0	1							
55	1	26106-060202	BOLT, M6X 20 PLATED	3							
56	1	26106-060752	BOLT, M6X 75 PLATED	6							
57	1	119717-77800	PLUG, GLOW	3							
58	1	119717-77820	CONNECTOR, GLOW PLUG	1							

Remarks
(1) REPAIR PART.

N:Old ←Yes/No→ New. Q:Old ←No/Yes→ New. R:Old ←Yes/Yes→ New. S:Old ←No/No→ New. W:Add. Z:Discontinued. F:Interchangeable by set. K:Q'ty Change

Copyright (C) YANMAR CO., LTD. All RightsReserved.

Fig.5. AIR CLEANER

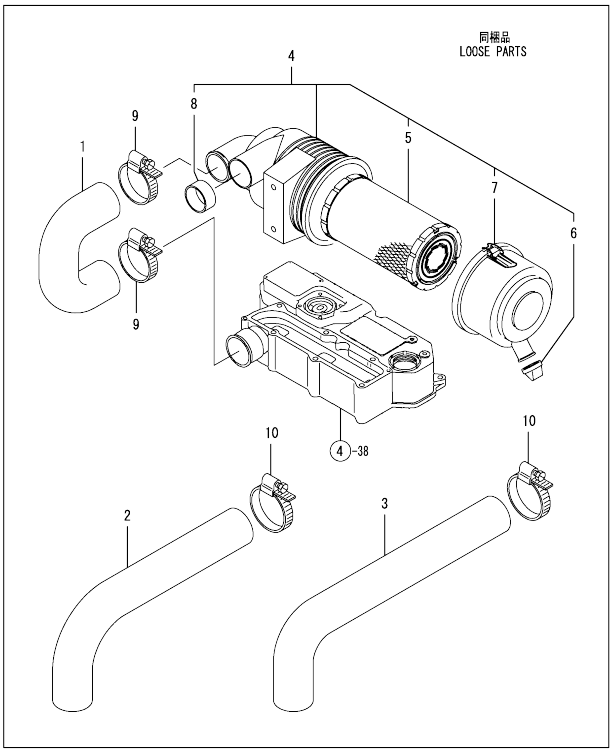

(A)=3TNV76-XDUFU (D)=
(B)= (E)=
(C)= (F)=

No.	Lev.	Parts No.	Description	Q'ty (A)	(B)	(C)	(D)	(E)	(F)	I	R
1	1	119761-12020	PIPE, AIR INTAKE	1							
2	1	119632-12220	PIPE, AIR INTAKE	1							
3	1	119230-12240	PIPE, AIR INTAKE	1							
4	1	119515-12501	CLEANER ASSY, AIR	1							
5	2	119515-12520	ELEMENT	1							
6	2	119808-12540	VALVE, UNLOADER	1							
7	2	119336-12570	COVER ASSY	1							
8	2	105027-12580	RING	1							
9	1	23000-054000	CLAMP, 54	2							
10	1	23000-060000	CLAMP, 60	3							

N:Old ←Yes/No→ New. Q:Old ←No/Yes→ New, R:Old ←Yes/Yes→ New. S:Old ←No/No→ New. W:Add. Z:Discontinued. F:Interchangeable by set. K:Q'ty Change

Copyright (C) YANMAR CO., LTD. All RightsReserved.

Fig.6. EXHAUST MANIFOLD & SILENCER

(A)=3TNV76-XDUFU (D)=
(B)= (E)=
(C)= (F)=

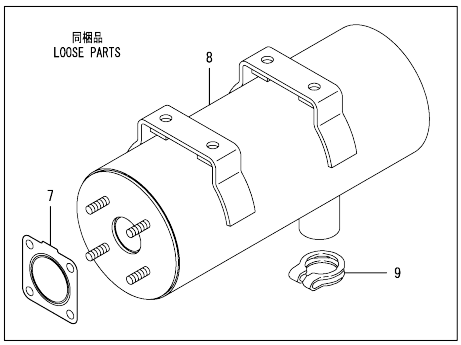

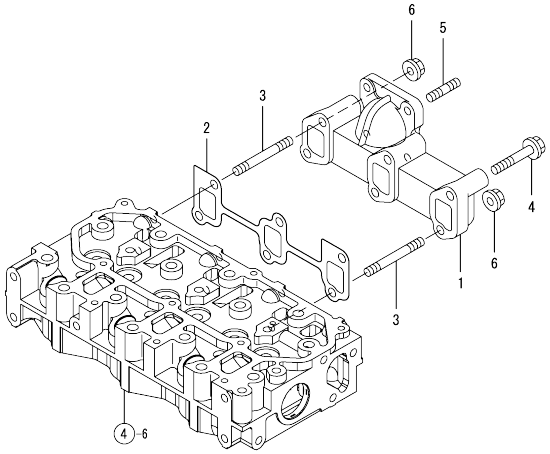

No.	Lev.	Parts No.	Description	Q'ty (A)	(B)	(C)	(D)	(E)	(F)	I	R
1	1	119718-13100	MANIFOLD, EXHAUST	1							
2	1	119717-13110	GASKET	1							
3	1	119717-13600	STUD, M8X50	2							
4	1	119802-13620	BOLT, M8X50	4							
5	1	119131-18320	STUD, M8X22	4							
6	1	26306-080002	NUT, M8	2							
7	1	119515-13200	GASKET, SILENCER	2							
8	1	119230-13510	SILENCER	1							
9	1	124664-13580	CLAMP	1							

N:Old ←Yes/No→ New. Q:Old ←No/Yes→ New. R:Old ←Yes/Yes→ New. S:Old ←No/No→ New. W:Add. Z:Discontinued. F:Interchangeable by set. K:Q'ty Change

Copyright (C) YANMAR CO., LTD. All RightsReserved.

Fig.7. CAMSHAFT & DRIVING GEAR

(A)=3TNV76-XDUFU
(B)=
(C)=
(D)=
(E)=
(F)=

No.	Lev.	Parts No.	Description	Q'ty (A)	(B)	(C)	(D)	(E)	(F)	I	R
1	1	119620-14200	TAPPET	6							
2	1	119717-14400	ROD, PUSH	6							
3	1	119717-14581	CAMSHAFT ASSY	1							
8	1	26106-060122	BOLT, M6X 12 PLATED	2							
9	1	119717-25050	SHAFT, IDLE	1							
10	1	119717-25101	GEAR ASSY, IDLE	1							
13	1	119717-25911	BUSH, IDLE GEAR	1							1
14	1	26106-060352	BOLT, M6X 35 PLATED	3							
15	1	129150-25301	BOLT	4							
16	1	119717-25930	GEAR, PUMP	1							

Remarks
(1) REPAIR PART.

N:Old ←Yes/No→ New. Q:Old ←No/Yes→ New. R:Old ←Yes/Yes→ New. S:Old ←No/No→ New. W:Add. Z:Discontinued. F:Interchangeable by set. K:Q'ty Change

Copyright (C) YANMAR CO., LTD. All RightsReserved.

Fig.8. CRANKSHAFT & PISTON

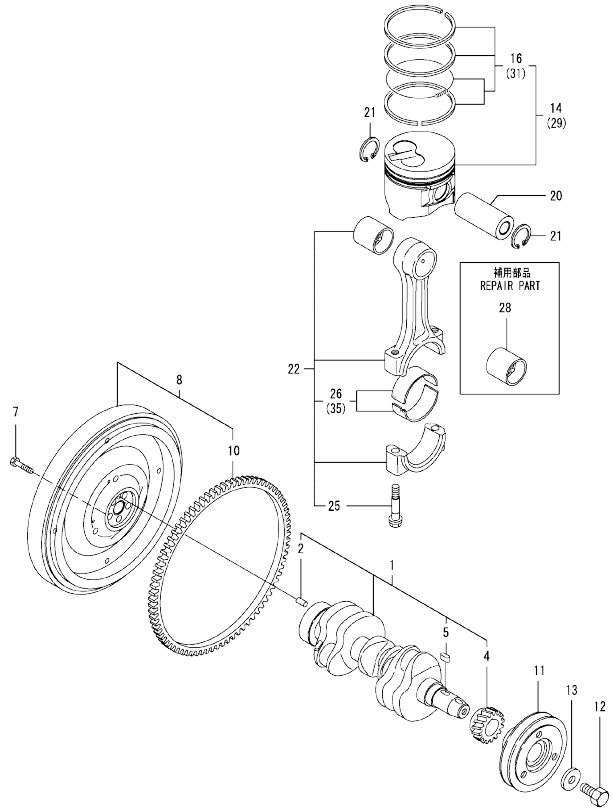

Remarks
(1) REPAIR PART.
(2) UNDER-SIZED(U.S=0.25)PART.
(3) OVER-SIZED(O.S=0.25)PART.

(A)=3TNV76-XDUFU (D)=
(B)= (E)=
(C)= (F)=

No.	Lev.	Parts No.	Description	Q'ty (A)	(B)	(C)	(D)	(E)	(F)	I	R
1	1	119717-21700	CRANKSHAFT ASSY	1							
2	2	129100-01580	PIN, M8X16	1							
4	2	119717-21200	GEAR, CRANKSHAFT	1							
5	2	22512-040120	KEY, 4X 12	1							
7	1	119620-21500	BOLT, FLYWHEEL	5							
8	1	119740-21590	FLYWHEEL ASSY	1							
10	2	119865-21600	GEAR, RING	1							
11	1	119717-21650	V-PULLEY	1							
12	1	119621-21680	BOLT, FLANGE 12X1.25	1							
13	1	119620-21941	WASHER	1							
14	1	119717-22080	PISTON ASSY	3							
16	2	119717-22500	RING SET, PISTON	3							
20	1	119717-22300	PIN, PISTON	3							
21	1	22252-000220	RING, 22	6							
22	1	119717-23000	ROD ASSY, CONNECTING	3							
25	2	119717-23200	BOLT, CONNECTING ROD	6							
26	2	119717-23601	BEARING, CRANK PIN	3							
28	1	119717-23910	BEARING, PISTON PIN	3							1
29	1	119717-22900	PISTON ASSY, 0.25 OS	3							3
31	2	119717-22550	RING SET, 0.25 OS	3							3
35	1	119717-23611	METAL ASSY, 0.25	3							2

N:Old ←Yes/No→ New. Q:Old ←No/Yes→ New, R:Old ←Yes/Yes→ New, S:Old ←No/No→ New, W:Add, Z:Discontinued, F:Interchangeable by set, K:Q'ty Change

Copyright (C) YANMAR CO., LTD. All RightsReserved.

Fig.9. LUB.OIL SYSTEM

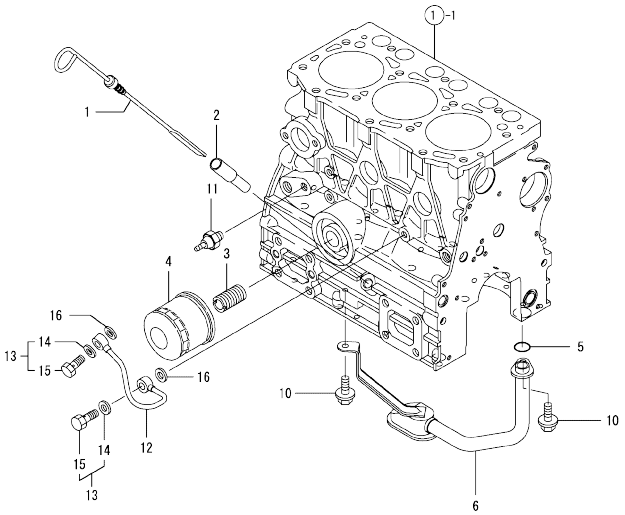

(A)=3TNV76-XDUFU
(B)=
(C)=
(D)=
(E)=
(F)=

No.	Lev.	Parts No.	Description	Q'ty (A)	(B)	(C)	(D)	(E)	(F)	I	R
1	1	119717-34801	DIPSTICK, OIL	1							
2	1	121520-34810	GUIDE, DIPSTICK	1							
3	1	129100-35140	STUD	1							
4	1	119305-35151	FILTER ASSY, D68XL65	1							1
5	1	119717-32060	O-RING, P15.0	1							
6	1	119717-35080	PIPE ASSY, OIL INLET	1							
10	1	26106-060102	BOLT, M6X 10 PLATED	2							
11	1	114250-39450	SWITCH, 0.5KG	1							
12	1	119717-39210	PIPE, OIL	1							
13	1	129005-59830	BOLT ASSY, JOINT M8	2							
14	2	22190-080002	WASHER, SEAL 6	2							
15	2	23857-030000	BOLT, JOINT 3	2							
16	1	22190-080002	WASHER, SEAL 6	2							

Remarks
(1) REPAIR PART.

N:Old ←Yes/No→ New. Q:Old ←No/Yes→ New, R:Old ←Yes/Yes→ New, S:Old ←No/No→ New. W:Add. Z:Discontinued. F:Interchangeable by set. K:Q'ty Change

Copyright (C) YANMAR CO., LTD. All RightsReserved.

Fig.10. COOLING WATER SYSTEM

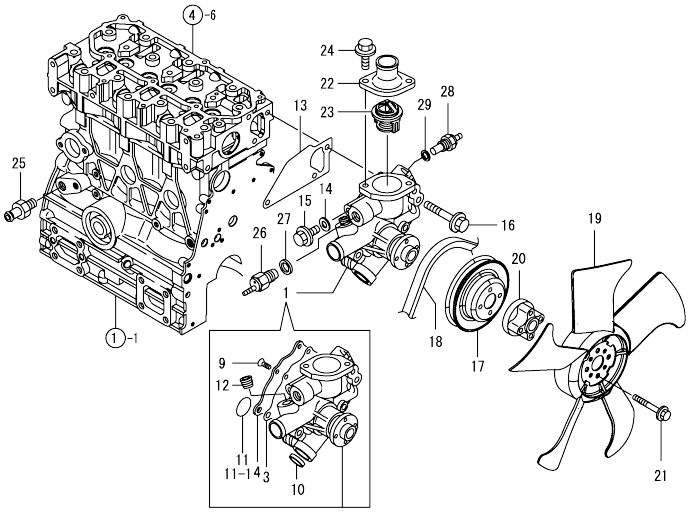

(A)=3TNV76-XDUFU (D)=
(B)= (E)=
(C)= (F)=

No.	Lev.	Parts No.	Description	Q'ty (A)	(B)	(C)	(D)	(E)	(F)	I	R
1	1	119717-42002	PUMP ASSY, WATER	1							
1-1	1	119E10-42000	PUMP ASSY, WATER	1						N	
	(A=ED8437)										
3	2	119717-42031	GASKET	1							
4	2	119717-42041	COVER	1							
9	2	26577-060122	SCREW, M6X12	4							
10	2	27241-250000	PLUG, 25	1							
11	2	119717-42320	O-RING, P26	1							
11-1	2	119C10-42320	O-RING, 2028	1						S	
	(A=ED8437)										
12	2	129916-49740	PLUG, R3/8	1							
13	1	119717-42020	GASKET, WATER PUMP	1							
14	1	23414-080000	GASKET, 8X1.0	1							
15	1	26106-080122	BOLT, M8X 12 PLATED	1							
16	1	26106-080502	BOLT, M8X 50 PLATED	3							
17	1	119515-42350	V-PULLEY, D=110	1							
18	1	119865-42290	V-BELT, A36.5	1							
19	1	129335-44740	FAN, COOLING D335	1							
20	1	129457-44760	SPACER, FAN	1							
21	1	26106-060452	BOLT, M6X 45 PLATED	4							
22	1	129350-49530	COVER, THERMOSTAT	1							
23	1	119717-49800	THERMOSTAT, 71C	1							
24	1	26106-080202	BOLT, M8X 20 PLATED	2							
25	1	121550-49111	JOINT, PT1/4	1							
26	1	121250-44901	SWITCH, THERMO 110	1							
27	1	124465-44950	GASKET, 16	1							
28	1	124250-49351	SENSOR, WATER TEMP.	1							
29	1	129150-49360	GASKET	1							

N:Old ←Yes/No→ New. Q:Old ←No/Yes→ New. R:Old ←Yes/Yes→ New. S:Old ←No/No→ New. W:Add. Z:Discontinued. F:Interchangeable by set. K:Q'ty Change

Copyright (C) YANMAR CO., LTD. All RightsReserved.

Fig.11. RADIATOR

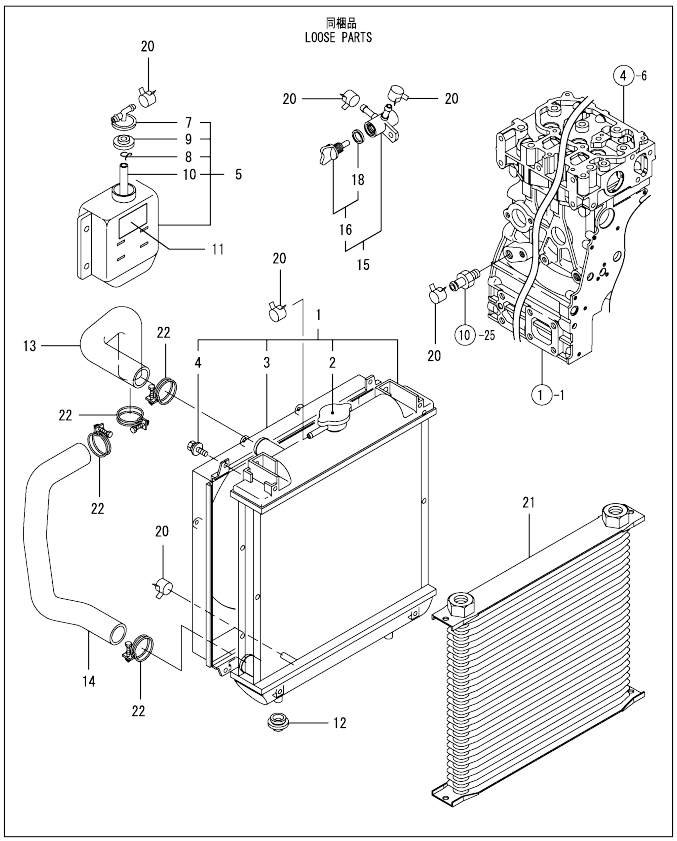

(A)=3TNV76-XDUFU (D)=
(B)= (E)=
(C)= (F)=

No.	Lev.	Parts No.	Description	Q'ty (A)	(B)	(C)	(D)	(E)	(F)	I	R
1	1	119802-44520	RADIATOR ASSY	1							
2	2	129107-44590	CAP, RADIATOR	1							
3	2	119802-44600	SHROUD	1							
4	2	26014-060122	BOLT, M6X 12	4							
5	1	121468-44520	TANK ASSY, SUB	1							
7	2	121450-44531	CAP	1							
8	2	124450-44560	RETAINER	1							
9	2	121470-44581	GASKET	1							
10	2	23065-070130	PIPE, 7X 130	1							
11	1	121470-44540	LABEL, SUB-TANK	1							
12	1	119255-44660	ABSORBER	2							
13	1	119802-49010	PIPE, WATER	1							
14	1	119802-49020	PIPE, WATER	1							
15	1	129150-49100	COCK ASSY, 3-WAY	1							
16	2	129150-49080	COCK, DRAIN	1							
18	3	119629-49080	GASKET	1							
20	1	124066-59100	CLIP, HOSE 8	6							
21	1	172162-74801	COOLER, OIL	1							
22	1	23010-038000	CLAMP, 38	4							

N:Old ←Yes/No→ New. Q:Old ←No/Yes→ New. R:Old ←Yes/Yes→ New. S:Old ←No/No→ New. W:Add. Z:Discontinued. F:Interchangeable by set. K:Q'ty Change

Copyright (C) YANMAR CO., LTD. All RightsReserved.

Fig.12. FUEL INJECTION PUMP

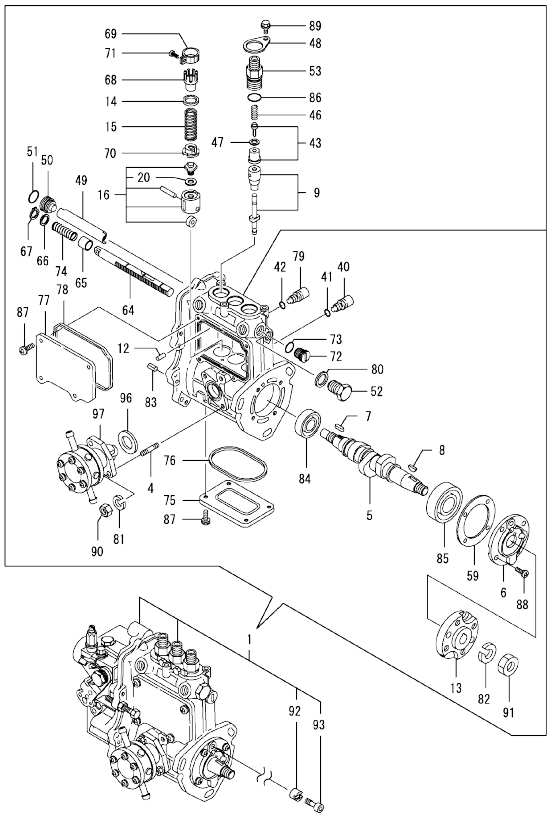

Remarks
(1) GOVERNOR ASSY(FIG.13) IS INCORPORATED IN THIS FUEL INJECTION PUMP(REF.NO.1).

(A)=3TNV76-XDUFU (D)=
(B)= (E)=
(C)= (F)=

No.	Lev.	Parts No.	Description	Q'ty (A)	(B)	(C)	(D)	(E)	(F)	I	R
1	1	719761-51400	PUMP ASSY, INJECTION	1							1
4	2	129155-51020	STUD	2							
5	2	119717-51030	CAMSHAFT	1							
6	2	119717-51060	SUPPORT, CAMSHAFT	1							
7	2	119717-51070	KEY	1							
8	2	122710-51090	KEY	1							
9	2	119740-51100	PLUNGER ASSY	3							
12	2	129155-51140	PIN	3							
13	2	119717-51150	FLANGE	1							
14	2	158600-51170	RETAINER, SPRING	3							
15	2	119717-51190	SPRING, PLUNGER	3							
16	2	119717-51200	TAPPET ASSY	3							
20	3	129155-51600	SHIM SET, ADJUSTING	3							
40	2	158600-51270	STOPPER, TAPPET	3							
41	2	129155-51280	O-RING, S6	3							
42	2	129155-51280	O-RING, S6	1							
43	2	119717-51300	VALVE ASSY, DELIVERY	3							
46	2	119717-51330	SPRING, DELIVERY	3							
47	2	124550-51350	GASKET, DELIVERY	3							
48	2	118400-51370	LOCKING	3							
49	2	129155-51400	DEFLECTOR	1							
50	2	158600-51410	PLUG, DEFLECTOR	1							
51	2	119717-51420	O-RING	1							
52	2	158600-51420	PLUG, DEFLECTOR	1							
53	2	158600-51442	VALVE ASSY, DELIVERY	3							
59	2	129155-51450	SHIM SET, ADJUSTING	1							
64	2	119717-51500	RACK, CONTROL	1							
65	2	129155-51521	BUSH, RACK	1							
66	2	129155-51530	SPACER	1							
67	2	129155-51540	CIRCLIP	1							
68	2	129155-51550	PINION, CONTROL	3							
69	2	129100-51560	PINION	3							
70	2	119717-51570	RETAINER, SPRING	3							
71	2	129100-51570	SCREW	3							
72	2	158600-51570	PLUG	1							
73	2	129155-51580	O-RING	1							
74	2	129155-51591	SPRING, RACK	1							
75	2	129155-51701	COVER	1							
76	2	119717-51711	GASKET	1							
77	2	119717-51750	COVER	1							
78	2	119717-51761	GASKET	1							
79	2	158600-51790	STOOPER, RACK	1							
80	2	22190-160002	WASHER, SEAL 16	1							
81	2	22217-060000	WASHER, SPRING 6	2							
82	2	22217-120000	WASHER, SPRING 12	1							
83	2	22351-050010	PIN, SPRING 5.0X10	2							
84	2	24101-060034	BEARING, BALL 6003	1							
85	2	24101-063034	BEARING, BALL 6303	1							
86	2	24316-000150	O-RING, 4DP15.0	3							
87	2	26022-050122	SCREW, M5X12	8							
88	2	26022-060162	SCREW, M6X16	4							

N:Old ←Yes/No→ New. Q:Old ←No/Yes→ New. R:Old ←Yes/Yes→ New. S:Old ←No/No→ New. W:Add. Z:Discontinued. F:Interchangeable by set. K:Q'ty Change

++ CONTINUE ++

Copyright (C) YANMAR CO., LTD. All RightsReserved.

Fig.12. FUEL INJECTION PUMP

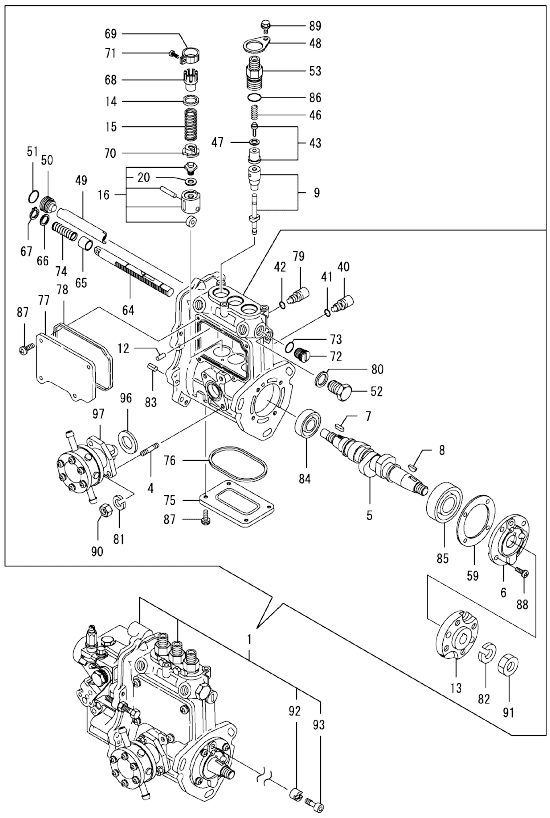

Remarks
(1) GOVERNOR ASSY(FIG.13) IS INCORPORATED IN THIS FUEL INJECTION PUMP(REF.NO.1).

(A)=3TNV76-XDUFU (D)=
(B)= (E)=
(C)= (F)=

No.	Lev.	Parts No.	Description	Q'ty (A)	(B)	(C)	(D)	(E)	(F)	I	R
89	2	26106-050102	BOLT, M5X 10 PLATED	3							
90	2	26716-060002	NUT, M6	2							
91	2	26716-120002	NUT, M12	1							
92	2	119717-51480	COLLAR	1							
93	2	119717-51490	BOLT	1							
96	2	129155-52051	GASKET	1							
97	2	129100-52101	PUMP ASSY, FUEL FEED	1							

N:Old ←Yes/No→ New. Q:Old ←No/Yes→ New. R:Old ←Yes/Yes→ New. S:Old ←No/No→ New. W:Add. Z:Discontinued. F:Interchangeable by set. K:Q'ty Change

Copyright (C) YANMAR CO., LTD. All RightsReserved.

Fig.13. GOVERNOR

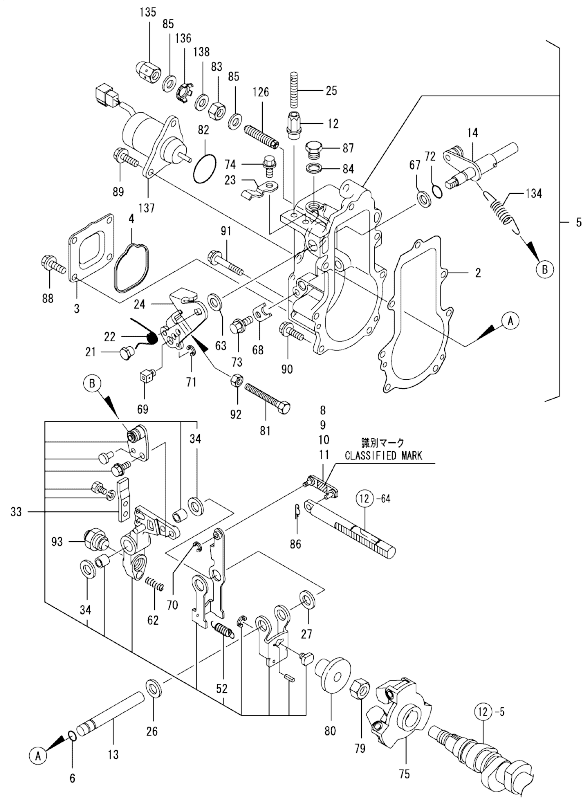

Remarks
(1) SELECTIVE PARTS: CERTAIN THE CLASSIFICATION MARK, THEN PLACE YOUR ORDER.(REF. TO ILLUSTRATION)
* THIS FIGURE(GOVERNOR ASSY)IS INCORPORATED IN THE FUEL INJECTION PUMP ASSY(FIG.12).

(A)=3TNV76-XDUFU (D)=
(B)= (E)=
(C)= (F)=

No.	Lev.	Parts No.	Description	Q'ty (A)	(B)	(C)	(D)	(E)	(F)	I	R
2	2	119717-61050	GASKET	1							
3	2	119717-61060	COVER, GOVERNOR CASE	1							
4	2	119717-61070	GASKET	1							
5	2	119751-61100	CASE ASSY, GOVERNOR	1							
6	3	129155-51280	O-RING, S6	1							
8	3	119717-61120	LINK, MARK :3	1							1
9	3	119717-61130	LINK, MARK 98	1							1
10	3	119717-61140	LINK, MARK 88	1							1
11	3	119717-61150	LINK, MARK 03	1							1
12	3	129209-61370	NUT, M6	1							
13	3	129052-61390	SHAFT	1							
14	3	119717-61400	SHAFT ASSY	1							
21	3	129255-61410	NUT, LOCK	1							
22	3	119534-61420	SPRING	1							
23	3	119534-61430	RETAINER	1							
24	3	119515-61440	LEVER, CONTROL	1							
25	3	129155-61450	BOLT, LIMITER	1							
26	3	129156-61460	SHIM, T=0.6	1							
27	3	129155-61480	SPACER ASSY	1							
33	3	119761-61500	LEVER ASSY, GOVERNOR	1							
34	4	174307-51700	SHIM SET	2							
52	4	129486-61540	SPRING, SET	1							
62	3	129100-61650	SPRING, CONTROLLER	1							
63	3	158552-61700	SHIM SET	1							
67	3	158552-61710	SHIM, T=1.0	1							
68	3	119660-61901	RETAINER, SHAFT	1							
69	3	124756-67510	RETAINER	1							
70	3	22272-000030	RING, E- 3	1							
71	3	22272-000070	RING, E- 7	1							
72	3	24341-000070	O-RING, 1AS7.0	1							
73	3	26106-060102	BOLT, M6X 10 PLATED	1							
74	3	26106-060102	BOLT, M6X 10 PLATED	1							
75	2	119717-61200	WEIGHT ASSY,GOVERNOR	1							
79	2	129008-61301	NUT	1							
80	2	129155-61341	SLEEVE	1							
81	2	129155-61460	BOLT, IDLE	1							
82	2	158552-61900	O-RING	1							
83	2	129209-61920	NUT, ARB	1							
84	2	22190-100002	WASHER, SEAL 10	1							
85	2	22190-120002	WASHER, SEAL 12	2							
86	2	22372-040000	PIN, SNAP 4	1							
87	2	23887-100002	PLUG, 10	1							
88	2	26106-060102	BOLT, M6X 10 PLATED	4							
89	2	26106-060142	BOLT, M6X 14 PLATED	2							
90	2	26106-060202	BOLT, M6X 20 PLATED	4							
91	2	26106-060452	BOLT, M6X 45 PLATED	3							
92	2	26756-060002	NUT, LOCK M6	1							
93	2	119513-61550	ANGLEICH ASSY	1							
126	2	158601-61700	LIMITER ASSY, FUEL	1							
134	2	129500-61720	SPRING, GOVERNOR	1							
135	2	129209-61930	NUT, CAP	1							

N:Old ←Yes/No→ New. Q:Old ←No/Yes→ New. R:Old ←Yes/Yes→ New. S:Old ←No/No→ New. W:Add. Z:Discontinued. F:Interchangeable by set. K:Q'ty Change

++ CONTINUE ++

Copyright (C) YANMAR CO., LTD. All RightsReserved.

Fig.13. GOVERNOR

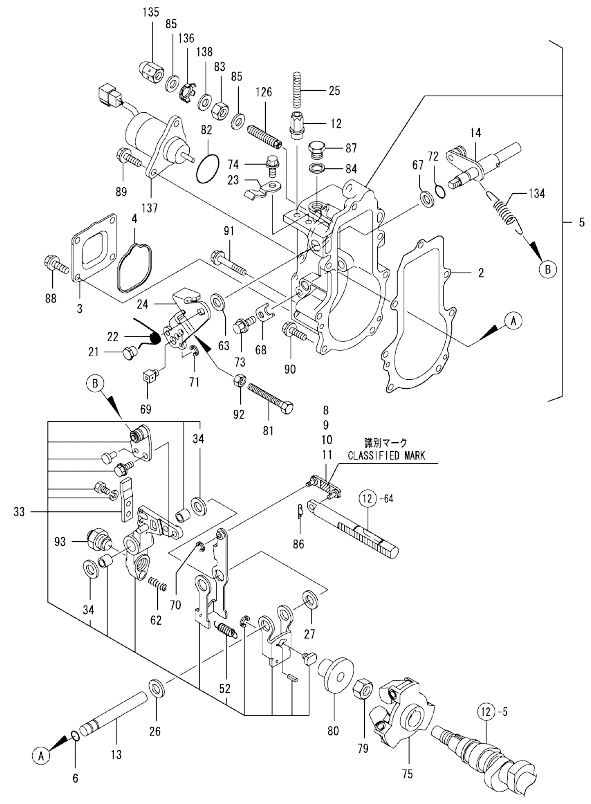

Remarks
(1) SELECTIVE PARTS: CERTAIN THE CLASSIFICATION MARK, THEN PLACE YOUR ORDER.(REF. TO ILLUSTRATION)
* THIS FIGURE(GOVERNOR ASSY)IS INCORPORATED IN THE FUEL INJECTION PUMP ASSY(FIG.12).

(A)=3TNV76-XDUFU (D)=
(B)= (E)=
(C)= (F)=

No.	Lev.	Parts No.	Description	Q'ty (A)	(B)	(C)	(D)	(E)	(F)	I	R
136	2	129209-61970	PLATE	1							
137	2	119653-77950	SOLENOID, STOP	1							
138	2	23414-120016	GASKET, 12X1.0	1							

N:Old ←Yes/No→ New. Q:Old ←No/Yes→ New, R:Old ←Yes/Yes→ New, S:Old ←No/No→ New, W:Add, Z:Discontinued, F:Interchangeable by set, K:Q'ty Change

Copyright (C) YANMAR CO., LTD. All RightsReserved.

Fig.14. FUEL INJECTION VALVE

(A)=3TNV76-XDUFU
(B)=
(C)=
(D)=
(E)=
(F)=

No.	Lev.	Parts No.	Description	Q'ty (A)	(B)	(C)	(D)	(E)	(F)	I	R
1	1	119717-53001	VALVE ASSY,INJECTION	3							
2	2	118200-53010	HOLDER, NOZZLE	3							
3	2	119717-53010	VALVE ASSY,INJECTION	3							
4	2	129901-53800	SHIM SET, ADJUSTING	3							1
15	1	129150-59120	RETAINER, PIPE	1							
18	2	129150-59131	BOLT, M4X14	2							
20	1	119717-59810	PIPE ASSY, INJECTION	1							
24	1	119717-59820	PIPE ASSY, INJECTION	1							
28	1	119717-59830	PIPE ASSY, INJECTION	1							
32	1	129956-59010	PIPE ASSY, FUEL	1							
33	2	124766-59050	CLIP, HOSE 12	2							
34	2	129957-59101	TUBE, CORRUGATED	1							
35	2	105225-59511	PIPE, FUEL	1							
36	1	119717-59510	PIPE ASSY, RETURN	1							
42	1	119744-59560	PIPE ASSY, RETURN	1							
43	2	124066-59100	CLIP, HOSE 8	2							
45	1	129901-59560	GASKET	3							
46	1	119740-59590	JOINT, OVER FLOW	1							
47	1	119620-59700	NUT, NOZZLE	3							
48	1	119813-59950	VALVE ASSY, CHECK	1							
54	1	22190-120002	WASHER, SEAL 12	2							

Remarks
(1) REPAIR PART.

N:Old ←Yes/No→ New. Q:Old ←No/Yes→ New. R:Old ←Yes/Yes→ New. S:Old ←No/No→ New. W:Add. Z:Discontinued. F:Interchangeable by set. K:Q'ty Change

Copyright (C) YANMAR CO., LTD. All RightsReserved.

Fig.15. FUEL LINE

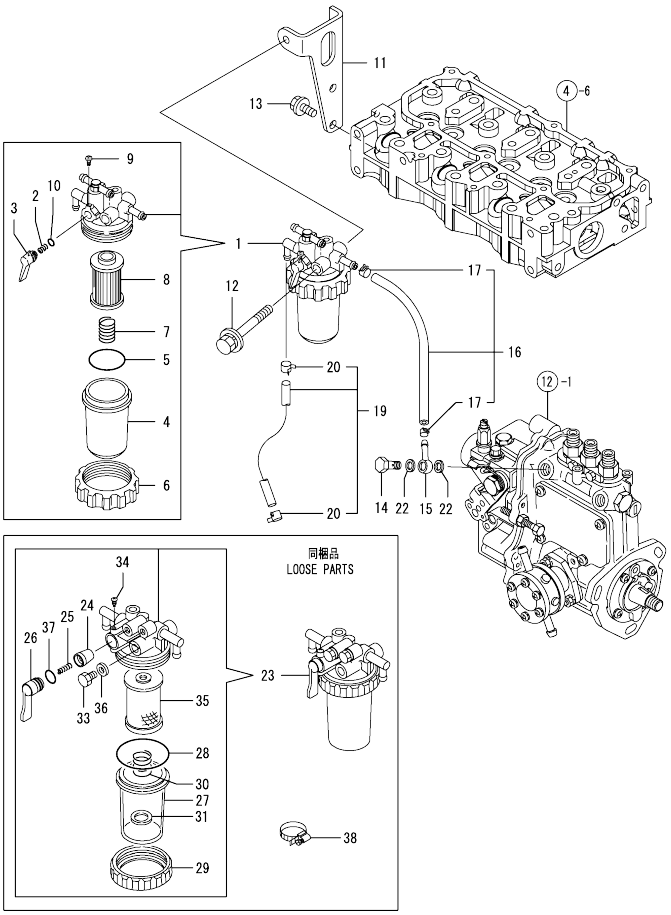

(A)=3TNV76-XDUFU (D)=
(B)= (E)=
(C)= (F)=

No.	Lev.	Parts No.	Description	Q'ty (A)	(B)	(C)	(D)	(E)	(F)	I	R
1	1	119833-55620	FILTER ASSY, FUEL	1							
2	2	104200-55330	SPRING, VALVE	1							
3	2	119810-55340	LEVER	1							
4	2	121254-55510	COVER	1							
5	2	102103-55520	O-RING	1							
6	2	110250-55610	RING, RETAINING	1							
7	2	121250-55620	SPRING	1							
8	2	119810-55650	ELEMENT	1							
9	2	104200-55750	SCREW, M4	1							
10	2	24311-240100	O-RING, 1AP10A	1							
11	1	119717-55650	BRACKET, FILTER	1							
12	1	26014-080702	BOLT, M8X 70	1							
13	1	26106-080162	BOLT, M8X 16 PLATED	2							
14	1	103854-39140	BOLT, PIPE JOINT	1							
15	1	101304-59020	JOINT, PIPE 12	1							
16	1	129210-59080	PIPE ASSY, FUEL	1							
17	2	124766-59050	CLIP, HOSE 12	2							
19	1	129210-59170	PIPE ASSY, FUEL	1							
20	2	124766-59050	CLIP, HOSE 12	2							
22	1	22190-120002	WASHER, SEAL 12	2							
23	1	129335-55700	SEPARATOR ASSY,WATER	1							
24	2	104200-55321	VALVE, TAPER	1							
25	2	104200-55330	SPRING, VALVE	1							
26	2	104200-55341	HANDLE	1							
27	2	124064-55510	COVER	1							
28	2	102103-55520	O-RING	1							
29	2	110250-55610	RING, RETAINING	1							
30	2	121257-55720	SPRING	1							
31	2	121257-55731	FLOAT	1							
33	2	101720-55750	PLUG, 6	2							
34	2	104200-55750	SCREW, M4	1							
35	2	171081-55910	SCREEN	1							
36	2	23418-060000	GASKET, 6X1.0	2							
37	2	24311-240100	O-RING, 1AP10A	1							
38	1	23000-013000	CLAMP, 13	14							

N:Old ←Yes/No→ New. Q:Old ←No/Yes→ New. R:Old ←Yes/Yes→ New. S:Old ←No/No→ New. W:Add. Z:Discontinued. F:Interchangeable by set. K:Q'ty Change

Copyright (C) YANMAR CO., LTD. All RightsReserved.

Fig.16. FUEL TANK

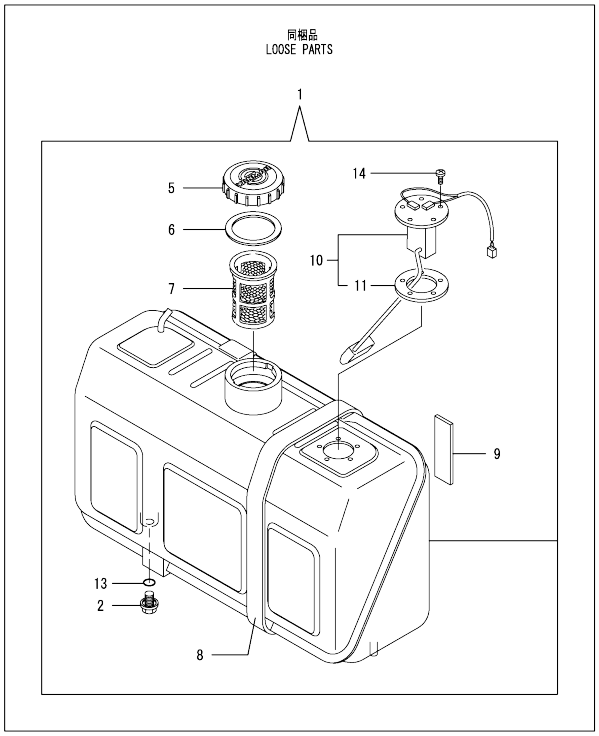

(A)=3TNV76-XDUFU (D)=
(B)= (E)=
(C)= (F)=

No.	Lev.	Parts No.	Description	Q'ty (A)	(B)	(C)	(D)	(E)	(F)	I	R
1	1	129065-55010	TANK ASSY, FUEL	1							
2	2	124060-01640	PLUG, M12	1							
5	2	105302-55040	CAP, FUEL TANK	1							
6	2	101504-55051	GASKET	1							
7	2	101504-55101	STRAINER, FUEL	1							
8	2	121400-55830	SEAT, RUBBER	2							
9	2	121400-55870	FELT, FUEL TANK	2							
10	2	198290-56600	GAUGE ASSY, FUEL	1							
11	3	194420-56620	GASKET	1							
13	2	24311-000140	O-RING, 1AP14.0	1							
14	2	26557-050122	SCREW, M5X12	5							

N:Old $\xleftarrow[\text{No}]{\text{Yes}}$ New. Q:Old $\xleftarrow[\text{Yes}]{\text{No}}$ New. R:Old $\xleftarrow[\text{Yes}]{\text{Yes}}$ New. S:Old $\xleftarrow[\text{No}]{\text{No}}$ New. W:Add. Z:Discontinued. F:Interchangeable by set. K:Q'ty Change

Copyright (C) YANMAR CO., LTD. All RightsReserved.

Fig.17. STARTING MOTOR

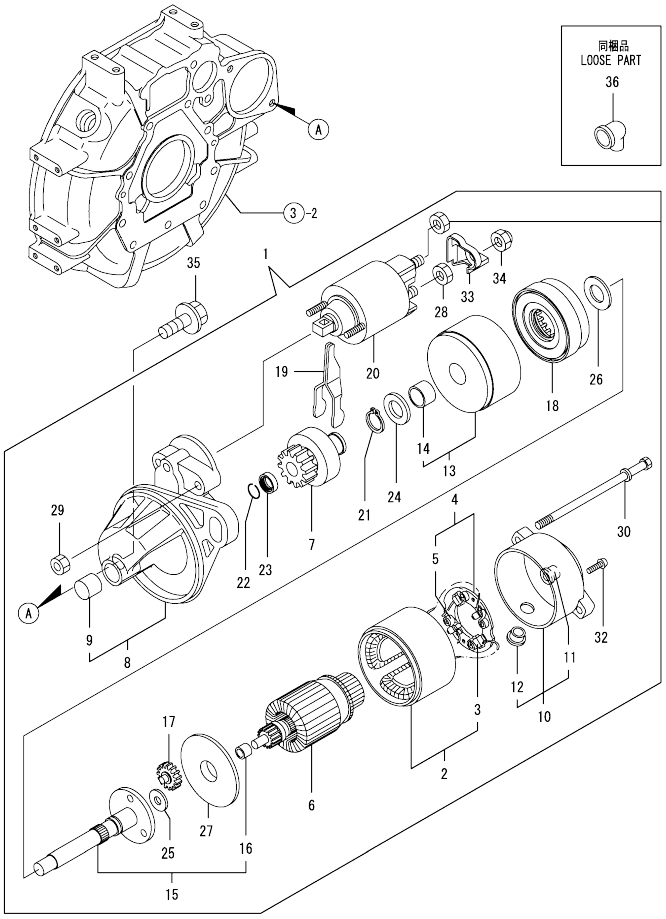

(A)=3TNV76-XDUFU (D)=
(B)= (E)=
(C)= (F)=

No.	Lev.	Parts No.	Description	Q'ty (A)	(B)	(C)	(D)	(E)	(F)	I	R
1	1	119717-77010	STARTER, P1.1	1							
2	2	X0281007750	YOKE ASSY	1							
3	3	X0280996180	STARTER KIT	2							
4	2	X0285105190	HOLDER ASSY	1							
5	3	X0285205030	SPRING	4							
6	2	X0282005991	ARMATURE ASSY	1							
7	2	X0283006960	CLUTCH ASSY	1							
8	2	X4284001590	HOUSING ASSY,STARTER	1							
9	3	X9491050100	BEARING, NEEDLE	1							
10	2	X0285007030	FRAME ASSY.	1							
11	3	X9491040990	BEARING	1							
12	3	X0280626010	COVER	1							
13	2	X0284105040	BEARING ASSY	1							
14	3	X9491034330	BEARING	1							
15	2	X0286105010	SHAFT ASSY	1							
16	3	X9491034320	BEARING	1							
17	2	X0286305010	GEAR	3							
18	2	X0286355010	GEAR	1							
19	2	X0287405140	LEVER	1							
20	2	X0534007800	SWITCH ASSY	1							
21	2	X9055715000	RING	1							
22	2	X9490721360	RING	1							
23	2	X0280210331	NUT	1							
24	2	X9490138110	WASHER	1							
25	2	X9490138090	WASHER	1							
26	2	X9490138100	WASHER	1							
27	2	X0284525010	PLATE	1							
28	2	X9490562360	NUT	1							
29	2	X9490560750	NUT	2							
30	2	X9490423420	BOLT, THROUGH	2							
32	2	X9490065670	SCREW, M4X6	2							
33	2	X0280335350	COVER, TERMINAL	1							
34	2	X1289510130	NUT	1							
35	1	26106-100252	BOLT, M10X 25 PLATED	2							
36	1	124160-77020	COVER, TERMINAL	1							

N:Old ←Yes/No→ New. Q:Old ←No/Yes→ New. R:Old ←Yes/Yes→ New. S:Old ←No/No→ New. W:Add. Z:Discontinued. F:Interchangeable by set. K:Q'ty Change

Copyright (C) YANMAR CO., LTD. All RightsReserved.

Fig.18. GENERATOR

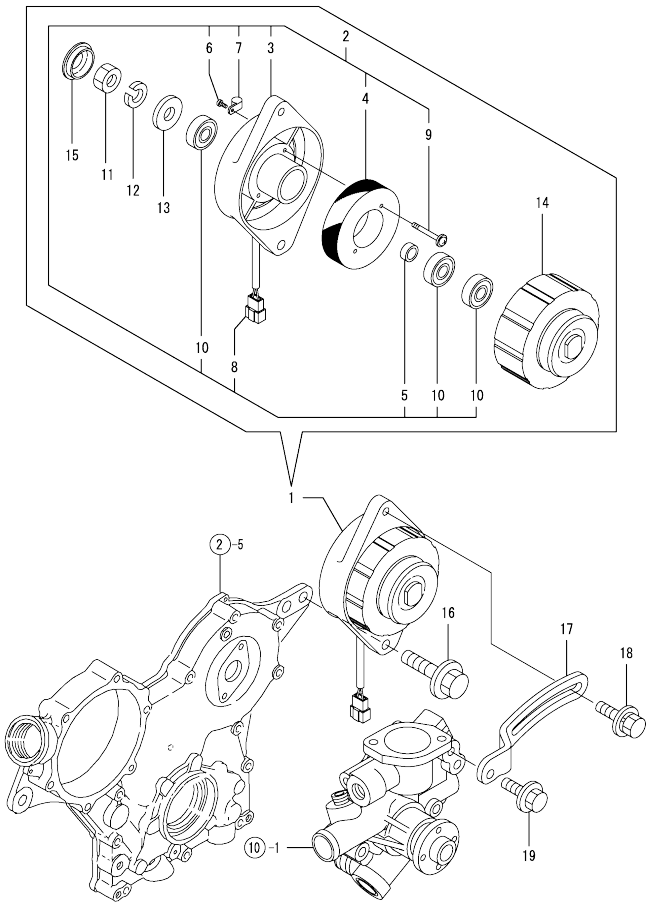

(A)=3TNV76-XDUFU (D)=
(B)= (E)=
(C)= (F)=

No.	Lev.	Parts No.	Description	Q'ty (A)	(B)	(C)	(D)	(E)	(F)	I	R
1	1	119910-77200	DYNAMO ASSY	1							
2	2	X2A10592KA	PLATE ASSY	1							
3	3	X2A07075KB	PLATE, COIL	1							
4	3	X3A02982KC	STATOR ASSY	1							
5	3	X4A10092KA	COLLAR	1							
6	3	XYSPS400800	SCREW	1							
7	3	XM069000000	CLAMP	1							
8	3	XM771860000	COUPLER	1							
9	3	119259-77250	SCREW, WASHER SET	2							
10	3	24104-062010	BEARING, 6201UUC3	3							
11	2	XM863720000	NUT	1							
12	2	XM219230000	WASHER, SPRING	1							
13	2	XM860250000	WASHER, PLAIN	1							
14	2	X3A08863KA	FLYWHEEL ASSY	1							
15	2	XM771870000	CAP	1							
16	1	26106-100402	BOLT, M10X 40 PLATED	1							
17	1	119717-77330	ADJUSTER	1							
18	1	119810-77340	BOLT, ADJUSTER	1							
19	1	26106-080202	BOLT, M8X 20 PLATED	1							

N:Old ◄Yes/No► New. Q:Old ◄No/Yes► New. R:Old ◄Yes/Yes► New. S:Old ◄No/No► New. W:Add. Z:Discontinued. F:Interchangeable by set. K:Q'ty Change

Copyright (C) YANMAR CO., LTD. All RightsReserved.

Fig.19. ELECTRIC PARTS

(A)=3TNV76-XDUFU
(B)=
(C)=
(D)=
(E)=
(F)=

No.	Lev.	Parts No.	Description	Q'ty (A)	(B)	(C)	(D)	(E)	(F)	I	R
1	1	194697-56110	METER ASSY, FUEL OIL	1							
2	1	119643-66900	DIODE	1							
3	1	119247-77100	RELAY, SAFETY	2							
4	1	119653-77711	LIMITER, CURRENT	1							
5	1	124732-77720	LAMP, CHARGING	5							
6	1	171440-77801	RELAY, EMERGENCY	1							
7	1	171010-77850	THERMOSTAT	1							
8	1	119650-77910	RELAY ASSY, GLOW	1							
11	1	129211-77920	TIMER	1							
12	1	171014-91102	TACHOMETER	1							
13	1	124701-91140	CABLE, L=985	1							
14	1	121575-91250	SWITCH, KEY	1							

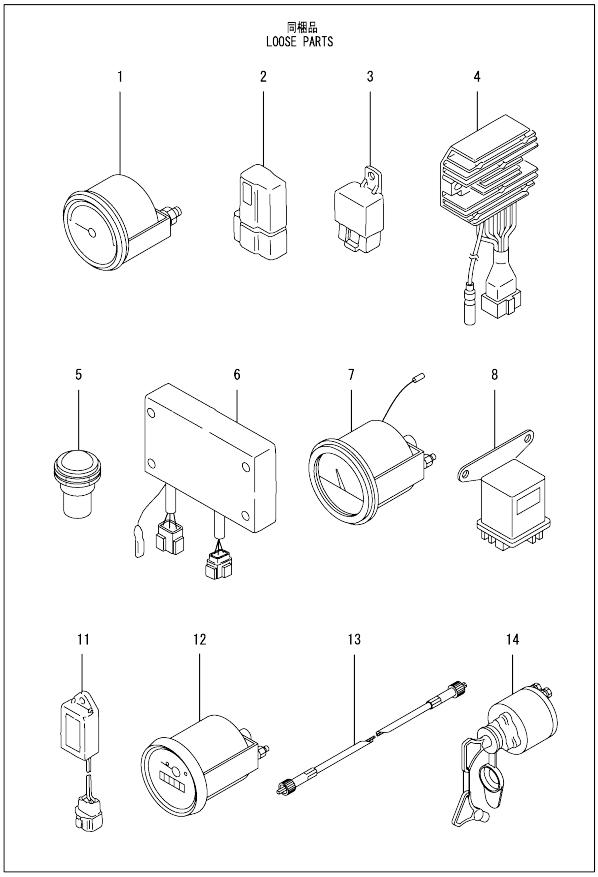

N:Old ←Yes/No→ New. Q:Old ←No/Yes→ New. R:Old ←Yes/Yes→ New. S:Old ←No/No→ New. W:Add. Z:Discontinued. F:Interchangeable by set. K:Q'ty Change

Copyright (C) YANMAR CO., LTD. All RightsReserved.

Fig.20. GASKET SET

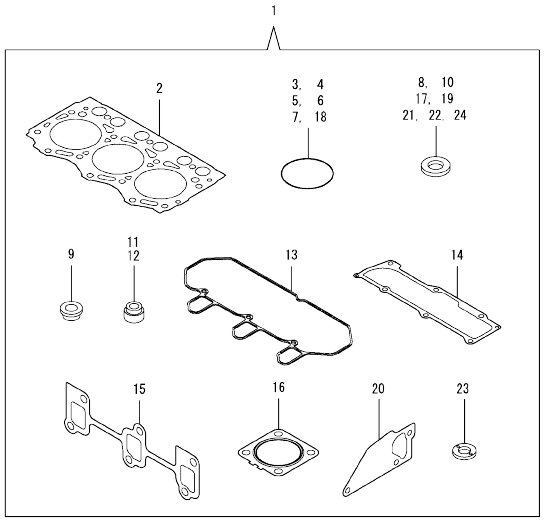

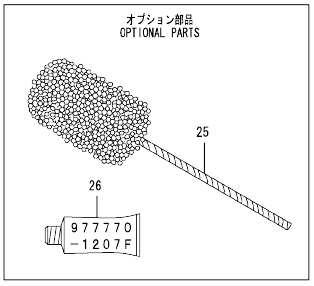

Remarks
(1) OPTIONAL PART.

(A)=3TNV76-XDUFU (D)=
(B)= (E)=
(C)= (F)=

No.	Lev.	Parts No.	Description	Q'ty (A)	(B)	(C)	(D)	(E)	(F)	I	R
1	1	719717-92950	GASKET SET	1							1
2	2	119717-01330	GASKET, HEAD	1							
3	2	119624-32040	O-RING, P12.0	1							
4	2	119717-32050	O-RING, P17.0	3							
5	2	121850-51960	O-RING	1							
6	2	24311-000320	O-RING, 1AP32.0	2							
7	2	24341-000240	O-RING, 1AS24.0	1							
8	2	22190-160002	WASHER, SEAL 16	1							
9	2	129901-11450	PROTECTOR, NOZZLE	3							
10	2	119600-11460	GASKET, NOZZLE	6							
11	2	119717-11340	SEAL, VALVE STEM	3							
12	2	119717-11350	SEAL, VALVE STEM	3							
13	2	119718-11310	GASKET, BONNET	1							
14	2	119717-11331	GASKET	1							
15	2	119717-13110	GASKET	1							
16	2	119515-13200	GASKET, SILENCER	1							
17	2	22190-120002	WASHER, SEAL 12	4							
18	2	119717-32060	O-RING, P15.0	1							
19	2	22190-080002	WASHER, SEAL 6	4							
20	2	119717-42020	GASKET, WATER PUMP	1							
21	2	23414-080000	GASKET, 8X1.0	1							
22	2	124465-44950	GASKET, 16	1							
23	2	129901-59560	GASKET	3							
24	2	129150-49360	GASKET	1							
25	1	129400-92420	FLEX HORN	1							1
26	1	977770-1207F	GASKET.LIQUID	1							1

N:Old ←Yes/No→ New. Q:Old ←No/Yes→ New. R:Old ←Yes/Yes→ New. S:Old ←No/No→ New. W:Add. Z:Discontinued. F:Interchangeable by set. K:Q'ty Change

Copyright (C) YANMAR CO., LTD. All RightsReserved.

Parts No. Index

Parts No.	Fig. No.	Ref. No.
101304-59020	15	15
101504-55051	16	6
101504-55101	16	7
101720-55750	15	33
102103-55520	15	5
		28
103854-39140	15	14
104200-55321	15	24
104200-55330	15	2
		25
104200-55341	15	26
104200-55750	15	9
		34
105010-11490	4	5
105027-12580	5	8
105225-59511	14	35
105302-55040	16	5
105311-01090	1	4
105425-01690	3	9
110250-55610	15	6
		29
114250-39450	9	11
118200-53010	14	2
118400-51370	12	48
119131-18320	6	5
119230-12240	5	3
119230-13510	6	8
119247-77100	19	3
119255-44660	11	12
119259-77250	18	9
119285-01990	1	6
119285-11990	4	13
119305-35151	9	4
119336-12570	5	7
119513-61550	13	93
119515-12501	5	4
119515-12520	5	5
119515-13200	6	7
	20	16
119515-42350	10	17
119515-61440	13	24
119534-61420	13	22
119534-61430	13	23
119600-11460	4	4
	20	10
119620-01750	3	3
119620-02020	1	7
119620-11280	4	29
119620-14200	7	1
119620-21500	8	7

Parts No.	Fig. No.	Ref. No.
119620-21941	8	13
119620-59700	14	47
119621-21680	8	12
119623-01250	1	5
119624-32040	2	18
	20	3
119629-49080	11	18
119632-12220	5	2
119643-66900	19	2
119650-77910	19	8
119653-77711	19	4
119653-77950	13	137
119660-01911	2	17
119660-61901	13	68
119717-01330	1	27
	20	2
119717-01501	2	1
119717-01570	2	2
119717-01601	3	2
119717-01720	3	7
119717-01750	2	16
119717-01800	2	6
119717-02411	1	10
119717-02930	1	23
119717-03031	4	39
119717-03070	4	40
		41
119717-11101	4	15
119717-11110	4	16
119717-11131	4	17
119717-11190	4	19
119717-11200	4	24
119717-11240	4	25
119717-11260	4	28
119717-11320	4	49
119717-11331	4	50
	20	14
119717-11340	4	20
	20	11
119717-11350	4	21
	20	12
119717-11381	4	38
119717-11650	4	30
119717-11740	4	6
119717-11800	4	22
119717-13110	6	2
	20	15
119717-13600	6	3
119717-14400	7	2
119717-14581	7	3

Parts No.	Fig. No.	Ref. No.
119717-21200	8	4
119717-21650	8	11
119717-21700	8	1
119717-22080	8	14
119717-22300	8	20
119717-22500	8	16
119717-22550	8	31
119717-22900	8	29
119717-23000	8	22
119717-23200	8	25
119717-23601	8	26
119717-23611	8	35
119717-23910	8	28
119717-25050	7	9
119717-25101	7	10
119717-25911	7	13
119717-25930	7	16
119717-32050	2	19
	20	4
119717-32060	9	5
	20	18
119717-32080	2	9
119717-32100	2	8
119717-32110	2	13
119717-32120	2	14
119717-34801	9	1
119717-35080	9	6
119717-39210	9	12
119717-42002	10	1
119717-42020	10	13
	20	20
119717-42031	10	3
119717-42041	10	4
119717-42320	10	11
119717-49800	10	23
119717-51030	12	5
119717-51060	12	6
119717-51070	12	7
119717-51150	12	13
119717-51190	12	15
119717-51200	12	16
119717-51300	12	43
119717-51330	12	46
119717-51420	12	51
119717-51480	12	92
119717-51490	12	93
119717-51500	12	64
119717-51570	12	70
119717-51711	12	76
119717-51750	12	77

Parts No.	Fig. No.	Ref. No.
119717-51761	12	78
119717-53001	14	1
119717-53010	14	3
119717-55650	15	11
119717-59510	14	36
119717-59810	14	20
119717-59820	14	24
119717-59830	14	28
119717-61050	13	2
119717-61060	13	3
119717-61070	13	4
119717-61120	13	8
119717-61130	13	9
119717-61140	13	10
119717-61150	13	11
119717-61200	13	75
119717-61400	13	14
119717-77010	17	1
119717-77330	18	17
119717-77800	4	57
119717-77820	4	58
119718-11310	4	48
	20	13
119718-13100	6	1
119734-01580	2	3
119740-21590	8	8
119740-51100	12	9
119740-59590	14	46
119744-01521	2	5
119744-59560	14	42
119751-61100	13	5
119761-01770	3	8
119761-12020	5	1
119761-61500	13	33
119802-03100	4	42
119802-03110	4	43
119802-03121	4	44
119802-03131	4	45
119802-03141	4	46
119802-13620	6	4
119802-32130	2	15
119802-44520	11	1
119802-44600	11	3
119802-49010	11	13
119802-49020	11	14
119808-12540	5	6
119810-01200	1	26
119810-02941	1	34
119810-55340	15	3
119810-55650	15	8

Parts No. Index

Parts No.	Fig. No.	Ref. No.
119810-77340	18	18
119813-59950	14	48
119833-55620	15	1
119865-21600	8	10
119865-42290	10	18
119910-77200	18	1
119C10-42320	10	11 -1
119E10-42000	10	1 -1
121250-44901	10	26
121250-55620	15	7
121254-55510	15	4
121257-55720	15	30
121257-55731	15	31
121400-55830	16	8
121400-55870	16	9
121450-44531	11	7
121468-44520	11	5
121470-44540	11	11
121470-44581	11	9
121520-34810	9	2
121550-49111	10	25
121575-91250	19	14
121850-51960	2	20
	20	5
122710-51090	12	8
124060-01050	1	11
124060-01640	16	2
124064-55510	15	27
124066-59100	11	20
	14	43
124085-02220	3	4
124160-01751	2	28
	4	37
124160-01910	1	12
124160-77020	17	36
124250-49351	10	28
124450-44560	11	8
124465-44950	10	27
	20	22
124550-51350	12	47
124664-13580	6	9
124701-91140	19	13
124732-77720	19	5
124756-67510	13	69
124766-59050	14	33
	15	17
		20
129001-32320	2	11
129001-32330	2	12
129005-59830	9	13

Parts No.	Fig. No.	Ref. No.
129008-61301	13	79
129052-61390	13	13
129065-55010	16	1
129100-01580	3	1
	8	2
129100-35140	9	3
129100-51560	12	69
129100-51570	12	71
129100-52101	12	97
129100-61650	13	62
129107-44590	11	2
129150-11230	4	31
129150-11750	4	33
129150-25301	7	15
129150-49080	11	16
129150-49100	11	15
129150-49360	10	29
	20	24
129150-59120	14	15
129150-59131	14	18
129150-91400	2	30
129155-51020	12	4
129155-51140	12	12
129155-51280	12	41
		42
	13	6
129155-51400	12	49
129155-51450	12	59
129155-51521	12	65
129155-51530	12	66
129155-51540	12	67
129155-51550	12	68
129155-51580	12	73
129155-51591	12	74
129155-51600	12	20
129155-51701	12	75
129155-52051	12	96
129155-61341	13	80
129155-61450	13	25
129155-61460	13	81
129155-61480	13	27
129156-61460	13	26
129209-61370	13	12
129209-61920	13	83
129209-61930	13	135
129209-61970	13	136
129210-59080	15	16
129210-59170	15	19
129211-77920	19	11
129255-61410	13	21

Parts No.	Fig. No.	Ref. No.
129335-44740	10	19
129335-55700	15	23
129350-49530	10	22
129400-92420	20	25
129457-44760	10	20
129486-61540	13	52
129500-61720	13	134
129508-11180	4	18
129900-07900	4	1
129900-32130	2	10
129901-11450	4	3
	20	9
129901-53800	14	4
129901-59560	14	45
	20	23
129916-49740	10	12
129956-59010	14	32
129957-59101	14	34
158552-61700	13	63
158552-61710	13	67
158552-61900	13	82
158600-51170	12	14
158600-51270	12	40
158600-51410	12	50
158600-51420	12	52
158600-51442	12	53
158600-51570	12	72
158600-51790	12	79
158601-61700	13	126
171010-77850	19	7
171014-91102	19	12
171081-55910	15	35
171440-77801	19	6
172162-74801	11	21
174307-51700	13	34
194420-56620	16	11
194697-56110	19	1
198290-56600	16	10
22190-080002	9	14
		16
	20	19
22190-100002	13	84
22190-120002	13	85
	14	54
	15	22
	20	17
22190-160000	3	11
22190-160002	12	80
	20	8
22217-060000	12	81

Parts No.	Fig. No.	Ref. No.
22217-120000	12	82
22242-000120	4	34
22252-000220	8	21
22272-000030	13	70
22272-000070	13	71
22351-050010	12	83
22351-060012	4	23
22372-040000	13	86
22512-040120	8	5
22857-500100	4	51
		52
22857-500160	4	53
23000-013000	15	38
23000-054000	5	9
23000-060000	5	10
23010-038000	11	22
23065-070130	11	10
23414-080000	10	14
	20	21
23414-120016	13	138
23418-060000	15	36
23857-030000	9	15
23876-005000	4	14
23876-030000	2	7
23887-100002	13	87
24101-060034	12	84
24101-063034	12	85
24104-062010	18	10
24311-000140	16	13
24311-000320	2	29
	4	54
	20	6
24311-240100	15	10
		37
24316-000150	12	86
24341-000070	13	72
24341-000240	2	32
	20	7
26014-060122	11	4
26014-080702	15	12
26022-050122	12	87
26022-060162	12	88
26106-050102	12	89
26106-060102	9	10
	13	73
		74
		88
26106-060122	2	21
	7	8
26106-060142	13	89

Parts No. Index

Parts No.	Fig. No.	Ref. No.
26106-060162	2	22
		33
26106-060202	4	55
	13	90
26106-060352	7	14
26106-060402	2	23
		24
26106-060452	10	21
	13	91
26106-060602	2	25
26106-060652	2	26
26106-060752	4	56
26106-080122	3	12
	10	15
26106-080162	4	2
	15	13
26106-080202	10	24
	18	19
26106-080302	3	13
26106-080402	4	36
26106-080452	3	14
26106-080502	3	15
	10	16
26106-100252	17	35
26106-100402	18	16
26206-100252	3	5
26206-100302	3	6
26306-080002	2	27
	6	6
26557-050122	16	14
26577-060122	10	9
26716-060002	12	90
26716-120002	12	91
26756-060002	13	92
26979-050162	4	35
27241-120000	1	13
27241-250000	10	10
719717-01561	1	1
719717-02901	1	28
719717-02911	1	31
719717-92950	20	1
719734-01510	2	4
719761-51400	12	1
977770-1207F	20	26
X0280210331	17	23
X0280335350	17	33
X0280626010	17	12
X0280996180	17	3
X0281007750	17	2
X0282005991	17	6

Parts No.	Fig. No.	Ref. No.
X0283006960	17	7
X0284105040	17	13
X0284525010	17	27
X0285007030	17	10
X0285105190	17	4
X0285205030	17	5
X0286105010	17	15
X0286305010	17	17
X0286355010	17	18
X0287405140	17	19
X0534007800	17	20
X1289510130	17	34
X2A07075KB	18	3
X2A10592KA	18	2
X3A02982KC	18	4
X3A08863KA	18	14
X4284001590	17	8
X4A10092KA	18	5
X9055715000	17	21
X9490065670	17	32
X9490138090	17	25
X9490138100	17	26
X9490138110	17	24
X9490423420	17	30
X9490560750	17	29
X9490562360	17	28
X9490721360	17	22
X9491034320	17	16
X9491034330	17	14
X9491040990	17	11
X9491050100	17	9
XM069000000	18	7
XM219230000	18	12
XM771860000	18	8
XM771870000	18	15
XM860250000	18	13
XM863720000	18	11
XYSPS400800	18	6

Parts No.	Fig. No.	Ref. No.

Parts No.	Fig. No.	Ref. No.