YANMAR

PARTS CATALOG

0CD50-M04420EN

Last update Feb., 2019

PREFACE

This parts catalog is the 1st edition of 3TNV76-XMR1 for MITSUBISHI HEAVY INDUSTRIES THERMAL SYSTEMS,LTD.

Published : February, 2019

Contents

0CD50-M04420

Fig. No.	Fig. Name
ENGINE	
1.	CYLINDER BLOCK
2.	GEAR HOUSING
3.	FLYWHEEL HOUSING & OIL SUMP
4.	CYLINDER HEAD & BONNET
5.	EXHAUST MANIFOLD
6.	CAMSHAFT & DRIVING GEAR
7.	CRANKSHAFT & PISTON
8.	LUB. OIL SYSTEM
9.	COOLING WATER SYSTEM
10.	FUEL INJECTION PUMP
11.	GOVERNOR
12.	FUEL INJECTION VALVE
13.	FUEL PIPE
14.	STARTER MOTOR
15.	TENSION PULLEY
16.	ACCESSORY
17.	GASKET SET

Fig.1. CYLINDER BLOCK

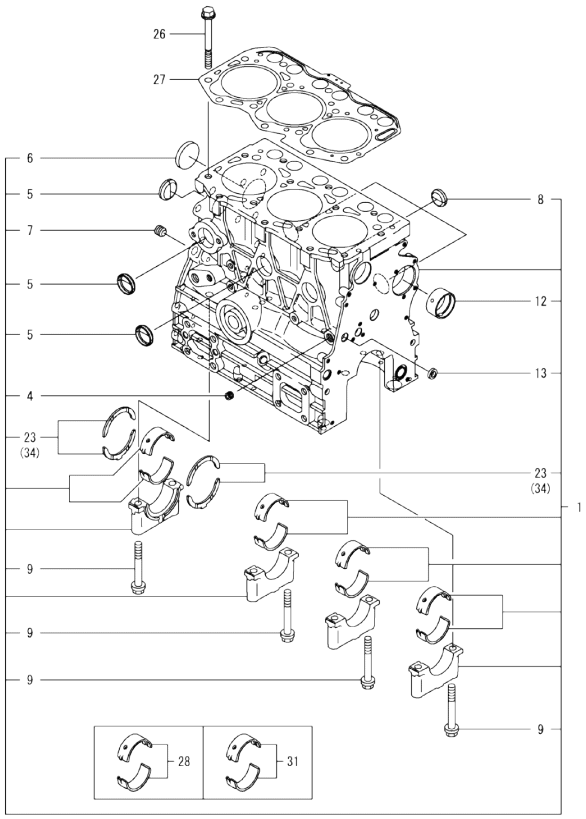

Remarks
(1)Spare parts.
(2)Under-sized(U.S.=0.25) parts.
(3)Over-sized(O.S.=0.25) parts.

(A)=3TNV76-XMR1
(B)=
(C)=
(D)=
(E)=
(F)=

No.	Lev.	Parts No.	Description	Q'ty (A)	(B)	(C)	(D)	(E)	(F)	I	R
1	1	719717-01561	BLOCK ASSY, CYLINDER	1							
4	2	124060-01050	PLUG, PT1/8	1							
5	2	105311-01090	PLUG, 30	4							
6	2	119623-01250	PLUG, 45	1							
7	2	124160-01910	PLUG, PT1/4	1							
8	2	119285-01990	PLUG, 25	3							
9	2	119620-02020	BOLT, METAL CAP	8							
12	2	119717-02411	BUSH, CAMSHAFT	1							
13	2	27241-120000	PLUG, 12	1							
23	2	119717-02930	METAL ASSY, THRUST	2							
26	1	119810-01200	BOLT, CYLINDER HEAD	14							
27	1	119717-01331	GASKET, HEAD	1							
28	1	719717-02901	METAL ASSY, MAIN	4							1
31	1	719717-02911	METAL ASSY, MAIN .25	4							2
34	1	119810-02941	METAL ASSY, 0.25 OS	2							3

N:Old ←Yes/No→ New. Q:Old ←No/Yes→ New. R:Old ←Yes/Yes→ New. S:Old ←No/No→ New. W:Add. Z:Discontinued. F:Interchangeable by set. K:Q'ty Change

Copyright (C) 2019 YANMAR CO., LTD. All RightsReserved.

Fig.2. GEAR HOUSING

(A)=3TNV76-XMR1
(B)=
(C)=
(D)=
(E)=
(F)=

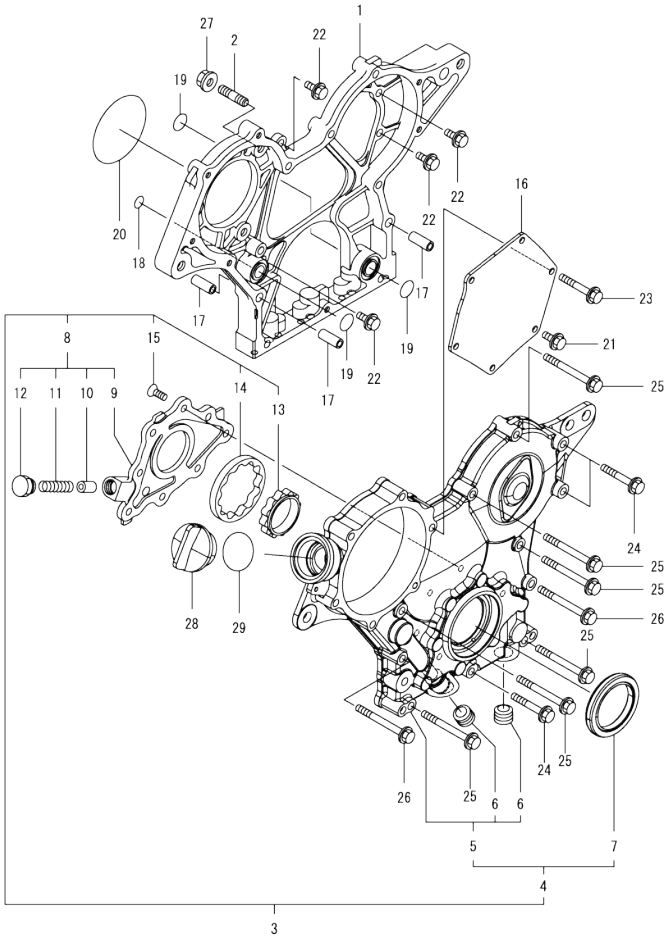

No.	Lev.	Parts No.	Description	Q'ty (A)	(B)	(C)	(D)	(E)	(F)	I	R
1	1	119717-01501	CASE, GEAR	1							
2	1	119717-01570	STUD	3							
3	1	119734-01590	COVER ASSY, CASE	1							
4	2	719734-01500	COVER ASSY, CASE	1							
5	3	119717-01521	COVER, GEAR CASE	1							
6	4	23876-030000	PLUG, R03	2							
7	3	119717-01800	SEAL, OIL	1							
8	2	119717-32100	COVER ASSY, PUMP	1							
9	3	119717-32080	COVER, OIL PUMP	1							
10	3	129900-32130	VALVE, RELIEF	1							
11	3	129001-32320	SPRING	1							
12	3	129001-32330	PLUG	1							
13	2	119717-32110	ROTOR, INNER	1							
14	2	119717-32120	ROTOR, OUTER	1							
15	2	119802-32130	SCREW, M6X16	8							
16	1	119717-01750	COVER, PUMP	1							
17	1	119660-01911	PIPE, KNOCK 6X17	4							
18	1	119624-32040	O-RING, P12.0	1							
19	1	119717-32050	O-RING, P17.0	3							
20	1	121850-51960	O-RING, FUEL PUMP	1							
21	1	26106-060122	BOLT, M6X 12 PLATED	1							
22	1	26106-060162	BOLT, M6X 16 PLATED	4							
23	1	26106-060402	BOLT, M6X 40 PLATED	4							
24	1	26106-060402	BOLT, M6X 40 PLATED	3							
25	1	26106-060602	BOLT, M6X 60 PLATED	7							
26	1	26106-060652	BOLT, M6X 65 PLATED	2							
27	1	26306-080002	NUT, M8	3							
28	1	124160-01751	CAP, FILLER	1							
29	1	24311-000320	O-RING, 1AP32.0	1							

N:Old ←Yes/No→ New. Q:Old ←No/Yes→ New. R:Old ←Yes/Yes→ New. S:Old ←No/No→ New. W:Add. Z:Discontinued. F:Interchangeable by set. K:Q'ty Change

Copyright (C) 2019 YANMAR CO., LTD. All RightsReserved.

Fig.3. FLYWHEEL HOUSING & OIL SUMP

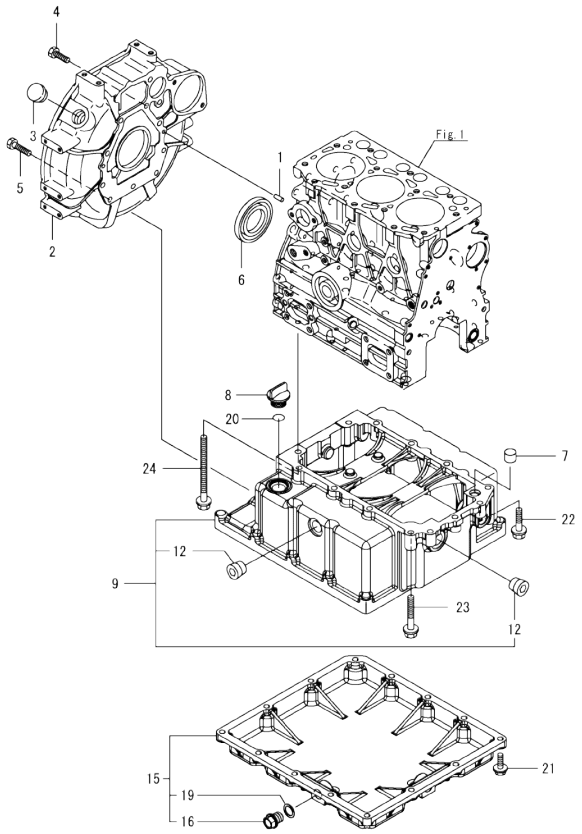

(A)=3TNV76-XMR1
(B)=
(C)=
(D)=
(E)=
(F)=

No.	Lev.	Parts No.	Description	Q'ty (A)	(B)	(C)	(D)	(E)	(F)	I	R
1	1	129100-01580	PIN, PARALLEL 8X16	2							
2	1	119717-01660	HOUSING, FLYWHEEL	1							
3	1	119620-01750	CAP, WHEEL COVER	1							
4	1	26206-100252	BOLT, M10X 25 PLATED	8							
5	1	26206-100302	BOLT, M10X 30 PLATED	3							
6	1	119734-02220	SEAL, OIL WHEEL SIDE	1							
7	1	119718-01740	PIPE, KNOCK	1							
8	1	106760-01770	CAP, OIL SUPPLY	1							
9	1	119717-01830	OIL PAN ASSY, UPPER	1							
12	2	124085-01771	PLUG, NPT1/2	2							
15	1	119717-01880	SUMP ASSY, OIL	1							
16	2	105425-01690	PLUG, DRAIN M16	2							
19	2	22190-160002	WASHER, SEAL 16	2							
20	1	24311-000180	O-RING, 1AP18.0	1							
21	1	26106-080252	BOLT, M8X 25 PLATED	14							
22	1	26106-080352	BOLT, M8X 35 PLATED	10							
23	1	26106-080702	BOLT, M8X 70 PLATED	1							
24	1	26106-081202	BOLT, M8X120 PLATED	2							

N:Old ←Yes/No→ New. Q:Old ←No/Yes→ New. R:Old ←Yes/Yes→ New. S:Old ←No/No→ New. W:Add. Z:Discontinued. F:Interchangeable by set. K:Q'ty Change

Copyright (C) 2019 YANMAR CO., LTD. All RightsReserved.

Fig.4. CYLINDER HEAD & BONNET

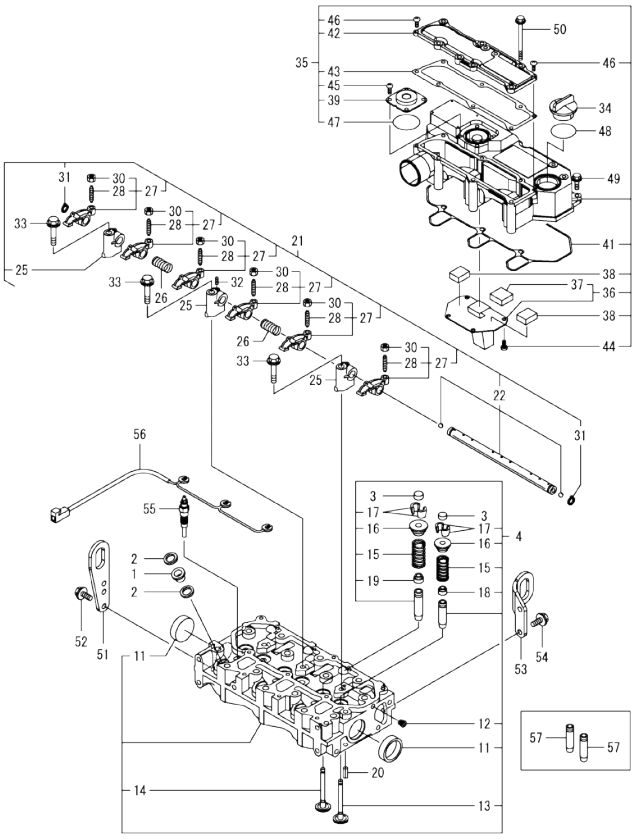

(A)=3TNV76-XMR1
(B)=
(C)=
(D)=
(E)=
(F)=

No.	Lev.	Parts No.	Description	Q'ty (A)	(B)	(C)	(D)	(E)	(F)	I	R
1	1	129901-11450	PROTECTOR, NOZZLE	3							
2	1	119600-11460	GASKET, NOZZLE	6							
3	1	105010-11490	CAP, VALVE	6							
4	1	119717-11740	HEAD ASSY, CYLINDER	1							
11	2	119285-11990	PLUG, 35	2							
12	2	23876-005000	PLUG, R005	1							
13	2	119717-11101	VALVE, INTAKE	3							
14	2	119717-11110	VALVE, EXHAUST	3							
15	2	119717-11131	SPRING, VALVE	6							
16	2	129508-11180	RETAINER, SPRING	6							
17	2	119717-11190	COTTER, VALVE	12							
18	2	119717-11340	SEAL, VALVE STEM	3							
19	2	119717-11350	SEAL, VALVE STEM	3							
20	1	22351-060012	PIN, SPRING 6.0X12	2							
21	1	119717-11200	SUPPORT ASSY, ROCKER	1							
22	2	119717-11240	SHAFT ASSY, ARM	1							
25	2	119717-11260	SUPPORT, ROCKER ARM	3							
26	2	119620-11280	SPRING, SHAFT	2							
27	2	119717-11650	ARM ASSY, ROCKER INT	6							
28	3	129150-11230	SCREW, VALVE ADJUST	6							
30	3	129150-11750	NUT, M8XP1.0	6							
31	2	22242-000120	RING, 12	2							
32	2	26979-050162	SCREW, M5X16	1							
33	1	26106-080402	BOLT, M8X 40 PLATED	3							
34	1	124160-01751	CAP, FILLER	1							
35	1	119718-11380	BONNET ASSY, HEAD	1							
36	2	119717-03031	PLATE, BAFFLE	1							
37	3	119717-03070	BAFFLE, BREATHER	1							
38	2	119717-03070	BAFFLE, BREATHER	2							
39	2	129006-03120	COVER, DIAPHRAGM	1							
41	2	119718-11310	GASKET, BONNET	1							
42	2	119717-11320	COVER, BONNET	1							
43	2	119717-11331	GASKET, BONNET COVER	1							
44	2	22857-500100	SCREW, 5X10	4							
45	2	22857-500100	SCREW, 5X10	4							
46	2	22857-500160	SCREW, 5X16	2							
47	2	24341-000400	O-RING, 1AS40.0	1							
48	1	24311-000320	O-RING, 1AP32.0	1							
49	1	26106-060202	BOLT, M6X 20 PLATED	3							
50	1	26106-060752	BOLT, M6X 75 PLATED	6							
51	1	119226-07900	LIFTER, ENGINE	1							
52	1	26106-080162	BOLT, M8X 16 PLATED	2							
53	1	119718-07950	LIFTER	1							
54	1	26106-080162	BOLT, M8X 16 PLATED	2							
55	1	119718-77801	PLUG, GLOW	3							
56	1	119717-77852	CONNECTOR, GLOW PLUG	1							
57	1	119717-11800	GUIDE, VALVE	6							1

Remarks
(1)Spare parts.

N:Old $\frac{\text{Yes}}{\text{No}}$ New. Q:Old $\frac{\text{No}}{\text{Yes}}$ New. R:Old $\frac{\text{Yes}}{\text{Yes}}$ New. S:Old $\frac{\text{No}}{\text{No}}$ New. W:Add. Z:Discontinued. F:Interchangeable by set. K:Q'ty Change

Copyright (C) 2019 YANMAR CO., LTD. All RightsReserved.

Fig.5. EXHAUST MANIFOLD

(A)=3TNV76-XMR1
(B)=
(C)=
(D)=
(E)=
(F)=

No.	Lev.	Parts No.	Description	Q'ty (A)	(B)	(C)	(D)	(E)	(F)	I	R
1	1	119718-13100	MANIFOLD, EXHAUST	1							
2	1	119717-13110	GASKET, MANIFOLD	1							
3	1	119717-13600	STUD, M8X50	2							
4	1	129E00-13610	BOLT, M8X50 10.9	4							
5	1	119131-18320	STUD, M8X22	4							
6	1	26306-080002	NUT, M8	2							

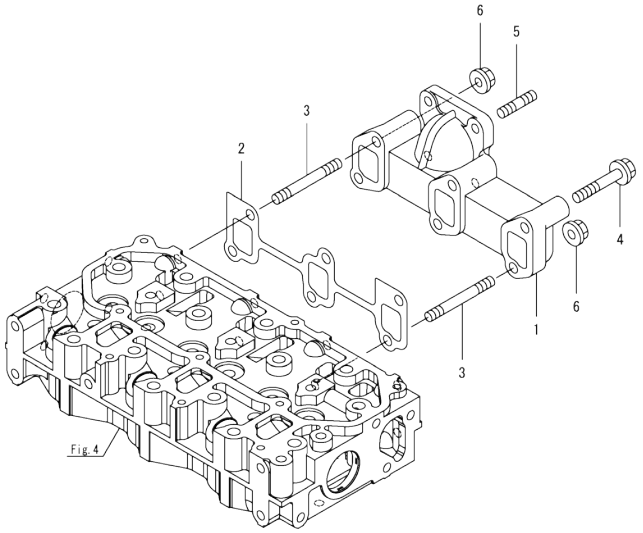

N:Old ◄Yes/No► New. Q:Old ◄No/Yes► New. R:Old ◄Yes/Yes► New. S:Old ◄No/No► New. W:Add. Z:Discontinued. F:Interchangeable by set. K:Q'ty Change

Copyright (C) 2019 YANMAR CO., LTD. All RightsReserved.

Fig.6. CAMSHAFT & DRIVING GEAR

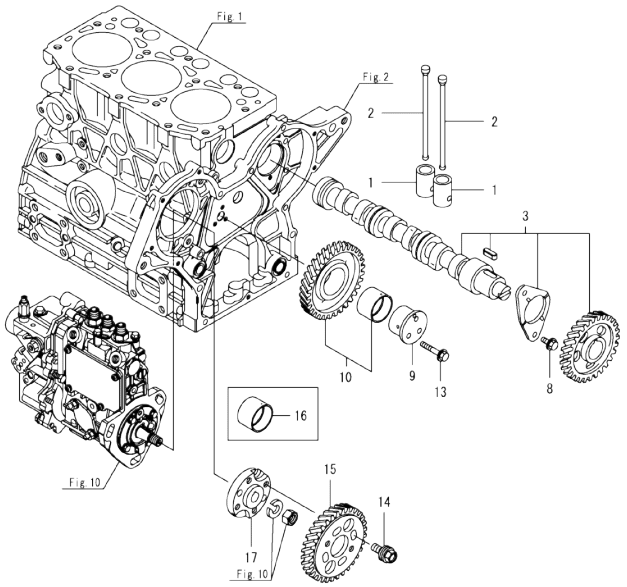

(A)=3TNV76-XMR1
(B)=
(C)=
(D)=
(E)=
(F)=

No.	Lev.	Parts No.	Description	Q'ty (A)	(B)	(C)	(D)	(E)	(F)	I	R
1	1	119620-14200	TAPPET	6							
2	1	119717-14400	ROD, PUSH	6							
3	1	119717-14581	CAMSHAFT ASSY	1							
8	1	26106-060122	BOLT, M6X 12 PLATED	2							
9	1	119717-25050	SHAFT, IDLE GEAR	1							
10	1	119717-25101	GEAR ASSY, IDLE	1							
13	1	26106-060352	BOLT, M6X 35 PLATED	3							
14	1	129150-25301	BOLT, INJECTION PUMP	4							
15	1	119717-25930	GEAR, PUMP	1							
16	1	119717-25911	BUSH, IDLE GEAR	1							1
17	1	119717-51150	FLANGE, CAMSHAFT	1							

Remarks
(1)Spare parts.

N:Old $\xleftarrow[\text{No}]{\text{Yes}}$ New. Q:Old $\xleftarrow[\text{Yes}]{\text{No}}$ New. R:Old $\xleftarrow[\text{Yes}]{\text{Yes}}$ New. S:Old $\xleftarrow[\text{No}]{\text{No}}$ New. W:Add. Z:Discontinued. F:Interchangeable by set. K:Q'ty Change

Copyright (C) 2019 YANMAR CO., LTD. All RightsReserved.

Fig.7. CRANKSHAFT & PISTON

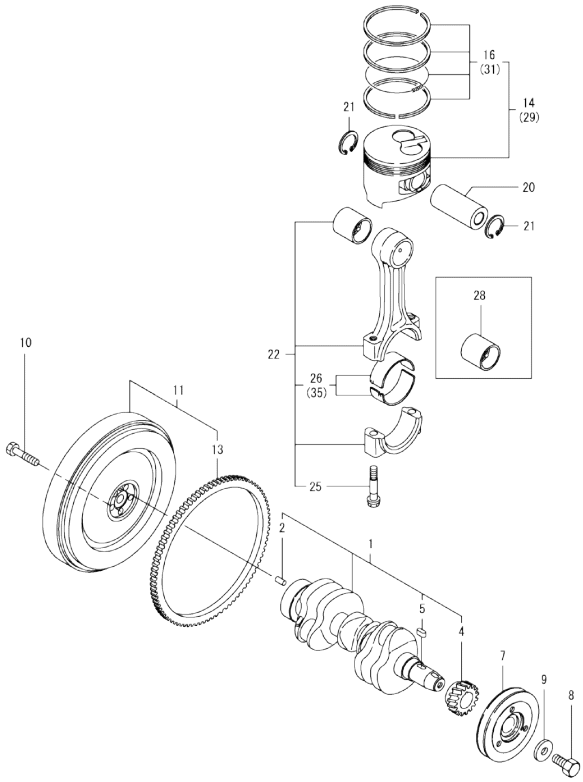

(A)=3TNV76-XMR1
(B)=
(C)=
(D)=
(E)=
(F)=

No.	Lev.	Parts No.	Description	Q'ty (A)	(B)	(C)	(D)	(E)	(F)	I	R
1	1	119717-21700	CRANKSHAFT ASSY	1							
2	2	129100-01580	PIN, PARALLEL 8X16	1							
4	2	119717-21200	GEAR, CRANKSHAFT	1							
5	2	22512-040120	KEY, 4X 12	1							
7	1	119717-21650	V-PULLEY, CRANKSHAFT	1							
8	1	119621-21681	BOLT, FLANGE 12X1.25	1							
9	1	119620-21941	WASHER, 12	1							
10	1	121111-21501	BOLT, FLYWHEEL	5							
11	1	119717-21580	FLYWHEEL ASSY	1							
13	2	119865-21600	GEAR, RING Z=116	1							
14	1	119718-22080	PISTON ASSY	3							
16	2	119717-22500	RING SET, PISTON	3							
20	1	119717-22300	PIN, PISTON	3							
21	1	22252-000220	RING, 22	6							
22	1	119717-23001	ROD ASSY, CONNECTING	3							
25	2	119717-23200	BOLT, CONNECTING ROD	6							
26	2	119717-23601	METAL ASSY,CRANK PIN	3							
28	1	119717-23910	METAL, PISTON PIN	3							1
29	1	119718-22090	PISTON ASSY, 0.25 OS	3							3
31	2	119717-22550	RING SET, PISTON .25	3							3
35	1	119717-23611	METAL ASSY, PIN .25	3							2

Remarks
(1)Spare parts.
(2)Under-sized(U.S.=0.25) parts.
(3)Over-sized(O.S.=0.25) parts.

N:Old ←Yes/No→ New. Q:Old ←No/Yes→ New, R:Old ←Yes/Yes→ New. S:Old ←No/No→ New. W:Add. Z:Discontinued. F:Interchangeable by set. K:Q'ty Change

Copyright (C) 2019 YANMAR CO., LTD. All RightsReserved.

Fig.8. LUB. OIL SYSTEM

(A)=3TNV76-XMR1
(B)=
(C)=
(D)=
(E)=
(F)=

No.	Lev.	Parts No.	Description	Q'ty (A)	(B)	(C)	(D)	(E)	(F)	I	R
1	1	121520-34810	GUIDE, DIPSTICK	1							
2	1	119717-34870	DIPSTICK, OIL	1							
3	1	119717-35140	STUD	1							
4	1	119660-35150	FILTER ASSY, D80XL75	1							
5	2	124450-35110	O-RING, OIL FILTER	1							
6	1	119717-32070	O-RING, P13.0	1							
7	1	119717-35070	PIPE ASSY, OIL INLET	1							
8	1	26106-080162	BOLT, M8X 16 PLATED	3							
9	1	114250-39450	SWITCH, HYDRAULIC	1							
10	1	119717-39210	PIPE, PUMP	1							
11	1	129005-59830	BOLT ASSY, JOINT M8	2							
12	2	22190-080002	WASHER, SEAL 8	2							
13	2	23857-030000	BOLT, JOINT 3	2							
14	1	22190-080002	WASHER, SEAL 8	2							

N:Old $\xleftarrow[\text{No}]{\text{Yes}}$ New. Q:Old $\xleftarrow[\text{Yes}]{\text{No}}$ New. R:Old $\xleftarrow[\text{Yes}]{\text{Yes}}$ New. S:Old $\xleftarrow[\text{No}]{\text{No}}$ New. W:Add. Z:Discontinued. F:Interchangeable by set. K:Q'ty Change

Copyright (C) 2019 YANMAR CO., LTD. All RightsReserved.

Fig.9. COOLING WATER SYSTEM

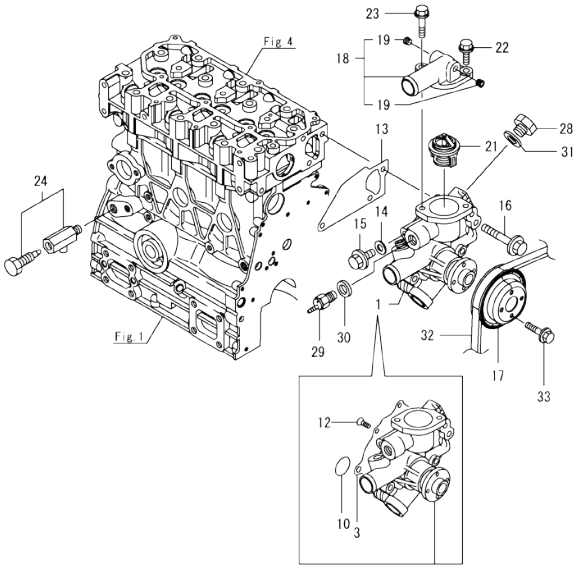

(A)=3TNV76-XMR1
(B)=
(C)=
(D)=
(E)=
(F)=

No.	Lev.	Parts No.	Description	Q'ty (A)	(B)	(C)	(D)	(E)	(F)	I	R
1	1	119E10-42001	PUMP ASSY, CW	1							
3	2	119717-42031	GASKET, WATER PUMP	1							
10	2	119C10-42320	O-RING, 2028	1							
12	2	26577-060122	SCREW, M6X12	4							
13	1	119717-42020	GASKET, WATER PUMP	1							
14	1	23414-080000	GASKET, 8X1.0	1							
15	1	26106-080122	BOLT, M8X 12 PLATED	1							
16	1	26106-080502	BOLT, M8X 50 PLATED	3							
17	1	119717-42350	V-PULLEY, PUMP D=100	1							
18	1	119718-49550	COVER ASSY	1							
19	2	119285-01731	PLUG, SCREW NPT1/8	2							
21	1	119717-49800	THERMOSTAT, 71C	1							
22	1	26106-080202	BOLT, M8X 20 PLATED	1							
23	1	26106-080302	BOLT, M8X 30 PLATED	1							
24	1	119620-49290	COCK ASSY, 1/4	1							
28	1	121450-42450	PLUG, M16	1							
29	1	121250-44901	SWITCH, TEMPERATURE	1							
30	1	124465-44950	GASKET, 16	1							
31	1	124465-44950	GASKET, 16	1							
32	1	129612-42310	V-BELT, A36.5	1							
33	1	26106-060122	BOLT, M6X 12 PLATED	4							

N:Old ←Yes/No→ New. Q:Old ←No/Yes→ New. R:Old ←Yes/Yes→ New. S:Old ←No/No→ New. W:Add. Z:Discontinued. F:Interchangeable by set. K:Q'ty Change

Copyright (C) 2019 YANMAR CO., LTD. All RightsReserved.

Fig.10. FUEL INJECTION PUMP

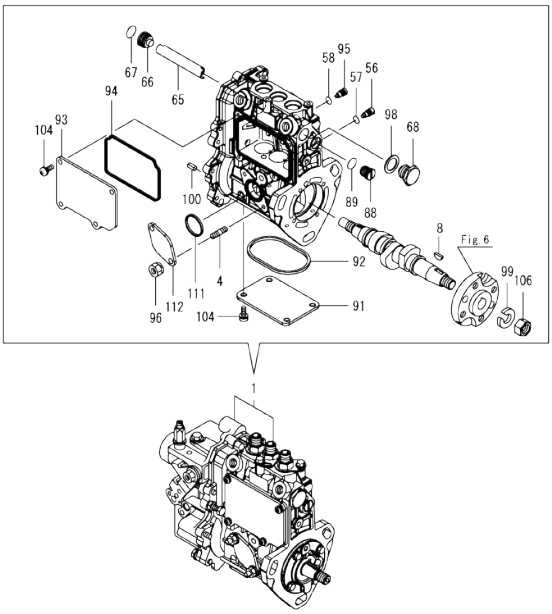

(A)=3TNV76-XMR1
(B)=
(C)=
(D)=
(E)=
(F)=

No.	Lev.	Parts No.	Description	Q'ty (A)	(B)	(C)	(D)	(E)	(F)	I	R
1	1	719717-51401	PUMP ASSY, INJECTION	1							1
4	2	129155-51020	STUD	2							
8	2	122710-51090	KEY, FEATHER	1							
56	2	158600-51270	STOPPER, TAPPET	3							
57	2	129155-51280	O-RING, S6	3							
58	2	129155-51280	O-RING, S6	1							
65	2	129155-51400	PROTECTOR	1							
66	2	158600-51410	PLUG, DEFLIFTER M12	1							
67	2	119717-51420	O-RING	1							
68	2	158600-51420	PLUG, DEFLIFTER M16	1							
88	2	158600-51570	PLUG, RACK	1							
89	2	129155-51580	O-RING	1							
91	2	129155-51701	COVER, PUMP BOTTOM	1							
92	2	119717-51711	GASKET, PUMP	1							
93	2	119717-51750	COVER, BODY SIDE	1							
94	2	119717-51761	GASKET, PUMP COVER	1							
95	2	158600-51790	STOPPER, RACK	1							
96	2	119717-51860	NUT, M6	2							
98	2	22190-160002	WASHER, SEAL 16	1							
99	2	22217-120000	WASHER, SPRING 12	1							
100	2	22351-050010	PIN, SPRING 5.0X10	2							
104	2	26022-050122	SCREW, M5X12	8							
106	2	26716-120002	NUT, M12	1							
111	2	129155-52051	GASKET, PUMP COVER	1							
112	2	129100-52200	COVER, FEED PUMP	1							

Remarks
(1)Governor(Fig.11) is incorporated in this Fuel Injection Pump(No.1).

N:Old ◄Yes/No► New, Q:Old ◄No/Yes► New, R:Old ◄Yes/Yes► New, S:Old ◄No/No► New, W:Add, Z:Discontinued, F:Interchangeable by set, K:Q'ty Change

Copyright (C) 2019 YANMAR CO., LTD. All RightsReserved.

Fig.11. GOVERNOR

(A)=3TNV76-XMR1
(B)=
(C)=
(D)=
(E)=
(F)=

No.	Lev.	Parts No.	Description	Q'ty (A)	(B)	(C)	(D)	(E)	(F)	I	R
2	2	119717-51930	PLUG, M10	1							
3	2	119717-61050	GASKET, CASE	1							
4	2	119717-61060	COVER, GOVERNOR CASE	1							
5	2	119717-61070	GASKET, COVER	1							
7	2	129155-51280	O-RING, S6	1							
22	2	119515-61440	LEVER, CONTROL	1							
60	2	158552-61700	SHIM SET	1							
65	2	119660-61901	STOPPER, SHAFT	1							
69	2	26106-060102	BOLT, M6X 10 PLATED	1							
70	2	26366-080002	NUT, M8	1							
77	2	171353-61461	BOLT, IDLE	1							
78	2	158552-61900	O-RING	1							
80	2	22190-100002	WASHER, SEAL 10	1							
82	2	22372-040000	PIN, SNAP 4	1							
83	2	26106-060102	BOLT, M6X 10 PLATED	4							
84	2	26106-060142	BOLT, M6X 14 PLATED	2							
85	2	26106-060202	BOLT, M6X 20 PLATED	4							
86	2	26106-060452	BOLT, M6X 45 PLATED	3							
87	2	119740-61470	NUT	1							
121	2	129636-77960	SOLENOID, STOP	1							

Remarks
* This figure(Governor) is incorporated in the Fuel Injection Pump(Fig.10).

N:Old ◄Yes/No► New. Q:Old ◄No/Yes► New. R:Old ◄Yes/Yes► New. S:Old ◄No/No► New. W:Add. Z:Discontinued. F:Interchangeable by set. K:Q'ty Change

Copyright (C) 2019 YANMAR CO., LTD. All RightsReserved.

Fig.12. FUEL INJECTION VALVE

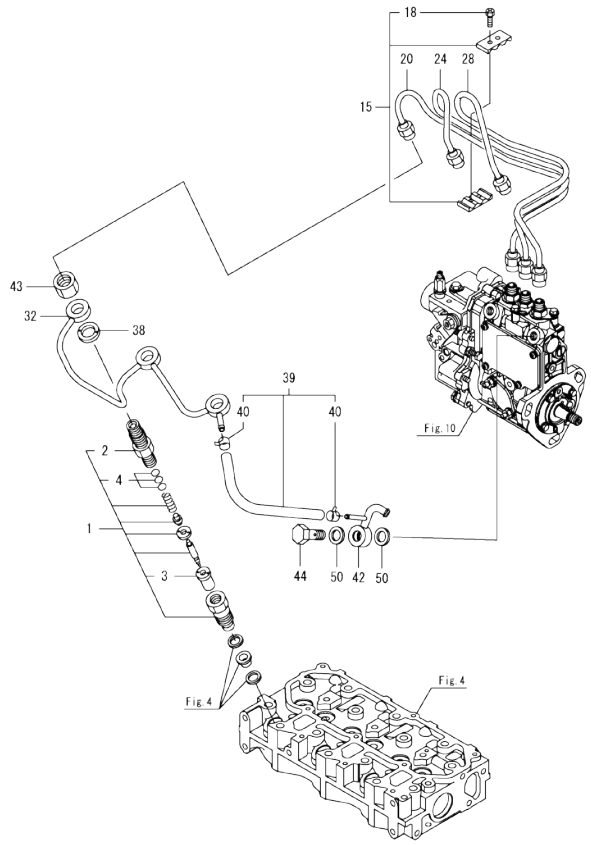

(A)=3TNV76-XMR1
(B)=
(C)=
(D)=
(E)=
(F)=

No.	Lev.	Parts No.	Description	Q'ty (A)	(B)	(C)	(D)	(E)	(F)	I	R
1	1	119717-53001	VALVE ASSY,INJECTION	3							
2	2	118200-53010	HOLDER, NOZZLE	3							
3	2	119717-53010	VALVE ASSY,INJECTION	3							
4	2	129901-53800	SHIM SET, ADJUSTING	3							1
15	1	129150-59120	RETAINER, PIPE	1							
18	2	129150-59131	BOLT, M4X14	2							
20	1	119717-59810	PIPE, INJECTION NO.1	1							
24	1	119717-59820	PIPE, INJECTION NO.2	1							
28	1	119717-59830	PIPE, INJECTION NO.3	1							
32	1	119717-59510	PIPE ASSY, RETURN	1							
38	1	129901-59560	GASKET, FUEL RETURN	3							
39	1	119540-59570	HOSE ASSY, RETURN	1							
40	2	124066-59100	CLAMP, HOSE 8	2							
42	1	119515-59581	JOINT, OVERFLOW	1							
43	1	119620-59700	NUT, NOZZLE RETURN	3							
44	1	119813-59950	VALVE ASSY, CHECK	1							
50	1	22190-120002	WASHER, SEAL 12	2							

Remarks
(1)Spare parts.

N:Old $\frac{\text{Yes}}{\text{No}}$ New. Q:Old $\frac{\text{No}}{\text{Yes}}$ New. R:Old $\frac{\text{Yes}}{\text{Yes}}$ New. S:Old $\frac{\text{No}}{\text{No}}$ New. W:Add. Z:Discontinued. F:Interchangeable by set. K:Q'ty Change

Copyright (C) 2019 YANMAR CO., LTD. All RightsReserved.

Fig.13. FUEL PIPE

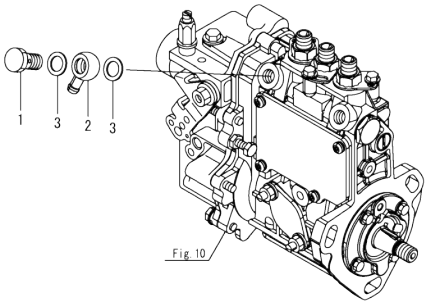

(A)=3TNV76-XMR1
(B)=
(C)=
(D)=
(E)=
(F)=

No.	Lev.	Parts No.	Description	Q'ty (A)	(B)	(C)	(D)	(E)	(F)	I	R
1	1	103854-39140	BOLT, PIPE JOINT	1							
2	1	101304-59020	JOINT, PIPE 12	1							
3	1	22190-120002	WASHER, SEAL 12	2							

N:Old ◄Yes/No► New. Q:Old ◄No/Yes► New. R:Old ◄Yes/Yes► New. S:Old ◄No/No► New. W:Add. Z:Discontinued. F:Interchangeable by set. K:Q'ty Change

Copyright (C) 2019 YANMAR CO., LTD. All RightsReserved.

Fig.14. STARTER MOTOR

(A)=3TNV76-XMR1
(B)=
(C)=
(D)=
(E)=
(F)=

No.	Lev.	Parts No.	Description	Q'ty (A)	(B)	(C)	(D)	(E)	(F)	I	R
1	1	119740-77020	STARTER, RA1.4	1							
2	2	X0283060061	ROLLER	5							
3	2	129129-77460	SCREW	2							
4	2	X9490561370	NUT	1							
5	2	X9491200240	BALL, STEEL	1							
6	2	129407-77210	YOKE ASSY	1							
7	2	129407-77220	ARMATURE ASSY	1							
8	3	129129-77230	BEARING, BALL	1							
9	3	129129-77240	BEARING, BALL	1							
10	2	X1280996680	STARTER KIT	1							
11	3	X0280210230	NUT, PINION STOP	1							
12	3	X0283270140	RETAINER, SNAP	1							
13	3	129129-77390	CLUTCH ASSY, STARTER	1							
14	4	129129-77440	BEARING, BALL	1							
15	4	129129-77450	BEARING, BALL	1							
16	3	129129-77400	SHAFT, STARTER	1							
17	3	129129-77410	SPRING, COIL	1							
18	3	129407-77410	SPRING, COIL	1							
19	3	X0283712350	PINION, STARTER	1							
20	3	129129-77430	RING, SNAP	1							
21	2	129129-77260	RETAINER	1							
22	2	129129-77270	PINION	1							
23	2	X4284003310	HOUSING	1							
24	2	129407-77290	FRAME	1							
25	2	129407-77300	HOLDER ASSY	1							
26	3	X9491730461	SPRING, BRUSH	4							
27	2	X1534004151	SWITCH ASSY	1							
28	2	129129-77320	BOLT, W/WASHER	2							
29	2	129407-77330	BOLT	2							
30	2	129129-77340	SPRING	1							
31	2	129129-77350	O-RING	2							
32	2	129129-77362	COVER	1							
34	2	129129-77380	CAP	1							
35	1	26106-100252	BOLT, M10X 25 PLATED	2							

N:Old ←Yes/No→ New. Q:Old ←No/Yes→ New. R:Old ←Yes/Yes→ New. S:Old ←No/No→ New. W:Add. Z:Discontinued. F:Interchangeable by set. K:Q'ty Change

Copyright (C) 2019 YANMAR CO., LTD. All RightsReserved.

Fig.15. TENSION PULLEY

(A)=3TNV76-XMR1
(B)=
(C)=
(D)=
(E)=
(F)=

No.	Lev.	Parts No.	Description	Q'ty (A)	(B)	(C)	(D)	(E)	(F)	I	R
1	1	119717-44320	TENSION DEVICE ASSY	1							
2	2	119717-42330	LEVER ASSY, TENSION	1							
5	2	129636-42570	WASHER, PLAIN 10	1							
6	2	119717-42580	SPACER	1							
7	2	129636-42590	PULLEY ASSY, TENSION	1							
11	2	22217-100000	WASHER, SPRING 10	1							
12	2	26106-100552	BOLT, M10X 55 PLATED	1							
13	2	26706-100002	NUT, M10	1							
14	1	26106-100452	BOLT, M10X 45 PLATED	1							
15	1	119717-77360	ADJUSTER, BELT	1							
16	1	26106-080202	BOLT, M8X 20 PLATED	1							
17	1	26106-080352	BOLT, M8X 35 PLATED	1							
18	1	119624-77351	BLOCK ASSY, ADJUSTER	1							
20	2	26106-081004	BOLT, M8X100 PLATED	1							
21	2	26306-080002	NUT, M8	1							

N:Old ◄Yes/No► New. Q:Old ◄No/Yes► New. R:Old ◄Yes/Yes► New. S:Old ◄No/No► New. W:Add. Z:Discontinued. F:Interchangeable by set. K:Q'ty Change

Copyright (C) 2019 YANMAR CO., LTD. All RightsReserved.

Fig.16. ACCESSORY

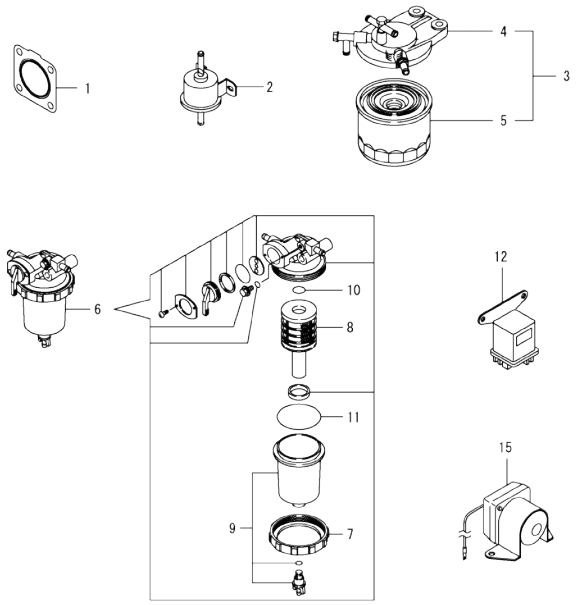

(A)=3TNV76-XMR1
(B)=
(C)=
(D)=
(E)=
(F)=

No.	Lev.	Parts No.	Description	Q'ty (A)	(B)	(C)	(D)	(E)	(F)	I	R
1	1	119515-13200	GASKET, SILENCER	1							
2	1	129612-52100	PUMP, FUEL FEED	1							
3	1	129940-55601	FILTER ASSY, FUEL	1							
4	2	129004-55612	BRACKET, FILTER	1							
5	2	119802-55801	FILTER, FUEL	1							
6	1	119802-55700	SEPARATOR ASSY,WATER	1							
7	2	129100-55690	NUT, RETAINING	1							
8	2	119802-55710	ELEMENT, FUEL	1							
9	2	119802-55730	CUP ASSY, SEPARATOR	1							
10	2	24311-000160	O-RING, 1AP16.0	1							
11	2	24321-000650	O-RING, 1AG65.0	1							
12	1	119650-77911	RELAY ASSY, GLOW	1							
15	1	129100-77910	RELAY, MAGNET	2							

N:Old ◄Yes/No► New. Q:Old ◄No/Yes► New, R:Old ◄Yes/Yes► New, S:Old ◄No/No► New, W:Add, Z:Discontinued, F:Interchangeable by set, K:Q'ty Change

Copyright (C) 2019 YANMAR CO., LTD. All RightsReserved.

Fig.17. GASKET SET

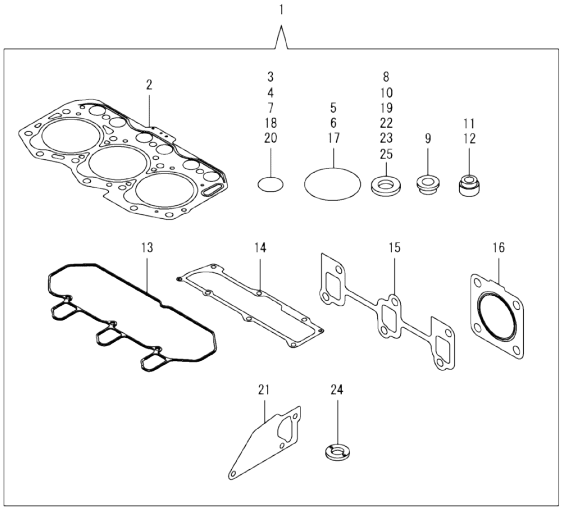

(A)=3TNV76-XMR1
(B)=
(C)=
(D)=
(E)=
(F)=

No.	Lev.	Parts No.	Description	Q'ty (A)	(B)	(C)	(D)	(E)	(F)	I	R
1	1	119747-92600	GASKET SET	1							1
2	2	119717-01331	GASKET, HEAD	1							
3	2	119624-32040	O-RING, P12.0	1							
4	2	119717-32050	O-RING, P17.0	3							
5	2	121850-51960	O-RING, FUEL PUMP	1							
6	2	24311-000320	O-RING, 1AP32.0	2							
7	2	24341-000240	O-RING, 1AS24.0	1							
8	2	22190-160002	WASHER, SEAL 16	1							
9	2	129901-11450	PROTECTOR, NOZZLE	3							
10	2	119600-11460	GASKET, NOZZLE	6							
11	2	119717-11340	SEAL, VALVE STEM	3							
12	2	119717-11350	SEAL, VALVE STEM	3							
13	2	119718-11310	GASKET, BONNET	1							
14	2	119717-11331	GASKET, BONNET COVER	1							
15	2	119717-13110	GASKET, MANIFOLD	1							
16	2	119515-13200	GASKET, SILENCER	1							
17	2	124450-35110	O-RING, OIL FILTER	1							
18	2	119717-32060	O-RING, P15.0	1							
19	2	22190-080002	WASHER, SEAL 8	4							
20	2	119C10-42320	O-RING, 2028	1							
21	2	119717-42020	GASKET, WATER PUMP	1							
22	2	23414-080000	GASKET, 8X1.0	1							
23	2	124465-44950	GASKET, 16	2							
24	2	129901-59560	GASKET, FUEL RETURN	3							
25	2	22190-120002	WASHER, SEAL 12	4							

Remarks
(1)Optional parts.

N:Old $\frac{\text{Yes}}{\text{No}}$ New. Q:Old $\frac{\text{No}}{\text{Yes}}$ New. R:Old $\frac{\text{Yes}}{\text{Yes}}$ New. S:Old $\frac{\text{No}}{\text{No}}$ New. W:Add. Z:Discontinued. F:Interchangeable by set. K:Q`ty Change

Copyright (C) 2019 YANMAR CO., LTD. All RightsReserved.

Parts No. Index

Parts No.	Fig. No.	Ref. No.
101304-59020	13	2
103854-39140	13	1
105010-11490	4	3
105311-01090	1	5
105425-01690	3	16
106760-01770	3	8
114250-39450	8	9
118200-53010	12	2
119131-18320	5	5
119226-07900	4	51
119285-01731	9	19
119285-01990	1	8
119285-11990	4	11
119515-13200	16	1
	17	16
119515-59581	12	42
119515-61440	11	22
119540-59570	12	39
119600-11460	4	2
	17	10
119620-01750	3	3
119620-02020	1	9
119620-11280	4	26
119620-14200	6	1
119620-21941	7	9
119620-49290	9	24
119620-59700	12	43
119621-21681	7	8
119623-01250	1	6
119624-32040	2	18
	17	3
119624-77351	15	18
119650-77911	16	12
119660-01911	2	17
119660-35150	8	4
119660-61901	11	65
119717-01331	1	27
	17	2
119717-01501	2	1
119717-01521	2	5
119717-01570	2	2
119717-01660	3	2
119717-01750	2	16
119717-01800	2	7
119717-01830	3	9
119717-01880	3	15
119717-02411	1	12
119717-02930	1	23
119717-03031	4	36
119717-03070	4	37

Parts No.	Fig. No.	Ref. No.
119717-03070	4	38
119717-11101	4	13
119717-11110	4	14
119717-11131	4	15
119717-11190	4	17
119717-11200	4	21
119717-11240	4	22
119717-11260	4	25
119717-11320	4	42
119717-11331	4	43
	17	14
119717-11340	4	18
	17	11
119717-11350	4	19
	17	12
119717-11650	4	27
119717-11740	4	4
119717-11800	4	57
119717-13110	5	2
	17	15
119717-13600	5	3
119717-14400	6	2
119717-14581	6	3
119717-21200	7	4
119717-21580	7	11
119717-21650	7	7
119717-21700	7	1
119717-22300	7	20
119717-22500	7	16
119717-22550	7	31
119717-23001	7	22
119717-23200	7	25
119717-23601	7	26
119717-23611	7	35
119717-23910	7	28
119717-25050	6	9
119717-25101	6	10
119717-25911	6	16
119717-25930	6	15
119717-32050	2	19
	17	4
119717-32060	17	18
119717-32070	8	6
119717-32080	2	9
119717-32100	2	8
119717-32110	2	13
119717-32120	2	14
119717-34870	8	2
119717-35070	8	7
119717-35140	8	3

Parts No.	Fig. No.	Ref. No.
119717-39210	8	10
119717-42020	9	13
	17	21
119717-42031	9	3
119717-42330	15	2
119717-42350	9	17
119717-42580	15	6
119717-44320	15	1
119717-49800	9	21
119717-51150	6	17
119717-51420	10	67
119717-51711	10	92
119717-51750	10	93
119717-51761	10	94
119717-51860	10	96
119717-51930	11	2
119717-53001	12	1
119717-53010	12	3
119717-59510	12	32
119717-59810	12	20
119717-59820	12	24
119717-59830	12	28
119717-61050	11	3
119717-61060	11	4
119717-61070	11	5
119717-77360	15	15
119717-77852	4	56
119718-01740	3	7
119718-07950	4	53
119718-11310	4	41
	17	13
119718-11380	4	35
119718-13100	5	1
119718-22080	7	14
119718-22090	7	29
119718-49550	9	18
119718-77801	4	55
119734-01590	2	3
119734-02220	3	6
119740-61470	11	87
119740-77020	14	1
119747-92600	17	1
119802-32130	2	15
119802-55700	16	6
119802-55710	16	8
119802-55730	16	9
119802-55801	16	5
119810-01200	1	26
119810-02941	1	34
119813-59950	12	44

Parts No.	Fig. No.	Ref. No.
119865-21600	7	13
119C10-42320	9	10
	17	20
119E10-42001	9	1
121111-21501	7	10
121250-44901	9	29
121450-42450	9	28
121520-34810	8	1
121850-51960	2	20
	17	5
122710-51090	10	8
124060-01050	1	4
124066-59100	12	40
124085-01771	3	12
124160-01751	2	28
	4	34
124160-01910	1	7
124450-35110	8	5
	17	17
124465-44950	9	30
		31
	17	23
129001-32320	2	11
129001-32330	2	12
129004-55612	16	4
129005-59830	8	11
129006-03120	4	39
129100-01580	3	1
	7	2
129100-52200	10	112
129100-55690	16	7
129100-77910	16	15
129129-77230	14	8
129129-77240	14	9
129129-77260	14	21
129129-77270	14	22
129129-77320	14	28
129129-77340	14	30
129129-77350	14	31
129129-77362	14	32
129129-77380	14	34
129129-77390	14	13
129129-77400	14	16
129129-77410	14	17
129129-77430	14	20
129129-77440	14	14
129129-77450	14	15
129129-77460	14	3
129150-11230	4	28
129150-11750	4	30

Parts No. Index

Parts No.	Fig. No.	Ref. No.
129150-25301	6	14
129150-59120	12	15
129150-59131	12	18
129155-51020	10	4
129155-51280	10	57
		58
	11	7
129155-51400	10	65
129155-51580	10	89
129155-51701	10	91
129155-52051	10	111
129407-77210	14	6
129407-77220	14	7
129407-77290	14	24
129407-77300	14	25
129407-77330	14	29
129407-77410	14	18
129508-11180	4	16
129612-42310	9	32
129612-52100	16	2
129636-42570	15	5
129636-42590	15	7
129636-77960	11	121
129900-32130	2	10
129901-11450	4	1
	17	9
129901-53800	12	4
129901-59560	12	38
	17	24
129940-55601	16	3
129E00-13610	5	4
158552-61700	11	60
158552-61900	11	78
158600-51270	10	56
158600-51410	10	66
158600-51420	10	68
158600-51570	10	88
158600-51790	10	95
171353-61461	11	77
22190-080002	8	12
		14
	17	19
22190-100002	11	80
22190-120002	12	50
	13	3
	17	25
22190-160002	3	19
	10	98
	17	8
22217-100000	15	11

Parts No.	Fig. No.	Ref. No.
22217-120000	10	99
22242-000120	4	31
22252-000220	7	21
22351-050010	10	100
22351-060012	4	20
22372-040000	11	82
22512-040120	7	5
22857-500100	4	44
		45
22857-500160	4	46
23414-080000	9	14
	17	22
23857-030000	8	13
23876-005000	4	12
23876-030000	2	6
24311-000160	16	10
24311-000180	3	20
24311-000320	2	29
	4	48
	17	6
24321-000650	16	11
24341-000240	17	7
24341-000400	4	47
26022-050122	10	104
26106-060102	11	69
		83
26106-060122	2	21
	6	8
	9	33
26106-060142	11	84
26106-060162	2	22
26106-060202	4	49
	11	85
26106-060352	6	13
26106-060402	2	23
		24
26106-060452	11	86
26106-060602	2	25
26106-060652	2	26
26106-060752	4	50
26106-080122	9	15
26106-080162	4	52
		54
	8	8
26106-080202	9	22
	15	16
26106-080252	3	21
26106-080302	9	23
26106-080352	3	22
	15	17

Parts No.	Fig. No.	Ref. No.
26106-080402	4	33
26106-080502	9	16
26106-080702	3	23
26106-081004	15	20
26106-081202	3	24
26106-100252	14	35
26106-100452	15	14
26106-100552	15	12
26206-100252	3	4
26206-100302	3	5
26306-080002	2	27
	5	6
	15	21
26366-080002	11	70
26577-060122	9	12
26706-100002	15	13
26716-120002	10	106
26979-050162	4	32
27241-120000	1	13
719717-01561	1	1
719717-02901	1	28
719717-02911	1	31
719717-51401	10	1
719734-01500	2	4
X0280210230	14	11
X0283060061	14	2
X0283270140	14	12
X0283712350	14	19
X1280996680	14	10
X1534004151	14	27
X4284003310	14	23
X9490561370	14	4
X9491200240	14	5
X9491730461	14	26

Parts No.	Fig. No.	Ref. No.