YANMAR

# PARTS CATALOG

0CD50-M05190EN

Last update Sep., 2020

# PREFACE

This parts catalog is the 1st edition of 3TNV76-XPSZ for Supercool.

Published : July, 2019

# Contents

0CD50-M05190


| Fig. No. | Fig. Name |
|---|---|
| ENGINE | |
| 1. | CYLINDER BLOCK |
| 2. | GEAR HOUSING |
| 3. | MOUNTING FLANGE & OIL SUMP |
| 4. | CYLINDER HEAD & BONNET |
| 5. | EXHAUST MANIFOLD |
| 6. | CAMSHAFT & DRIVING GEAR |
| 7. | CRANKSHAFT & PISTON |
| 8. | LUB. OIL SYSTEM |
| 9. | COOLING WATER SYSTEM |
| 10. | FUEL INJECTION PUMP |
| 11. | GOVERNOR |
| 12. | FUEL INJECTION VALVE |
| 13. | FUEL PIPE |
| 14. | STARTER MOTOR |
| 15. | ACCESSORY |

# Fig.1. CYLINDER BLOCK

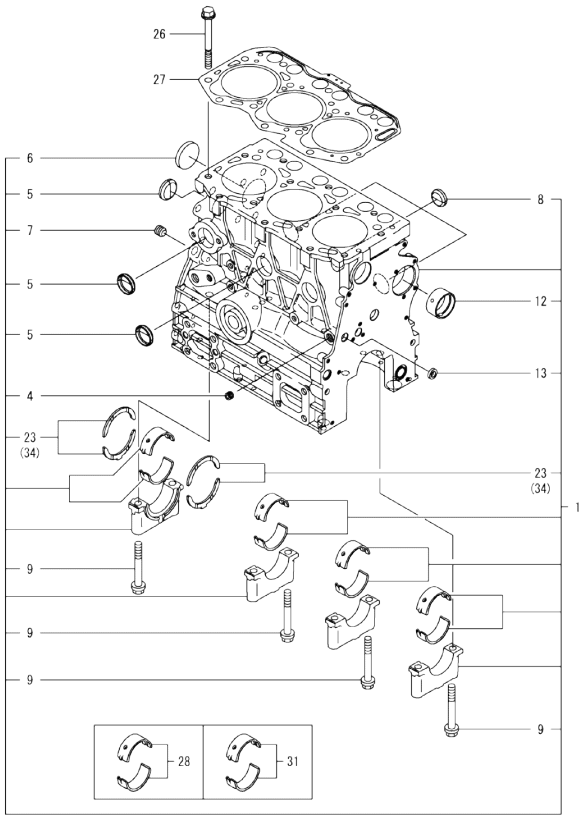


Remarks
(1)Spare parts.
(2)Under-sized(U.S.=0.25) parts.
(3)Over-sized(O.S.=0.25) parts.



(A)=3TNV76-XPSZ
(B)=
(C)=
(D)=
(E)=
(F)=

| No. | Lev. | Parts No. | Description | Q'ty (A) | (B) | (C) | (D) | (E) | (F) | I | R |
|---|---|---|---|---|---|---|---|---|---|---|---|
| 1 | 1 | 719717-01561 | BLOCK ASSY, CYLINDER | 1 | | | | | | | |
| 4 | 2 | 124060-01050 | PLUG, PT1/8 | 1 | | | | | | | |
| 5 | 2 | 105311-01090 | PLUG, 30 | 4 | | | | | | | |
| 6 | 2 | 119623-01250 | PLUG, 45 | 1 | | | | | | | |
| 7 | 2 | 124160-01910 | PLUG, PT1/4 | 1 | | | | | | | |
| 8 | 2 | 119285-01990 | PLUG, 25 | 3 | | | | | | | |
| 9 | 2 | 119620-02020 | BOLT, METAL CAP | 8 | | | | | | | |
| 12 | 2 | 119717-02411 | BUSH, CAMSHAFT | 1 | | | | | | | |
| 13 | 2 | 27241-120000 | PLUG, 12 | 1 | | | | | | | |
| 23 | 2 | 119717-02930 | METAL ASSY, THRUST | 2 | | | | | | | |
| 26 | 1 | 119810-01200 | BOLT, CYLINDER HEAD | 14 | | | | | | | |
| 27 | 1 | 119717-01331 | GASKET, HEAD | 1 | | | | | | | |
| 28 | 1 | 719717-02901 | METAL ASSY, MAIN | 4 | | | | | | | 1 |
| 31 | 1 | 719717-02911 | METAL ASSY, MAIN .25 | 4 | | | | | | | 2 |
| 34 | 1 | 119810-02941 | METAL ASSY, 0.25 OS | 2 | | | | | | | 3 |

N:Old ←Yes/No→ New. Q:Old ←No/Yes→ New, R:Old ←Yes/Yes→ New. S:Old ←No/No→ New. W:Add. Z:Discontinued. F:Interchangeable by set. K:Q'ty Change

Copyright (C) 2019 YANMAR GLOBAL CS CO., LTD. All RightsReserved.

# Fig.2. GEAR HOUSING

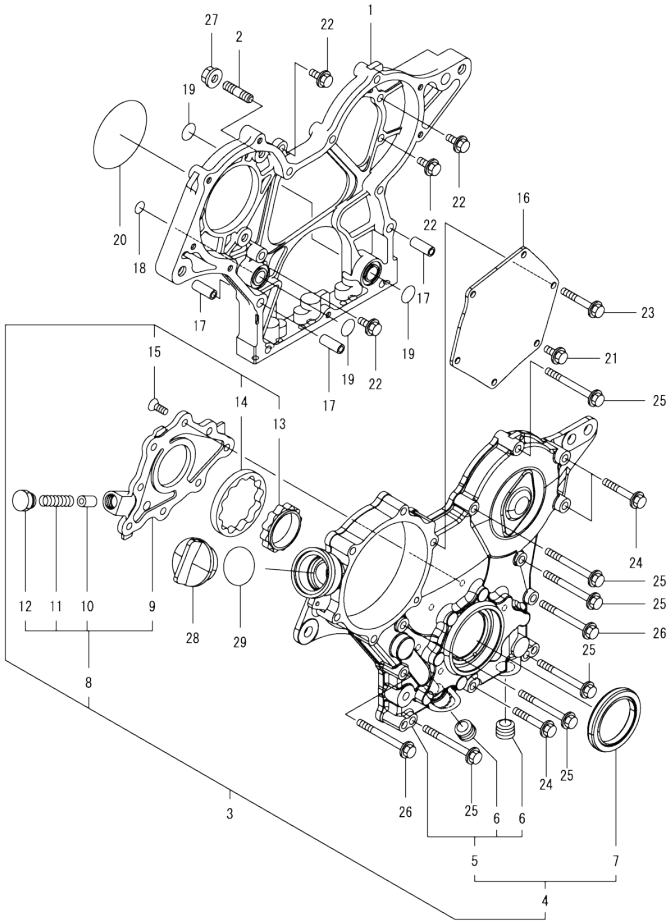




(A)=3TNV76-XPSZ
(B)=
(C)=
(D)=
(E)=
(F)=

| No. | Lev. | Parts No. | Description | Q'ty (A) | (B) | (C) | (D) | (E) | (F) | I | R |
|---|---|---|---|---|---|---|---|---|---|---|---|
| 1 | 1 | 119717-01501 | CASE, GEAR | 1 | | | | | | | |
| 2 | 1 | 119717-01570 | STUD | 3 | | | | | | | |
| 3 | 1 | 119734-01590 | COVER ASSY, CASE | 1 | | | | | | | |
| 4 | 2 | 719734-01500 | COVER ASSY, CASE | 1 | | | | | | | |
| 5 | 3 | 119717-01521 | COVER, GEAR CASE | 1 | | | | | | | |
| 6 | 4 | 23876-030000 | PLUG, R03 | 2 | | | | | | | |
| 7 | 3 | 119717-01800 | SEAL, OIL | 1 | | | | | | | |
| 8 | 2 | 119717-32100 | COVER ASSY, PUMP | 1 | | | | | | | |
| 9 | 3 | 119717-32080 | COVER, OIL PUMP | 1 | | | | | | | |
| 10 | 3 | 129900-32130 | VALVE, RELIEF | 1 | | | | | | | |
| 11 | 3 | 129001-32320 | SPRING | 1 | | | | | | | |
| 12 | 3 | 129001-32330 | PLUG | 1 | | | | | | | |
| 13 | 2 | 119717-32110 | ROTOR, INNER | 1 | | | | | | | |
| 14 | 2 | 119717-32120 | ROTOR, OUTER | 1 | | | | | | | |
| 15 | 2 | 119802-32130 | SCREW, M6X16 | 8 | | | | | | | |
| 16 | 1 | 119717-01750 | COVER, PUMP | 1 | | | | | | | |
| 17 | 1 | 119660-01911 | PIPE, KNOCK 6X17 | 4 | | | | | | | |
| 18 | 1 | 119624-32040 | O-RING, P12.0 | 1 | | | | | | | |
| 19 | 1 | 119717-32050 | O-RING, P17.0 | 3 | | | | | | | |
| 20 | 1 | 121850-51960 | O-RING, FUEL PUMP | 1 | | | | | | | |
| 21 | 1 | 26106-060122 | BOLT, M6X 12 PLATED | 1 | | | | | | | |
| 22 | 1 | 26106-060162 | BOLT, M6X 16 PLATED | 4 | | | | | | | |
| 23 | 1 | 26106-060402 | BOLT, M6X 40 PLATED | 4 | | | | | | | |
| 24 | 1 | 26106-060402 | BOLT, M6X 40 PLATED | 3 | | | | | | | |
| 25 | 1 | 26106-060602 | BOLT, M6X 60 PLATED | 7 | | | | | | | |
| 26 | 1 | 26106-060652 | BOLT, M6X 65 PLATED | 2 | | | | | | | |
| 27 | 1 | 26306-080002 | NUT, M8 | 3 | | | | | | | |
| 28 | 1 | 124160-01751 | CAP, FILLER | 1 | | | | | | | |
| 29 | 1 | 24311-000320 | O-RING, 1AP32.0 | 1 | | | | | | | |

N:Old ←Yes/No→ New. Q:Old ←No/Yes→ New. R:Old ←Yes/Yes→ New. S:Old ←No/No→ New. W:Add. Z:Discontinued. F:Interchangeable by set. K:Q'ty Change

Copyright (C) 2019 YANMAR GLOBAL CS CO., LTD. All RightsReserved.

# Fig.3. MOUNTING FLANGE & OIL SUMP

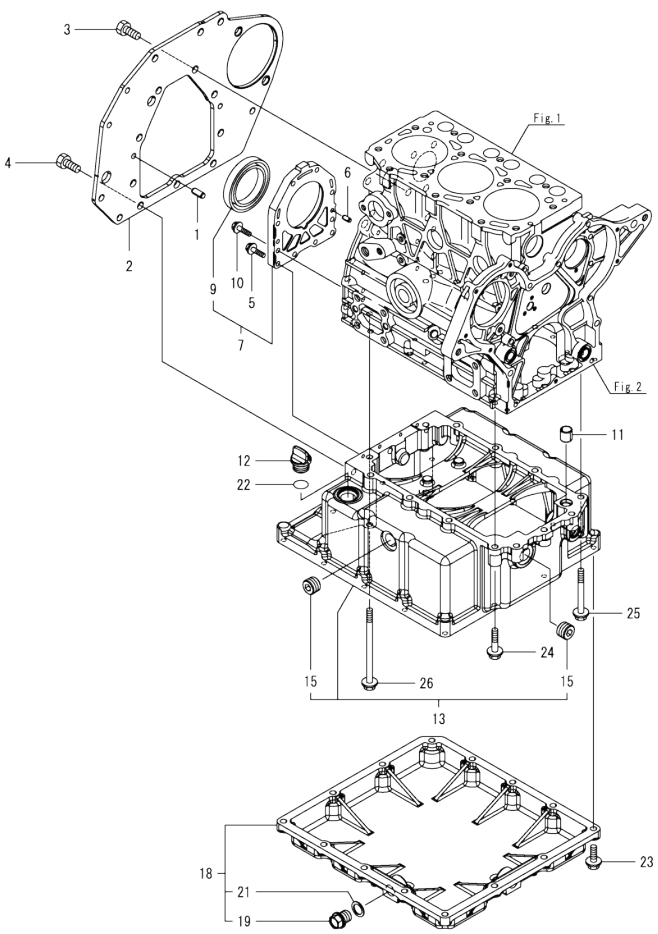




(A)=3TNV76-XPSZ (D)=
(B)= (E)=
(C)= (F)=

| No. | Lev. | Parts No. | Description | Q'ty (A) | (B) | (C) | (D) | (E) | (F) | I | R |
|---|---|---|---|---|---|---|---|---|---|---|---|
| 1 | 1 | 129100-01580 | PIN, PARALLEL 8X16 | 2 | | | | | | | |
| 2 | 1 | 119718-01600 | FLANGE, MOUNTING | 1 | | | | | | | |
| 3 | 1 | 26206-100202 | BOLT, M10X 20 PLATED | 7 | | | | | | | |
| 4 | 1 | 26206-100252 | BOLT, M10X 25 PLATED | 3 | | | | | | | |
| 5 | 1 | 119285-01580 | BOLT, M46X22 | 4 | | | | | | | |
| 6 | 1 | 119620-01620 | PIN, PARALLEL M6X10 | 2 | | | | | | | |
| 7 | 1 | 119718-01640 | CASE ASSY, OIL SEAL | 1 | | | | | | | |
| 9 | 2 | 119734-02220 | SEAL, OIL WHEEL SIDE | 1 | | | | | | | |
| 10 | 1 | 26106-060222 | BOLT, M6X 22 PLATED | 6 | | | | | | | |
| 11 | 1 | 119718-01740 | PIPE, KNOCK | 1 | | | | | | | |
| 12 | 1 | 106760-01770 | CAP, OIL SUPPLY | 1 | | | | | | | |
| 13 | 1 | 119715-01840 | OIL PAN ASSY, UPPER | 1 | | | | | | | |
| 15 | 2 | 124085-01771 | PLUG, NPT1/2 | 2 | | | | | | | |
| 18 | 1 | 119717-01880 | SUMP ASSY, OIL | 1 | | | | | | | |
| 19 | 2 | 105425-01690 | PLUG, DRAIN M16 | 2 | | | | | | | |
| 21 | 2 | 22190-160002 | WASHER, SEAL 16 | 2 | | | | | | | |
| 22 | 1 | 24311-000180 | O-RING, 1AP18.0 | 1 | | | | | | | |
| 23 | 1 | 26106-080252 | BOLT, M8X 25 PLATED | 14 | | | | | | | |
| 24 | 1 | 26106-080352 | BOLT, M8X 35 PLATED | 10 | | | | | | | |
| 25 | 1 | 26106-080702 | BOLT, M8X 70 PLATED | 1 | | | | | | | |
| 26 | 1 | 26106-081202 | BOLT, M8X120 PLATED | 2 | | | | | | | |

N:Old ←Yes/No→ New. Q:Old ←No/Yes→ New. R:Old ←Yes/Yes→ New. S:Old ←No/No→ New. W:Add. Z:Discontinued. F:Interchangeable by set. K:Q'ty Change

Copyright (C) 2019 YANMAR GLOBAL CS CO., LTD. All RightsReserved.

# Fig.4. CYLINDER HEAD & BONNET



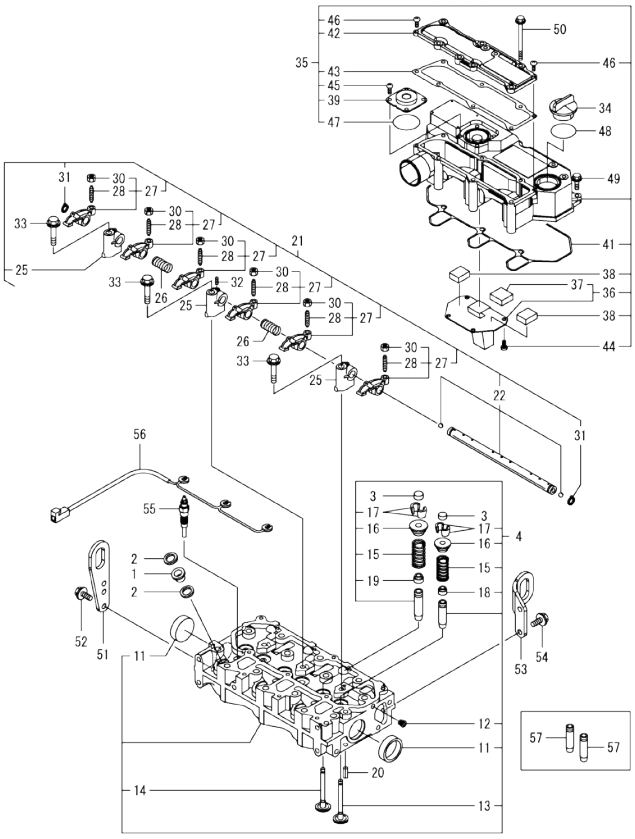


(A)=3TNV76-XPSZ
(B)=
(C)=
(D)=
(E)=
(F)=

| No. | Lev. | Parts No. | Description | Q'ty (A) | (B) | (C) | (D) | (E) | (F) | I | R |
|---|---|---|---|---|---|---|---|---|---|---|---|
| 1 | 1 | 129901-11450 | PROTECTOR, NOZZLE | 3 | | | | | | | |
| 2 | 1 | 119600-11460 | GASKET, NOZZLE | 6 | | | | | | | |
| 3 | 1 | 105010-11490 | CAP, VALVE | 6 | | | | | | | |
| 4 | 1 | 119717-11740 | HEAD ASSY, CYLINDER | 1 | | | | | | | |
| 11 | 2 | 119285-11990 | PLUG, 35 | 2 | | | | | | | |
| 12 | 2 | 23876-005000 | PLUG, R005 | 1 | | | | | | | |
| 13 | 2 | 119717-11101 | VALVE, INTAKE | 3 | | | | | | | |
| 14 | 2 | 119717-11110 | VALVE, EXHAUST | 3 | | | | | | | |
| 15 | 2 | 119717-11131 | SPRING, VALVE | 6 | | | | | | | |
| 16 | 2 | 129508-11180 | RETAINER, SPRING | 6 | | | | | | | |
| 17 | 2 | 119717-11190 | COTTER, VALVE | 12 | | | | | | | |
| 18 | 2 | 119717-11340 | SEAL, VALVE STEM | 3 | | | | | | | |
| 19 | 2 | 119717-11350 | SEAL, VALVE STEM | 3 | | | | | | | |
| 20 | 1 | 22351-060012 | PIN, SPRING 6.0X12 | 2 | | | | | | | |
| 21 | 1 | 119717-11200 | SUPPORT ASSY, ROCKER | 1 | | | | | | | |
| 22 | 2 | 119717-11240 | SHAFT ASSY, ARM | 1 | | | | | | | |
| 25 | 2 | 119717-11260 | SUPPORT, ROCKER ARM | 3 | | | | | | | |
| 26 | 2 | 119620-11280 | SPRING, SHAFT | 2 | | | | | | | |
| 27 | 2 | 119717-11650 | ARM ASSY, ROCKER INT | 6 | | | | | | | |
| 28 | 3 | 129150-11230 | SCREW, VALVE ADJUST | 6 | | | | | | | |
| 30 | 3 | 129150-11750 | NUT, M8XP1.0 | 6 | | | | | | | |
| 31 | 2 | 22242-000120 | RING, 12 | 2 | | | | | | | |
| 32 | 2 | 26979-050162 | SCREW, M5X16 | 1 | | | | | | | |
| 33 | 1 | 26106-080402 | BOLT, M8X 40 PLATED | 3 | | | | | | | |
| 34 | 1 | 124160-01751 | CAP, FILLER | 1 | | | | | | | |
| 35 | 1 | 119718-11380 | BONNET ASSY, HEAD | 1 | | | | | | | |
| 36 | 2 | 119717-03031 | PLATE, BAFFLE | 1 | | | | | | | |
| 37 | 3 | 119717-03070 | BAFFLE, BREATHER | 1 | | | | | | | |
| 38 | 2 | 119717-03070 | BAFFLE, BREATHER | 2 | | | | | | | |
| 39 | 2 | 129006-03120 | COVER, DIAPHRAGM | 1 | | | | | | | |
| 41 | 2 | 119718-11310 | GASKET, BONNET | 1 | | | | | | | |
| 42 | 2 | 119717-11320 | COVER, BONNET | 1 | | | | | | | |
| 43 | 2 | 119717-11331 | GASKET, BONNET COVER | 1 | | | | | | | |
| 44 | 2 | 22857-500100 | SCREW, 5X10 | 4 | | | | | | | |
| 45 | 2 | 22857-500100 | SCREW, 5X10 | 4 | | | | | | | |
| 46 | 2 | 22857-500160 | SCREW, 5X16 | 2 | | | | | | | |
| 47 | 2 | 24341-000400 | O-RING, 1AS40.0 | 1 | | | | | | | |
| 48 | 1 | 24311-000320 | O-RING, 1AP32.0 | 1 | | | | | | | |
| 49 | 1 | 26106-060202 | BOLT, M6X 20 PLATED | 3 | | | | | | | |
| 50 | 1 | 26106-060752 | BOLT, M6X 75 PLATED | 6 | | | | | | | |
| 51 | 1 | 119226-07900 | LIFTER, ENGINE | 1 | | | | | | | |
| 52 | 1 | 26106-080162 | BOLT, M8X 16 PLATED | 2 | | | | | | | |
| 53 | 1 | 119718-07950 | LIFTER | 1 | | | | | | | |
| 54 | 1 | 26106-080162 | BOLT, M8X 16 PLATED | 2 | | | | | | | |
| 55 | 1 | 119718-77801 | PLUG, GLOW | 3 | | | | | | | |
| 56 | 1 | 119717-77852 | CONNECTOR, GLOW PLUG | 1 | | | | | | | |
| 57 | 1 | 119717-11800 | GUIDE, VALVE | 6 | | | | | | | 1 |

Remarks
(1)Spare parts.

N:Old $\xleftarrow[\text{No}]{\text{Yes}}$ New. Q:Old $\xleftarrow[\text{Yes}]{\text{No}}$ New. R:Old $\xleftarrow[\text{Yes}]{\text{Yes}}$ New. S:Old $\xleftarrow[\text{No}]{\text{No}}$ New. W:Add. Z:Discontinued. F:Interchangeable by set. K:Q'ty Change

Copyright (C) 2019 YANMAR GLOBAL CS CO., LTD. All RightsReserved.

# Fig.5. EXHAUST MANIFOLD

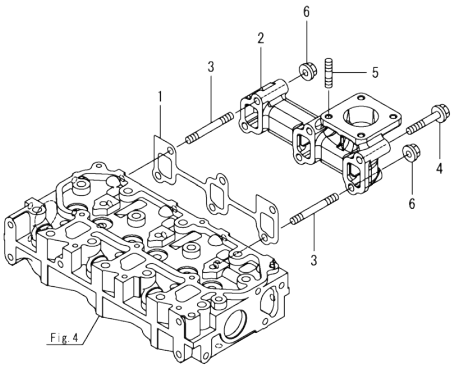




(A)=3TNV76-XPSZ (D)=
(B)= (E)=
(C)= (F)=

| No. | Lev. | Parts No. | Description | Q'ty (A) | (B) | (C) | (D) | (E) | (F) | I | R |
|---|---|---|---|---|---|---|---|---|---|---|---|
| 1 | 1 | 119717-13110 | GASKET, MANIFOLD | 1 | | | | | | | |
| 2 | 1 | 119734-13110 | MANIFOLD, EXHAUST | 1 | | | | | | | |
| 3 | 1 | 119717-13600 | STUD, M8X50 | 2 | | | | | | | |
| 4 | 1 | 129E00-13610 | BOLT, M8X50 10.9 | 4 | | | | | | | |
| 5 | 1 | 119131-18320 | STUD, M8X22 | 4 | | | | | | | |
| 6 | 1 | 26306-080002 | NUT, M8 | 2 | | | | | | | |

N:Old ←Yes/No→ New. Q:Old ←No/Yes→ New. R:Old ←Yes/Yes→ New. S:Old ←No/No→ New. W:Add. Z:Discontinued. F:Interchangeable by set. K:Q'ty Change

Copyright (C) 2019 YANMAR GLOBAL CS CO., LTD. All RightsReserved.

# Fig.6. CAMSHAFT & DRIVING GEAR



(A)=3TNV76-XPSZ
(B)=
(C)=
(D)=
(E)=
(F)=

| No. | Lev. | Parts No. | Description | Q'ty (A) | (B) | (C) | (D) | (E) | (F) | I | R |
|---|---|---|---|---|---|---|---|---|---|---|---|
| 1 | 1 | 119620-14200 | TAPPET | 6 | | | | | | | |
| 2 | 1 | 119717-14400 | ROD, PUSH | 6 | | | | | | | |
| 3 | 1 | 119717-14581 | CAMSHAFT ASSY | 1 | | | | | | | |
| 8 | 1 | 26106-060122 | BOLT, M6X 12 PLATED | 2 | | | | | | | |
| 9 | 1 | 119717-25050 | SHAFT, IDLE GEAR | 1 | | | | | | | |
| 10 | 1 | 119717-25101 | GEAR ASSY, IDLE | 1 | | | | | | | |
| 13 | 1 | 26106-060352 | BOLT, M6X 35 PLATED | 3 | | | | | | | |
| 14 | 1 | 129150-25301 | BOLT, INJECTION PUMP | 4 | | | | | | | |
| 15 | 1 | 119717-25930 | GEAR, PUMP | 1 | | | | | | | |
| 16 | 1 | 119717-25911 | BUSH, IDLE GEAR | 1 | | | | | | | 1 |
| 17 | 1 | 119717-51150 | FLANGE, CAMSHAFT | 1 | | | | | | | |

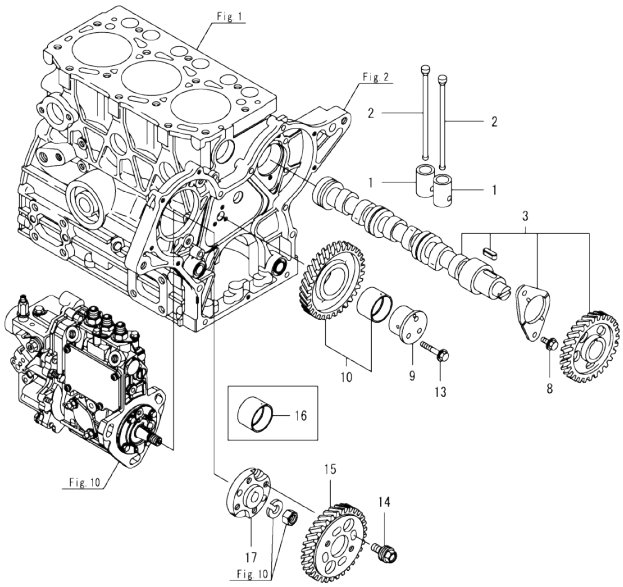


Remarks
(1)Spare parts.

N:Old ←Yes/No→ New. Q:Old ←No/Yes→ New. R:Old ←Yes/Yes→ New. S:Old ←No/No→ New. W:Add. Z:Discontinued. F:Interchangeable by set. K:Q'ty Change

Copyright (C) 2019 YANMAR GLOBAL CS CO., LTD. All RightsReserved.

# Fig.7. CRANKSHAFT & PISTON

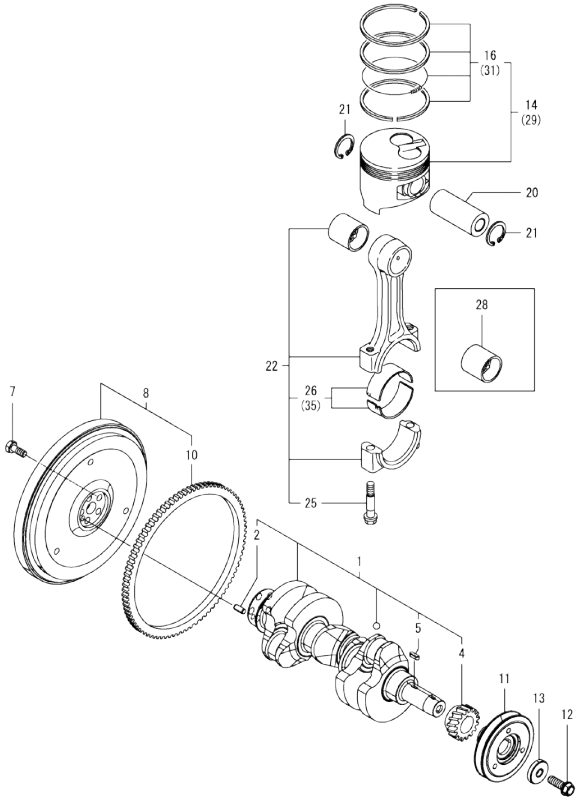


Remarks
(1)Spare parts.
(2)Under-sized(U.S.=0.25) parts.
(3)Over-sized(O.S.=0.25) parts.



(A)=3TNV76-XPSZ (D)=
(B)= (E)=
(C)= (F)=

| No. | Lev. | Parts No. | Description | Q'ty (A) | (B) | (C) | (D) | (E) | (F) | I | R |
|---|---|---|---|---|---|---|---|---|---|---|---|
| 1 | 1 | 119717-21700 | CRANKSHAFT ASSY | 1 | | | | | | | |
| 2 | 2 | 129100-01580 | PIN, PARALLEL 8X16 | 1 | | | | | | | |
| 4 | 2 | 119717-21200 | GEAR, CRANKSHAFT | 1 | | | | | | | |
| 5 | 2 | 22512-040120 | KEY, 4X 12 | 1 | | | | | | | |
| 7 | 1 | 119620-21500 | BOLT, FLYWHEEL | 5 | | | | | | | |
| 8 | 1 | 119385-21580 | FLYWHEEL ASSY | 1 | | | | | | | |
| 10 | 2 | 124060-21600 | GEAR, RING Z=105 | 1 | | | | | | | |
| 11 | 1 | 119717-21650 | V-PULLEY, CRANKSHAFT | 1 | | | | | | | |
| 12 | 1 | 119621-21681 | BOLT, FLANGE 12X1.25 | 1 | | | | | | | |
| 13 | 1 | 119620-21941 | WASHER, 12 | 1 | | | | | | | |
| 14 | 1 | 119718-22080 | PISTON ASSY | 3 | | | | | | | |
| 16 | 2 | 119717-22500 | RING SET, PISTON | 3 | | | | | | | |
| 20 | 1 | 119717-22300 | PIN, PISTON | 3 | | | | | | | |
| 21 | 1 | 22252-000220 | RING, 22 | 6 | | | | | | | |
| 22 | 1 | 119717-23001 | ROD ASSY, CONNECTING | 3 | | | | | | | |
| 25 | 2 | 119717-23200 | BOLT, CONNECTING ROD | 6 | | | | | | | |
| 26 | 2 | 119717-23601 | METAL ASSY,CRANK PIN | 3 | | | | | | | |
| 28 | 1 | 119717-23910 | METAL, PISTON PIN | 3 | | | | | | | 1 |
| 29 | 1 | 119718-22090 | PISTON ASSY, 0.25 OS | 3 | | | | | | | 3 |
| 31 | 2 | 119717-22550 | RING SET, PISTON .25 | 3 | | | | | | | 3 |
| 35 | 1 | 119717-23611 | METAL ASSY, PIN .25 | 3 | | | | | | | 2 |

N:Old ◄Yes/No► New. Q:Old ◄No/Yes► New, R:Old ◄Yes/Yes► New, S:Old ◄No/No► New, W:Add, Z:Discontinued, F:Interchangeable by set, K:Q'ty Change

Copyright (C) 2019 YANMAR GLOBAL CS CO., LTD. All RightsReserved.

# Fig.8. LUB. OIL SYSTEM



(A)=3TNV76-XPSZ
(B)=
(C)=
(D)=
(E)=
(F)=

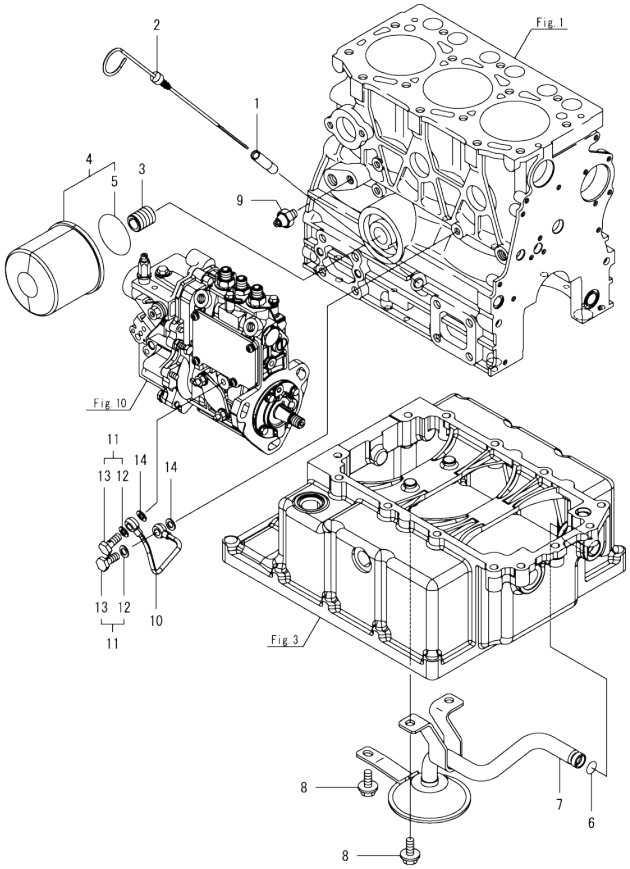


| No. | Lev. | Parts No. | Description | Q'ty (A) | (B) | (C) | (D) | (E) | (F) | I | R |
|---|---|---|---|---|---|---|---|---|---|---|---|
| 1 | 1 | 121520-34810 | GUIDE, DIPSTICK | 1 | | | | | | | |
| 2 | 1 | 119717-34870 | DIPSTICK, OIL | 1 | | | | | | | |
| 3 | 1 | 119717-35140 | STUD | 1 | | | | | | | |
| 4 | 1 | 119660-35150 | FILTER ASSY, D80XL75 | 1 | | | | | | | |
| 5 | 2 | 124450-35110 | O-RING, OIL FILTER | 1 | | | | | | | |
| 6 | 1 | 119717-32070 | O-RING, P13.0 | 1 | | | | | | | |
| 7 | 1 | 119717-35070 | PIPE ASSY, OIL INLET | 1 | | | | | | | |
| 8 | 1 | 26106-080162 | BOLT, M8X 16 PLATED | 3 | | | | | | | |
| 9 | 1 | 121252-39450 | SWITCH, HYDRAULIC | 1 | | | | | | | |
| 10 | 1 | 119717-39210 | PIPE, PUMP | 1 | | | | | | | |
| 11 | 1 | 129005-59830 | BOLT ASSY, JOINT M8 | 2 | | | | | | | |
| 12 | 2 | 22190-080002 | WASHER, SEAL 8 | 2 | | | | | | | |
| 13 | 2 | 23857-030000 | BOLT, JOINT 3 | 2 | | | | | | | |
| 14 | 1 | 22190-080002 | WASHER, SEAL 8 | 2 | | | | | | | |

N:Old ←Yes/No→ New. Q:Old ←No/Yes→ New, R:Old ←Yes/Yes→ New. S:Old ←No/No→ New. W:Add. Z:Discontinued. F:Interchangeable by set. K:Q'ty Change

Copyright (C) 2019 YANMAR GLOBAL CS CO., LTD. All RightsReserved.

# Fig.9. COOLING WATER SYSTEM



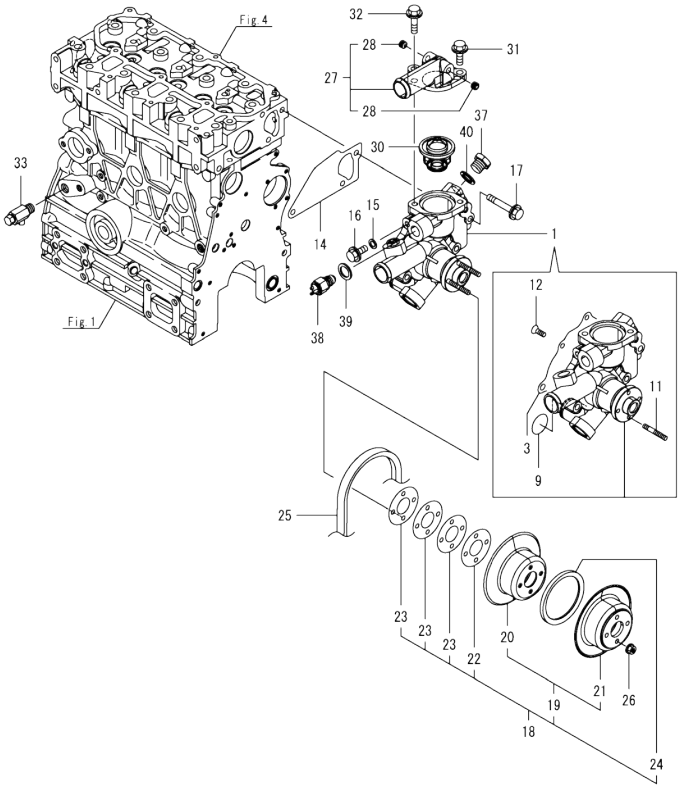


(A)=3TNV76-XPSZ (D)=
(B)= (E)=
(C)= (F)=

| No. | Lev. | Parts No. | Description | Q'ty (A) | (B) | (C) | (D) | (E) | (F) | I | R |
|---|---|---|---|---|---|---|---|---|---|---|---|
| 1 | 1 | 119715-42001 | PUMP ASSY, CW | 1 | | | | | | | |
| 3 | 2 | 119717-42031 | GASKET, WATER PUMP | 1 | | | | | | | |
| 9 | 2 | 119C10-42320 | O-RING, 2028 | 1 | | | | | | | |
| 11 | 2 | 26216-060202 | STUD, M6X 20 | 4 | | | | | | | |
| 12 | 2 | 26577-060122 | SCREW, M6X12 | 4 | | | | | | | |
| 14 | 1 | 119717-42020 | GASKET, WATER PUMP | 1 | | | | | | | |
| 15 | 1 | 23414-080000 | GASKET, 8X1.0 | 1 | | | | | | | |
| 16 | 1 | 26106-080122 | BOLT, M8X 12 PLATED | 1 | | | | | | | |
| 17 | 1 | 26106-080502 | BOLT, M8X 50 PLATED | 3 | | | | | | | |
| 18 | 1 | 119718-42400 | V-PULLEY ASSY | 1 | | | | | | | |
| 19 | 2 | 119718-42300 | V-PULLEY SET | 1 | | | | | | | |
| 20 | 3 | 119718-42350 | V-PULLEY, A | 1 | | | | | | | |
| 21 | 3 | 119718-42360 | V-PULLEY, B | 1 | | | | | | | |
| 22 | 2 | 119309-42370 | SHIM, V-PULLEY | 1 | | | | | | | |
| 23 | 2 | 124085-42370 | SHIM, V-PULLEY | 3 | | | | | | | |
| 24 | 2 | 119718-42380 | SPACER, PULLEY | 1 | | | | | | | |
| 25 | 1 | 25152-002900 | V-BELT, A29 | 1 | | | | | | | |
| 26 | 1 | 26366-060002 | NUT, M6 | 4 | | | | | | | |
| 27 | 1 | 119718-49550 | COVER ASSY | 1 | | | | | | | |
| 28 | 2 | 119285-01731 | PLUG, SCREW NPT1/8 | 2 | | | | | | | |
| 30 | 1 | 119717-49800 | THERMOSTAT, 71C | 1 | | | | | | | |
| 31 | 1 | 26106-080202 | BOLT, M8X 20 PLATED | 1 | | | | | | | |
| 32 | 1 | 26106-080302 | BOLT, M8X 30 PLATED | 1 | | | | | | | |
| 33 | 1 | 119620-49290 | COCK ASSY, 1/4 | 1 | | | | | | | |
| 37 | 1 | 121450-42450 | PLUG, M16 | 1 | | | | | | | |
| 38 | 1 | 121250-44901 | SWITCH, TEMPERATURE | 1 | | | | | | | |
| 39 | 1 | 124465-44950 | GASKET, 16 | 1 | | | | | | | |
| 40 | 1 | 124465-44950 | GASKET, 16 | 1 | | | | | | | |

N:Old ←Yes/No→ New. Q:Old ←No/Yes→ New. R:Old ←Yes/Yes→ New. S:Old ←No/No→ New. W:Add. Z:Discontinued. F:Interchangeable by set. K:Q'ty Change

Copyright (C) 2019 YANMAR GLOBAL CS CO., LTD. All RightsReserved.

# Fig.10. FUEL INJECTION PUMP

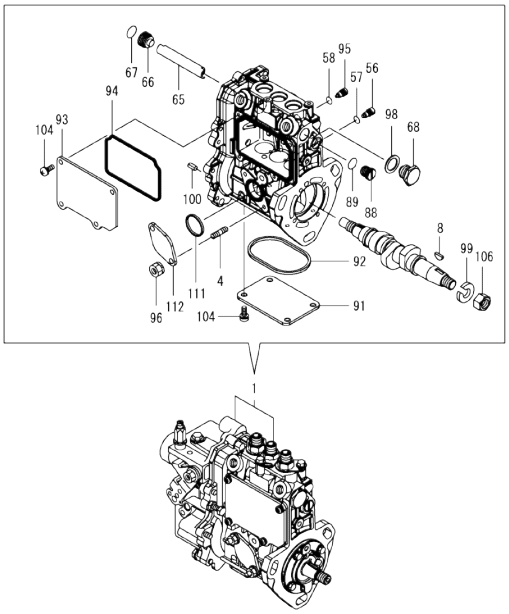




(A)=3TNV76-XPSZ
(B)=
(C)=
(D)=
(E)=
(F)=

| No. | Lev. | Parts No. | Description | Q'ty (A) | (B) | (C) | (D) | (E) | (F) | I | R |
|---|---|---|---|---|---|---|---|---|---|---|---|
| 1 | 1 | 719715-51350 | FIE ASSY | 1 | | | | | | | 1 |
| 4 | 2 | 129155-51020 | STUD | 2 | | | | | | | |
| 8 | 2 | 122710-51090 | KEY, FEATHER | 1 | | | | | | | |
| 56 | 2 | 158600-51270 | STOPPER, TAPPET | 3 | | | | | | | |
| 57 | 2 | 129155-51280 | O-RING, S6 | 3 | | | | | | | |
| 58 | 2 | 129155-51280 | O-RING, S6 | 1 | | | | | | | |
| 65 | 2 | 129155-51400 | PROTECTOR | 1 | | | | | | | |
| 66 | 2 | 158600-51410 | PLUG, DEFLIFTER M12 | 1 | | | | | | | |
| 67 | 2 | 119717-51420 | O-RING | 1 | | | | | | | |
| 68 | 2 | 158600-51420 | PLUG, DEFLIFTER M16 | 1 | | | | | | | |
| 88 | 2 | 158600-51570 | PLUG, RACK | 1 | | | | | | | |
| 89 | 2 | 129155-51580 | O-RING | 1 | | | | | | | |
| 91 | 2 | 129155-51701 | COVER, PUMP BOTTOM | 1 | | | | | | | |
| 92 | 2 | 119717-51711 | GASKET, PUMP | 1 | | | | | | | |
| 93 | 2 | 119717-51750 | COVER, BODY SIDE | 1 | | | | | | | |
| 94 | 2 | 119717-51761 | GASKET, PUMP COVER | 1 | | | | | | | |
| 95 | 2 | 158600-51790 | STOPPER, RACK | 1 | | | | | | | |
| 96 | 2 | 119717-51860 | NUT, M6 | 2 | | | | | | | |
| 98 | 2 | 22190-160002 | WASHER, SEAL 16 | 1 | | | | | | | |
| 99 | 2 | 22217-120000 | WASHER, SPRING 12 | 1 | | | | | | | |
| 100 | 2 | 22351-050010 | PIN, SPRING 5.0X10 | 2 | | | | | | | |
| 104 | 2 | 26022-050122 | SCREW, M5X12 | 8 | | | | | | | |
| 106 | 2 | 26716-120002 | NUT, M12 | 1 | | | | | | | |
| 111 | 2 | 129155-52051 | GASKET, PUMP COVER | 1 | | | | | | | |
| 112 | 2 | 129100-52200 | COVER, FEED PUMP | 1 | | | | | | | |

Remarks
(1)Governor(Fig.11) is incorporated in this Fuel Injection Pump(No.1).

N:Old ◄Yes/No► New, Q:Old ◄No/Yes► New, R:Old ◄Yes/Yes► New, S:Old ◄No/No► New, W:Add, Z:Discontinued, F:Interchangeable by set, K:Q'ty Change

Copyright (C) 2019 YANMAR GLOBAL CS CO., LTD. All RightsReserved.

# Fig.11. GOVERNOR



(A)=3TNV76-XPSZ
(B)=
(C)=
(D)=
(E)=
(F)=

| No. | Lev. | Parts No. | Description | Q'ty (A) | (B) | (C) | (D) | (E) | (F) | I | R |
|---|---|---|---|---|---|---|---|---|---|---|---|
| 2 | 2 | 119717-51930 | PLUG, M10 | 1 | | | | | | | |
| 3 | 2 | 119717-61050 | GASKET, CASE | 1 | | | | | | | |
| 4 | 2 | 119717-61060 | COVER, GOVERNOR CASE | 1 | | | | | | | |
| 5 | 2 | 119717-61070 | GASKET, COVER | 1 | | | | | | | |
| 11 | 2 | 129155-51280 | O-RING, S6 | 1 | | | | | | | |
| 26 | 2 | 119515-61440 | LEVER, CONTROL | 1 | | | | | | | |
| 64 | 2 | 158552-61700 | SHIM SET | 1 | | | | | | | |
| 69 | 2 | 119660-61901 | STOPPER, SHAFT | 1 | | | | | | | |
| 73 | 2 | 26106-060102 | BOLT, M6X 10 PLATED | 1 | | | | | | | |
| 74 | 2 | 26366-080002 | NUT, M8 | 1 | | | | | | | |
| 77 | 2 | 171353-61461 | BOLT, IDLE | 1 | | | | | | | |
| 78 | 2 | 158552-61900 | O-RING | 1 | | | | | | | |
| 80 | 2 | 22190-100002 | WASHER, SEAL 10 | 1 | | | | | | | |
| 82 | 2 | 22372-040000 | PIN, SNAP 4 | 1 | | | | | | | |
| 83 | 2 | 26106-060102 | BOLT, M6X 10 PLATED | 4 | | | | | | | |
| 84 | 2 | 26106-060142 | BOLT, M6X 14 PLATED | 2 | | | | | | | |
| 85 | 2 | 26106-060202 | BOLT, M6X 20 PLATED | 4 | | | | | | | |
| 86 | 2 | 26106-060452 | BOLT, M6X 45 PLATED | 3 | | | | | | | |
| 87 | 2 | 119740-61470 | NUT | 1 | | | | | | | |
| 121 | 2 | 129630-77900 | SOLENOID, STOP | 1 | | | | | | | |

Remarks
* This figure(Governor) is incorporated in the Fuel Injection Pump(Fig.10).

N:Old ◄Yes/No► New. Q:Old ◄No/Yes► New. R:Old ◄Yes/Yes► New. S:Old ◄No/No► New. W:Add. Z:Discontinued. F:Interchangeable by set. K:Q'ty Change

Copyright (C) 2019 YANMAR GLOBAL CS CO., LTD. All RightsReserved.

# Fig.12. FUEL INJECTION VALVE

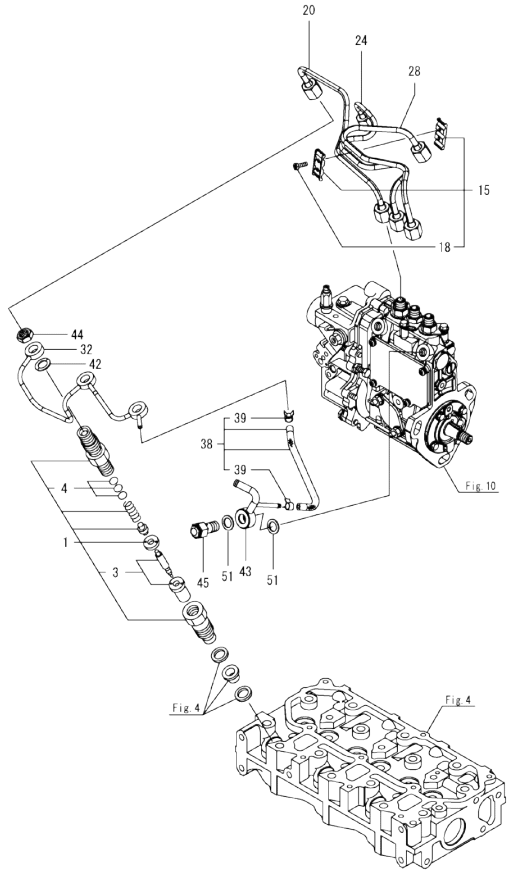


Remarks
(1)Spare parts.



(A)=3TNV76-XPSZ (D)=
(B)= (E)=
(C)= (F)=

| No. | Lev. | Parts No. | Description | Q'ty (A) | (B) | (C) | (D) | (E) | (F) | I | R |
|---|---|---|---|---|---|---|---|---|---|---|---|
| 1 | 1 | 119717-53001 | VALVE ASSY,INJECTION | 3 | | | | | | | |
| 3 | 2 | 119717-53010 | VALVE ASSY,INJECTION | 3 | | | | | | | |
| 4 | 2 | 129901-53800 | SHIM SET, ADJUSTING | 3 | | | | | | | 1 |
| 15 | 1 | 129150-59120 | RETAINER, PIPE | 1 | | | | | | | |
| 18 | 2 | 129150-59131 | BOLT, M4X14 | 2 | | | | | | | |
| 20 | 1 | 119717-59810 | PIPE, INJECTION NO.1 | 1 | | | | | | | |
| 24 | 1 | 119717-59820 | PIPE, INJECTION NO.2 | 1 | | | | | | | |
| 28 | 1 | 119717-59830 | PIPE, INJECTION NO.3 | 1 | | | | | | | |
| 32 | 1 | 119717-59510 | PIPE ASSY, RETURN | 1 | | | | | | | |
| 38 | 1 | 119744-59560 | HOSE ASSY, RETURN | 1 | | | | | | | |
| 39 | 2 | 124066-59100 | CLAMP, HOSE 8 | 2 | | | | | | | |
| 42 | 1 | 129901-59560 | GASKET, FUEL RETURN | 3 | | | | | | | |
| 43 | 1 | 119515-59581 | JOINT, OVERFLOW | 1 | | | | | | | |
| 44 | 1 | 119620-59700 | NUT, NOZZLE RETURN | 3 | | | | | | | |
| 45 | 1 | 119813-59950 | VALVE ASSY, CHECK | 1 | | | | | | | |
| 51 | 1 | 22190-120002 | WASHER, SEAL 12 | 2 | | | | | | | |

N:Old $\frac{\text{Yes}}{\text{No}}$ New. Q:Old $\frac{\text{No}}{\text{Yes}}$ New. R:Old $\frac{\text{Yes}}{\text{Yes}}$ New. S:Old $\frac{\text{No}}{\text{No}}$ New. W:Add. Z:Discontinued. F:Interchangeable by set. K:Q'ty Change

Copyright (C) 2019 YANMAR GLOBAL CS CO., LTD. All RightsReserved.

# Fig.13. FUEL PIPE

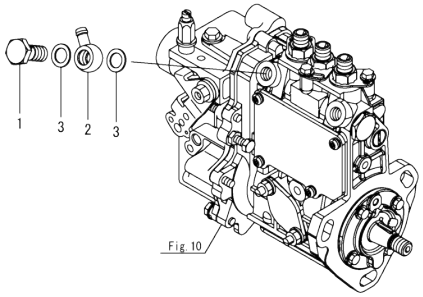




(A)=3TNV76-XPSZ (D)=
(B)= (E)=
(C)= (F)=

| No. | Lev. | Parts No. | Description | Q'ty (A) | (B) | (C) | (D) | (E) | (F) | I | R |
|---|---|---|---|---|---|---|---|---|---|---|---|
| 1 | 1 | 103854-39140 | BOLT, PIPE JOINT | 1 | | | | | | | |
| 2 | 1 | 101304-59020 | JOINT, PIPE 12 | 1 | | | | | | | |
| 3 | 1 | 22190-120002 | WASHER, SEAL 12 | 2 | | | | | | | |

N:Old ◄Yes/No► New. Q:Old ◄No/Yes► New, R:Old ◄Yes/Yes► New. S:Old ◄No/No► New. W:Add. Z:Discontinued. F:Interchangeable by set. K:Q'ty Change

Copyright (C) 2019 YANMAR GLOBAL CS CO., LTD. All RightsReserved.

# Fig.14. STARTER MOTOR



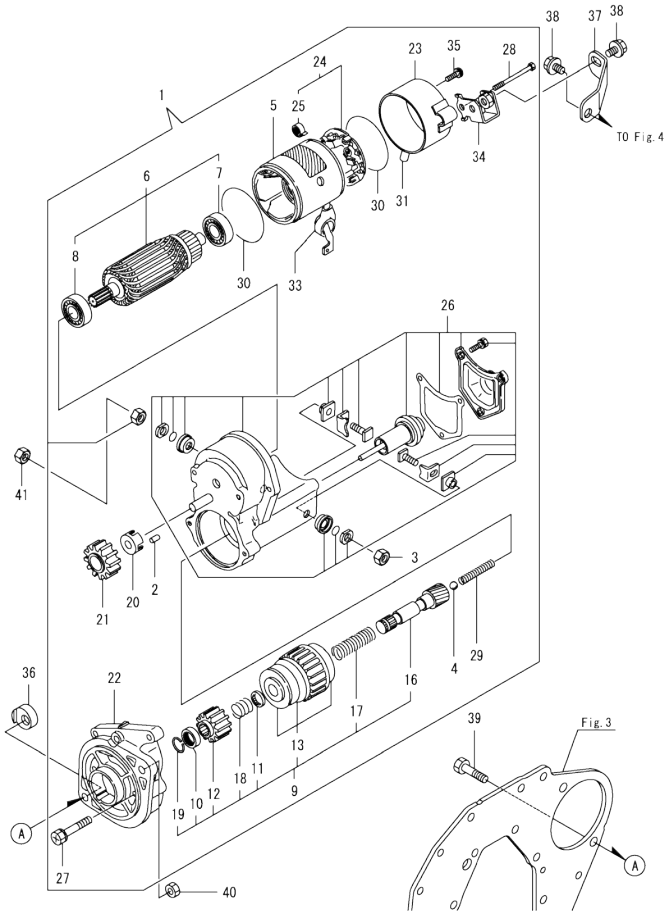


(A)=3TNV76-XPSZ
(B)=
(C)=
(D)=
(E)=
(F)=

| No. | Lev. | Parts No. | Description | Q'ty (A) | (B) | (C) | (D) | (E) | (F) | I | R |
|---|---|---|---|---|---|---|---|---|---|---|---|
| 1 | 1 | 119209-77010 | STARTER, 1.4 R | 1 | | | | | | | |
| 2 | 2 | X0283060061 | ROLLER | 5 | | | | | | | |
| 3 | 2 | X9490561370 | NUT | 1 | | | | | | | |
| 4 | 2 | X9491200240 | BALL, STEEL | 1 | | | | | | | |
| 5 | 2 | 129407-77210 | YOKE ASSY | 1 | | | | | | | |
| 6 | 2 | 129407-77220 | ARMATURE ASSY | 1 | | | | | | | |
| 7 | 3 | 129129-77230 | BEARING, BALL | 1 | | | | | | | |
| 8 | 3 | 129129-77240 | BEARING, BALL | 1 | | | | | | | |
| 9 | 2 | 121120-77250 | STARTER | 1 | | | | | | | |
| 10 | 3 | X0280210230 | NUT, PINION STOP | 1 | | | | | | | |
| 11 | 3 | X0283270140 | RETAINER, SNAP | 1 | | | | | | | |
| 12 | 3 | X0283711770 | PINION, STARTER | 1 | | | | | | | |
| 13 | 3 | 129129-77390 | CLUTCH ASSY, STARTER | 1 | | | | | | | |
| 16 | 3 | 129129-77400 | SHAFT, STARTER | 1 | | | | | | | |
| 17 | 3 | 129129-77410 | SPRING, COIL | 1 | | | | | | | |
| 18 | 3 | 129407-77410 | SPRING, COIL | 1 | | | | | | | |
| 19 | 3 | 129129-77430 | RING, SNAP | 1 | | | | | | | |
| 20 | 2 | 129129-77260 | RETAINER | 1 | | | | | | | |
| 21 | 2 | 129129-77270 | PINION | 1 | | | | | | | |
| 22 | 2 | 119209-77280 | HOUSING | 1 | | | | | | | |
| 23 | 2 | 129407-77290 | FRAME | 1 | | | | | | | |
| 24 | 2 | 129407-77300 | HOLDER ASSY | 1 | | | | | | | |
| 25 | 3 | X9491730461 | SPRING, BRUSH | 4 | | | | | | | |
| 26 | 2 | 119209-77310 | SWITCH ASSY, MAGNET | 1 | | | | | | | |
| 27 | 2 | 129129-77320 | BOLT, W/WASHER | 2 | | | | | | | |
| 28 | 2 | 129407-77330 | BOLT | 2 | | | | | | | |
| 29 | 2 | 129129-77340 | SPRING | 1 | | | | | | | |
| 30 | 2 | 129129-77350 | O-RING | 2 | | | | | | | |
| 31 | 2 | 129129-77362 | COVER | 1 | | | | | | | |
| 33 | 2 | 129129-77380 | CAP | 1 | | | | | | | |
| 34 | 2 | 119209-77460 | STAY | 1 | | | | | | | |
| 35 | 2 | 129129-77460 | SCREW | 2 | | | | | | | |
| 36 | 1 | 119285-77050 | NUT, STARTER | 1 | | | | | | | |
| 37 | 1 | 119718-77900 | SUPPORT, STARTER | 1 | | | | | | | |
| 38 | 1 | 26106-080142 | BOLT, M8X 14 PLATED | 2 | | | | | | | |
| 39 | 1 | 26156-120402 | BOLT, M12X 40 PLATED | 2 | | | | | | | |
| 40 | 1 | 26736-120002 | NUT, M12 | 1 | | | | | | | |
| 41 | 1 | 26756-080002 | NUT, LOCK M8 | 1 | | | | | | | |

N:Old ←Yes/No→ New. Q:Old ←No/Yes→ New. R:Old ←Yes/Yes→ New. S:Old ←No/No→ New. W:Add. Z:Discontinued. F:Interchangeable by set. K:Q'ty Change

Copyright (C) 2019 YANMAR GLOBAL CS CO., LTD. All RightsReserved.

# Fig.15. ACCESSORY

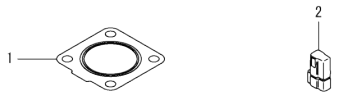




(A)=3TNV76-XPSZ (D)=
(B)= (E)=
(C)= (F)=

| No. | Lev. | Parts No. | Description | Q'ty (A) | (B) | (C) | (D) | (E) | (F) | I | R |
|---|---|---|---|---|---|---|---|---|---|---|---|
| 1 | 1 | 119515-13200 | GASKET, SILENCER | 1 | | | | | | | |
| 2 | 1 | 119643-66900 | DIODE | 1 | | | | | | | |

N:Old ◄Yes/No► New. Q:Old ◄No/Yes► New, R:Old ◄Yes/Yes► New. S:Old ◄No/No► New. W:Add. Z:Discontinued. F:Interchangeable by set. K:Q`ty Change

Copyright (C) 2019 YANMAR GLOBAL CS CO., LTD. All RightsReserved.

# Parts No. Index

| Parts No. | Fig. No. | Ref. No. |
|---|---|---|
| 101304-59020 | 13 | 2 |
| 103854-39140 | 13 | 1 |
| 105010-11490 | 4 | 3 |
| 105311-01090 | 1 | 5 |
| 105425-01690 | 3 | 19 |
| 106760-01770 | 3 | 12 |
| 119131-18320 | 5 | 5 |
| 119209-77010 | 14 | 1 |
| 119209-77280 | 14 | 22 |
| 119209-77310 | 14 | 26 |
| 119209-77460 | 14 | 34 |
| 119226-07900 | 4 | 51 |
| 119285-01580 | 3 | 5 |
| 119285-01731 | 9 | 28 |
| 119285-01990 | 1 | 8 |
| 119285-11990 | 4 | 11 |
| 119285-77050 | 14 | 36 |
| 119309-42370 | 9 | 22 |
| 119385-21580 | 7 | 8 |
| 119515-13200 | 15 | 1 |
| 119515-59581 | 12 | 43 |
| 119515-61440 | 11 | 26 |
| 119600-11460 | 4 | 2 |
| 119620-01620 | 3 | 6 |
| 119620-02020 | 1 | 9 |
| 119620-11280 | 4 | 26 |
| 119620-14200 | 6 | 1 |
| 119620-21500 | 7 | 7 |
| 119620-21941 | 7 | 13 |
| 119620-49290 | 9 | 33 |
| 119620-59700 | 12 | 44 |
| 119621-21681 | 7 | 12 |
| 119623-01250 | 1 | 6 |
| 119624-32040 | 2 | 18 |
| 119643-66900 | 15 | 2 |
| 119660-01911 | 2 | 17 |
| 119660-35150 | 8 | 4 |
| 119660-61901 | 11 | 69 |
| 119715-01840 | 3 | 13 |
| 119715-42001 | 9 | 1 |
| 119717-01331 | 1 | 27 |
| 119717-01501 | 2 | 1 |
| 119717-01521 | 2 | 5 |
| 119717-01570 | 2 | 2 |
| 119717-01750 | 2 | 16 |
| 119717-01800 | 2 | 7 |
| 119717-01880 | 3 | 18 |
| 119717-02411 | 1 | 12 |
| 119717-02930 | 1 | 23 |
| 119717-03031 | 4 | 36 |

| Parts No. | Fig. No. | Ref. No. |
|---|---|---|
| 119717-03070 | 4 | 37 |
| | | 38 |
| 119717-11101 | 4 | 13 |
| 119717-11110 | 4 | 14 |
| 119717-11131 | 4 | 15 |
| 119717-11190 | 4 | 17 |
| 119717-11200 | 4 | 21 |
| 119717-11240 | 4 | 22 |
| 119717-11260 | 4 | 25 |
| 119717-11320 | 4 | 42 |
| 119717-11331 | 4 | 43 |
| 119717-11340 | 4 | 18 |
| 119717-11350 | 4 | 19 |
| 119717-11650 | 4 | 27 |
| 119717-11740 | 4 | 4 |
| 119717-11800 | 4 | 57 |
| 119717-13110 | 5 | 1 |
| 119717-13600 | 5 | 3 |
| 119717-14400 | 6 | 2 |
| 119717-14581 | 6 | 3 |
| 119717-21200 | 7 | 4 |
| 119717-21650 | 7 | 11 |
| 119717-21700 | 7 | 1 |
| 119717-22300 | 7 | 20 |
| 119717-22500 | 7 | 16 |
| 119717-22550 | 7 | 31 |
| 119717-23001 | 7 | 22 |
| 119717-23200 | 7 | 25 |
| 119717-23601 | 7 | 26 |
| 119717-23611 | 7 | 35 |
| 119717-23910 | 7 | 28 |
| 119717-25050 | 6 | 9 |
| 119717-25101 | 6 | 10 |
| 119717-25911 | 6 | 16 |
| 119717-25930 | 6 | 15 |
| 119717-32050 | 2 | 19 |
| 119717-32070 | 8 | 6 |
| 119717-32080 | 2 | 9 |
| 119717-32100 | 2 | 8 |
| 119717-32110 | 2 | 13 |
| 119717-32120 | 2 | 14 |
| 119717-34870 | 8 | 2 |
| 119717-35070 | 8 | 7 |
| 119717-35140 | 8 | 3 |
| 119717-39210 | 8 | 10 |
| 119717-42020 | 9 | 14 |
| 119717-42031 | 9 | 3 |
| 119717-49800 | 9 | 30 |
| 119717-51150 | 6 | 17 |
| 119717-51420 | 10 | 67 |

| Parts No. | Fig. No. | Ref. No. |
|---|---|---|
| 119717-51711 | 10 | 92 |
| 119717-51750 | 10 | 93 |
| 119717-51761 | 10 | 94 |
| 119717-51860 | 10 | 96 |
| 119717-51930 | 11 | 2 |
| 119717-53001 | 12 | 1 |
| 119717-53010 | 12 | 3 |
| 119717-59510 | 12 | 32 |
| 119717-59810 | 12 | 20 |
| 119717-59820 | 12 | 24 |
| 119717-59830 | 12 | 28 |
| 119717-61050 | 11 | 3 |
| 119717-61060 | 11 | 4 |
| 119717-61070 | 11 | 5 |
| 119717-77852 | 4 | 56 |
| 119718-01600 | 3 | 2 |
| 119718-01640 | 3 | 7 |
| 119718-01740 | 3 | 11 |
| 119718-07950 | 4 | 53 |
| 119718-11310 | 4 | 41 |
| 119718-11380 | 4 | 35 |
| 119718-22080 | 7 | 14 |
| 119718-22090 | 7 | 29 |
| 119718-42300 | 9 | 19 |
| 119718-42350 | 9 | 20 |
| 119718-42360 | 9 | 21 |
| 119718-42380 | 9 | 24 |
| 119718-42400 | 9 | 18 |
| 119718-49550 | 9 | 27 |
| 119718-77801 | 4 | 55 |
| 119718-77900 | 14 | 37 |
| 119734-01590 | 2 | 3 |
| 119734-02220 | 3 | 9 |
| 119734-13110 | 5 | 2 |
| 119740-61470 | 11 | 87 |
| 119744-59560 | 12 | 38 |
| 119802-32130 | 2 | 15 |
| 119810-01200 | 1 | 26 |
| 119810-02941 | 1 | 34 |
| 119813-59950 | 12 | 45 |
| 119C10-42320 | 9 | 9 |
| 121120-77250 | 14 | 9 |
| 121250-44901 | 9 | 38 |
| 121252-39450 | 8 | 9 |
| 121450-42450 | 9 | 37 |
| 121520-34810 | 8 | 1 |
| 121850-51960 | 2 | 20 |
| 122710-51090 | 10 | 8 |
| 124060-01050 | 1 | 4 |
| 124060-21600 | 7 | 10 |

| Parts No. | Fig. No. | Ref. No. |
|---|---|---|
| 124066-59100 | 12 | 39 |
| 124085-01771 | 3 | 15 |
| 124085-42370 | 9 | 23 |
| 124160-01751 | 2 | 28 |
| | 4 | 34 |
| 124160-01910 | 1 | 7 |
| 124450-35110 | 8 | 5 |
| 124465-44950 | 9 | 39 |
| | | 40 |
| 129001-32320 | 2 | 11 |
| 129001-32330 | 2 | 12 |
| 129005-59830 | 8 | 11 |
| 129006-03120 | 4 | 39 |
| 129100-01580 | 3 | 1 |
| | 7 | 2 |
| 129100-52200 | 10 | 112 |
| 129129-77230 | 14 | 7 |
| 129129-77240 | 14 | 8 |
| 129129-77260 | 14 | 20 |
| 129129-77270 | 14 | 21 |
| 129129-77320 | 14 | 27 |
| 129129-77340 | 14 | 29 |
| 129129-77350 | 14 | 30 |
| 129129-77362 | 14 | 31 |
| 129129-77380 | 14 | 33 |
| 129129-77390 | 14 | 13 |
| 129129-77400 | 14 | 16 |
| 129129-77410 | 14 | 17 |
| 129129-77430 | 14 | 19 |
| 129129-77460 | 14 | 35 |
| 129150-11230 | 4 | 28 |
| 129150-11750 | 4 | 30 |
| 129150-25301 | 6 | 14 |
| 129150-59120 | 12 | 15 |
| 129150-59131 | 12 | 18 |
| 129155-51020 | 10 | 4 |
| 129155-51280 | 10 | 57 |
| | | 58 |
| | 11 | 11 |
| 129155-51400 | 10 | 65 |
| 129155-51580 | 10 | 89 |
| 129155-51701 | 10 | 91 |
| 129155-52051 | 10 | 111 |
| 129407-77210 | 14 | 5 |
| 129407-77220 | 14 | 6 |
| 129407-77290 | 14 | 23 |
| 129407-77300 | 14 | 24 |
| 129407-77330 | 14 | 28 |
| 129407-77410 | 14 | 18 |
| 129508-11180 | 4 | 16 |

# Parts No. Index

| Parts No. | Fig. No. | Ref. No. |
|---|---|---|
| 129630-77900 | 11 | 121 |
| 129900-32130 | 2 | 10 |
| 129901-11450 | 4 | 1 |
| 129901-53800 | 12 | 4 |
| 129901-59560 | 12 | 42 |
| 129E00-13610 | 5 | 4 |
| 158552-61700 | 11 | 64 |
| 158552-61900 | 11 | 78 |
| 158600-51270 | 10 | 56 |
| 158600-51410 | 10 | 66 |
| 158600-51420 | 10 | 68 |
| 158600-51570 | 10 | 88 |
| 158600-51790 | 10 | 95 |
| 171353-61461 | 11 | 77 |
| 22190-080002 | 8 | 12 |
| | | 14 |
| 22190-100002 | 11 | 80 |
| 22190-120002 | 12 | 51 |
| | 13 | 3 |
| 22190-160002 | 3 | 21 |
| | 10 | 98 |
| 22217-120000 | 10 | 99 |
| 22242-000120 | 4 | 31 |
| 22252-000220 | 7 | 21 |
| 22351-050010 | 10 | 100 |
| 22351-060012 | 4 | 20 |
| 22372-040000 | 11 | 82 |
| 22512-040120 | 7 | 5 |
| 22857-500100 | 4 | 44 |
| | | 45 |
| 22857-500160 | 4 | 46 |
| 23414-080000 | 9 | 15 |
| 23857-030000 | 8 | 13 |
| 23876-005000 | 4 | 12 |
| 23876-030000 | 2 | 6 |
| 24311-000180 | 3 | 22 |
| 24311-000320 | 2 | 29 |
| | 4 | 48 |
| 24341-000400 | 4 | 47 |
| 25152-002900 | 9 | 25 |
| 26022-050122 | 10 | 104 |
| 26106-060102 | 11 | 73 |
| | | 83 |
| 26106-060122 | 2 | 21 |
| | 6 | 8 |
| 26106-060142 | 11 | 84 |
| 26106-060162 | 2 | 22 |
| 26106-060202 | 4 | 49 |
| | 11 | 85 |
| 26106-060222 | 3 | 10 |

| Parts No. | Fig. No. | Ref. No. |
|---|---|---|
| 26106-060352 | 6 | 13 |
| 26106-060402 | 2 | 23 |
| | | 24 |
| 26106-060452 | 11 | 86 |
| 26106-060602 | 2 | 25 |
| 26106-060652 | 2 | 26 |
| 26106-060752 | 4 | 50 |
| 26106-080122 | 9 | 16 |
| 26106-080142 | 14 | 38 |
| 26106-080162 | 4 | 52 |
| | | 54 |
| | 8 | 8 |
| 26106-080202 | 9 | 31 |
| 26106-080252 | 3 | 23 |
| 26106-080302 | 9 | 32 |
| 26106-080352 | 3 | 24 |
| 26106-080402 | 4 | 33 |
| 26106-080502 | 9 | 17 |
| 26106-080702 | 3 | 25 |
| 26106-081202 | 3 | 26 |
| 26156-120402 | 14 | 39 |
| 26206-100202 | 3 | 3 |
| 26206-100252 | 3 | 4 |
| 26216-060202 | 9 | 11 |
| 26306-080002 | 2 | 27 |
| | 5 | 6 |
| 26366-060002 | 9 | 26 |
| 26366-080002 | 11 | 74 |
| 26577-060122 | 9 | 12 |
| 26716-120002 | 10 | 106 |
| 26736-120002 | 14 | 40 |
| 26756-080002 | 14 | 41 |
| 26979-050162 | 4 | 32 |
| 27241-120000 | 1 | 13 |
| 719715-51350 | 10 | 1 |
| 719717-01561 | 1 | 1 |
| 719717-02901 | 1 | 28 |
| 719717-02911 | 1 | 31 |
| 719734-01500 | 2 | 4 |
| X0280210230 | 14 | 10 |
| X0283060061 | 14 | 2 |
| X0283270140 | 14 | 11 |
| X0283711770 | 14 | 12 |
| X9490561370 | 14 | 3 |
| X9491200240 | 14 | 4 |
| X9491730461 | 14 | 25 |

| Parts No. | Fig. No. | Ref. No. |
|---|---|---|

| Parts No. | Fig. No. | Ref. No. |
|---|---|---|