YANMAR

PARTS CATALOG

0CD50-M06340EN

Last update Sep., 2020

PREFACE

This parts catalog is the 1st edition of 3TNV76-XSTY for Zhengzhou Kaixue.

Published : September, 2020

Contents

0CD50-M06340

Fig. No.	Fig. Name
ENGINE	
1.	CYLINDER BLOCK
2.	GEAR HOUSING
3.	MOUNTING FLANGE & OIL SUMP
4.	CYLINDER HEAD & BONNET
5.	EXHAUST MANIFOLD
6.	CAMSHAFT & DRIVING GEAR
7.	CRANKSHAFT & PISTON
8.	LUB. OIL SYSTEM
9.	COOLING WATER SYSTEM
10.	FUEL INJECTION PUMP
11.	GOVERNOR
12.	FUEL INJECTION VALVE
13.	FUEL PIPE
14.	STARTER MOTOR
15.	TENSION PULLEY
16.	ACCESSORY

Fig.1. CYLINDER BLOCK

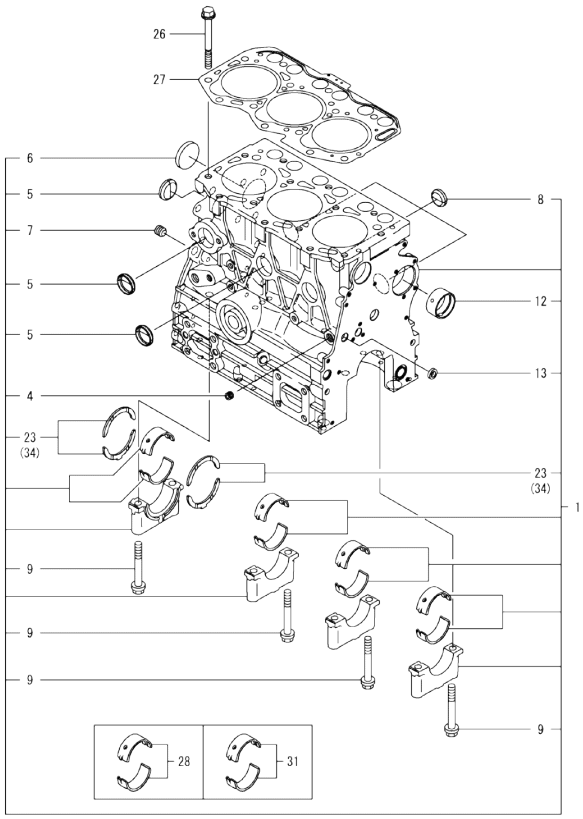

Remarks
(1)Spare parts.
(2)Under-sized(U.S.=0.25) parts.
(3)Over-sized(O.S.=0.25) parts.

(A)=3TNV76-XSTY
(B)=
(C)=
(D)=
(E)=
(F)=

No.	Lev.	Parts No.	Description	Q'ty (A)	(B)	(C)	(D)	(E)	(F)	I	R
1	1	719717-01561	BLOCK ASSY, CYLINDER	1							
4	2	124060-01050	PLUG, PT1/8	1							
5	2	105311-01090	PLUG, 30	4							
6	2	119623-01250	PLUG, 45	1							
7	2	124160-01910	PLUG, PT1/4	1							
8	2	119285-01990	PLUG, 25	3							
9	2	119620-02020	BOLT, METAL CAP	8							
12	2	119717-02411	BUSH, CAMSHAFT	1							
13	2	27241-120000	PLUG, 12	1							
23	2	119717-02930	METAL ASSY, THRUST	2							
26	1	119810-01200	BOLT, CYLINDER HEAD	14							
27	1	119717-01331	GASKET, HEAD	1							
28	1	719717-02901	METAL ASSY, MAIN	4							1
31	1	719717-02911	METAL ASSY, MAIN .25	4							2
34	1	119810-02941	METAL ASSY, 0.25 OS	2							3

N:Old ◄Yes/No► New. Q:Old ◄No/Yes► New. R:Old ◄Yes/Yes► New. S:Old ◄No/No► New. W:Add. Z:Discontinued. F:Interchangeable by set. K:Q'ty Change

Copyright (C) 2020 YANMAR GLOBAL CS CO., LTD. All RightsReserved.

Fig.2. GEAR HOUSING

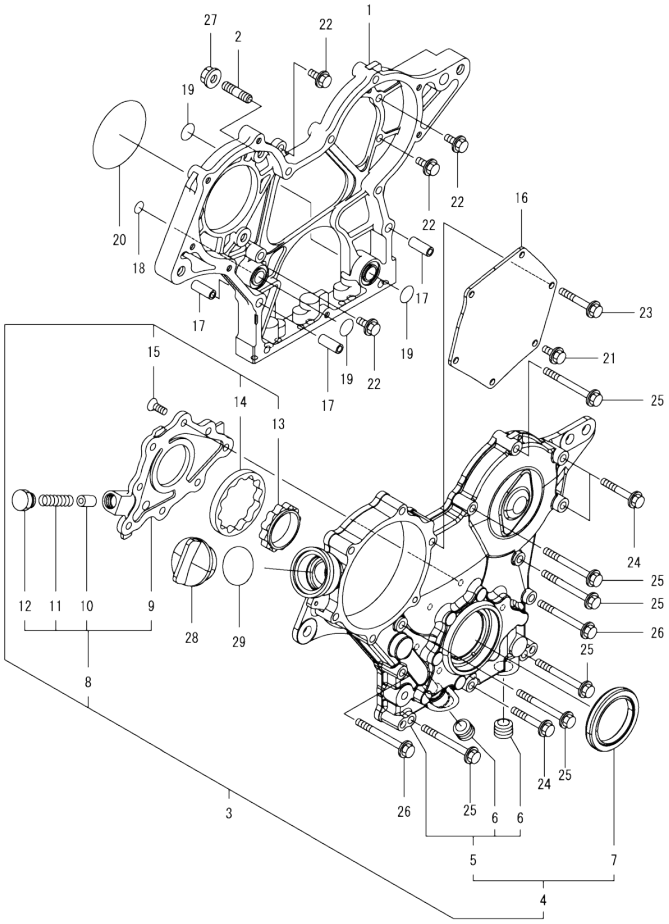

(A)=3TNV76-XSTY (D)=
(B)= (E)=
(C)= (F)=

No.	Lev.	Parts No.	Description	Q'ty (A)	(B)	(C)	(D)	(E)	(F)	I	R
1	1	119717-01501	CASE, GEAR	1							
2	1	119717-01570	STUD	3							
3	1	119734-01590	COVER ASSY, CASE	1							
4	2	719734-01500	COVER ASSY, CASE	1							
5	3	119717-01521	COVER, GEAR CASE	1							
6	4	23876-030000	PLUG, R03	2							
7	3	119717-01800	SEAL, OIL	1							
8	2	119717-32100	COVER ASSY, PUMP	1							
9	3	119717-32080	COVER, OIL PUMP	1							
10	3	129900-32130	VALVE, RELIEF	1							
11	3	129001-32320	SPRING	1							
12	3	129001-32330	PLUG	1							
13	2	119717-32110	ROTOR, INNER	1							
14	2	119717-32120	ROTOR, OUTER	1							
15	2	119802-32130	SCREW, M6X16	8							
16	1	119717-01750	COVER, PUMP	1							
17	1	119660-01911	PIPE, KNOCK 6X17	4							
18	1	119624-32040	O-RING, P12.0	1							
19	1	119717-32050	O-RING, P17.0	3							
20	1	121850-51960	O-RING, FUEL PUMP	1							
21	1	26106-060122	BOLT, M6X 12 PLATED	1							
22	1	26106-060162	BOLT, M6X 16 PLATED	4							
23	1	26106-060402	BOLT, M6X 40 PLATED	4							
24	1	26106-060402	BOLT, M6X 40 PLATED	3							
25	1	26106-060602	BOLT, M6X 60 PLATED	7							
26	1	26106-060652	BOLT, M6X 65 PLATED	2							
27	1	26306-080002	NUT, M8	3							
28	1	124160-01751	CAP, FILLER	1							
29	1	24311-000320	O-RING, 1AP32.0	1							

N:Old ←Yes/No→ New. Q:Old ←No/Yes→ New. R:Old ←Yes/Yes→ New. S:Old ←No/No→ New. W:Add. Z:Discontinued. F:Interchangeable by set. K:Q'ty Change

Copyright (C) 2020 YANMAR GLOBAL CS CO., LTD. All RightsReserved.

Fig.3. MOUNTING FLANGE & OIL SUMP

(A)=3TNV76-XSTY
(B)=
(C)=
(D)=
(E)=
(F)=

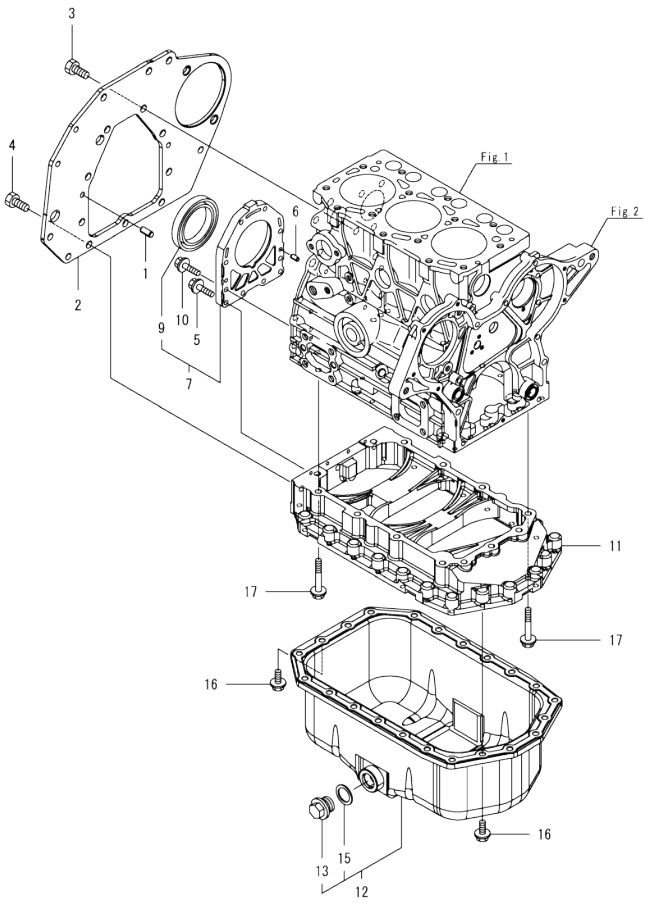

No.	Lev.	Parts No.	Description	Q'ty (A)	(B)	(C)	(D)	(E)	(F)	I	R
1	1	129100-01580	PIN, PARALLEL 8X16	2							
2	1	119718-01600	FLANGE, MOUNTING	1							
3	1	26206-100202	BOLT, M10X 20 PLATED	7							
4	1	26206-100252	BOLT, M10X 25 PLATED	3							
5	1	119285-01580	BOLT, M46X22	4							
6	1	119620-01620	PIN, PARALLEL M6X10	2							
7	1	119718-01640	CASE ASSY, OIL SEAL	1							
9	2	119734-02220	SEAL, OIL WHEEL SIDE	1							
10	1	26106-060222	BOLT, M6X 22 PLATED	6							
11	1	119717-01740	SPACER, OIL PAN	1							
12	1	129100-01760	OIL PAN ASSY	1							
13	2	119640-01640	PLUG, DRAIN M22	1							
15	2	22190-220002	WASHER, SEAL 22	1							
16	1	26106-080122	BOLT, M8X 12 PLATED	22							
17	1	26106-080452	BOLT, M8X 45 PLATED	13							

N:Old ◄Yes/No► New. Q:Old ◄No/Yes► New. R:Old ◄Yes/Yes► New. S:Old ◄No/No► New. W:Add. Z:Discontinued. F:Interchangeable by set. K:Q'ty Change

Copyright (C) 2020 YANMAR GLOBAL CS CO., LTD. All RightsReserved.

Fig.4. CYLINDER HEAD & BONNET

(A)=3TNV76-XSTY
(B)=
(C)=
(D)=
(E)=
(F)=

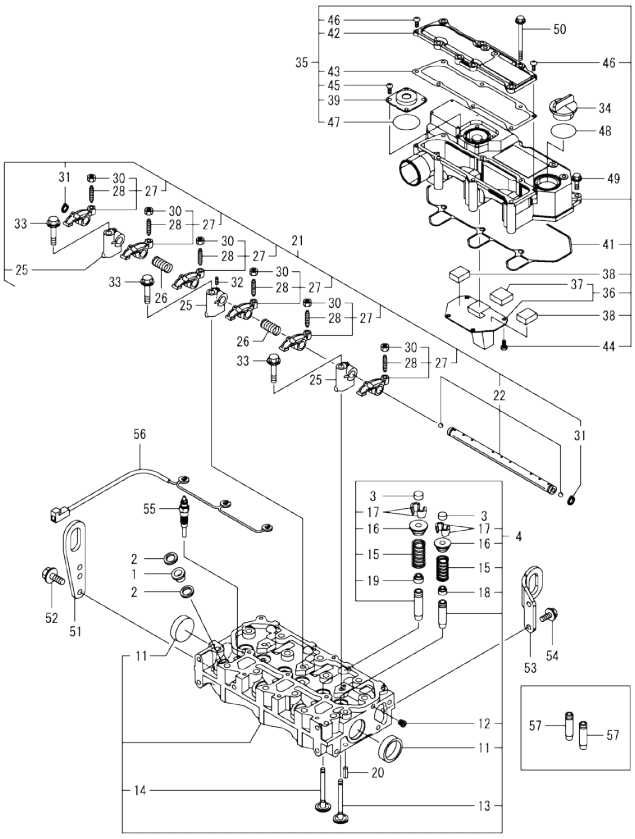

No.	Lev.	Parts No.	Description	Q'ty (A)	(B)	(C)	(D)	(E)	(F)	I	R
1	1	129901-11450	PROTECTOR, NOZZLE	3							
2	1	119600-11460	GASKET, NOZZLE	6							
3	1	105010-11490	CAP, VALVE	6							
4	1	119717-11740	HEAD ASSY, CYLINDER	1							
11	2	119285-11990	PLUG, 35	2							
12	2	23876-005000	PLUG, R005	1							
13	2	119717-11101	VALVE, INTAKE	3							
14	2	119717-11110	VALVE, EXHAUST	3							
15	2	119717-11131	SPRING, VALVE	6							
16	2	129508-11180	RETAINER, SPRING	6							
17	2	119717-11190	COTTER, VALVE	12							
18	2	119717-11340	SEAL, VALVE STEM	3							
19	2	119717-11350	SEAL, VALVE STEM	3							
20	1	22351-060012	PIN, SPRING 6.0X12	2							
21	1	119717-11200	SUPPORT ASSY, ROCKER	1							
22	2	119717-11240	SHAFT ASSY, ARM	1							
25	2	119717-11260	SUPPORT, ROCKER ARM	3							
26	2	119620-11280	SPRING, SHAFT	2							
27	2	119717-11650	ARM ASSY, ROCKER INT	6							
28	3	129150-11230	SCREW, VALVE ADJUST	6							
30	3	129150-11750	NUT, M8XP1.0	6							
31	2	22242-000120	RING, 12	2							
32	2	119260-11270	SCREW	1							
33	1	26106-080402	BOLT, M8X 40 PLATED	3							
34	1	124160-01751	CAP, FILLER	1							
35	1	119718-11380	BONNET ASSY, HEAD	1							
36	2	119717-03031	PLATE, BAFFLE	1							
37	3	119717-03070	BAFFLE, BREATHER	1							
38	2	119717-03070	BAFFLE, BREATHER	2							
39	2	129006-03120	COVER, DIAPHRAGM	1							
41	2	119718-11310	GASKET, BONNET	1							
42	2	119717-11320	COVER, BONNET	1							
43	2	119717-11331	GASKET, BONNET COVER	1							
44	2	22857-500100	SCREW, 5X10	4							
45	2	22857-500100	SCREW, 5X10	4							
46	2	22857-500160	SCREW, 5X16	2							
47	2	24341-000400	O-RING, 1AS40.0	1							
48	1	24311-000320	O-RING, 1AP32.0	1							
49	1	26106-060202	BOLT, M6X 20 PLATED	3							
50	1	26106-060752	BOLT, M6X 75 PLATED	6							
51	1	119226-07900	LIFTER, ENGINE	1							
52	1	26106-080162	BOLT, M8X 16 PLATED	2							
53	1	119718-07950	LIFTER	1							
54	1	26106-080162	BOLT, M8X 16 PLATED	2							
55	1	119718-77801	PLUG, GLOW	3							
56	1	119717-77820	CONNECTOR, GLOW PLUG	1							
57	1	119717-11800	GUIDE, VALVE	6							1

Remarks
(1)Spare parts.

N:Old $\xleftarrow[\text{No}]{\text{Yes}}$ New. Q:Old $\xleftarrow[\text{Yes}]{\text{No}}$ New. R:Old $\xleftarrow[\text{Yes}]{\text{Yes}}$ New. S:Old $\xleftarrow[\text{No}]{\text{No}}$ New. W:Add. Z:Discontinued. F:Interchangeable by set. K:Q'ty Change

Copyright (C) 2020 YANMAR GLOBAL CS CO., LTD. All RightsReserved.

Fig.5. EXHAUST MANIFOLD

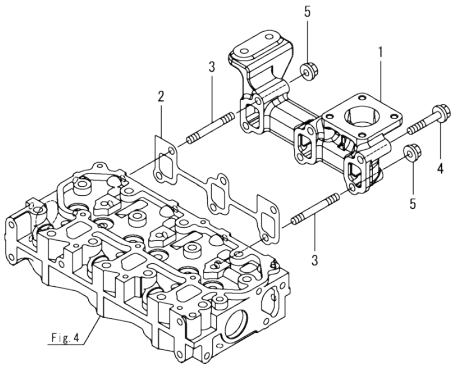

(A)=3TNV76-XSTY (D)=
(B)= (E)=
(C)= (F)=

No.	Lev.	Parts No.	Description	Q'ty (A)	(B)	(C)	(D)	(E)	(F)	I	R
1	1	119717-13109	MANIFOLD, EXHAUST	1							
2	1	119717-13110	GASKET, MANIFOLD	1							
3	1	119717-13600	STUD, M8X50	2							
4	1	129E00-13610	BOLT, M8X50 10.9	4							
5	1	26306-080002	NUT, M8	2							

N:Old ◄Yes/No► New. Q:Old ◄No/Yes► New. R:Old ◄Yes/Yes► New. S:Old ◄No/No► New. W:Add. Z:Discontinued. F:Interchangeable by set. K:Q'ty Change

Copyright (C) 2020 YANMAR GLOBAL CS CO., LTD. All RightsReserved.

Fig.6. CAMSHAFT & DRIVING GEAR

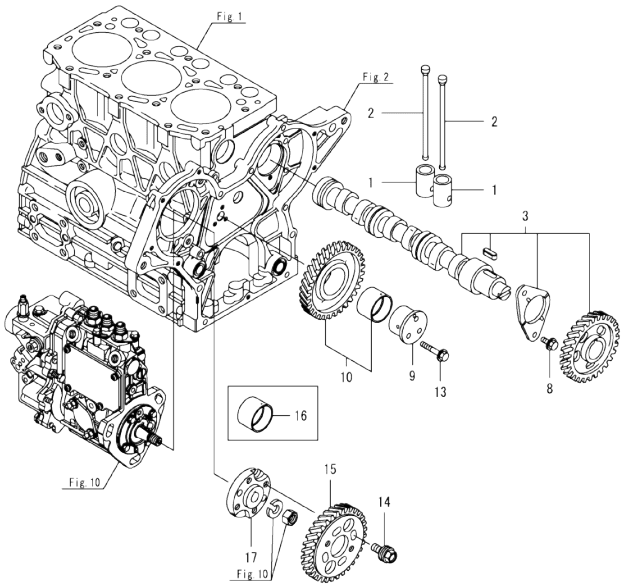

Remarks
(1)Spare parts.

(A)=3TNV76-XSTY (D)=
(B)= (E)=
(C)= (F)=

No.	Lev.	Parts No.	Description	Q'ty (A)	(B)	(C)	(D)	(E)	(F)	I	R
1	1	119620-14200	TAPPET	6							
2	1	119717-14400	ROD, PUSH	6							
3	1	119717-14581	CAMSHAFT ASSY	1							
8	1	26106-060122	BOLT, M6X 12 PLATED	2							
9	1	119717-25050	SHAFT, IDLE GEAR	1							
10	1	119717-25101	GEAR ASSY, IDLE	1							
13	1	26106-060352	BOLT, M6X 35 PLATED	3							
14	1	129150-25301	BOLT, INJECTION PUMP	4							
15	1	119717-25930	GEAR, PUMP	1							
16	1	119717-25911	BUSH, IDLE GEAR	1							1
17	1	119717-51150	FLANGE, CAMSHAFT	1							

N:Old ←Yes/No→ New. Q:Old ←No/Yes→ New. R:Old ←Yes/Yes→ New. S:Old ←No/No→ New. W:Add. Z:Discontinued. F:Interchangeable by set. K:Q'ty Change

Copyright (C) 2020 YANMAR GLOBAL CS CO., LTD. All RightsReserved.

Fig.7. CRANKSHAFT & PISTON

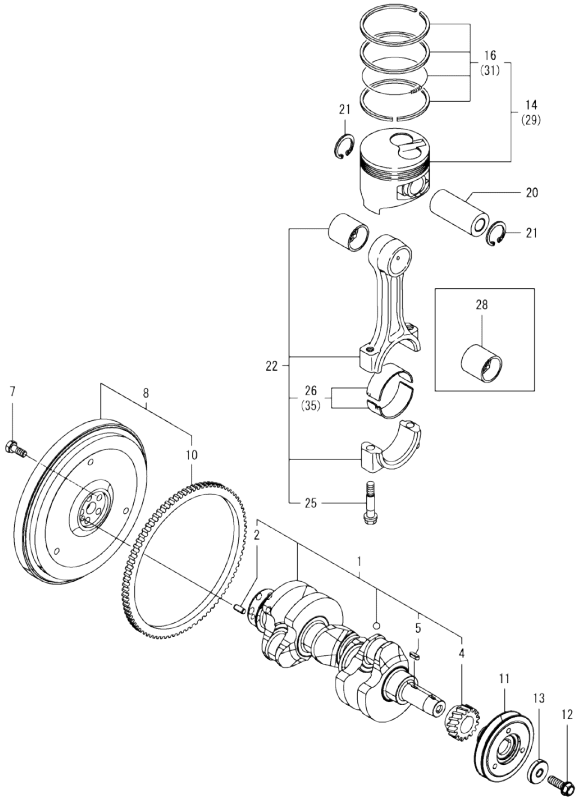

Remarks
(1)Spare parts.
(2)Under-sized(U.S.=0.25) parts.
(3)Over-sized(O.S.=0.25) parts.

(A)=3TNV76-XSTY
(B)=
(C)=
(D)=
(E)=
(F)=

No.	Lev.	Parts No.	Description	Q'ty (A)	(B)	(C)	(D)	(E)	(F)	I	R
1	1	119717-21700	CRANKSHAFT ASSY	1							
2	2	129100-01580	PIN, PARALLEL 8X16	1							
4	2	119717-21200	GEAR, CRANKSHAFT	1							
5	2	22512-040120	KEY, 4X 12	1							
7	1	119620-21500	BOLT, FLYWHEEL	5							
8	1	119385-21580	FLYWHEEL ASSY	1							
10	2	124060-21600	GEAR, RING Z=105	1							
11	1	119717-21650	V-PULLEY, CRANKSHAFT	1							
12	1	119621-21681	BOLT, FLANGE 12X1.25	1							
13	1	119620-21941	WASHER, 12	1							
14	1	119718-22080	PISTON ASSY	3							
16	2	119717-22500	RING SET, PISTON	3							
20	1	119717-22300	PIN, PISTON	3							
21	1	22252-000220	RING, 22	6							
22	1	119717-23001	ROD ASSY, CONNECTING	3							
25	2	119717-23200	BOLT, CONNECTING ROD	6							
26	2	119717-23601	METAL ASSY,CRANK PIN	3							
28	1	119717-23910	METAL, PISTON PIN	3							1
29	1	119718-22090	PISTON ASSY, 0.25 OS	3							3
31	2	119717-22550	RING SET, PISTON .25	3							3
35	1	119717-23611	METAL ASSY, PIN .25	3							2

N:Old ←Yes/No→ New. Q:Old ←No/Yes→ New. R:Old ←Yes/Yes→ New. S:Old ←No/No→ New. W:Add. Z:Discontinued. F:Interchangeable by set. K:Q'ty Change

Copyright (C) 2020 YANMAR GLOBAL CS CO., LTD. All RightsReserved.

Fig.8. LUB. OIL SYSTEM

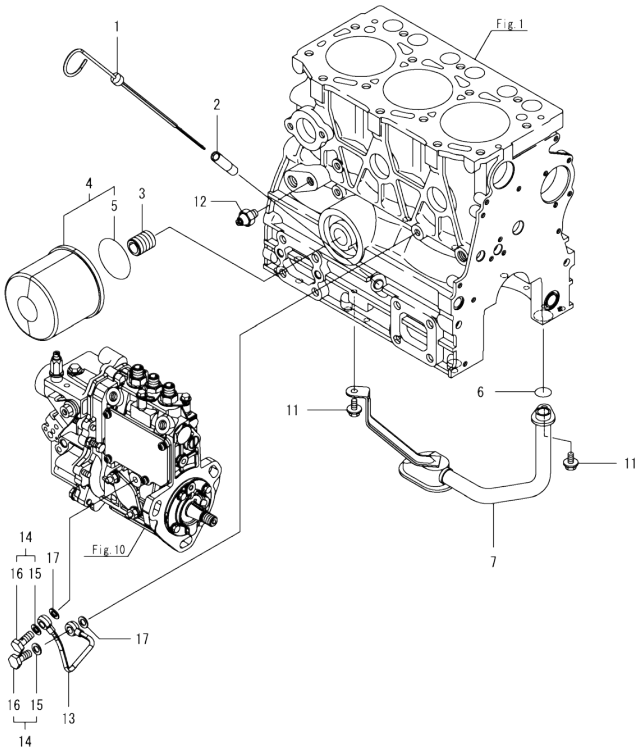

(A)=3TNV76-XSTY
(B)=
(C)=
(D)=
(E)=
(F)=

No.	Lev.	Parts No.	Description	Q'ty (A)	(B)	(C)	(D)	(E)	(F)	I	R
1	1	119717-34801	DIPSTICK, OIL	1							
2	1	121520-34810	GUIDE, DIPSTICK	1							
3	1	119717-35140	STUD	1							
4	1	119660-35150	FILTER ASSY, D80XL75	1							
5	2	124450-35110	O-RING, OIL FILTER	1							
6	1	119717-32060	O-RING, P15.0	1							
7	1	119717-35080	PIPE ASSY, OIL INLET	1							
11	1	26106-060102	BOLT, M6X 10 PLATED	2							
12	1	121252-39450	SWITCH, HYDRAULIC	1							
13	1	119717-39210	PIPE, PUMP	1							
14	1	129005-59830	BOLT ASSY, JOINT M8	2							
15	2	22190-080002	WASHER, SEAL 8	2							
16	2	23857-030000	BOLT, JOINT 3	2							
17	1	22190-080002	WASHER, SEAL 8	2							

N:Old ←Yes/No→ New. Q:Old ←No/Yes→ New. R:Old ←Yes/Yes→ New. S:Old ←No/No→ New. W:Add. Z:Discontinued. F:Interchangeable by set. K:Q'ty Change

Copyright (C) 2020 YANMAR GLOBAL CS CO., LTD. All RightsReserved.

Fig.9. COOLING WATER SYSTEM

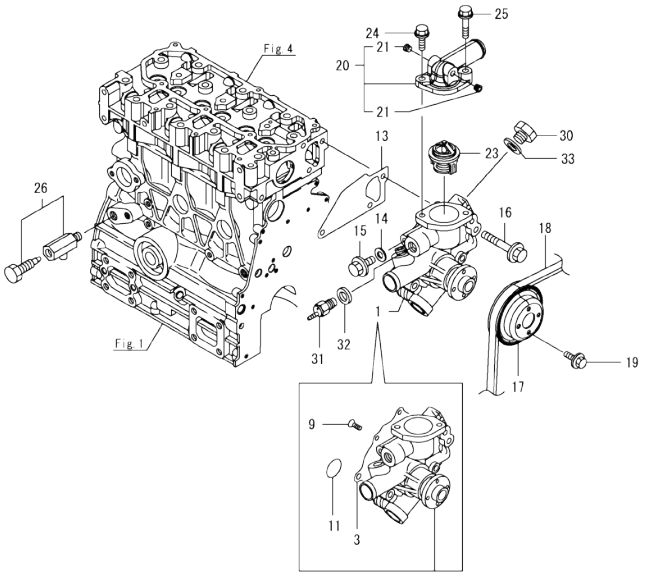

(A)=3TNV76-XSTY
(B)=
(C)=
(D)=
(E)=
(F)=

No.	Lev.	Parts No.	Description	Q'ty (A)	(B)	(C)	(D)	(E)	(F)	I	R
1	1	119E10-42001	PUMP ASSY, CW	1							
3	2	119717-42031	GASKET, WATER PUMP	1							
9	2	26577-060122	SCREW, M6X12	4							
11	2	119C10-42320	O-RING, 2028	1							
13	1	119717-42020	GASKET, WATER PUMP	1							
14	1	23414-080000	GASKET, 8X1.0	1							
15	1	26106-080122	BOLT, M8X 12 PLATED	1							
16	1	26106-080502	BOLT, M8X 50 PLATED	3							
17	1	119717-42350	V-PULLEY, PUMP D=100	1							
18	1	129612-42310	V-BELT, A36.5	1							
19	1	26106-060122	BOLT, M6X 12 PLATED	4							
20	1	119718-49550	COVER ASSY	1							
21	2	119285-01731	PLUG, SCREW NPT1/8	2							
23	1	119717-49800	THERMOSTAT, 71C	1							
24	1	26106-080202	BOLT, M8X 20 PLATED	1							
25	1	26106-080302	BOLT, M8X 30 PLATED	1							
26	1	119620-49290	COCK ASSY, 1/4	1							
30	1	121450-42450	PLUG, M16	1							
31	1	121250-44901	SWITCH, TEMPERATURE	1							
32	1	124465-44950	GASKET, 16	1							
33	1	124465-44950	GASKET, 16	1							

N:Old ◄Yes/No► New. Q:Old ◄No/Yes► New. R:Old ◄Yes/Yes► New. S:Old ◄No/No► New. W:Add. Z:Discontinued. F:Interchangeable by set. K:Q'ty Change

Copyright (C) 2020 YANMAR GLOBAL CS CO., LTD. All RightsReserved.

Fig.10. FUEL INJECTION PUMP

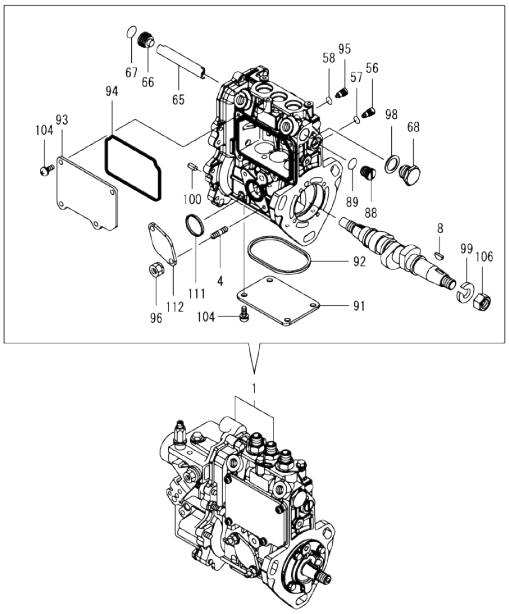

(A)=3TNV76-XSTY (D)=
(B)= (E)=
(C)= (F)=

No.	Lev.	Parts No.	Description	Q'ty (A)	(B)	(C)	(D)	(E)	(F)	I	R
1	1	719715-51360	FIE ASSY	1							1
4	2	129155-51020	STUD	2							
8	2	122710-51090	KEY, FEATHER	1							
56	2	158600-51270	STOPPER, TAPPET	3							
57	2	129155-51280	O-RING, S6	3							
58	2	129155-51280	O-RING, S6	1							
65	2	129155-51400	PROTECTOR	1							
66	2	158600-51410	PLUG, DEFLIFTER M12	1							
67	2	119717-51420	O-RING	1							
68	2	158600-51420	PLUG, DEFLIFTER M16	1							
88	2	158600-51570	PLUG, RACK	1							
89	2	129155-51580	O-RING	1							
91	2	129155-51701	COVER, PUMP BOTTOM	1							
92	2	119717-51711	GASKET, PUMP	1							
93	2	119717-51750	COVER, BODY SIDE	1							
94	2	119717-51761	GASKET, PUMP COVER	1							
95	2	158600-51790	STOPPER, RACK	1							
96	2	119717-51860	NUT, M6	2							
98	2	22190-160002	WASHER, SEAL 16	1							
99	2	22217-120000	WASHER, SPRING 12	1							
100	2	22351-050010	PIN, SPRING 5.0X10	2							
104	2	26022-050122	SCREW, M5X12	8							
106	2	26716-120002	NUT, M12	1							
111	2	129155-52051	GASKET, PUMP COVER	1							
112	2	129100-52200	COVER, FEED PUMP	1							

Remarks
(1)Governor(Fig.11) is incorporated in this Fuel Injection Pump(No.1).

N:Old ←Yes/No→ New, Q:Old ←No/Yes→ New, R:Old ←Yes/Yes→ New, S:Old ←No/No→ New, W:Add, Z:Discontinued, F:Interchangeable by set, K:Q'ty Change

Copyright (C) 2020 YANMAR GLOBAL CS CO., LTD. All RightsReserved.

Fig.11. GOVERNOR

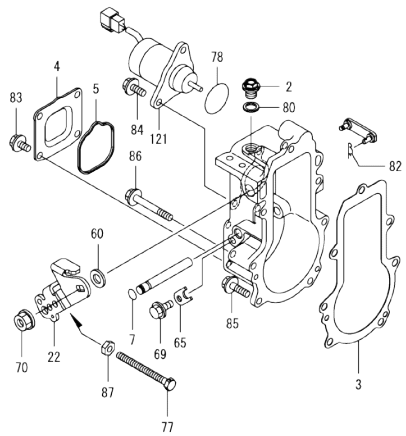

(A)=3TNV76-XSTY
(B)=
(C)=
(D)=
(E)=
(F)=

No.	Lev.	Parts No.	Description	Q'ty (A)	(B)	(C)	(D)	(E)	(F)	I	R
2	2	119717-51930	PLUG, M10	1							
3	2	119717-61050	GASKET, CASE	1							
4	2	119717-61060	COVER, GOVERNOR CASE	1							
5	2	119717-61070	GASKET, COVER	1							
7	2	129155-51280	O-RING, S6	1							
22	2	119515-61440	LEVER, CONTROL	1							
60	2	158552-61700	SHIM SET	1							
65	2	119660-61901	STOPPER, SHAFT	1							
69	2	26106-060102	BOLT, M6X 10 PLATED	1							
70	2	26366-080002	NUT, M8	1							
77	2	171353-61461	BOLT, IDLE	1							
78	2	158552-61900	O-RING	1							
80	2	22190-100002	WASHER, SEAL 10	1							
82	2	22372-040000	PIN, SNAP 4	1							
83	2	26106-060102	BOLT, M6X 10 PLATED	4							
84	2	26106-060142	BOLT, M6X 14 PLATED	2							
85	2	26106-060202	BOLT, M6X 20 PLATED	4							
86	2	26106-060452	BOLT, M6X 45 PLATED	3							
87	2	119740-61470	NUT	1							
121	2	129630-77900	SOLENOID, STOP	1							

Remarks
* This figure(Governor) is incorporated in the Fuel Injection Pump(Fig.10).

N:Old ◄Yes/No► New. Q:Old ◄No/Yes► New. R:Old ◄Yes/Yes► New. S:Old ◄No/No► New. W:Add. Z:Discontinued. F:Interchangeable by set. K:Q'ty Change

Copyright (C) 2020 YANMAR GLOBAL CS CO., LTD. All RightsReserved.

Fig.12. FUEL INJECTION VALVE

(A)=3TNV76-XSTY
(B)=
(C)=
(D)=
(E)=
(F)=

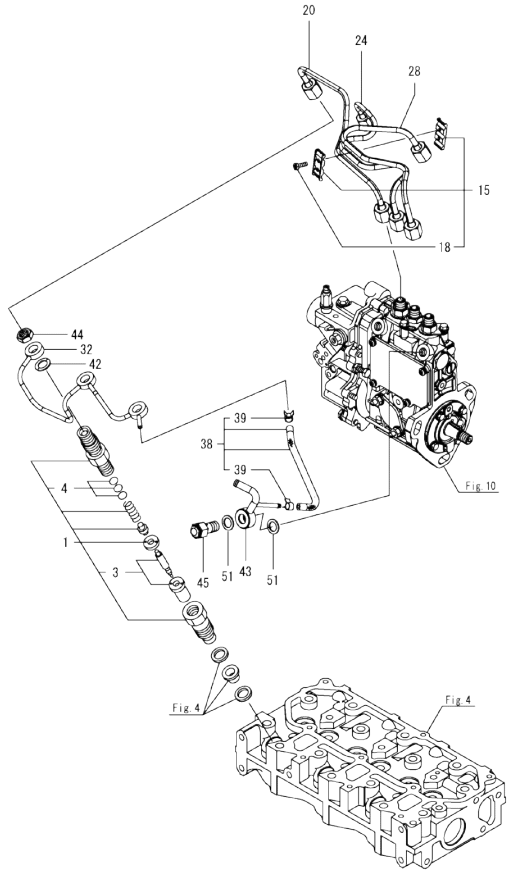

No.	Lev.	Parts No.	Description	Q'ty (A)	(B)	(C)	(D)	(E)	(F)	I	R
1	1	119717-53001	VALVE ASSY,INJECTION	3							
3	2	119717-53010	VALVE ASSY,INJECTION	3							
4	2	129901-53800	SHIM SET, ADJUSTING	3							1
15	1	129150-59120	RETAINER, PIPE	1							
18	2	129150-59131	BOLT, M4X14	2							
20	1	119717-59810	PIPE, INJECTION NO.1	1							
24	1	119717-59820	PIPE, INJECTION NO.2	1							
28	1	119717-59830	PIPE, INJECTION NO.3	1							
32	1	119717-59510	PIPE ASSY, RETURN	1							
38	1	119744-59560	HOSE ASSY, RETURN	1							
39	2	124066-59100	CLAMP, HOSE 8	2							
42	1	129901-59560	GASKET, FUEL RETURN	3							
43	1	119515-59581	JOINT, OVERFLOW	1							
44	1	119620-59700	NUT, NOZZLE RETURN	3							
45	1	119813-59950	VALVE ASSY, CHECK	1							
51	1	22190-120002	WASHER, SEAL 12	2							

Remarks
(1)Spare parts.

N:Old ←Yes/No→ New. Q:Old ←No/Yes→ New. R:Old ←Yes/Yes→ New. S:Old ←No/No→ New. W:Add. Z:Discontinued. F:Interchangeable by set. K:Q'ty Change

Copyright (C) 2020 YANMAR GLOBAL CS CO., LTD. All RightsReserved.

Fig.13. FUEL PIPE

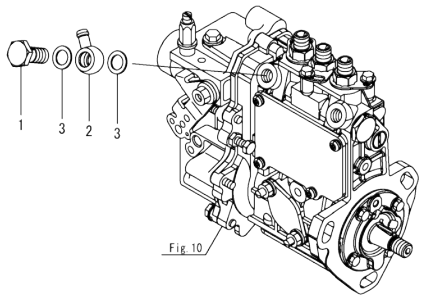

(A)=3TNV76-XSTY
(B)=
(C)=
(D)=
(E)=
(F)=

No.	Lev.	Parts No.	Description	Q'ty (A)	(B)	(C)	(D)	(E)	(F)	I	R
1	1	103854-39140	BOLT, PIPE JOINT	1							
2	1	101304-59020	JOINT, PIPE 12	1							
3	1	22190-120002	WASHER, SEAL 12	2							

N:Old ◄Yes/No► New. Q:Old ◄No/Yes► New. R:Old ◄Yes/Yes► New. S:Old ◄No/No► New. W:Add. Z:Discontinued. F:Interchangeable by set. K:Q'ty Change

Copyright (C) 2020 YANMAR GLOBAL CS CO., LTD. All RightsReserved.

Fig.14. STARTER MOTOR

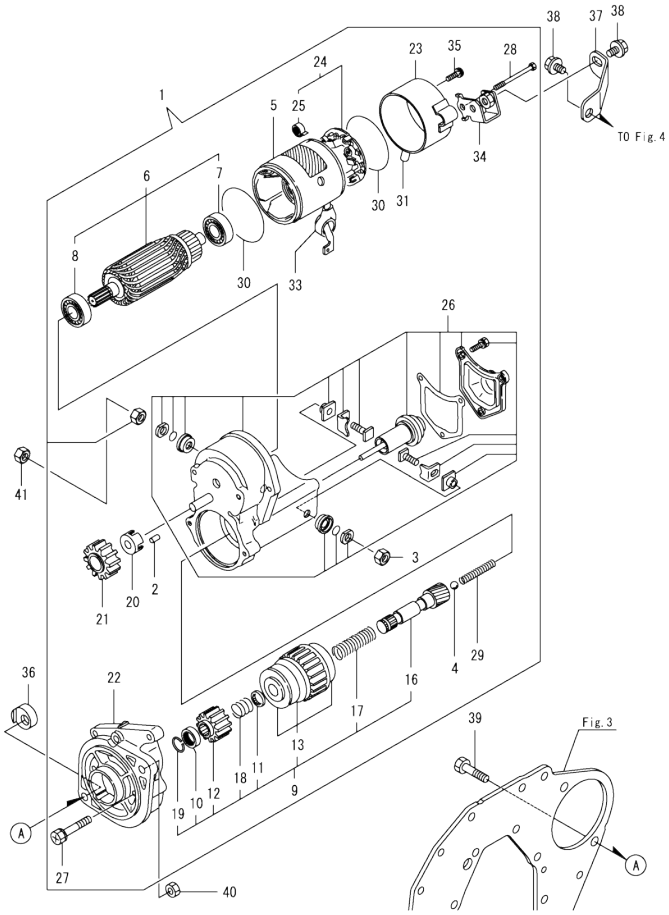

(A)=3TNV76-XSTY
(B)=
(C)=
(D)=
(E)=
(F)=

No.	Lev.	Parts No.	Description	Q'ty (A)	(B)	(C)	(D)	(E)	(F)	I	R
1	1	119209-77010	STARTER, 1.4 R	1							
2	2	X0283060061	ROLLER	5							
3	2	X9490561370	NUT	1							
4	2	X9491200240	BALL, STEEL	1							
5	2	129407-77210	YOKE ASSY	1							
6	2	129407-77220	ARMATURE ASSY	1							
7	3	129129-77230	BEARING, BALL	1							
8	3	129129-77240	BEARING, BALL	1							
9	2	121120-77250	STARTER	1							
10	3	X0280210230	NUT, PINION STOP	1							
11	3	X0283270140	RETAINER, SNAP	1							
12	3	X0283711770	PINION, STARTER	1							
13	3	129129-77390	CLUTCH ASSY, STARTER	1							
16	3	129129-77400	SHAFT, STARTER	1							
17	3	129129-77410	SPRING, COIL	1							
18	3	129407-77410	SPRING, COIL	1							
19	3	129129-77430	RING, SNAP	1							
20	2	129129-77260	RETAINER	1							
21	2	129129-77270	PINION	1							
22	2	119209-77280	HOUSING	1							
23	2	129407-77290	FRAME	1							
24	2	129407-77300	HOLDER ASSY	1							
25	3	X9491730461	SPRING, BRUSH	4							
26	2	119209-77310	SWITCH ASSY, MAGNET	1							
27	2	129129-77320	BOLT, W/WASHER	2							
28	2	129407-77330	BOLT	2							
29	2	129129-77340	SPRING	1							
30	2	129129-77350	O-RING	2							
31	2	129129-77362	COVER	1							
33	2	129129-77380	CAP	1							
34	2	119209-77460	STAY	1							
35	2	129129-77460	SCREW	2							
36	1	119285-77050	NUT, STARTER	1							
37	1	119718-77900	SUPPORT, STARTER	1							
38	1	26106-080142	BOLT, M8X 14 PLATED	2							
39	1	26156-120402	BOLT, M12X 40 PLATED	2							
40	1	26736-120002	NUT, M12	1							
41	1	26756-080002	NUT, LOCK M8	1							

N:Old ←Yes/No→ New. Q:Old ←No/Yes→ New. R:Old ←Yes/Yes→ New. S:Old ←No/No→ New. W:Add. Z:Discontinued. F:Interchangeable by set. K:Q'ty Change

Copyright (C) 2020 YANMAR GLOBAL CS CO., LTD. All RightsReserved.

Fig.15. TENSION PULLEY

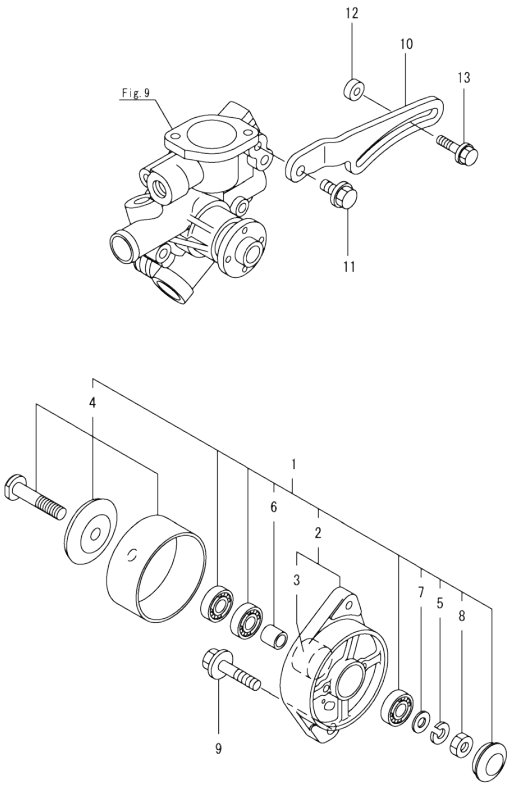

(A)=3TNV76-XSTY
(B)=
(C)=
(D)=
(E)=
(F)=

No.	Lev.	Parts No.	Description	Q'ty (A)	(B)	(C)	(D)	(E)	(F)	I	R
1	1	129100-44300	PULLEY, TENSION	1							
2	2	129100-44310	PLATE ASSY	1							
3	3	129100-44320	PLATE, COIL	1							
4	2	129100-44330	FLYWHEEL ASSY	1							
5	2	129188-77200	WASHER, SPRING	1							
6	2	129118-77230	COLLAR	1							
7	2	129118-77240	WASHER, 10	1							
8	2	129118-77250	NUT, HEXAGON	1							
9	1	26106-100402	BOLT, M10X 40 PLATED	1							
10	1	119742-77300	ADJUSTER, BELT	1							
11	1	26106-080202	BOLT, M8X 20 PLATED	1							
12	1	119940-77270	SPACER, GENERATOR	1							
13	1	129972-77341	BOLT, ADJUSTER L=50	1							

N:Old ◄Yes/No► New. Q:Old ◄No/Yes► New. R:Old ◄Yes/Yes► New. S:Old ◄No/No► New. W:Add. Z:Discontinued. F:Interchangeable by set. K:Q'ty Change

Copyright (C) 2020 YANMAR GLOBAL CS CO., LTD. All RightsReserved.

Fig.16. ACCESSORY

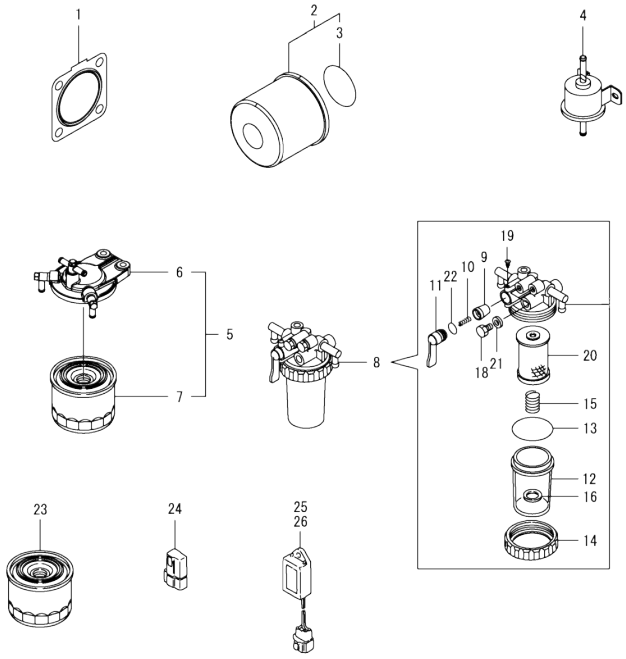

(A)=3TNV76-XSTY
(B)=
(C)=
(D)=
(E)=
(F)=

No.	Lev.	Parts No.	Description	Q'ty (A)	(B)	(C)	(D)	(E)	(F)	I	R
1	1	119515-13200	GASKET, SILENCER	1							
2	1	119660-35150	FILTER ASSY, OIL	1							
3	2	124450-35110	O-RING, OIL FILTER	1							
4	1	129612-52100	PUMP, FUEL FEED	1							
5	1	119541-55620	FILTER ASSY, FO	1							
6	2	119934-55611	BRACKET, FILTER	1							
7	2	129004-55801	FILTER, FUEL OIL	1							
8	1	129335-55701	SEPARATOR ASSY,WATER	1							
9	2	104200-55321	VALVE, TAPER	1							
10	2	104200-55330	SPRING, TAPER VALVE	1							
11	2	104200-55341	HANDLE, COCK	1							
12	2	124064-55510	BOWL, STRAINER	1							
13	2	102103-55520	O-RING	1							
14	2	110250-55610	RING, RETAINING	1							
15	2	121257-55720	SPRING, SCREEN	1							
16	2	121257-55731	FLOAT	1							
18	2	101720-55750	PLUG, 6	2							
19	2	104200-55750	SCREW,COCK HANDLE M4	1							
20	2	171081-55910	SCREEN, 100M	1							
21	2	23418-060000	GASKET, 6 X 1.0	2							
22	2	24311-240100	PACKING, P 10A	1							
23	1	129004-55801	FILTER, FUEL OIL	1							
24	1	119643-66900	DIODE	1							
25	1	128300-77920	TIMER, GLOW PLUG	1							
26	1	129211-77920	TIMER, SECTION 1	1							

N:Old ←Yes/No→ New. Q:Old ←No/Yes→ New, R:Old ←Yes/Yes→ New. S:Old ←No/No→ New. W:Add. Z:Discontinued. F:Interchangeable by set. K:Q'ty Change

Copyright (C) 2020 YANMAR GLOBAL CS CO., LTD. All RightsReserved.

Parts No. Index

Parts No.	Fig. No.	Ref. No.
101304-59020	13	2
101720-55750	16	18
102103-55520	16	13
103854-39140	13	1
104200-55321	16	9
104200-55330	16	10
104200-55341	16	11
104200-55750	16	19
105010-11490	4	3
105311-01090	1	5
110250-55610	16	14
119209-77010	14	1
119209-77280	14	22
119209-77310	14	26
119209-77460	14	34
119226-07900	4	51
119260-11270	4	32
119285-01580	3	5
119285-01731	9	21
119285-01990	1	8
119285-11990	4	11
119285-77050	14	36
119385-21580	7	8
119515-13200	16	1
119515-59581	12	43
119515-61440	11	22
119541-55620	16	5
119600-11460	4	2
119620-01620	3	6
119620-02020	1	9
119620-11280	4	26
119620-14200	6	1
119620-21500	7	7
119620-21941	7	13
119620-49290	9	26
119620-59700	12	44
119621-21681	7	12
119623-01250	1	6
119624-32040	2	18
119640-01640	3	13
119643-66900	16	24
119660-01911	2	17
119660-35150	8	4
	16	2
119660-61901	11	65
119717-01331	1	27
119717-01501	2	1
119717-01521	2	5
119717-01570	2	2
119717-01740	3	11

Parts No.	Fig. No.	Ref. No.
119717-01750	2	16
119717-01800	2	7
119717-02411	1	12
119717-02930	1	23
119717-03031	4	36
119717-03070	4	37
		38
119717-11101	4	13
119717-11110	4	14
119717-11131	4	15
119717-11190	4	17
119717-11200	4	21
119717-11240	4	22
119717-11260	4	25
119717-11320	4	42
119717-11331	4	43
119717-11340	4	18
119717-11350	4	19
119717-11650	4	27
119717-11740	4	4
119717-11800	4	57
119717-13109	5	1
119717-13110	5	2
119717-13600	5	3
119717-14400	6	2
119717-14581	6	3
119717-21200	7	4
119717-21650	7	11
119717-21700	7	1
119717-22300	7	20
119717-22500	7	16
119717-22550	7	31
119717-23001	7	22
119717-23200	7	25
119717-23601	7	26
119717-23611	7	35
119717-23910	7	28
119717-25050	6	9
119717-25101	6	10
119717-25911	6	16
119717-25930	6	15
119717-32050	2	19
119717-32060	8	6
119717-32080	2	9
119717-32100	2	8
119717-32110	2	13
119717-32120	2	14
119717-34801	8	1
119717-35080	8	7
119717-35140	8	3

Parts No.	Fig. No.	Ref. No.
119717-39210	8	13
119717-42020	9	13
119717-42031	9	3
119717-42350	9	17
119717-49800	9	23
119717-51150	6	17
119717-51420	10	67
119717-51711	10	92
119717-51750	10	93
119717-51761	10	94
119717-51860	10	96
119717-51930	11	2
119717-53001	12	1
119717-53010	12	3
119717-59510	12	32
119717-59810	12	20
119717-59820	12	24
119717-59830	12	28
119717-61050	11	3
119717-61060	11	4
119717-61070	11	5
119717-77820	4	56
119718-01600	3	2
119718-01640	3	7
119718-07950	4	53
119718-11310	4	41
119718-11380	4	35
119718-22080	7	14
119718-22090	7	29
119718-49550	9	20
119718-77801	4	55
119718-77900	14	37
119734-01590	2	3
119734-02220	3	9
119740-61470	11	87
119742-77300	15	10
119744-59560	12	38
119802-32130	2	15
119810-01200	1	26
119810-02941	1	34
119813-59950	12	45
119934-55611	16	6
119940-77270	15	12
119C10-42320	9	11
119E10-42001	9	1
121120-77250	14	9
121250-44901	9	31
121252-39450	8	12
121257-55720	16	15
121257-55731	16	16

Parts No.	Fig. No.	Ref. No.
121450-42450	9	30
121520-34810	8	2
121850-51960	2	20
122710-51090	10	8
124060-01050	1	4
124060-21600	7	10
124064-55510	16	12
124066-59100	12	39
124160-01751	2	28
	4	34
124160-01910	1	7
124450-35110	8	5
	16	3
124465-44950	9	32
		33
128300-77920	16	25
129001-32320	2	11
129001-32330	2	12
129004-55801	16	7
		23
129005-59830	8	14
129006-03120	4	39
129100-01580	3	1
	7	2
129100-01760	3	12
129100-44300	15	1
129100-44310	15	2
129100-44320	15	3
129100-44330	15	4
129100-52200	10	112
129118-77230	15	6
129118-77240	15	7
129118-77250	15	8
129129-77230	14	7
129129-77240	14	8
129129-77260	14	20
129129-77270	14	21
129129-77320	14	27
129129-77340	14	29
129129-77350	14	30
129129-77362	14	31
129129-77380	14	33
129129-77390	14	13
129129-77400	14	16
129129-77410	14	17
129129-77430	14	19
129129-77460	14	35
129150-11230	4	28
129150-11750	4	30
129150-25301	6	14

Parts No. Index

Parts No.	Fig. No.	Ref. No.
129150-59120	12	15
129150-59131	12	18
129155-51020	10	4
129155-51280	10	57
		58
	11	7
129155-51400	10	65
129155-51580	10	89
129155-51701	10	91
129155-52051	10	111
129188-77200	15	5
129211-77920	16	26
129335-55701	16	8
129407-77210	14	5
129407-77220	14	6
129407-77290	14	23
129407-77300	14	24
129407-77330	14	28
129407-77410	14	18
129508-11180	4	16
129612-42310	9	18
129612-52100	16	4
129630-77900	11	121
129900-32130	2	10
129901-11450	4	1
129901-53800	12	4
129901-59560	12	42
129972-77341	15	13
129E00-13610	5	4
158552-61700	11	60
158552-61900	11	78
158600-51270	10	56
158600-51410	10	66
158600-51420	10	68
158600-51570	10	88
158600-51790	10	95
171081-55910	16	20
171353-61461	11	77
22190-080002	8	15
		17
22190-100002	11	80
22190-120002	12	51
	13	3
22190-160002	10	98
22190-220002	3	15
22217-120000	10	99
22242-000120	4	31
22252-000220	7	21
22351-050010	10	100
22351-060012	4	20

Parts No.	Fig. No.	Ref. No.
22372-040000	11	82
22512-040120	7	5
22857-500100	4	44
		45
22857-500160	4	46
23414-080000	9	14
23418-060000	16	21
23857-030000	8	16
23876-005000	4	12
23876-030000	2	6
24311-000320	2	29
	4	48
24311-240100	16	22
24341-000400	4	47
26022-050122	10	104
26106-060102	8	11
	11	69
		83
26106-060122	2	21
	6	8
	9	19
26106-060142	11	84
26106-060162	2	22
26106-060202	4	49
	11	85
26106-060222	3	10
26106-060352	6	13
26106-060402	2	23
		24
26106-060452	11	86
26106-060602	2	25
26106-060652	2	26
26106-060752	4	50
26106-080122	3	16
	9	15
26106-080142	14	38
26106-080162	4	52
		54
26106-080202	9	24
	15	11
26106-080302	9	25
26106-080402	4	33
26106-080452	3	17
26106-080502	9	16
26106-100402	15	9
26156-120402	14	39
26206-100202	3	3
26206-100252	3	4
26306-080002	2	27
	5	5

Parts No.	Fig. No.	Ref. No.
26366-080002	11	70
26577-060122	9	9
26716-120002	10	106
26736-120002	14	40
26756-080002	14	41
27241-120000	1	13
719715-51360	10	1
719717-01561	1	1
719717-02901	1	28
719717-02911	1	31
719734-01500	2	4
X0280210230	14	10
X0283060061	14	2
X0283270140	14	11
X0283711770	14	12
X9490561370	14	3
X9491200240	14	4
X9491730461	14	25

Parts No.	Fig. No.	Ref. No.