YANMAR

# PARTS CATALOG

0CD50-M00240EN

Last update May., 2021

# PREFACE

This parts catalog is the 1st edition of 3TNV80F-SDKTF for Tong Yang Moolsan Co., Ltd.

Published : April, 2014

# Contents

0CD50-M00240


| Fig. No. | Fig. Name |
|---|---|
| 3TNV80F-SDKTF | |
| 1. | CYLINDER BLOCK |
| 2. | GEAR HOUSING |
| 3. | OIL SUMP |
| 4. | CYLINDER HEAD & BONNET |
| 5. | EXHAUST MANIFOLD |
| 6. | CAMSHAFT & DRIVING GEAR |
| 7. | CRANKSHAFT & PISTON |
| 8. | LUB. OIL SYSTEM |
| 9. | COOLING WATER SYSTEM |
| 10. | FUEL INJECTION PUMP |
| 11. | GOVERNOR |
| 12. | FUEL INJECTION VALVE |
| 13. | FUEL FILTER |
| 14. | STARTING MOTOR |
| 15. | GENERATOR |
| 16. | GASKET SET |

| Fig. No. | Fig. Name |
|---|---|

# Fig.1. CYLINDER BLOCK



(A)=3TNV80F-SDKTF
(B)=
(C)=
(D)=
(E)=
(F)=

| No. | Lev. | Parts No. | Description | Q'ty (A) | (B) | (C) | (D) | (E) | (F) | I | R |
|---|---|---|---|---|---|---|---|---|---|---|---|
| 1 | 1 | 119E00-01560 | BLOCK ASSY, CYLINDER | 1 | | | | | | | |
| 4 | 2 | 105311-01090 | PLUG, 30 | 4 | | | | | | | |
| 5 | 2 | 119623-01250 | PLUG, 45 | 1 | | | | | | | |
| 6 | 2 | 119285-01990 | PLUG, 25 | 3 | | | | | | | |
| 7 | 2 | 119620-02020 | BOLT, METAL CAP | 8 | | | | | | | |
| 10 | 2 | 119717-02411 | BUSH, CAMSHAFT | 1 | | | | | | | |
| 11 | 2 | 124060-01050 | PLUG, PT1/8 | 1 | | | | | | | |
| 12 | 2 | 124160-01910 | PLUG, PT1/4 | 1 | | | | | | | |
| 13 | 2 | 27241-120000 | PLUG, 12 | 1 | | | | | | | |
| 23 | 2 | 119717-02930 | BEARING, THRUST | 2 | | | | | | | |
| 26 | 1 | 119810-01200 | BOLT, HEAD | 14 | | | | | | | |
| 27 | 1 | 119E10-01330 | GASKET SET, HEAD | 1 | | | | | | | |
| 28 | 1 | 129100-01580 | PIN, 8X16 | 2 | | | | | | | |
| 29 | 1 | 719717-02901 | BEARING, MAIN | 4 | | | | | | | 1 |
| 32 | 1 | 719717-02911 | BEARING, 0.25 US | 4 | | | | | | | 2 |
| 35 | 1 | 119810-02941 | BEARING, THRUST 0.25 | 2 | | | | | | | 3 |

Remarks
(1)Spare parts.
(2)Under-sized(U.S.=0.25) parts.
(3)Over-sized(O.S.=0.25) parts.

N:Old ◄Yes/No► New. Q:Old ◄No/Yes► New. R:Old ◄Yes/Yes► New. S:Old ◄No/No► New. W:Add. Z:Discontinued. F:Interchangeable by set. K:Q'ty Change

Copyright (C) 2014 YANMAR GLOBAL CS CO., LTD. All RightsReserved.

# Fig.2. GEAR HOUSING



(A)=3TNV80F-SDKTF
(B)=
(C)=
(D)=
(E)=
(F)=

| No. | Lev. | Parts No. | Description | Q'ty (A) | (B) | (C) | (D) | (E) | (F) | I | R |
|---|---|---|---|---|---|---|---|---|---|---|---|
| 1 | 1 | 119740-01501 | CASE, GEAR | 1 | | | | | | | |
| 2 | 1 | 119717-01570 | STUD | 3 | | | | | | | |
| 3 | 1 | 119751-01590 | COVER ASSY,GEAR CASE | 1 | | | | | | | |
| 4 | 2 | 719751-01500 | COVER ASSY,GEAR CASE | 1 | | | | | | | |
| 5 | 3 | 119751-01521 | COVER, GEAR CASE | 1 | | | | | | | |
| 6 | 4 | 23876-030000 | PLUG, R03 | 2 | | | | | | | |
| 7 | 3 | 119717-01800 | SEAL, OIL | 1 | | | | | | | |
| 8 | 3 | 24101-062024 | BEARING, BALL 6202 | 1 | | | | | | | |
| 9 | 2 | 119717-32100 | COVER ASSY | 1 | | | | | | | |
| 10 | 3 | 119717-32080 | COVER | 1 | | | | | | | |
| 11 | 3 | 129900-32130 | VALVE, RELIEF | 1 | | | | | | | |
| 12 | 3 | 129001-32320 | SPRING | 1 | | | | | | | |
| 13 | 3 | 129001-32330 | PLUG | 1 | | | | | | | |
| 14 | 2 | 119717-32110 | ROTOR, INNER | 1 | | | | | | | |
| 15 | 2 | 119717-32120 | ROTOR, OUTER | 1 | | | | | | | |
| 16 | 2 | 119802-32130 | SCREW, M6X16 | 8 | | | | | | | |
| 17 | 1 | 119717-01750 | COVER | 1 | | | | | | | |
| 18 | 1 | 119660-01911 | PIPE, KNOCK | 4 | | | | | | | |
| 19 | 1 | 119624-32040 | O-RING, P12.0 | 1 | | | | | | | |
| 20 | 1 | 119717-32050 | O-RING, P17.0 | 3 | | | | | | | |
| 21 | 1 | 121850-51960 | O-RING | 1 | | | | | | | |
| 22 | 1 | 26106-060122 | BOLT, M6X 12 PLATED | 1 | | | | | | | |
| 23 | 1 | 26106-060162 | BOLT, M6X 16 PLATED | 4 | | | | | | | |
| 24 | 1 | 26106-060402 | BOLT, M6X 40 PLATED | 4 | | | | | | | |
| 25 | 1 | 26106-060402 | BOLT, M6X 40 PLATED | 2 | | | | | | | |
| 26 | 1 | 26106-060602 | BOLT, M6X 60 PLATED | 7 | | | | | | | |
| 27 | 1 | 26106-060652 | BOLT, M6X 65 PLATED | 2 | | | | | | | |
| 28 | 1 | 26306-080002 | NUT, M8 | 3 | | | | | | | |
| 29 | 1 | 124160-01751 | COVER, FILLER | 1 | | | | | | | |
| 30 | 1 | 24311-000320 | O-RING, 1AP32.0 | 1 | | | | | | | |
| 31 | 1 | 124240-01871 | COVER | 1 | | | | | | | |
| 32 | 1 | 129C26-01890 | GASKET, HO-P | 1 | | | | | | | |
| 33 | 1 | 22190-080002 | WASHER, SEAL 8 | 1 | | | | | | | |
| 34 | 1 | 26106-080122 | BOLT, M8X 12 PLATED | 1 | | | | | | | |
| 35 | 1 | 124240-01871 | COVER | 1 | | | | | | | |
| 36 | 1 | 129C26-01890 | GASKET, HO-P | 1 | | | | | | | |
| 37 | 1 | 22190-080002 | WASHER, SEAL 8 | 1 | | | | | | | |
| 38 | 1 | 26106-080142 | BOLT, M8X 14 PLATED | 1 | | | | | | | |
| 39 | 1 | 26106-080702 | BOLT, M8X 70 PLATED | 3 | | | | | | | |
| 40 | 1 | 26306-080002 | NUT, M8 | 1 | | | | | | | |
| 41 | 1 | 26306-080002 | NUT, M8 | 2 | | | | | | | |
| 42 | 1 | 121023-01551 | COVER | 1 | | | | | | | |
| 43 | 1 | 24341-000240 | O-RING, 1AS24.0 | 1 | | | | | | | |
| 44 | 1 | 26106-060162 | BOLT, M6X 16 PLATED | 2 | | | | | | | |

N:Old ◄Yes/No► New. Q:Old ◄No/Yes► New. R:Old ◄Yes/Yes► New. S:Old ◄No/No► New. W:Add. Z:Discontinued. F:Interchangeable by set. K:Q'ty Change

Copyright (C) 2014 YANMAR GLOBAL CS CO., LTD. All RightsReserved.

# Fig.3. OIL SUMP

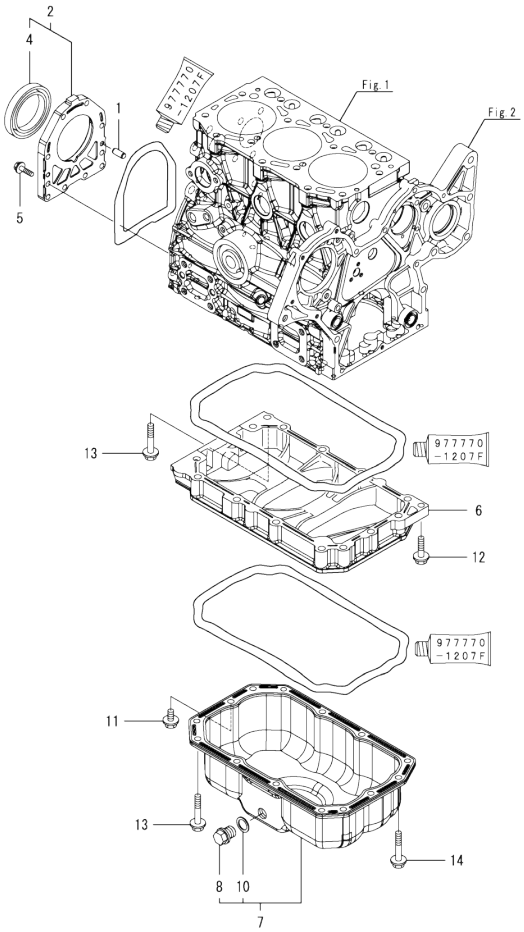




(A)=3TNV80F-SDKTF (D)=
(B)= (E)=
(C)= (F)=

| No. | Lev. | Parts No. | Description | Q'ty (A) | (B) | (C) | (D) | (E) | (F) | I | R |
|---|---|---|---|---|---|---|---|---|---|---|---|
| 1 | 1 | 119620-01620 | PIN, M6X10 | 2 | | | | | | | |
| 2 | 1 | 119660-01640 | CASE ASSY, OIL SEAL | 1 | | | | | | | |
| 4 | 2 | 124085-02220 | SEAL, OIL | 1 | | | | | | | |
| 5 | 1 | 26106-060222 | BOLT, M6X 22 PLATED | 10 | | | | | | | |
| 6 | 1 | 119717-01720 | SPACER, OIL SUMP | 1 | | | | | | | |
| 7 | 1 | 119717-01770 | SUMP ASSY, OIL | 1 | | | | | | | |
| 8 | 2 | 105425-01690 | PLUG, 16 | 1 | | | | | | | |
| 10 | 2 | 22190-160002 | WASHER, SEAL 16 | 1 | | | | | | | |
| 11 | 1 | 26106-080122 | BOLT, M8X 12 PLATED | 1 | | | | | | | |
| 12 | 1 | 26106-080302 | BOLT, M8X 30 PLATED | 1 | | | | | | | |
| 13 | 1 | 26106-080452 | BOLT, M8X 45 PLATED | 11 | | | | | | | |
| 14 | 1 | 26106-080502 | BOLT, M8X 50 PLATED | 3 | | | | | | | |

N:Old ←Yes/No→ New. Q:Old ←No/Yes→ New. R:Old ←Yes/Yes→ New. S:Old ←No/No→ New. W:Add. Z:Discontinued. F:Interchangeable by set. K:Q'ty Change

Copyright (C) 2014 YANMAR GLOBAL CS CO., LTD. All RightsReserved.

# Fig.4. CYLINDER HEAD & BONNET



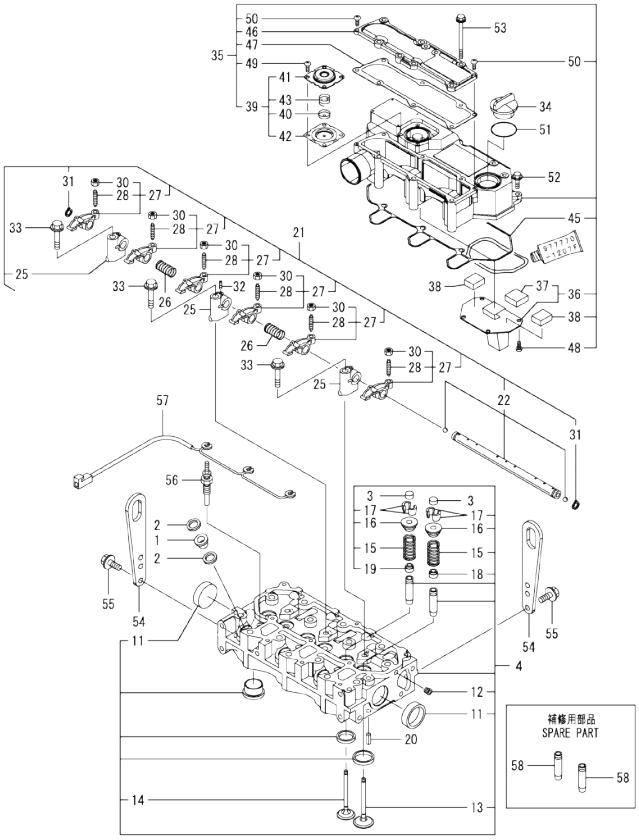


(A)=3TNV80F-SDKTF
(B)=
(C)=
(D)=
(E)=
(F)=

| No. | Lev. | Parts No. | Description | Q'ty (A) | (B) | (C) | (D) | (E) | (F) | I | R |
|---|---|---|---|---|---|---|---|---|---|---|---|
| 1 | 1 | 129901-11450 | PROTECTOR, NOZZLE | 3 | | | | | | | |
| 2 | 1 | 119600-11460 | GASKET, NOZZLE | 6 | | | | | | | |
| 3 | 1 | 105010-11490 | CAP, VALVE | 6 | | | | | | | |
| 4 | 1 | 119E10-11750 | HEAD ASSY, CYLINDER | 1 | | | | | | | |
| 11 | 2 | 119285-11990 | PLUG, 35 | 2 | | | | | | | |
| 12 | 2 | 23876-005000 | PLUG, R005 | 1 | | | | | | | |
| 13 | 2 | 119E10-11100 | VALVE, SUCTION | 3 | | | | | | | |
| 14 | 2 | 119E10-11110 | VALVE, EXHAUST | 3 | | | | | | | |
| 15 | 2 | 119717-11131 | SPRING, VALVE | 6 | | | | | | | |
| 16 | 2 | 129508-11180 | RETAINER, SPRING | 6 | | | | | | | |
| 17 | 2 | 119717-11190 | COTTER | 12 | | | | | | | |
| 18 | 2 | 119717-11340 | SEAL, VALVE STEM | 3 | | | | | | | |
| 19 | 2 | 119717-11350 | SEAL, VALVE STEM | 3 | | | | | | | |
| 20 | 1 | 22351-060012 | PIN, SPRING 6.0X12 | 2 | | | | | | | |
| 21 | 1 | 119717-11200 | SUPPORT ASSY, ARM | 1 | | | | | | | |
| 22 | 2 | 119717-11240 | SHAFT ASSY, ROCKER | 1 | | | | | | | |
| 25 | 2 | 119717-11260 | SUPPORT, ROCKER ARM | 3 | | | | | | | |
| 26 | 2 | 119620-11280 | SPRING | 2 | | | | | | | |
| 27 | 2 | 119717-11650 | ARM, ROCKER | 6 | | | | | | | |
| 28 | 3 | 129150-11230 | SCREW, VALVE ADJUST | 6 | | | | | | | |
| 30 | 3 | 129150-11750 | NUT, M8 | 6 | | | | | | | |
| 31 | 2 | 22242-000120 | RING, 12 | 2 | | | | | | | |
| 32 | 2 | 26979-050162 | SCREW, M5X16 | 1 | | | | | | | |
| 33 | 1 | 26106-080402 | BOLT, M8X 40 PLATED | 3 | | | | | | | |
| 34 | 1 | 124160-01751 | COVER, FILLER | 1 | | | | | | | |
| 35 | 1 | 119717-11381 | BONNET ASSY, HEAD | 1 | | | | | | | |
| 36 | 2 | 119717-03031 | PLATE | 1 | | | | | | | |
| 37 | 3 | 119717-03070 | BAFFLE, BREATHER | 1 | | | | | | | |
| 38 | 2 | 119717-03070 | BAFFLE, BREATHER | 2 | | | | | | | |
| 39 | 2 | 119802-03100 | DIAPHRAGM ASSY | 1 | | | | | | | |
| 40 | 3 | 119802-03110 | PLATE | 1 | | | | | | | |
| 41 | 3 | 119802-03121 | COVER, DIAPHRAGM | 1 | | | | | | | |
| 42 | 3 | 119802-03131 | DIAPHRAGM | 1 | | | | | | | |
| 43 | 3 | 119802-03141 | SPRING, DIAPHRAGM | 1 | | | | | | | |
| 45 | 2 | 119718-11310 | GASKET, BONNET | 1 | | | | | | | |
| 46 | 2 | 119717-11320 | COVER, BONNET | 1 | | | | | | | |
| 47 | 2 | 119717-11331 | GASKET | 1 | | | | | | | |
| 48 | 2 | 22857-500100 | SCREW, 5X10 | 4 | | | | | | | |
| 49 | 2 | 22857-500100 | SCREW, 5X10 | 4 | | | | | | | |
| 50 | 2 | 22857-500160 | SCREW, 5X16 | 2 | | | | | | | |
| 51 | 1 | 24311-000320 | O-RING, 1AP32.0 | 1 | | | | | | | |
| 52 | 1 | 26106-060202 | BOLT, M6X 20 PLATED | 3 | | | | | | | |
| 53 | 1 | 26106-060752 | BOLT, M6X 75 PLATED | 6 | | | | | | | |
| 54 | 1 | 129900-07900 | LIFTER | 2 | | | | | | | |
| 55 | 1 | 26106-080162 | BOLT, M8X 16 PLATED | 4 | | | | | | | |
| 56 | 1 | 119717-77801 | PLUG, GLOW | 3 | | | | | | | |
| 57 | 1 | 119717-77820 | CONNECTOR, GLOW PLUG | 1 | | | | | | | |
| 58 | 1 | 119717-11800 | GUIDE, VALVE | 6 | | | | | | | 1 |

Remarks
(1)Spare parts.

N:Old ←Yes/No→ New. Q:Old ←No/Yes→ New. R:Old ←Yes/Yes→ New. S:Old ←No/No→ New. W:Add. Z:Discontinued. F:Interchangeable by set. K:Q'ty Change

Copyright (C) 2014 YANMAR GLOBAL CS CO., LTD. All RightsReserved.

# Fig.5. EXHAUST MANIFOLD



(A)=3TNV80F-SDKTF
(B)=
(C)=
(D)=
(E)=
(F)=

| No. | Lev. | Parts No. | Description | Q'ty (A) | (B) | (C) | (D) | (E) | (F) | I | R |
|---|---|---|---|---|---|---|---|---|---|---|---|
| 1 | 1 | 119718-13100 | MANIFOLD, EXHAUST | 1 | | | | | | | |
| 2 | 1 | 119717-13110 | GASKET | 1 | | | | | | | |
| 3 | 1 | 119717-13600 | STUD, M8X50 | 2 | | | | | | | |
| 4 | 1 | 119802-13620 | BOLT, M8X50 | 4 | | | | | | | |
| 5 | 1 | 119131-18320 | STUD, M8X22 | 4 | | | | | | | |
| 6 | 1 | 26306-080002 | NUT, M8 | 2 | | | | | | | |
| 7 | 1 | 119515-13200 | GASKET, SILENCER | 1 | | | | | | | |

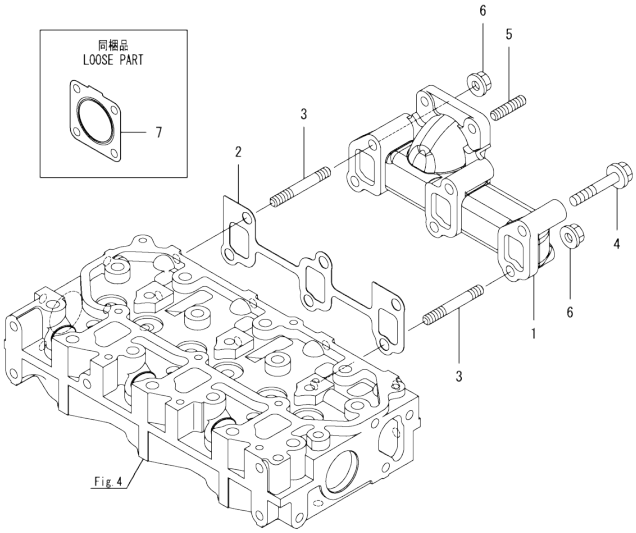


N:Old ←Yes/No→ New. Q:Old ←No/Yes→ New. R:Old ←Yes/Yes→ New. S:Old ←No/No→ New. W:Add. Z:Discontinued. F:Interchangeable by set. K:Q'ty Change

Copyright (C) 2014 YANMAR GLOBAL CS CO., LTD. All RightsReserved.

# Fig.6. CAMSHAFT & DRIVING GEAR



(A)=3TNV80F-SDKTF (D)=
(B)= (E)=
(C)= (F)=

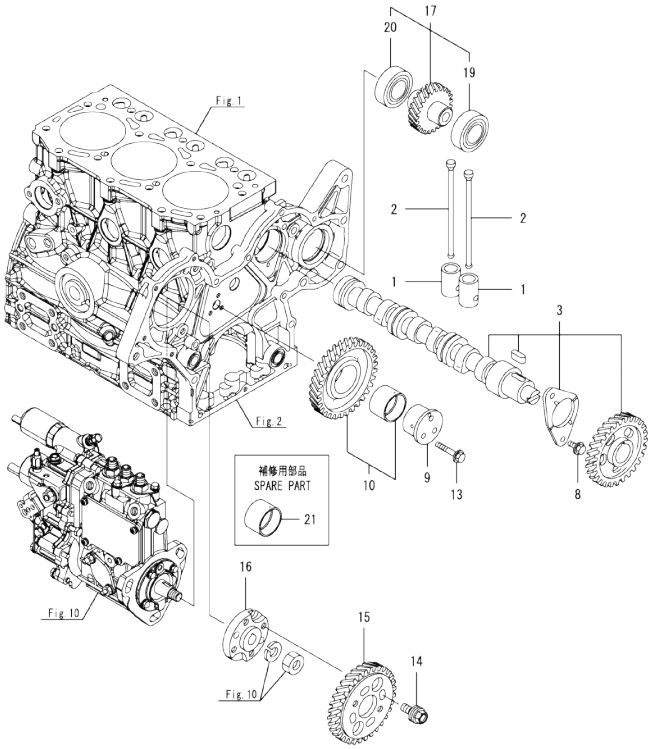


| No. | Lev. | Parts No. | Description | Q'ty (A) | (B) | (C) | (D) | (E) | (F) | I | R |
|---|---|---|---|---|---|---|---|---|---|---|---|
| 1 | 1 | 119620-14200 | TAPPET | 6 | | | | | | | |
| 2 | 1 | 119717-14400 | ROD, PUSH | 6 | | | | | | | |
| 3 | 1 | 119717-14581 | CAMSHAFT ASSY | 1 | | | | | | | |
| 8 | 1 | 26106-060122 | BOLT, M6X 12 PLATED | 2 | | | | | | | |
| 9 | 1 | 119717-25050 | SHAFT, IDLE | 1 | | | | | | | |
| 10 | 1 | 119717-25101 | GEAR ASSY, IDLE | 1 | | | | | | | |
| 13 | 1 | 26106-060352 | BOLT, M6X 35 PLATED | 3 | | | | | | | |
| 14 | 1 | 129150-25301 | BOLT | 4 | | | | | | | |
| 15 | 1 | 119717-25930 | GEAR, PUMP | 1 | | | | | | | |
| 16 | 1 | 119717-51150 | FLANGE | 1 | | | | | | | |
| 17 | 1 | 119717-26000 | GEAR ASSY, PUMP | 1 | | | | | | | |
| 19 | 2 | 129350-26490 | BEARING, BALL 16005 | 1 | | | | | | | |
| 20 | 2 | 24104-060054 | BEARING, BALL 6005UU | 1 | | | | | | | |
| 21 | 1 | 119717-25911 | BUSH, IDLE GEAR | 1 | | | | | | | 1 |

Remarks
(1)Spare parts.

N:Old $\frac{\text{Yes}}{\text{No}}$ New. Q:Old $\frac{\text{No}}{\text{Yes}}$ New. R:Old $\frac{\text{Yes}}{\text{Yes}}$ New. S:Old $\frac{\text{No}}{\text{No}}$ New. W:Add. Z:Discontinued. F:Interchangeable by set. K:Q'ty Change

Copyright (C) 2014 YANMAR GLOBAL CS CO., LTD. All RightsReserved.

# Fig.7. CRANKSHAFT & PISTON



(A)=3TNV80F-SDKTF (D)=
(B)= (E)=
(C)= (F)=

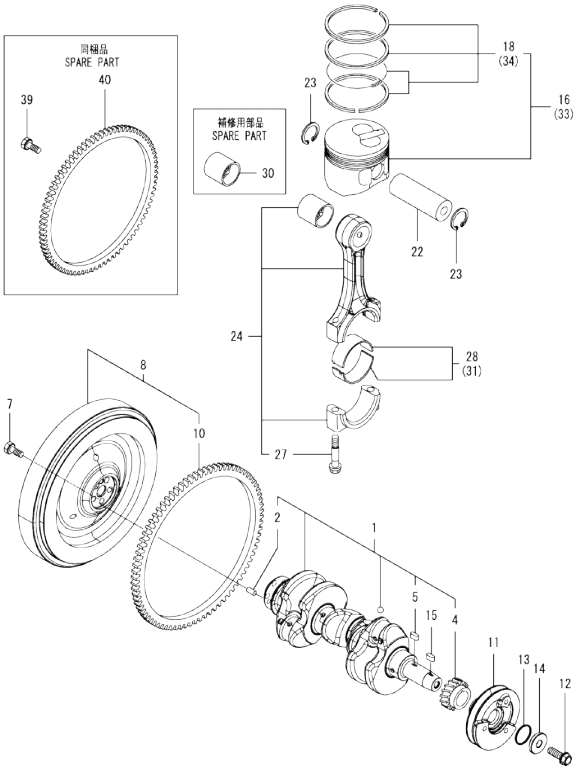


| No. | Lev. | Parts No. | Description | Q'ty (A) | (B) | (C) | (D) | (E) | (F) | I | R |
|---|---|---|---|---|---|---|---|---|---|---|---|
| 1 | 1 | 119E10-21700 | CRANKSHAFT ASSY | 1 | | | | | | | |
| 2 | 2 | 129100-01580 | PIN, 8X16 | 1 | | | | | | | |
| 4 | 2 | 119717-21200 | GEAR, CRANKSHAFT | 1 | | | | | | | |
| 5 | 2 | 22512-040120 | KEY, 4X 12 | 1 | | | | | | | |
| 7 | 1 | 121111-21501 | BOLT, FLYWHEEL | 5 | | | | | | | |
| 8 | 1 | 119E10-21590 | FLYWHEEL ASSY | 1 | | | | | | | |
| 10 | 2 | 119865-21600 | GEAR, RING | 1 | | | | | | | |
| 11 | 1 | 119C10-21650 | V-PULLEY, CRANKSHAFT | 1 | | | | | | | |
| 12 | 1 | 119621-21681 | BOLT, FLANGE 12X1.25 | 1 | | | | | | | |
| 13 | 1 | 119C10-21930 | PACKING, WASHER | 1 | | | | | | | |
| 14 | 1 | 119C10-21940 | WASHER, V-PULLEY | 1 | | | | | | | |
| 15 | 1 | 22512-040120 | KEY, 4X 12 | 1 | | | | | | | |
| 16 | 1 | 119E10-22080 | PISTON ASSY | 3 | | | | | | | |
| 18 | 2 | 119E10-22500 | RING ASSY | 3 | | | | | | | |
| 22 | 1 | 119E10-22300 | PIN, PISTON | 3 | | | | | | | |
| 23 | 1 | 22252-000220 | RING, 22 | 6 | | | | | | | |
| 24 | 1 | 119E10-23000 | ROD ASSY, CONNECTING | 3 | | | | | | | |
| 27 | 2 | 119717-23200 | BOLT, CONNECTING ROD | 6 | | | | | | | |
| 28 | 1 | 119717-23601 | BEARING, CRANK PIN | 3 | | | | | | | |
| 30 | 1 | 119717-23910 | BEARING, PISTON PIN | 3 | | | | | | | 1 |
| 31 | 1 | 119717-23611 | METAL ASSY, 0.25 | 3 | | | | | | | 2 |
| 33 | 1 | 119E10-22900 | PISTON ASSY, 0.25 OS | 3 | | | | | | | 3 |
| 34 | 2 | 119E10-22550 | RING ASSY, 0.25 | 3 | | | | | | | 3 |
| 39 | 1 | 121111-21501 | BOLT, FLYWHEEL | 5 | | | | | | | |
| 40 | 1 | 124060-21600 | GEAR, RING | 1 | | | | | | | |

Remarks
(1)Spare parts.
(2)Under-sized(U.S.=0.25) parts.
(3)Over-sized(O.S.=0.25) parts.

N:Old $\frac{\text{Yes}}{\text{No}}$ New. Q:Old $\frac{\text{No}}{\text{Yes}}$ New. R:Old $\frac{\text{Yes}}{\text{Yes}}$ New. S:Old $\frac{\text{No}}{\text{No}}$ New. W:Add. Z:Discontinued. F:Interchangeable by set. K:Q'ty Change

Copyright (C) 2014 YANMAR GLOBAL CS CO., LTD. All RightsReserved.

# Fig.8. LUB. OIL SYSTEM

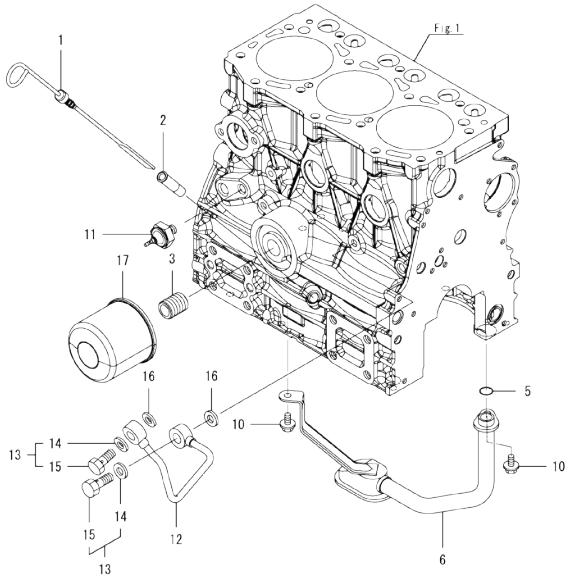




(A)=3TNV80F-SDKTF (D)=
(B)= (E)=
(C)= (F)=

| No. | Lev. | Parts No. | Description | Q'ty (A) | (B) | (C) | (D) | (E) | (F) | I | R |
|---|---|---|---|---|---|---|---|---|---|---|---|
| 1 | 1 | 119717-34801 | DIPSTICK, OIL | 1 | | | | | | | |
| 2 | 1 | 121520-34810 | GUIDE, DIPSTICK | 1 | | | | | | | |
| 3 | 1 | 119717-35140 | BOLT | 1 | | | | | | | |
| 5 | 1 | 119717-32060 | O-RING, P15.0 | 1 | | | | | | | |
| 6 | 1 | 119717-35080 | PIPE ASSY, OIL INLET | 1 | | | | | | | |
| 10 | 1 | 26106-060102 | BOLT, M6X 10 PLATED | 2 | | | | | | | |
| 11 | 1 | 114250-39450 | SWITCH, 0.5KG | 1 | | | | | | | |
| 12 | 1 | 119717-39210 | PIPE, OIL | 1 | | | | | | | |
| 13 | 1 | 129005-59830 | BOLT ASSY, JOINT M8 | 2 | | | | | | | |
| 14 | 2 | 22190-080002 | WASHER, SEAL 8 | 2 | | | | | | | |
| 15 | 2 | 23857-030000 | BOLT, JOINT 3 | 2 | | | | | | | |
| 16 | 1 | 22190-080002 | WASHER, SEAL 8 | 2 | | | | | | | |
| 17 | 1 | 119305-35151 | FILTER ASSY, D68XL65 | 1 | | | | | | | 1 |

Remarks
(1)Spare parts.

N:Old ←Yes/No→ New. Q:Old ←No/Yes→ New, R:Old ←Yes/Yes→ New. S:Old ←No/No→ New. W:Add. Z:Discontinued. F:Interchangeable by set. K:Q'ty Change

Copyright (C) 2014 YANMAR GLOBAL CS CO., LTD. All RightsReserved.

# Fig.9. COOLING WATER SYSTEM



(A)=3TNV80F-SDKTF
(B)=
(C)=
(D)=
(E)=
(F)=

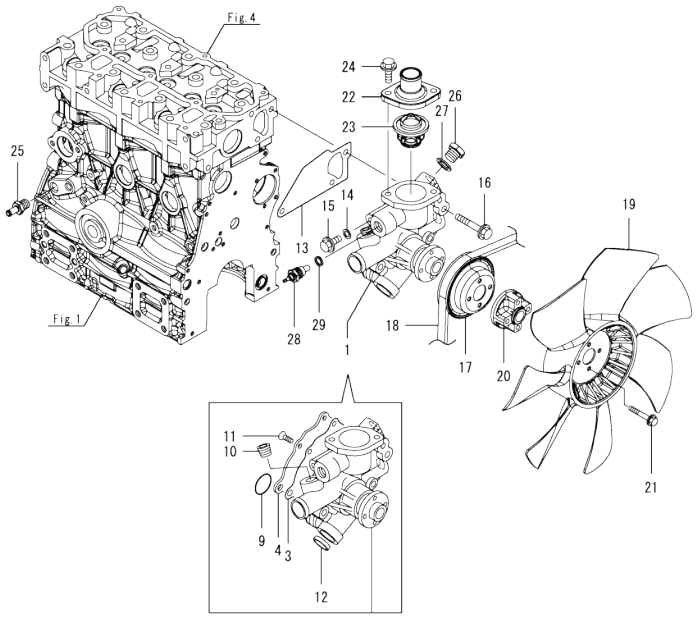


| No. | Lev. | Parts No. | Description | Q'ty (A) | (B) | (C) | (D) | (E) | (F) | I | R |
|---|---|---|---|---|---|---|---|---|---|---|---|
| 1 | 1 | 119E10-42000 | PUMP ASSY, WATER | 1 | | | | | | | |
| 3 | 2 | 119717-42031 | GASKET | 1 | | | | | | | |
| 4 | 2 | 119717-42041 | COVER | 1 | | | | | | | |
| 9 | 2 | 119C10-42320 | O-RING, 2028 | 1 | | | | | | | |
| 10 | 2 | 129916-49740 | PLUG, R03 | 1 | | | | | | | |
| 11 | 2 | 26577-060122 | SCREW, M6X12 | 4 | | | | | | | |
| 12 | 2 | 27241-250000 | PLUG, 25 | 1 | | | | | | | |
| 13 | 1 | 119717-42020 | GASKET, WATER PUMP | 1 | | | | | | | |
| 14 | 1 | 23414-080000 | GASKET, 8X1.0 | 1 | | | | | | | |
| 15 | 1 | 26106-080122 | BOLT, M8X 12 PLATED | 1 | | | | | | | |
| 16 | 1 | 26106-080502 | BOLT, M8X 50 PLATED | 3 | | | | | | | |
| 17 | 1 | 119717-42350 | V-PULLEY, D=100 | 1 | | | | | | | |
| 18 | 1 | 25132-003700 | V-BELT, A37 | 1 | | | | | | | |
| 19 | 1 | 119717-44740 | FAN, COOLING D335X7 | 1 | | | | | | | |
| 20 | 1 | 171353-44760 | SPACER, FAN | 1 | | | | | | | |
| 21 | 1 | 26106-060402 | BOLT, M6X 40 PLATED | 4 | | | | | | | |
| 22 | 1 | 129350-49530 | COVER, THERMOSTAT | 1 | | | | | | | |
| 23 | 1 | 119717-49800 | THERMOSTAT, 71 | 1 | | | | | | | |
| 24 | 1 | 26106-080202 | BOLT, M8X 20 PLATED | 2 | | | | | | | |
| 25 | 1 | 121550-49111 | JOINT, PT1/4 | 1 | | | | | | | |
| 26 | 1 | 121450-42450 | PLUG, M16 | 1 | | | | | | | |
| 27 | 1 | 124465-44950 | GASKET, 16 | 1 | | | | | | | |
| 28 | 1 | 124250-49351 | SENSOR | 1 | | | | | | | |
| 29 | 1 | 129150-49360 | GASKET | 1 | | | | | | | |

N:Old ←Yes/No→ New. Q:Old ←No/Yes→ New. R:Old ←Yes/Yes→ New. S:Old ←No/No→ New. W:Add. Z:Discontinued. F:Interchangeable by set. K:Q'ty Change

Copyright (C) 2014 YANMAR GLOBAL CS CO., LTD. All RightsReserved.

# Fig.10. FUEL INJECTION PUMP



(A)=3TNV80F-SDKTF
(B)=
(C)=
(D)=
(E)=
(F)=

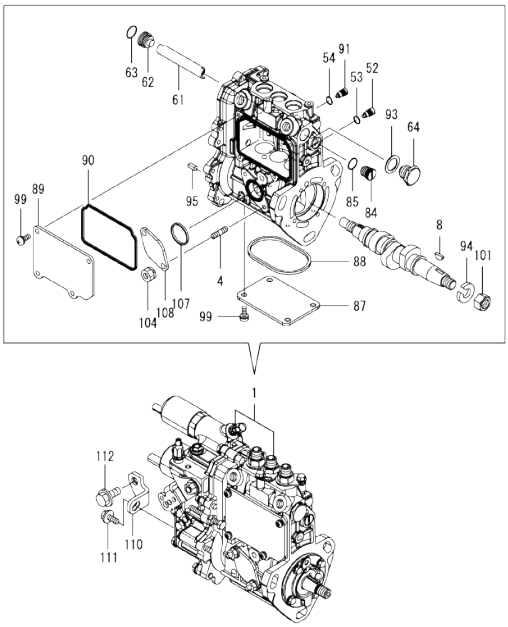


| No. | Lev. | Parts No. | Description | Q'ty (A) | (B) | (C) | (D) | (E) | (F) | I | R |
|---|---|---|---|---|---|---|---|---|---|---|---|
| 1 | 1 | 719E10-51340 | FIE ASSY | 1 | | | | | | | 1 |
| 4 | 2 | 129155-51020 | STUD | 2 | | | | | | | |
| 8 | 2 | 122710-51090 | KEY, FEATHER | 1 | | | | | | | |
| 52 | 2 | 158600-51270 | STOPPER, TAPPET | 3 | | | | | | | |
| 53 | 2 | 129155-51280 | O-RING, S6 | 3 | | | | | | | |
| 54 | 2 | 129155-51280 | O-RING, S6 | 1 | | | | | | | |
| 61 | 2 | 129155-51400 | PROTECTOR | 1 | | | | | | | |
| 62 | 2 | 158600-51410 | PLUG, DEFLIFTER M12 | 1 | | | | | | | |
| 63 | 2 | 119717-51420 | O-RING | 1 | | | | | | | |
| 64 | 2 | 158600-51420 | PLUG, DEFLIFTER M16 | 1 | | | | | | | |
| 84 | 2 | 158600-51570 | PLUG, RACK | 1 | | | | | | | |
| 85 | 2 | 129155-51580 | O-RING | 1 | | | | | | | |
| 87 | 2 | 129155-51701 | COVER, PUMP BOTTOM | 1 | | | | | | | |
| 88 | 2 | 119717-51711 | GASKET, PUMP | 1 | | | | | | | |
| 89 | 2 | 119717-51750 | COVER, BODY SIDE | 1 | | | | | | | |
| 90 | 2 | 119717-51761 | GASKET, PUMP COVER | 1 | | | | | | | |
| 91 | 2 | 158600-51790 | STOPPER, RACK | 1 | | | | | | | |
| 93 | 2 | 22190-160002 | WASHER, SEAL 16 | 1 | | | | | | | |
| 94 | 2 | 22217-120000 | WASHER, SPRING 12 | 1 | | | | | | | |
| 95 | 2 | 22351-050010 | PIN, SPRING 5.0X10 | 2 | | | | | | | |
| 99 | 2 | 26022-050122 | SCREW, M5X12 | 8 | | | | | | | |
| 101 | 2 | 26716-120002 | NUT, M12 | 1 | | | | | | | |
| 104 | 2 | 119717-51860 | NUT, M6 | 2 | | | | | | | |
| 107 | 2 | 129155-52051 | GASKET, PUMP COVER | 1 | | | | | | | |
| 108 | 2 | 129100-52200 | COVER, FEED PUMP | 1 | | | | | | | |
| 110 | 1 | 119C10-51250 | SUPPORT, FUEL PUMP | 1 | | | | | | | |
| 110-1 | 1 | 119E10-51250 | SUPPORT | 1 | | | | | | | N |
| | (A=E16526) | | | | | | | | | | |
| 111 | 1 | 26106-060142 | BOLT, M6X 14 PLATED | 1 | | | | | | | |
| 111-1 | 1 | 26106-060162 | BOLT, M6X 16 PLATED | 1 | | | | | | | N |
| | (A=E16526) | | | | | | | | | | |
| 112 | 1 | 26106-080142 | BOLT, M8X 14 PLATED | 1 | | | | | | | |
| 112-1 | 1 | 26106-080162 | BOLT, M8X 16 PLATED | 1 | | | | | | | N |
| | (A=E16526) | | | | | | | | | | |

Remarks
(1)Governor(Fig.11) is incorporated in this Fuel Injection Pump(No.1).

N:Old ◄Yes/No► New. Q:Old ◄No/Yes► New. R:Old ◄Yes/Yes► New. S:Old ◄No/No► New. W:Add. Z:Discontinued. F:Interchangeable by set. K:Q'ty Change

Copyright (C) 2014 YANMAR GLOBAL CS CO., LTD. All RightsReserved.

# Fig.11. GOVERNOR

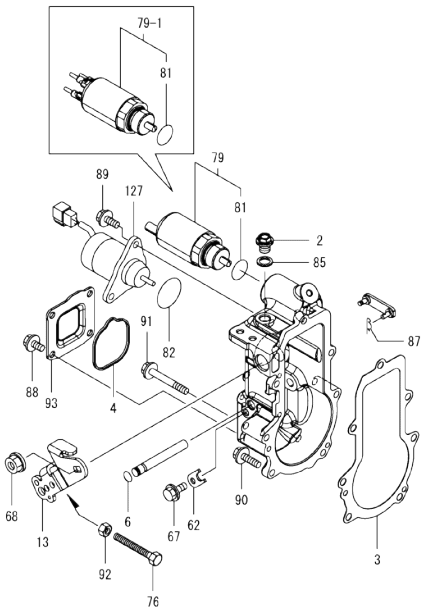




(A)=3TNV80F-SDKTF (D)=
(B)= (E)=
(C)= (F)=

| No. | Lev. | Parts No. | Description | Q'ty (A) | (B) | (C) | (D) | (E) | (F) | I | R |
|---|---|---|---|---|---|---|---|---|---|---|---|
| 2 | 2 | 119717-51930 | PLUG, M10 | 1 | | | | | | | |
| 3 | 2 | 119717-61050 | GASKET, CASE | 1 | | | | | | | |
| 4 | 2 | 119717-61070 | GASKET, COVER | 1 | | | | | | | |
| 6 | 2 | 129155-51280 | O-RING, S6 | 1 | | | | | | | |
| 13 | 2 | 119515-61440 | LEVER, CONTROL | 1 | | | | | | | |
| 62 | 2 | 119660-61901 | STOPPER, SHAFT | 1 | | | | | | | |
| 67 | 2 | 26106-060102 | BOLT, M6X 10 PLATED | 1 | | | | | | | |
| 68 | 2 | 26366-080002 | NUT, M8 | 1 | | | | | | | |
| 76 | 2 | 129155-61460 | BOLT, IDLE LIMIT | 1 | | | | | | | |
| 79 | 2 | 119C00-61900 | SOLENOID, CONTROL | 1 | | | | | | | |
| 79-1 | 2 | 119C00-61901 | SOLENOID, POWER CONT | 1 | | | | | | | R |
| | (A=*2019.09) | | | | | | | | | | |
| 81 | 3 | 24357-240200 | PACKING, 24020 | 1 | | | | | | | |
| 82 | 2 | 158552-61900 | O-RING | 1 | | | | | | | |
| 85 | 2 | 22190-100002 | WASHER, SEAL 10 | 1 | | | | | | | |
| 87 | 2 | 22372-040000 | PIN, SNAP 4 | 1 | | | | | | | |
| 88 | 2 | 26106-060102 | BOLT, M6X 10 PLATED | 4 | | | | | | | |
| 89 | 2 | 26106-060142 | BOLT, M6X 14 PLATED | 2 | | | | | | | |
| 90 | 2 | 26106-060202 | BOLT, M6X 20 PLATED | 4 | | | | | | | |
| 91 | 2 | 26106-060452 | BOLT, M6X 45 PLATED | 3 | | | | | | | |
| 92 | 2 | 26756-060002 | NUT, LOCK M6 | 1 | | | | | | | |
| 93 | 2 | 119717-61060 | COVER, GOVERNOR CASE | 1 | | | | | | | |
| 127 | 2 | 119233-77932 | SOLENOID, STOP | 1 | | | | | | | |

Remarks
* This figure(Governor) is incorporated in the Fuel Injection Pump(Fig.10).

N:Old ◄Yes/No► New. Q:Old ◄No/Yes► New. R:Old ◄Yes/Yes► New. S:Old ◄No/No► New. W:Add. Z:Discontinued. F:Interchangeable by set. K:Q'ty Change

Copyright (C) 2014 YANMAR GLOBAL CS CO., LTD. All RightsReserved.

# Fig.12. FUEL INJECTION VALVE



(A)=3TNV80F-SDKTF
(B)=
(C)=
(D)=
(E)=
(F)=

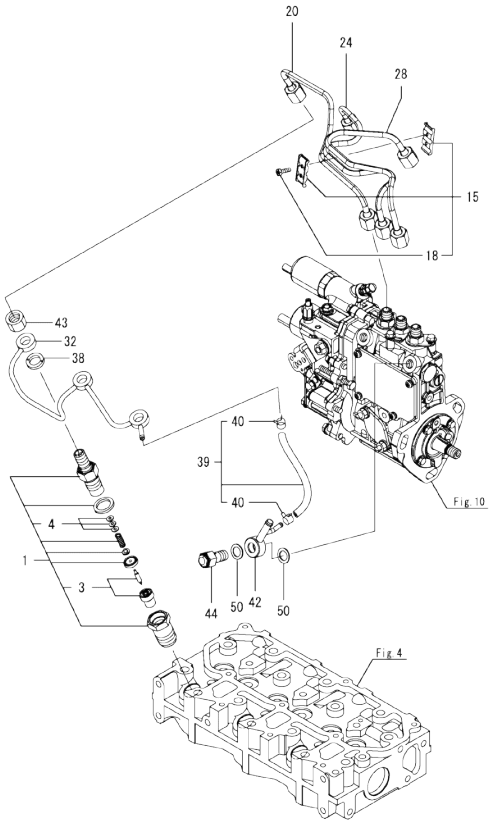


| No. | Lev. | Parts No. | Description | Q'ty (A) | (B) | (C) | (D) | (E) | (F) | I | R |
|---|---|---|---|---|---|---|---|---|---|---|---|
| 1 | 1 | 119C10-53000 | NOZZLE ASSY, F.I. | 3 | | | | | | | |
| 3 | 2 | 119C10-53010 | NOZZLE ASSY | 3 | | | | | | | |
| 4 | 2 | 129901-53800 | SHIM SET, ADJUSTING | 3 | | | | | | | 1 |
| 15 | 1 | 129150-59120 | RETAINER, PIPE | 1 | | | | | | | |
| 18 | 2 | 129150-59131 | BOLT, M4X14 | 2 | | | | | | | |
| 20 | 1 | 119E10-59810 | PIPE ASSY,INJ.NO1 | 1 | | | | | | | |
| 24 | 1 | 119E10-59820 | PIPE ASSY,INJ.NO2 | 1 | | | | | | | |
| 28 | 1 | 119E10-59830 | PIPE ASSY,INJ.NO3 | 1 | | | | | | | |
| 32 | 1 | 119717-59510 | PIPE ASSY, RETURN | 1 | | | | | | | |
| 38 | 1 | 129901-59560 | GASKET | 3 | | | | | | | |
| 39 | 1 | 119540-59570 | PIPE ASSY, RETURN | 1 | | | | | | | |
| 40 | 2 | 124066-59100 | CLIP, HOSE 8 | 2 | | | | | | | |
| 42 | 1 | 119840-59570 | JOINT | 1 | | | | | | | |
| 43 | 1 | 119620-59700 | NUT, NOZZLE | 3 | | | | | | | |
| 44 | 1 | 119813-59950 | VALVE ASSY, CHECK | 1 | | | | | | | |
| 50 | 1 | 22190-120002 | WASHER, SEAL 12 | 2 | | | | | | | |

Remarks
(1)Spare parts.

N:Old ◄Yes/No► New. Q:Old ◄No/Yes► New. R:Old ◄Yes/Yes► New. S:Old ◄No/No► New. W:Add. Z:Discontinued. F:Interchangeable by set. K:Q'ty Change

Copyright (C) 2014 YANMAR GLOBAL CS CO., LTD. All RightsReserved.

# Fig.13. FUEL FILTER

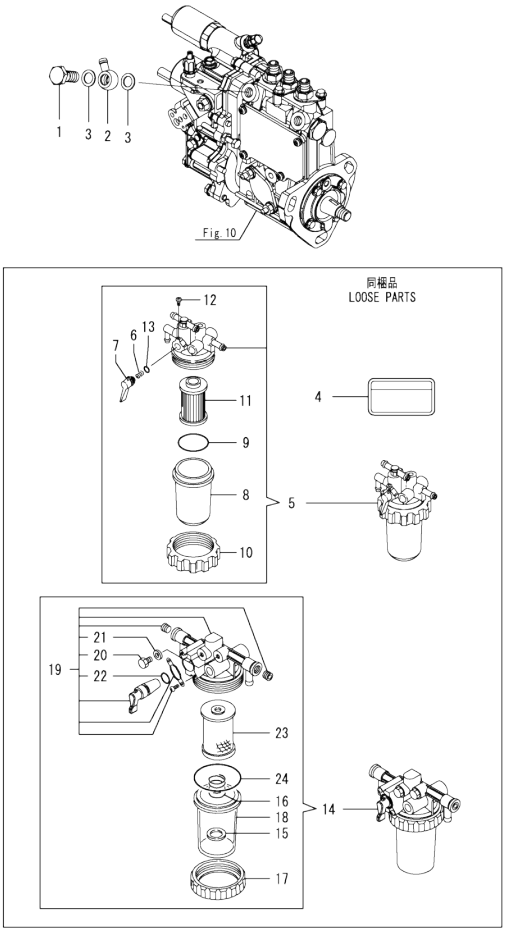




(A)=3TNV80F-SDKTF (D)=
(B)= (E)=
(C)= (F)=

| No. | Lev. | Parts No. | Description | Q'ty (A) | (B) | (C) | (D) | (E) | (F) | I | R |
|---|---|---|---|---|---|---|---|---|---|---|---|
| 1 | 1 | 103854-39140 | BOLT, PIPE JOINT | 1 | | | | | | | |
| 2 | 1 | 101304-59020 | JOINT, PIPE 12 | 1 | | | | | | | |
| 3 | 1 | 22190-120002 | WASHER, SEAL 12 | 2 | | | | | | | |
| 4 | 1 | 114110-07761 | LABEL, FUEL OIL CAUT | 1 | | | | | | | |
| 5 | 1 | 119740-55601 | STRAINER ASSY | 1 | | | | | | | |
| 6 | 2 | 104200-55330 | SPRING, VALVE | 1 | | | | | | | |
| 7 | 2 | 119810-55340 | LEVER | 1 | | | | | | | |
| 8 | 2 | 121254-55510 | COVER | 1 | | | | | | | |
| 9 | 2 | 102103-55520 | O-RING | 1 | | | | | | | |
| 10 | 2 | 110250-55610 | RING, RETAINING | 1 | | | | | | | |
| 11 | 2 | 119810-55650 | ELEMENT | 1 | | | | | | | |
| 12 | 2 | 104200-55750 | SCREW, M4 | 1 | | | | | | | |
| 13 | 2 | 24311-240100 | O-RING, 1AP10A | 1 | | | | | | | |
| 14 | 1 | 129335-55750 | SEPARATOR ASSY,WATER | 1 | | | | | | | |
| 15 | 2 | 129053-55640 | FLOAT | 1 | | | | | | | |
| 16 | 2 | 129053-55650 | SPRING, SCREEN | 1 | | | | | | | |
| 17 | 2 | 119833-55660 | RING, RETAINING | 1 | | | | | | | |
| 18 | 2 | 129335-55740 | CUP | 1 | | | | | | | |
| 19 | 2 | 129335-55770 | BODY ASSY | 1 | | | | | | | |
| 20 | 3 | 129242-55750 | VALVE, AIR VENT | 1 | | | | | | | |
| 21 | 3 | 129242-55760 | GASKET | 1 | | | | | | | |
| 22 | 3 | 24311-000110 | O-RING, 1AP11.0 | 1 | | | | | | | |
| 23 | 2 | 129335-55780 | ELEMENT ASSY | 1 | | | | | | | |
| 24 | 2 | 24311-000440 | O-RING, 1AP44.0 | 1 | | | | | | | |

N:Old ◄Yes/No► New. Q:Old ◄No/Yes► New, R:Old ◄Yes/Yes► New, S:Old ◄No/No► New. W:Add. Z:Discontinued. F:Interchangeable by set. K:Q'ty Change

Copyright (C) 2014 YANMAR GLOBAL CS CO., LTD. All RightsReserved.

# Fig.14. STARTING MOTOR

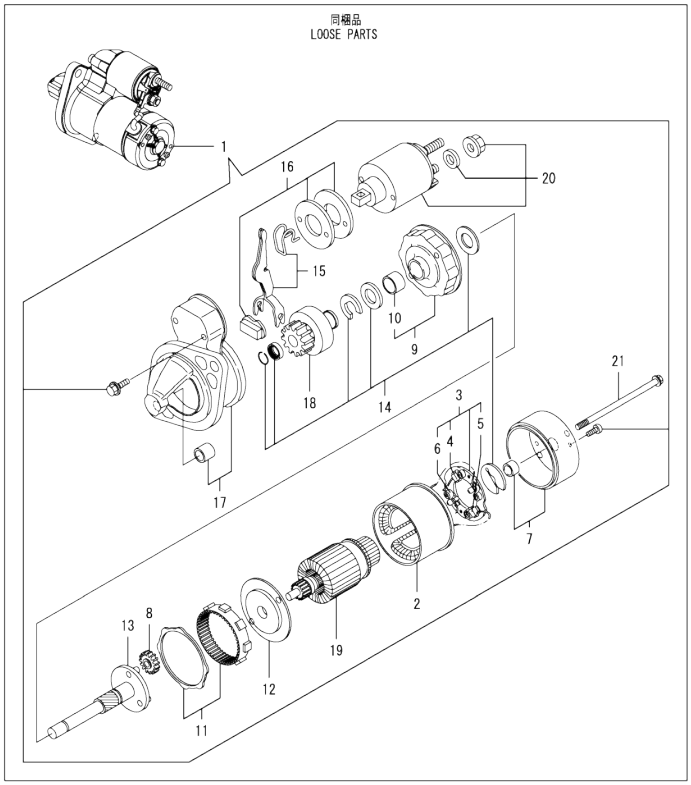




(A)=3TNV80F-SDKTF (D)=
(B)= (E)=
(C)= (F)=

| No. | Lev. | Parts No. | Description | Q'ty (A) | (B) | (C) | (D) | (E) | (F) | I | R |
|---|---|---|---|---|---|---|---|---|---|---|---|
| 1 | 1 | 119125-77010 | STARTER ASSY, 1.2KW | 1 | | | | | | | |
| 2 | 2 | 129698-77110 | YOKE ASSY | 1 | | | | | | | |
| 3 | 2 | 129698-77120 | HOLDER ASSY, BRUSH | 1 | | | | | | | |
| 4 | 3 | 129698-77130 | BRUSH | 2 | | | | | | | |
| 5 | 3 | 129698-77140 | BRUSH SET | 1 | | | | | | | |
| 6 | 3 | 129698-77150 | SPRING, BRUSH | 4 | | | | | | | |
| 7 | 2 | 129698-77161 | COVER ASSY | 1 | | | | | | | |
| 8 | 2 | 119125-77170 | GEAR | 3 | | | | | | | |
| 9 | 2 | 129698-77180 | BRACKET | 1 | | | | | | | |
| 10 | 3 | 129698-77190 | BRACKET | 1 | | | | | | | |
| 11 | 2 | 119125-77200 | GEAR, INTERNAL | 1 | | | | | | | |
| 12 | 2 | 119125-77210 | BRACKET | 1 | | | | | | | |
| 13 | 2 | 119125-77230 | SHAFT, PINION | 1 | | | | | | | |
| 14 | 2 | 129698-77250 | WASHER SET | 1 | | | | | | | |
| 15 | 2 | 119125-77270 | LEVER SET, SHIFT | 1 | | | | | | | |
| 16 | 2 | 119125-77280 | COVER ASSY | 1 | | | | | | | |
| 17 | 2 | 119125-77520 | CASE ASSY, GEAR | 1 | | | | | | | |
| 18 | 2 | 119125-77660 | PINION ASSY | 1 | | | | | | | |
| 19 | 2 | 119125-77710 | ARMATURE ASSY | 1 | | | | | | | |
| 20 | 2 | 119125-77760 | SWITCH ASSY | 1 | | | | | | | |
| 21 | 2 | 124195-77770 | BOLT, THROUGH | 2 | | | | | | | |

N:Old ←Yes/No→ New. Q:Old ←No/Yes→ New. R:Old ←Yes/Yes→ New. S:Old ←No/No→ New. W:Add. Z:Discontinued. F:Interchangeable by set. K:Q'ty Change

Copyright (C) 2014 YANMAR GLOBAL CS CO., LTD. All RightsReserved.

# Fig.15. GENERATOR



(A)=3TNV80F-SDKTF
(B)=
(C)=
(D)=
(E)=
(F)=

| No. | Lev. | Parts No. | Description | Q'ty (A) | (B) | (C) | (D) | (E) | (F) | I | R |
|---|---|---|---|---|---|---|---|---|---|---|---|
| 1 | 1 | 129423-77200 | GENERATOR, 12V-40A | 1 | | | | | | | |
| 2 | 2 | X9490561001 | NUT | 1 | | | | | | | |
| 3 | 2 | 119620-77380 | ROTOR ASSY | 1 | | | | | | | |
| 4 | 3 | 123501-79240 | BEARING, BALL | 1 | | | | | | | |
| 5 | 3 | 119620-79250 | COVER | 1 | | | | | | | |
| 6 | 2 | 119620-77421 | FRAME ASSY, DRIVE | 1 | | | | | | | |
| 7 | 3 | 119620-79200 | BEARING, BALL | 1 | | | | | | | |
| 8 | 3 | 119620-79210 | PLATE, RETAINER | 1 | | | | | | | |
| 9 | 3 | 119620-79220 | SCREW | 4 | | | | | | | |
| 10 | 3 | 119620-79230 | STUD | 2 | | | | | | | |
| 11 | 2 | 119620-77440 | FRAME ASSY | 1 | | | | | | | |
| 12 | 2 | 119620-77461 | PULLEY | 1 | | | | | | | |
| 13 | 2 | 119620-77471 | NUT | 1 | | | | | | | |
| 14 | 2 | 119620-77490 | COLLAR | 1 | | | | | | | |
| 15 | 2 | 129423-77710 | REGULATOR ASSY | 1 | | | | | | | |
| 16 | 2 | 119620-79260 | HOLDER | 1 | | | | | | | |
| 17 | 2 | 129052-79270 | HOLDER, BRUSH | 1 | | | | | | | |
| 18 | 3 | 119620-77480 | BRUSH ASSY | 2 | | | | | | | |
| 19 | 3 | 119620-79280 | SPRING | 2 | | | | | | | |
| 20 | 2 | 119620-79290 | SCREW | 6 | | | | | | | |
| 21 | 2 | 119620-79300 | SCREW | 1 | | | | | | | |
| 22 | 2 | 129240-79300 | COVER | 1 | | | | | | | |
| 23 | 2 | 119620-79310 | BOLT | 3 | | | | | | | |
| 24 | 2 | 119620-79320 | SCREW | 2 | | | | | | | |
| 25 | 2 | 119620-79330 | BOLT | 2 | | | | | | | |
| 26 | 2 | 119620-79340 | BUSH, INSULATION | 1 | | | | | | | |
| 27 | 2 | 119620-79350 | NUT | 2 | | | | | | | |
| 28 | 2 | 119620-79360 | WASHER, THRUST | 1 | | | | | | | |
| 29 | 1 | 26106-100452 | BOLT, M10X 45 PLATED | 1 | | | | | | | |
| 30 | 1 | 119515-77330 | ADJUSTER | 1 | | | | | | | |
| 31 | 1 | 124732-77340 | SPACER | 1 | | | | | | | |
| 32 | 1 | 129972-77341 | BOLT, ADJUSTER L=50 | 1 | | | | | | | |
| 33 | 1 | 26106-080202 | BOLT, M8X 20 PLATED | 1 | | | | | | | |
| 34 | 1 | 119C10-77600 | DRIVER | 1 | | | | | | | |

N:Old ←Yes/No→ New. Q:Old ←No/Yes→ New. R:Old ←Yes/Yes→ New. S:Old ←No/No→ New. W:Add. Z:Discontinued. F:Interchangeable by set. K:Q'ty Change

Copyright (C) 2014 YANMAR GLOBAL CS CO., LTD. All RightsReserved.

# Fig.16. GASKET SET



(A)=3TNV80F-SDKTF
(B)=
(C)=
(D)=
(E)=
(F)=

| No. | Lev. | Parts No. | Description | Q'ty (A) | (B) | (C) | (D) | (E) | (F) | I | R |
|---|---|---|---|---|---|---|---|---|---|---|---|
| 1 | 1 | 719E21-92601 | GASKET KIT | 1 | | | | | | | 1 |
| 2 | 2 | 119E10-01330 | GASKET SET, HEAD | 1 | | | | | | | |
| 3 | 2 | 119718-11310 | GASKET, BONNET | 1 | | | | | | | |
| 4 | 2 | 119717-11331 | GASKET | 1 | | | | | | | |
| 5 | 2 | 119717-11340 | SEAL, VALVE STEM | 3 | | | | | | | |
| 6 | 2 | 119717-11350 | SEAL, VALVE STEM | 3 | | | | | | | |
| 7 | 2 | 129901-11450 | PROTECTOR, NOZZLE | 3 | | | | | | | |
| 8 | 2 | 119600-11460 | GASKET, NOZZLE | 6 | | | | | | | |
| 9 | 2 | 119717-13110 | GASKET | 1 | | | | | | | |
| 10 | 2 | 119515-13200 | GASKET, SILENCER | 1 | | | | | | | |
| 11 | 2 | 119C10-21930 | PACKING, WASHER | 1 | | | | | | | |
| 12 | 2 | 119624-32040 | O-RING, P12.0 | 1 | | | | | | | |
| 13 | 2 | 119717-32050 | O-RING, P17.0 | 3 | | | | | | | |
| 14 | 2 | 119717-32060 | O-RING, P15.0 | 1 | | | | | | | |
| 15 | 2 | 119717-42020 | GASKET, WATER PUMP | 1 | | | | | | | |
| 16 | 2 | 124465-44950 | GASKET, 16 | 1 | | | | | | | |
| 17 | 2 | 129150-49360 | GASKET | 1 | | | | | | | |
| 18 | 2 | 121850-51960 | O-RING | 1 | | | | | | | |
| 19 | 2 | 129901-59560 | GASKET | 3 | | | | | | | |
| 20 | 2 | 22190-080002 | WASHER, SEAL 8 | 4 | | | | | | | |
| 21 | 2 | 22190-120002 | WASHER, SEAL 12 | 4 | | | | | | | |
| 22 | 2 | 22190-160002 | WASHER, SEAL 16 | 1 | | | | | | | |
| 23 | 2 | 23414-080000 | GASKET, 8X1.0 | 1 | | | | | | | |
| 24 | 2 | 24311-000320 | O-RING, 1AP32.0 | 2 | | | | | | | |
| 25 | 1 | 129400-92420 | HONE | 1 | | | | | | | 1 |
| 26 | 1 | 977770-1207F | GASKET.LIQUID | 1 | | | | | | | 1 |

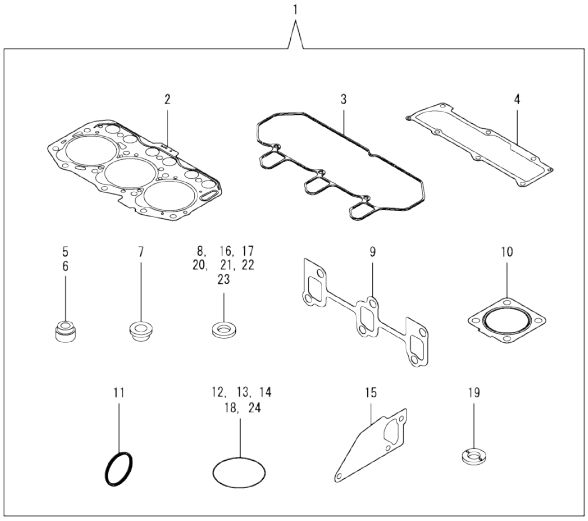


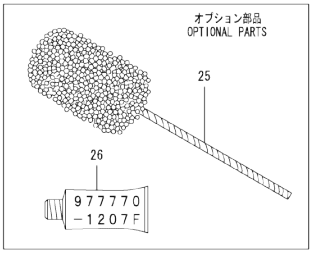


Remarks
(1)Optional parts.

N:Old ←Yes/No→ New. Q:Old ←No/Yes→ New. R:Old ←Yes/Yes→ New. S:Old ←No/No→ New. W:Add. Z:Discontinued. F:Interchangeable by set. K:Q'ty Change

Copyright (C) 2014 YANMAR GLOBAL CS CO., LTD. All RightsReserved.

# Parts No. Index

| Parts No. | Fig. No. | Ref. No. |
|---|---|---|
| 101304-59020 | 13 | 2 |
| 102103-55520 | 13 | 9 |
| 103854-39140 | 13 | 1 |
| 104200-55330 | 13 | 6 |
| 104200-55750 | 13 | 12 |
| 105010-11490 | 4 | 3 |
| 105311-01090 | 1 | 4 |
| 105425-01690 | 3 | 8 |
| 110250-55610 | 13 | 10 |
| 114110-07761 | 13 | 4 |
| 114250-39450 | 8 | 11 |
| 119125-77010 | 14 | 1 |
| 119125-77170 | 14 | 8 |
| 119125-77200 | 14 | 11 |
| 119125-77210 | 14 | 12 |
| 119125-77230 | 14 | 13 |
| 119125-77270 | 14 | 15 |
| 119125-77280 | 14 | 16 |
| 119125-77520 | 14 | 17 |
| 119125-77660 | 14 | 18 |
| 119125-77710 | 14 | 19 |
| 119125-77760 | 14 | 20 |
| 119131-18320 | 5 | 5 |
| 119233-77932 | 11 | 127 |
| 119285-01990 | 1 | 6 |
| 119285-11990 | 4 | 11 |
| 119305-35151 | 8 | 17 |
| 119515-13200 | 5 | 7 |
| | 16 | 10 |
| 119515-61440 | 11 | 13 |
| 119515-77330 | 15 | 30 |
| 119540-59570 | 12 | 39 |
| 119600-11460 | 4 | 2 |
| | 16 | 8 |
| 119620-01620 | 3 | 1 |
| 119620-02020 | 1 | 7 |
| 119620-11280 | 4 | 26 |
| 119620-14200 | 6 | 1 |
| 119620-59700 | 12 | 43 |
| 119620-77380 | 15 | 3 |
| 119620-77421 | 15 | 6 |
| 119620-77440 | 15 | 11 |
| 119620-77461 | 15 | 12 |
| 119620-77471 | 15 | 13 |
| 119620-77480 | 15 | 18 |
| 119620-77490 | 15 | 14 |
| 119620-79200 | 15 | 7 |
| 119620-79210 | 15 | 8 |
| 119620-79220 | 15 | 9 |
| 119620-79230 | 15 | 10 |

| Parts No. | Fig. No. | Ref. No. |
|---|---|---|
| 119620-79250 | 15 | 5 |
| 119620-79260 | 15 | 16 |
| 119620-79280 | 15 | 19 |
| 119620-79290 | 15 | 20 |
| 119620-79300 | 15 | 21 |
| 119620-79310 | 15 | 23 |
| 119620-79320 | 15 | 24 |
| 119620-79330 | 15 | 25 |
| 119620-79340 | 15 | 26 |
| 119620-79350 | 15 | 27 |
| 119620-79360 | 15 | 28 |
| 119621-21681 | 7 | 12 |
| 119623-01250 | 1 | 5 |
| 119624-32040 | 2 | 19 |
| | 16 | 12 |
| 119660-01640 | 3 | 2 |
| 119660-01911 | 2 | 18 |
| 119660-61901 | 11 | 62 |
| 119717-01570 | 2 | 2 |
| 119717-01720 | 3 | 6 |
| 119717-01750 | 2 | 17 |
| 119717-01770 | 3 | 7 |
| 119717-01800 | 2 | 7 |
| 119717-02411 | 1 | 10 |
| 119717-02930 | 1 | 23 |
| 119717-03031 | 4 | 36 |
| 119717-03070 | 4 | 37 |
| | | 38 |
| 119717-11131 | 4 | 15 |
| 119717-11190 | 4 | 17 |
| 119717-11200 | 4 | 21 |
| 119717-11240 | 4 | 22 |
| 119717-11260 | 4 | 25 |
| 119717-11320 | 4 | 46 |
| 119717-11331 | 4 | 47 |
| | 16 | 4 |
| 119717-11340 | 4 | 18 |
| | 16 | 5 |
| 119717-11350 | 4 | 19 |
| | 16 | 6 |
| 119717-11381 | 4 | 35 |
| 119717-11650 | 4 | 27 |
| 119717-11800 | 4 | 58 |
| 119717-13110 | 5 | 2 |
| | 16 | 9 |
| 119717-13600 | 5 | 3 |
| 119717-14400 | 6 | 2 |
| 119717-14581 | 6 | 3 |
| 119717-21200 | 7 | 4 |
| 119717-23200 | 7 | 27 |

| Parts No. | Fig. No. | Ref. No. |
|---|---|---|
| 119717-23601 | 7 | 28 |
| 119717-23611 | 7 | 31 |
| 119717-23910 | 7 | 30 |
| 119717-25050 | 6 | 9 |
| 119717-25101 | 6 | 10 |
| 119717-25911 | 6 | 21 |
| 119717-25930 | 6 | 15 |
| 119717-26000 | 6 | 17 |
| 119717-32050 | 2 | 20 |
| | 16 | 13 |
| 119717-32060 | 8 | 5 |
| | 16 | 14 |
| 119717-32080 | 2 | 10 |
| 119717-32100 | 2 | 9 |
| 119717-32110 | 2 | 14 |
| 119717-32120 | 2 | 15 |
| 119717-34801 | 8 | 1 |
| 119717-35080 | 8 | 6 |
| 119717-35140 | 8 | 3 |
| 119717-39210 | 8 | 12 |
| 119717-42020 | 9 | 13 |
| | 16 | 15 |
| 119717-42031 | 9 | 3 |
| 119717-42041 | 9 | 4 |
| 119717-42350 | 9 | 17 |
| 119717-44740 | 9 | 19 |
| 119717-49800 | 9 | 23 |
| 119717-51150 | 6 | 16 |
| 119717-51420 | 10 | 63 |
| 119717-51711 | 10 | 88 |
| 119717-51750 | 10 | 89 |
| 119717-51761 | 10 | 90 |
| 119717-51860 | 10 | 104 |
| 119717-51930 | 11 | 2 |
| 119717-59510 | 12 | 32 |
| 119717-61050 | 11 | 3 |
| 119717-61060 | 11 | 93 |
| 119717-61070 | 11 | 4 |
| 119717-77801 | 4 | 56 |
| 119717-77820 | 4 | 57 |
| 119718-11310 | 4 | 45 |
| | 16 | 3 |
| 119718-13100 | 5 | 1 |
| 119740-01501 | 2 | 1 |
| 119740-55601 | 13 | 5 |
| 119751-01521 | 2 | 5 |
| 119751-01590 | 2 | 3 |
| 119802-03100 | 4 | 39 |
| 119802-03110 | 4 | 40 |
| 119802-03121 | 4 | 41 |

| Parts No. | Fig. No. | Ref. No. |
|---|---|---|
| 119802-03131 | 4 | 42 |
| 119802-03141 | 4 | 43 |
| 119802-13620 | 5 | 4 |
| 119802-32130 | 2 | 16 |
| 119810-01200 | 1 | 26 |
| 119810-02941 | 1 | 35 |
| 119810-55340 | 13 | 7 |
| 119810-55650 | 13 | 11 |
| 119813-59950 | 12 | 44 |
| 119833-55660 | 13 | 17 |
| 119840-59570 | 12 | 42 |
| 119865-21600 | 7 | 10 |
| 119C00-61900 | 11 | 79 |
| 119C00-61901 | 11 | 79 -1 |
| 119C10-21650 | 7 | 11 |
| 119C10-21930 | 7 | 13 |
| | 16 | 11 |
| 119C10-21940 | 7 | 14 |
| 119C10-42320 | 9 | 9 |
| 119C10-51250 | 10 | 110 |
| 119C10-53000 | 12 | 1 |
| 119C10-53010 | 12 | 3 |
| 119C10-77600 | 15 | 34 |
| 119E00-01560 | 1 | 1 |
| 119E10-01330 | 1 | 27 |
| | 16 | 2 |
| 119E10-11100 | 4 | 13 |
| 119E10-11110 | 4 | 14 |
| 119E10-11750 | 4 | 4 |
| 119E10-21590 | 7 | 8 |
| 119E10-21700 | 7 | 1 |
| 119E10-22080 | 7 | 16 |
| 119E10-22300 | 7 | 22 |
| 119E10-22500 | 7 | 18 |
| 119E10-22550 | 7 | 34 |
| 119E10-22900 | 7 | 33 |
| 119E10-23000 | 7 | 24 |
| 119E10-42000 | 9 | 1 |
| 119E10-51250 | 10 | 110 -1 |
| 119E10-59810 | 12 | 20 |
| 119E10-59820 | 12 | 24 |
| 119E10-59830 | 12 | 28 |
| 121023-01551 | 2 | 42 |
| 121111-21501 | 7 | 7 |
| | | 39 |
| 121254-55510 | 13 | 8 |
| 121450-42450 | 9 | 26 |
| 121520-34810 | 8 | 2 |
| 121550-49111 | 9 | 25 |
| 121850-51960 | 2 | 21 |

# Parts No. Index

| Parts No. | Fig. No. | Ref. No. |
|---|---|---|
| 121850-51960 | 16 | 18 |
| 122710-51090 | 10 | 8 |
| 123501-79240 | 15 | 4 |
| 124060-01050 | 1 | 11 |
| 124060-21600 | 7 | 40 |
| 124066-59100 | 12 | 40 |
| 124085-02220 | 3 | 4 |
| 124160-01751 | 2 | 29 |
| | 4 | 34 |
| 124160-01910 | 1 | 12 |
| 124195-77770 | 14 | 21 |
| 124240-01871 | 2 | 31 |
| | | 35 |
| 124250-49351 | 9 | 28 |
| 124465-44950 | 9 | 27 |
| | 16 | 16 |
| 124732-77340 | 15 | 31 |
| 129001-32320 | 2 | 12 |
| 129001-32330 | 2 | 13 |
| 129005-59830 | 8 | 13 |
| 129052-79270 | 15 | 17 |
| 129053-55640 | 13 | 15 |
| 129053-55650 | 13 | 16 |
| 129100-01580 | 1 | 28 |
| | 7 | 2 |
| 129100-52200 | 10 | 108 |
| 129150-11230 | 4 | 28 |
| 129150-11750 | 4 | 30 |
| 129150-25301 | 6 | 14 |
| 129150-49360 | 9 | 29 |
| | 16 | 17 |
| 129150-59120 | 12 | 15 |
| 129150-59131 | 12 | 18 |
| 129155-51020 | 10 | 4 |
| 129155-51280 | 10 | 53 |
| | | 54 |
| | 11 | 6 |
| 129155-51400 | 10 | 61 |
| 129155-51580 | 10 | 85 |
| 129155-51701 | 10 | 87 |
| 129155-52051 | 10 | 107 |
| 129155-61460 | 11 | 76 |
| 129240-79300 | 15 | 22 |
| 129242-55750 | 13 | 20 |
| 129242-55760 | 13 | 21 |
| 129335-55740 | 13 | 18 |
| 129335-55750 | 13 | 14 |
| 129335-55770 | 13 | 19 |
| 129335-55780 | 13 | 23 |
| 129350-26490 | 6 | 19 |

| Parts No. | Fig. No. | Ref. No. |
|---|---|---|
| 129350-49530 | 9 | 22 |
| 129400-92420 | 16 | 25 |
| 129423-77200 | 15 | 1 |
| 129423-77710 | 15 | 15 |
| 129508-11180 | 4 | 16 |
| 129698-77110 | 14 | 2 |
| 129698-77120 | 14 | 3 |
| 129698-77130 | 14 | 4 |
| 129698-77140 | 14 | 5 |
| 129698-77150 | 14 | 6 |
| 129698-77161 | 14 | 7 |
| 129698-77180 | 14 | 9 |
| 129698-77190 | 14 | 10 |
| 129698-77250 | 14 | 14 |
| 129900-07900 | 4 | 54 |
| 129900-32130 | 2 | 11 |
| 129901-11450 | 4 | 1 |
| | 16 | 7 |
| 129901-53800 | 12 | 4 |
| 129901-59560 | 12 | 38 |
| | 16 | 19 |
| 129916-49740 | 9 | 10 |
| 129972-77341 | 15 | 32 |
| 129C26-01890 | 2 | 32 |
| | | 36 |
| 158552-61900 | 11 | 82 |
| 158600-51270 | 10 | 52 |
| 158600-51410 | 10 | 62 |
| 158600-51420 | 10 | 64 |
| 158600-51570 | 10 | 84 |
| 158600-51790 | 10 | 91 |
| 171353-44760 | 9 | 20 |
| 22190-080002 | 2 | 33 |
| | | 37 |
| | 8 | 14 |
| | | 16 |
| | 16 | 20 |
| 22190-100002 | 11 | 85 |
| 22190-120002 | 12 | 50 |
| | 13 | 3 |
| | 16 | 21 |
| 22190-160002 | 3 | 10 |
| | 10 | 93 |
| | 16 | 22 |
| 22217-120000 | 10 | 94 |
| 22242-000120 | 4 | 31 |
| 22252-000220 | 7 | 23 |
| 22351-050010 | 10 | 95 |
| 22351-060012 | 4 | 20 |
| 22372-040000 | 11 | 87 |

| Parts No. | Fig. No. | Ref. No. |
|---|---|---|
| 22512-040120 | 7 | 5 |
| | | 15 |
| 22857-500100 | 4 | 48 |
| | | 49 |
| 22857-500160 | 4 | 50 |
| 23414-080000 | 9 | 14 |
| | 16 | 23 |
| 23857-030000 | 8 | 15 |
| 23876-005000 | 4 | 12 |
| 23876-030000 | 2 | 6 |
| 24101-062024 | 2 | 8 |
| 24104-060054 | 6 | 20 |
| 24311-000110 | 13 | 22 |
| 24311-000320 | 2 | 30 |
| | 4 | 51 |
| | 16 | 24 |
| 24311-000440 | 13 | 24 |
| 24311-240100 | 13 | 13 |
| 24341-000240 | 2 | 43 |
| 24357-240200 | 11 | 81 |
| 25132-003700 | 9 | 18 |
| 26022-050122 | 10 | 99 |
| 26106-060102 | 8 | 10 |
| | 11 | 67 |
| | | 88 |
| 26106-060122 | 2 | 22 |
| | 6 | 8 |
| 26106-060142 | 10 | 111 |
| | 11 | 89 |
| 26106-060162 | 2 | 23 |
| | | 44 |
| | 10 | 111 -1 |
| 26106-060202 | 4 | 52 |
| | 11 | 90 |
| 26106-060222 | 3 | 5 |
| 26106-060352 | 6 | 13 |
| 26106-060402 | 2 | 24 |
| | | 25 |
| | 9 | 21 |
| 26106-060452 | 11 | 91 |
| 26106-060602 | 2 | 26 |
| 26106-060652 | 2 | 27 |
| 26106-060752 | 4 | 53 |
| 26106-080122 | 2 | 34 |
| | 3 | 11 |
| | 9 | 15 |
| 26106-080142 | 2 | 38 |
| | 10 | 112 |
| 26106-080162 | 4 | 55 |
| | 10 | 112 -1 |

| Parts No. | Fig. No. | Ref. No. |
|---|---|---|
| 26106-080202 | 9 | 24 |
| | 15 | 33 |
| 26106-080302 | 3 | 12 |
| 26106-080402 | 4 | 33 |
| 26106-080452 | 3 | 13 |
| 26106-080502 | 3 | 14 |
| | 9 | 16 |
| 26106-080702 | 2 | 39 |
| 26106-100452 | 15 | 29 |
| 26306-080002 | 2 | 28 |
| | | 40 |
| | | 41 |
| | 5 | 6 |
| 26366-080002 | 11 | 68 |
| 26577-060122 | 9 | 11 |
| 26716-120002 | 10 | 101 |
| 26756-060002 | 11 | 92 |
| 26979-050162 | 4 | 32 |
| 27241-120000 | 1 | 13 |
| 27241-250000 | 9 | 12 |
| 719717-02901 | 1 | 29 |
| 719717-02911 | 1 | 32 |
| 719751-01500 | 2 | 4 |
| 719E10-51340 | 10 | 1 |
| 719E21-92601 | 16 | 1 |
| 977770-1207F | 16 | 26 |
| X9490561001 | 15 | 2 |