YANMAR

PARTS CATALOG

0CD50-M02100EN

Last update Oct., 2021

PREFACE

This parts catalog is the 1st edition of 3TNV80F-SPSU for SUNWARD.

Published : April, 2016

Contents

0CD50-M02100

Fig. No.	Fig. Name
3TNV80F-SPSU	
1.	CYLINDER BLOCK
2.	GEAR HOUSING
3.	FLYWHEEL HOUSING & OIL SUMP
4.	CYLINDER HEAD & BONNET
5.	AIR CLEANER
6.	EXHAUST MANIFOLD
7.	CAMSHAFT & DRIVING GEAR
8.	CRANKSHAFT & PISTON
9.	LUB. OIL SYSTEM
10.	COOLING WATER SYSTEM
11.	FUEL INJECTION PUMP
12.	GOVERNOR
13.	FUEL INJECTION VALVE
14.	FUEL PIPE
15.	STARTER MOTOR
16.	GENERATOR
17.	GASKET SET

Fig. No.	Fig. Name

Fig.1. CYLINDER BLOCK

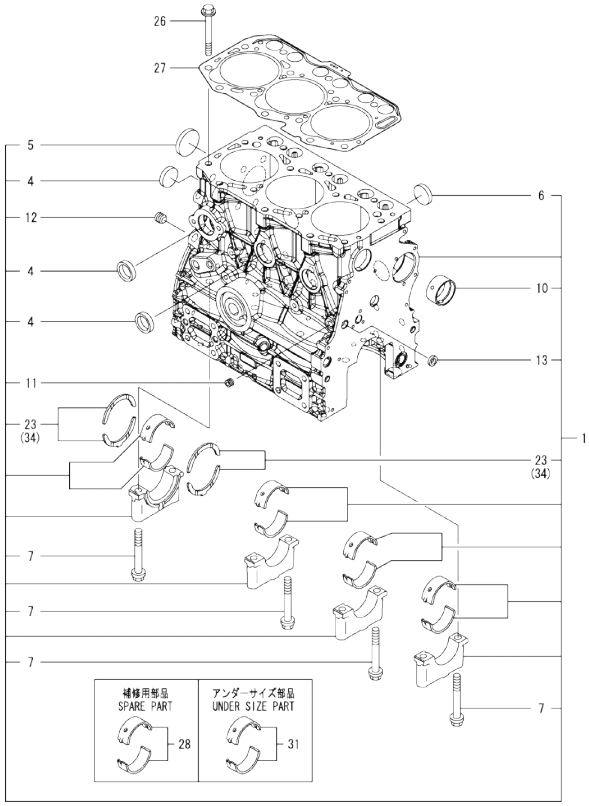

Remarks
(1)Spare parts.
(2)Under-sized(U.S.=0.25) parts.
(3)Over-sized(O.S.=0.25) parts.

(A)=3TNV80F-SPSU
(B)=
(C)=
(D)=
(E)=
(F)=

No.	Lev.	Parts No.	Description	Q'ty (A)	(B)	(C)	(D)	(E)	(F)	I	R
1	1	119E00-01560	BLOCK ASSY, CYLINDER	1							
4	2	105311-01090	PLUG, CUP TYPE 30	4							
5	2	119623-01250	PLUG, DISH TYPE 45	1							
6	2	119285-01990	PLUG, CUP TYPE 25	3							
7	2	119620-02020	BOLT, METAL CAP	8							
10	2	119717-02411	BUSH, CAMSHAFT	1							
11	2	124060-01050	PLUG, PT1/8	1							
12	2	124160-01910	PLUG, PT1/4	1							
13	2	27241-120000	PLUG, 12	1							
23	2	119717-02930	BEARING ASSY, THRUST	2							
26	1	119810-01200	BOLT, CYLINDER HEAD	14							
27	1	119E10-01330	GASKET SET, HEAD	1							
28	1	719717-02901	BEARING ASSY, MAIN	4							1
31	1	719717-02911	BEARING ASSY, MAIN	4							2
34	1	119810-02941	BEARING, THRUST 0.25	2							3

N:Old ←Yes/No→ New. Q:Old ←No/Yes→ New, R:Old ←Yes/Yes→ New, S:Old ←No/No→ New. W:Add. Z:Discontinued. F:Interchangeable by set. K:Q'ty Change

Copyright (C) 2016 YANMAR GLOBAL CS CO., LTD. All RightsReserved.

Fig.2. GEAR HOUSING

(A)=3TNV80F-SPSU
(B)=
(C)=
(D)=
(E)=
(F)=

No.	Lev.	Parts No.	Description	Q'ty (A)	(B)	(C)	(D)	(E)	(F)	I	R
1	1	119717-01501	CASE, GEAR	1							
2	1	119717-01570	BOLT, STUD	3							
3	1	119734-01590	COVER ASSY,GEAR CASE	1							
4	2	719734-01500	COVER ASSY,GEAR CASE	1							
5	3	119717-01521	COVER, GEAR CASE	1							
6	4	23876-030000	PLUG, R03	2							
7	3	119717-01800	SEAL, OIL	1							
8	2	119717-32100	COVER ASSY	1							
9	3	119717-32080	COVER, PUMP	1							
10	3	129900-32130	VALVE, RELIEF	1							
11	3	129001-32320	SPRING	1							
12	3	129001-32330	PLUG	1							
13	2	119717-32110	ROTOR, INNER	1							
14	2	119717-32120	ROTOR, OUTER	1							
15	2	119802-32130	SCREW, M6X16	8							
16	1	119717-01750	COVER, PUMP	1							
17	1	119660-01911	PIPE, DOWEL 6X17	4							
18	1	119624-32040	O-RING, P12.0	1							
19	1	119717-32050	O-RING, P17.0	3							
20	1	121850-51960	O-RING	1							
21	1	26106-060122	BOLT, M6X 12 PLATED	1							
22	1	26106-060162	BOLT, M6X 16 PLATED	4							
23	1	26106-060402	BOLT, M6X 40 PLATED	4							
24	1	26106-060402	BOLT, M6X 40 PLATED	3							
25	1	26106-060602	BOLT, M6X 60 PLATED	7							
26	1	26106-060652	BOLT, M6X 65 PLATED	2							
27	1	26306-080002	NUT, M8	3							
28	1	124160-01751	CAP, FILLER	1							
29	1	24311-000320	O-RING, 1AP32.0	1							

N:Old ←Yes/No→ New. Q:Old ←No/Yes→ New. R:Old ←Yes/Yes→ New. S:Old ←No/No→ New. W:Add. Z:Discontinued. F:Interchangeable by set. K:Q'ty Change

Copyright (C) 2016 YANMAR GLOBAL CS CO., LTD. All RightsReserved.

Fig.3. FLYWHEEL HOUSING & OIL SUMP

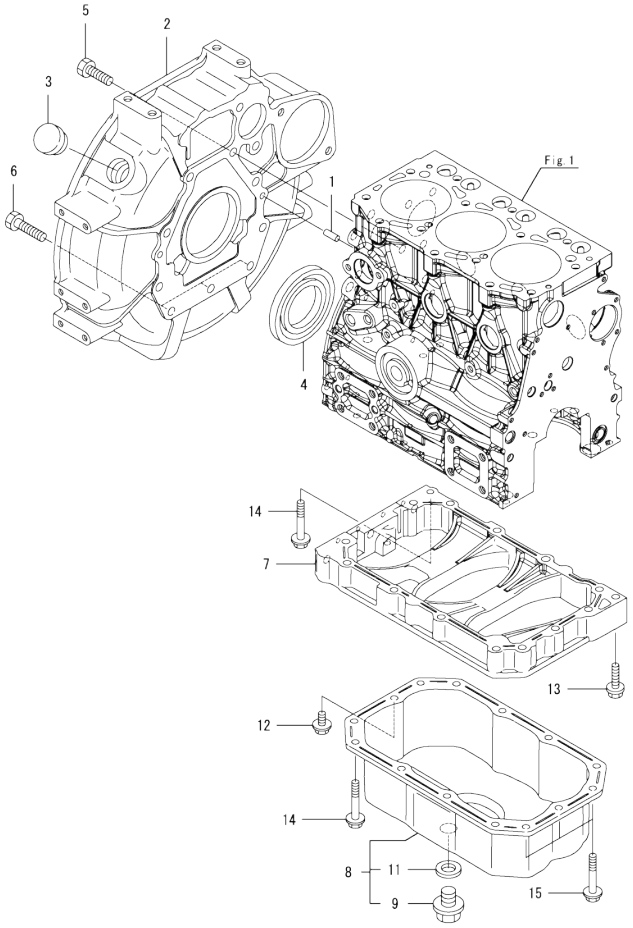

(A)=3TNV80F-SPSU (D)=
(B)= (E)=
(C)= (F)=

No.	Lev.	Parts No.	Description	Q'ty (A)	(B)	(C)	(D)	(E)	(F)	I	R
1	1	129100-01580	PIN, PARALLEL 8X16	2							
2	1	119717-01601	HOUSING, FLYWHEEL	1							
3	1	119620-01750	CAP, WHEEL COVER	1							
4	1	124085-02220	SEAL, METAL HOUSING	1							
4-1	1	119734-02220	SEAL, OIL WHEEL SIDE	1						N	
	(A=E11107)										
5	1	26206-100252	BOLT, M10X 25 PLATED	8							
6	1	26206-100302	BOLT, M10X 30 PLATED	3							
7	1	119717-01720	SPACER, OIL PAN	1							
8	1	119740-01770	OIL PAN ASSY	1							
9	2	105425-01690	PLUG, DRAIN M16	1							
11	2	22190-160002	WASHER, SEAL 16	1							
12	1	26106-080122	BOLT, M8X 12 PLATED	1							
13	1	26106-080302	BOLT, M8X 30 PLATED	1							
14	1	26106-080452	BOLT, M8X 45 PLATED	11							
15	1	26106-080502	BOLT, M8X 50 PLATED	3							

N:Old ←Yes/No→ New. Q:Old ←No/Yes→ New. R:Old ←Yes/Yes→ New. S:Old ←No/No→ New. W:Add. Z:Discontinued. F:Interchangeable by set. K:Q'ty Change

Copyright (C) 2016 YANMAR GLOBAL CS CO., LTD. All RightsReserved.

Fig.4. CYLINDER HEAD & BONNET

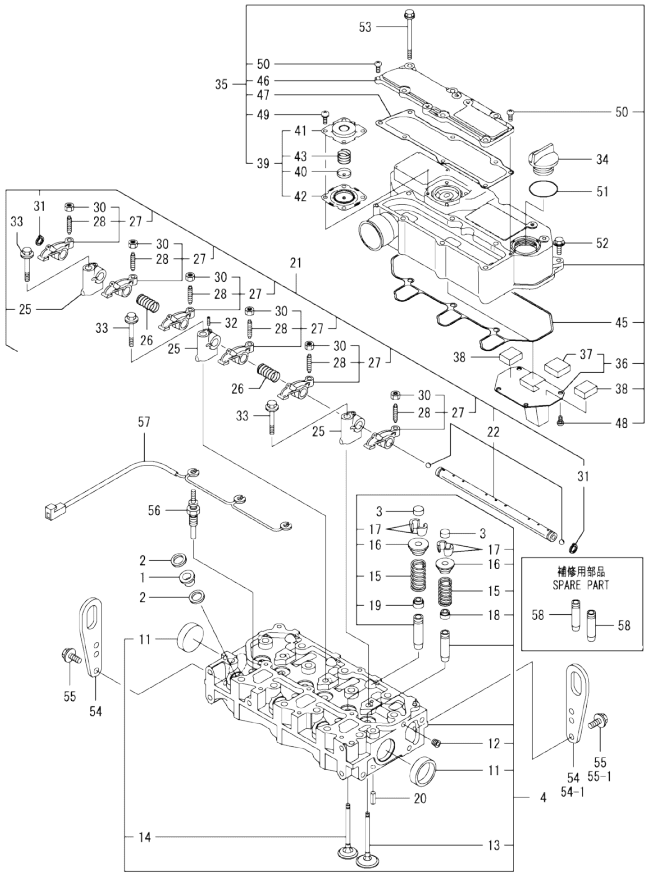

(A)=3TNV80F-SPSU (D)=
(B)= (E)=
(C)= (F)=

No.	Lev.	Parts No.	Description	Q'ty (A)	(B)	(C)	(D)	(E)	(F)	I	R
1	1	129901-11450	PROTECTOR, NOZZLE	3							
2	1	119600-11460	GASKET, NOZZLE	6							
3	1	105010-11490	CAP, VALVE	6							
4	1	119E10-11740	HEAD ASSY, CYLINDER	1							
11	2	119285-11990	PLUG, 35	2							
12	2	23876-005000	PLUG, R005	1							
13	2	119E10-11100	VALVE, INTAKE	3							
14	2	119E10-11110	VALVE, EXHAUST	3							
15	2	119717-11131	SPRING, VALVE	6							
16	2	129508-11180	RETAINER, SPRING	6							
17	2	119717-11190	COTTER, VALVE	12							
18	2	119717-11340	SEAL, VALVE STEM	3							
19	2	119717-11350	SEAL, VALVE STEM	3							
20	1	22351-060012	PIN, SPRING 6.0X12	2							
21	1	119717-11200	SUPPORT ASSY, ROCKER	1							
22	2	119717-11240	SHAFT ASSY, ARM	1							
25	2	119717-11260	SUPPORT, ROCKER ARM	3							
26	2	119620-11280	SPRING, SHAFT	2							
27	2	119717-11650	ARM ASSY, ROCKER INT	6							
28	3	129150-11230	SCREW, VALVE ADJUST	6							
30	3	129150-11750	NUT, M8XP1.0	6							
31	2	22242-000120	RING, 12	2							
32	2	26979-050162	SCREW, M5X16	1							
33	1	26106-080402	BOLT, M8X 40 PLATED	3							
34	1	124160-01751	CAP, FILLER	1							
35	1	119717-11381	BONNET ASSY, HEAD	1							
36	2	119717-03031	PLATE, BAFFLE	1							
37	3	119717-03070	BAFFLE, BREATHER	1							
38	2	119717-03070	BAFFLE, BREATHER	2							
39	2	119802-03100	DIAPHRAGM ASSY	1							
40	3	119802-03110	PLATE, DIAPHRAGM	1							
41	3	119802-03121	COVER, DIAPHRAGM	1							
42	3	119802-03131	DIAPHRAGM, BREATHER	1							
43	3	119802-03141	SPRING, DIAPHRAGM	1							
45	2	119718-11310	GASKET, BONNET	1							
46	2	119717-11320	COVER, BONNET	1							
47	2	119717-11331	GASKET, BONNET COVER	1							
48	2	22857-500100	SCREW, 5X10	4							
49	2	22857-500100	SCREW, 5X10	4							
50	2	22857-500160	SCREW, 5X16	2							
51	1	24311-000320	O-RING, 1AP32.0	1							
52	1	26106-060202	BOLT, M6X 20 PLATED	3							
53	1	26106-060752	BOLT, M6X 75 PLATED	6							
54	1	119226-07900	LIFTER, ENGINE	2							
54-1	1	119226-07900	LIFTER, ENGINE	1						K	
	(A=E11107)										
55	1	26106-080162	BOLT, M8X 16 PLATED	4							
55-1	1	26106-080162	BOLT, M8X 16 PLATED	2						K	
	(A=E11107)										
56	1	119717-77801	PLUG, GLOW	3							
57	1	119717-77820	CONNECTOR, GLOW PLUG	1							

Remarks
(1)Spare parts.

N:Old ←Yes/No→ New. Q:Old ←No/Yes→ New. R:Old ←Yes/Yes→ New. S:Old ←No/No→ New. W:Add. Z:Discontinued. F:Interchangeable by set. K:Q'ty Change

++ CONTINUE ++

Copyright (C) 2016 YANMAR GLOBAL CS CO., LTD. All RightsReserved.

Fig.4. CYLINDER HEAD & BONNET

(A)=3TNV80F-SPSU
(B)=
(C)=
(D)=
(E)=
(F)=

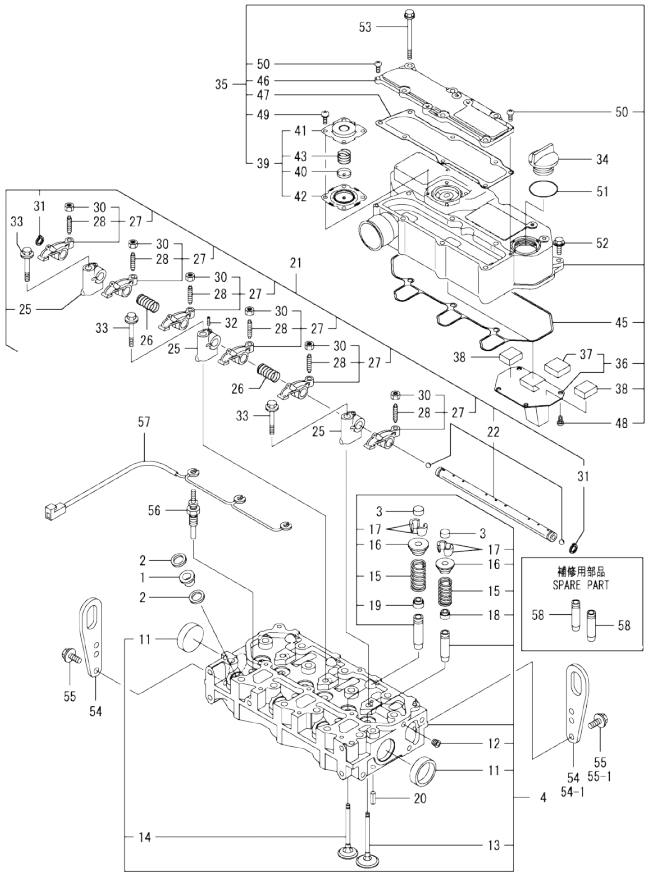

No.	Lev.	Parts No.	Description	Q'ty (A)	(B)	(C)	(D)	(E)	(F)	I	R
58	1	119717-11800	GUIDE, VALVE	6							1

Remarks
(1)Spare parts.

N:Old ←Yes/No→ New. Q:Old ←No/Yes→ New. R:Old ←Yes/Yes→ New. S:Old ←No/No→ New. W:Add. Z:Discontinued. F:Interchangeable by set. K:Q'ty Change

Copyright (C) 2016 YANMAR GLOBAL CS CO., LTD. All RightsReserved.

Fig.5. AIR CLEANER

(A)=3TNV80F-SPSU
(B)=
(C)=
(D)=
(E)=
(F)=

No.	Lev.	Parts No.	Description	Q'ty (A)	(B)	(C)	(D)	(E)	(F)	I	R
1	1	119540-12520	AIR CLEANER ASSY	1							
2	2	119808-12540	VALVE, UNLOAD	1							
3	2	119655-12560	ELEMENT	1							
4	2	119336-12570	COVER ASSY	1							
5	2	105027-12580	RING, VALVE	1							
6	2	129612-12650	LABEL, MARKING	1							
7	2	119140-12680	INDICATOR, CLEANER	1							
8	2	119233-12700	ELEMENT, INNER	1							

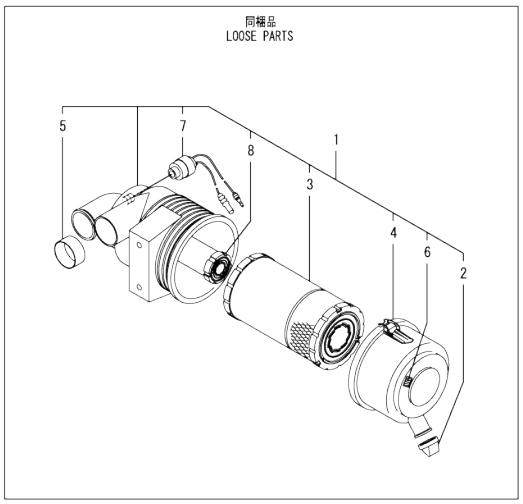

N:Old ◄Yes/No► New. Q:Old ◄No/Yes► New. R:Old ◄Yes/Yes► New. S:Old ◄No/No► New. W:Add. Z:Discontinued. F:Interchangeable by set. K:Q'ty Change

Copyright (C) 2016 YANMAR GLOBAL CS CO., LTD. All RightsReserved.

Fig.6. EXHAUST MANIFOLD

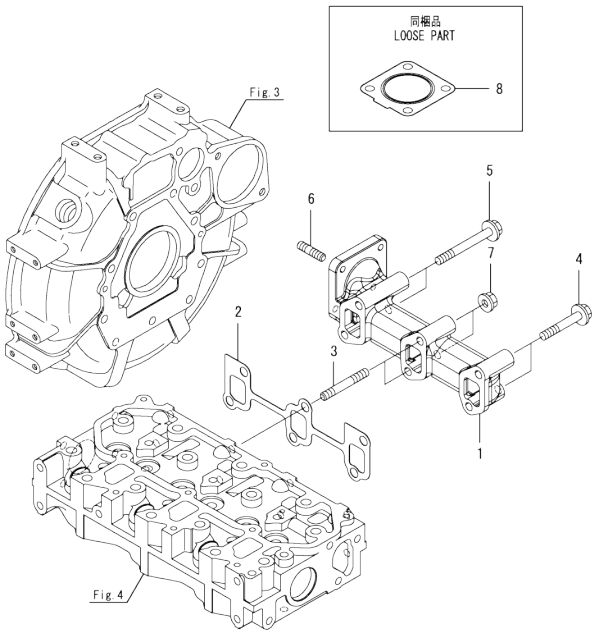

(A)=3TNV80F-SPSU
(B)=
(C)=
(D)=
(E)=
(F)=

No.	Lev.	Parts No.	Description	Q'ty (A)	(B)	(C)	(D)	(E)	(F)	I	R
1	1	119740-13100	MANIFOLD, EXHAUST	1							
2	1	119717-13110	GASKET, EXH.MANIFOLD	1							
3	1	119717-13600	BOLT, STUD M8X50	2							
4	1	129E00-13610	BOLT, M8X50 10.9	2							
5	1	129E00-13630	BOLT, M8X71 10.9T	2							
6	1	119131-18320	BOLT, STUD M8X22	4							
7	1	26306-080002	NUT, M8	2							
8	1	119515-13200	GASKET, SILENCER	2							

N:Old ←Yes/No→ New. Q:Old ←No/Yes→ New. R:Old ←Yes/Yes→ New. S:Old ←No/No→ New. W:Add. Z:Discontinued. F:Interchangeable by set. K:Q'ty Change

Copyright (C) 2016 YANMAR GLOBAL CS CO., LTD. All RightsReserved.

Fig.7. CAMSHAFT & DRIVING GEAR

(A)=3TNV80F-SPSU
(B)=
(C)=
(D)=
(E)=
(F)=

No.	Lev.	Parts No.	Description	Q'ty (A)	(B)	(C)	(D)	(E)	(F)	I	R
1	1	119620-14200	TAPPET	6							
2	1	119717-14400	PUSH-ROD	6							
3	1	119717-14581	CAMSHAFT ASSY	1							
8	1	26106-060122	BOLT, M6X 12 PLATED	2							
9	1	119717-25050	SHAFT, IDLE	1							
10	1	119717-25101	GEAR ASSY, IDLE	1							
13	1	26106-060352	BOLT, M6X 35 PLATED	3							
14	1	129150-25301	BOLT	4							
15	1	119717-25930	GEAR, PUMP	1							
16	1	119717-25911	BUSH, IDLE GEAR	1							1
17	1	119717-51150	FLANGE	1							

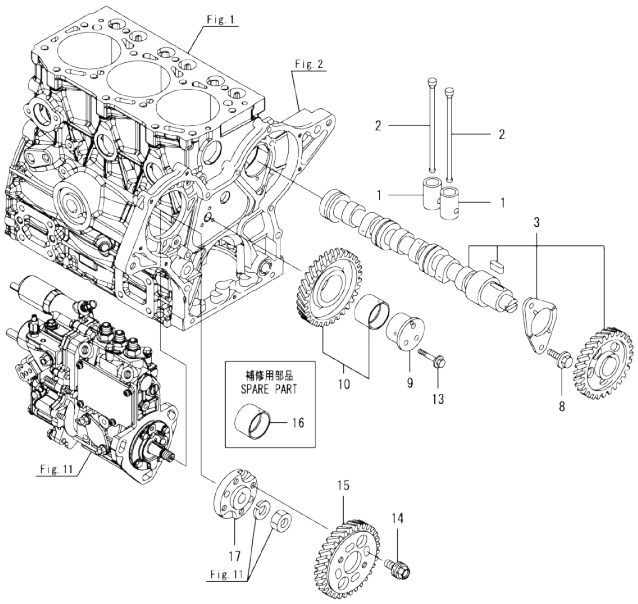

Remarks
(1)Spare parts.

N:Old ←Yes/No→ New. Q:Old ←No/Yes→ New. R:Old ←Yes/Yes→ New. S:Old ←No/No→ New. W:Add. Z:Discontinued. F:Interchangeable by set. K:Q'ty Change

Copyright (C) 2016 YANMAR GLOBAL CS CO., LTD. All RightsReserved.

Fig.8. CRANKSHAFT & PISTON

(A)=3TNV80F-SPSU
(B)=
(C)=
(D)=
(E)=
(F)=

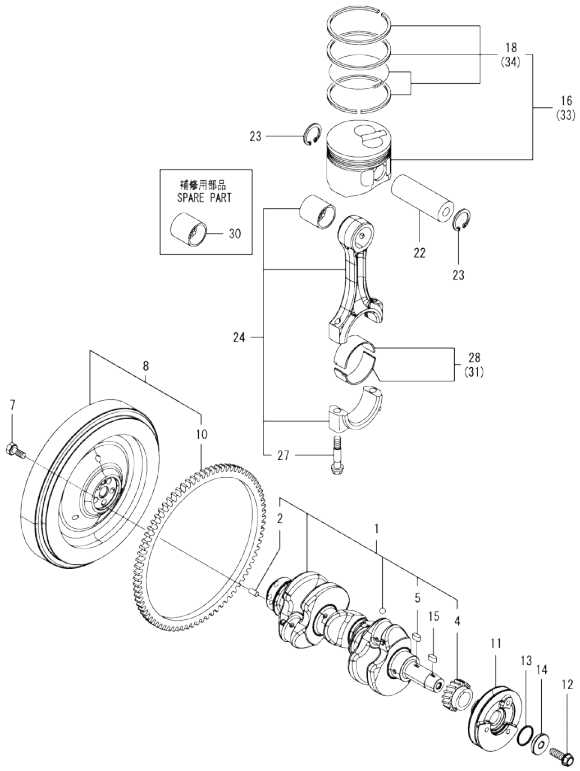

No.	Lev.	Parts No.	Description	Q'ty (A)	(B)	(C)	(D)	(E)	(F)	I	R
1	1	119E10-21700	CRANKSHAFT ASSY	1							
2	2	129100-01580	PIN, PARALLEL 8X16	1							
4	2	119717-21200	GEAR, CRANKSHAFT	1							
5	2	22512-040120	KEY, 4X 12	1							
7	1	121111-21501	BOLT, FLYWHEEL	5							
8	1	119E10-21590	FLYWHEEL ASSY	1							
10	2	119865-21600	GEAR, RING Z=116	1							
11	1	119C10-21650	V-PULLEY, CRANKSHAFT	1							
12	1	119621-21681	BOLT, FLANGE 12X1.25	1							
13	1	119C10-21930	GASKET, WASHER	1							
14	1	119C10-21940	WASHER, V-PULLEY	1							
15	1	22512-040120	KEY, 4X 12	1							
16	1	119E10-22080	PISTON ASSY	3							
18	2	119E10-22500	RING ASSY	3							
22	1	119E10-22300	PIN, PISTON	3							
23	1	22252-000220	RING, 22	6							
24	1	119E10-23000	ROD ASSY, CONNECTING	3							
27	2	119717-23200	BOLT, CONNECTING ROD	6							
28	1	119717-23601	BEARING, CRANK PIN	3							
30	1	119717-23910	BEARING, PISTON PIN	3							1
31	1	119717-23611	METAL ASSY, 0.25	3							2
33	1	119E10-22900	PISTON ASSY, 0.25 OS	3							3
34	2	119E10-22550	RING ASSY, 0.25	3							3

Remarks
(1)Spare parts.
(2)Under-sized(U.S.=0.25) parts.
(3)Over-sized(O.S.=0.25) parts.

N:Old ←Yes/No→ New. Q:Old ←No/Yes→ New, R:Old ←Yes/Yes→ New, S:Old ←No/No→ New. W:Add. Z:Discontinued. F:Interchangeable by set. K:Q'ty Change

Copyright (C) 2016 YANMAR GLOBAL CS CO., LTD. All RightsReserved.

Fig.9. LUB. OIL SYSTEM

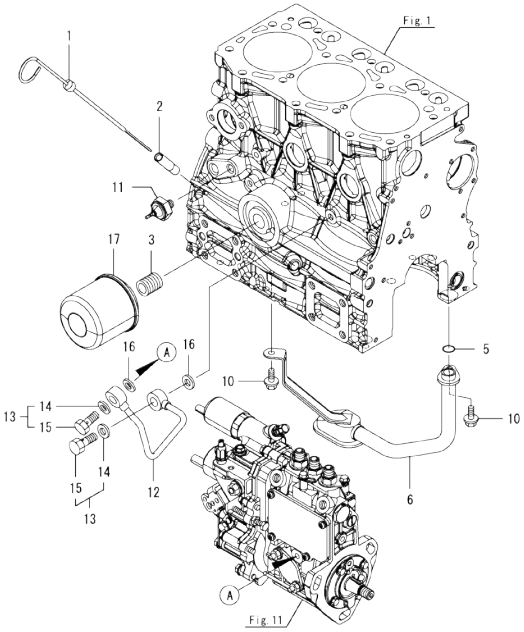

(A)=3TNV80F-SPSU
(B)=
(C)=
(D)=
(E)=
(F)=

No.	Lev.	Parts No.	Description	Q'ty (A)	(B)	(C)	(D)	(E)	(F)	I	R
1	1	119717-34801	DIPSTICK	1							
2	1	121520-34810	GUIDE, DIPSTICK	1							
3	1	119717-35140	BOLT, STUD	1							
5	1	119717-32060	O-RING, P15.0	1							
6	1	119717-35080	PIPE ASSY, OIL INLET	1							
10	1	26106-060102	BOLT, M6X 10 PLATED	2							
11	1	114250-39450	SWITCH, HYDRAULIC	1							
12	1	119717-39210	PIPE, OIL	1							
13	1	129005-59830	BOLT ASSY, JOINT M8	2							
14	2	22190-080002	WASHER, SEAL 8	2							
15	2	23857-030000	BOLT, JOINT 3	2							
16	1	22190-080002	WASHER, SEAL 8	2							
17	1	119305-35151	FILTER ASSY, D68XL65	1							1

Remarks
(1)Spare parts.

N:Old ◄Yes/No► New. Q:Old ◄No/Yes► New, R:Old ◄Yes/Yes► New, S:Old ◄No/No► New. W:Add. Z:Discontinued. F:Interchangeable by set. K:Q'ty Change

Copyright (C) 2016 YANMAR GLOBAL CS CO., LTD. All RightsReserved.

Fig.10. COOLING WATER SYSTEM

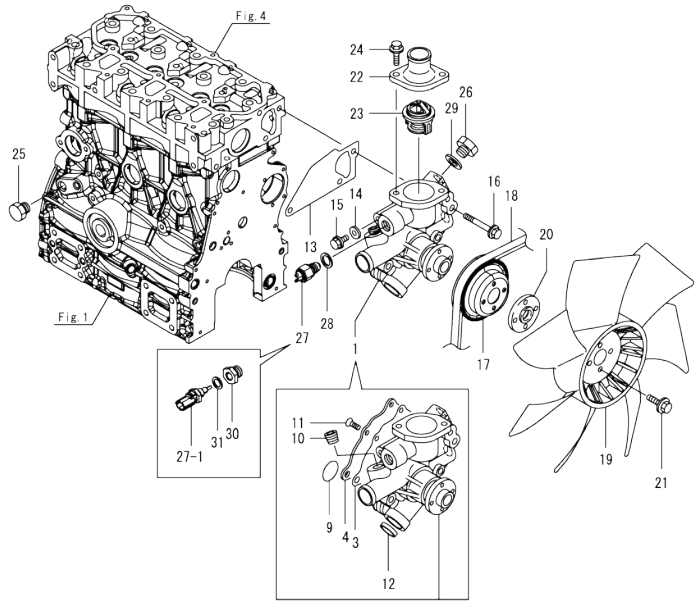

(A)=3TNV80F-SPSU (D)=
(B)= (E)=
(C)= (F)=

No.	Lev.	Parts No.	Description	Q'ty (A)	(B)	(C)	(D)	(E)	(F)	I	R
1	1	119E10-42000	PUMP ASSY, WATER	1							
3	2	119717-42031	GASKET, WATER PUMP	1							
4	2	119717-42041	COVER, WATER PUMP	1							
9	2	119C10-42320	O-RING, 2028	1							
10	2	129916-49740	PLUG, R3/8	1							
11	2	26577-060122	SCREW, M6X12	4							
12	2	27241-250000	PLUG, 25	1							
13	1	119717-42020	GASKET, WATER PUMP	1							
14	1	23414-080000	GASKET, 8X1.0	1							
15	1	26106-080122	BOLT, M8X 12 PLATED	1							
16	1	26106-080502	BOLT, M8X 50 PLATED	3							
17	1	119740-42350	V-PULLEY, PUMP D=90	1							
18	1	171001-42290	V-BELT, A35.5	1							
18-1	1	119740-42370	V-BELT, A35.5	1						N	
	(A=E11107)										
19	1	119717-44740	FAN, COOLING D=335X7	1							
20	1	124574-44761	SPACER, FAN 8MM	1							
21	1	26106-060202	BOLT, M6X 20 PLATED	4							
22	1	129350-49530	COVER, THERMOSTAT	1							
23	1	119717-49800	THERMOSTAT, 71C	1							
24	1	26106-080202	BOLT, M8X 20 PLATED	2							
25	1	171056-49120	PLUG, DRAIN R1/4	1							
26	1	121450-42450	PLUG, M16	1							
27	1	121250-44901	SWITCH, TEMPERATURE	1							
27-1	1	129927-44900	SENSOR, TEMPERATURE	1						S	
	(A=*2021.08)										
28	1	124465-44950	GASKET, 16	1							
29	1	124465-44950	GASKET, 16	1							
30	1	129974-49350	JOINT, SENSOR	1						W	
	(A=*2021.08)										
31	1	22190-120002	WASHER, SEAL 12	1						W	
	(A=*2021.08)										

N:Old ◄Yes/No► New. Q:Old ◄No/Yes► New. R:Old ◄Yes/Yes► New. S:Old ◄No/No► New. W:Add. Z:Discontinued. F:Interchangeable by set. K:Q'ty Change

Copyright (C) 2016 YANMAR GLOBAL CS CO., LTD. All RightsReserved.

Fig.11. FUEL INJECTION PUMP

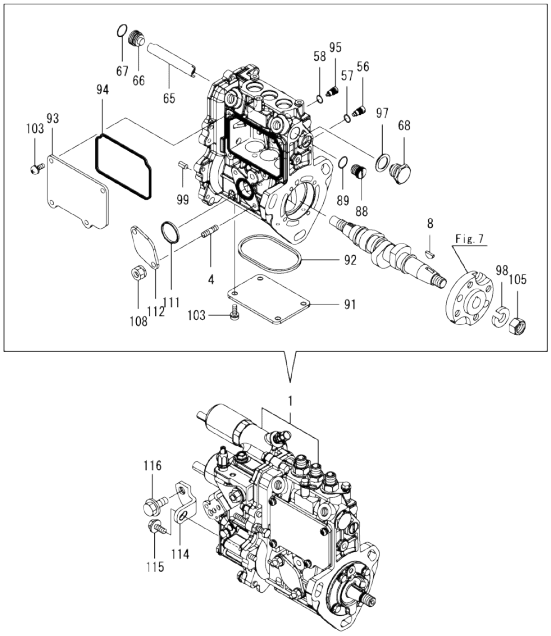

Remarks
(1)Governor(Fig.12) is incorporated in this Fuel Injection Pump(No.1).

(A)=3TNV80F-SPSU (D)=
(B)= (E)=
(C)= (F)=

No.	Lev.	Parts No.	Description	Q'ty (A)	(B)	(C)	(D)	(E)	(F)	I	R
1	1	719E40-51410	FIE ASSY	1							1
4	2	129155-51020	STUD	2							
8	2	122710-51090	KEY, FEATHER	1							
56	2	158600-51270	STOPPER, TAPPET	3							
57	2	129155-51280	O-RING, S6	3							
58	2	129155-51280	O-RING, S6	1							
65	2	129155-51400	PROTECTOR	1							
66	2	158600-51410	PLUG, DEFLIFTER M12	1							
67	2	119717-51420	O-RING	1							
68	2	158600-51420	PLUG, DEFLIFTER M16	1							
88	2	158600-51570	PLUG, RACK	1							
89	2	129155-51580	O-RING	1							
91	2	129155-51701	COVER, PUMP BOTTOM	1							
92	2	119717-51711	GASKET, PUMP	1							
93	2	119717-51750	COVER, BODY SIDE	1							
94	2	119717-51761	GASKET, PUMP COVER	1							
95	2	158600-51790	STOPPER, RACK	1							
97	2	22190-160002	WASHER, SEAL 16	1							
98	2	22217-120000	WASHER, SPRING 12	1							
99	2	22351-050010	PIN, SPRING 5.0X10	2							
103	2	26022-050122	SCREW, M5X12	8							
105	2	26716-120002	NUT, M12	1							
108	2	119717-51860	NUT, M6	2							
111	2	129155-52051	GASKET, PUMP COVER	1							
112	2	129100-52200	COVER, FEED PUMP	1							
114	1	119C10-51250	SUPPORT, FUEL PUMP	1							
114-1	1	119E10-51250	SUPPORT	1							N
	(A=E17535)										
115	1	26106-060142	BOLT, M6X 14 PLATED	1							
115-1	1	26106-060162	BOLT, M6X 16 PLATED	1							N
	(A=E17535)										
116	1	26106-080142	BOLT, M8X 14 PLATED	1							
116-1	1	26106-080162	BOLT, M8X 16 PLATED	1							N
	(A=E17535)										

N:Old $\overset{\text{Yes}}{\underset{\text{No}}{\leftrightarrow}}$ New. Q:Old $\overset{\text{No}}{\underset{\text{Yes}}{\leftrightarrow}}$ New. R:Old $\overset{\text{Yes}}{\underset{\text{Yes}}{\leftrightarrow}}$ New. S:Old $\overset{\text{No}}{\underset{\text{No}}{\leftrightarrow}}$ New. W:Add. Z:Discontinued. F:Interchangeable by set. K:Q'ty Change

Copyright (C) 2016 YANMAR GLOBAL CS CO., LTD. All RightsReserved.

Fig.12. GOVERNOR

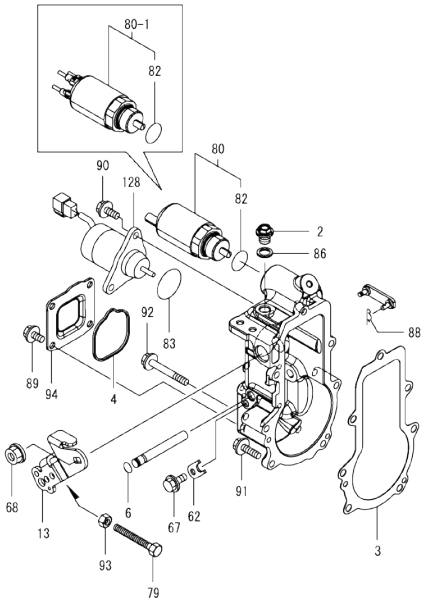

(A)=3TNV80F-SPSU (D)=
(B)= (E)=
(C)= (F)=

No.	Lev.	Parts No.	Description	Q'ty (A)	(B)	(C)	(D)	(E)	(F)	I	R
2	2	119717-51930	PLUG, M10	1							
3	2	119717-61050	GASKET, CASE	1							
4	2	119717-61070	GASKET, COVER	1							
6	2	129155-51280	O-RING, S6	1							
13	2	119515-61440	LEVER, CONTROL	1							
62	2	119660-61901	STOPPER, SHAFT	1							
67	2	26106-060102	BOLT, M6X 10 PLATED	1							
68	2	26366-080002	NUT, M8	1							
79	2	129155-61460	BOLT, IDLE LIMIT	1							
80	2	119C00-61900	SOLENOID, CONTROL	1							
80-1	2	119C00-61901	SOLENOID, POWER CONT	1							R
	(A=E43239)										
82	3	24357-240200	PACKING, 24020	1							
83	2	158552-61900	O-RING	1							
86	2	22190-100002	WASHER, SEAL 10	1							
88	2	22372-040000	PIN, SNAP 4	1							
89	2	26106-060102	BOLT, M6X 10 PLATED	4							
90	2	26106-060142	BOLT, M6X 14 PLATED	2							
91	2	26106-060202	BOLT, M6X 20 PLATED	4							
92	2	26106-060452	BOLT, M6X 45 PLATED	3							
93	2	26756-060002	NUT, LOCK M6	1							
94	2	119717-61060	COVER, GOVERNOR CASE	1							
128	2	129630-77900	SOLENOID, STOP	1							

Remarks
* This figure(Governor) is incorporated in the Fuel Injection Pump(Fig.11).

N:Old ◄Yes/No► New. Q:Old ◄No/Yes► New. R:Old ◄Yes/Yes► New. S:Old ◄No/No► New. W:Add. Z:Discontinued. F:Interchangeable by set. K:Q'ty Change

Copyright (C) 2016 YANMAR GLOBAL CS CO., LTD. All RightsReserved.

Fig.13. FUEL INJECTION VALVE

(A)=3TNV80F-SPSU
(B)=
(C)=
(D)=
(E)=
(F)=

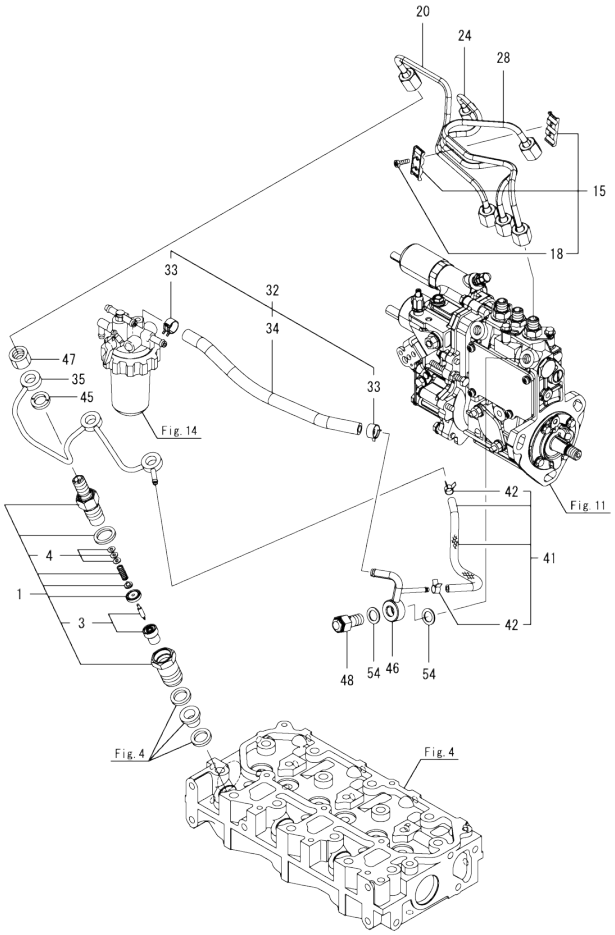

No.	Lev.	Parts No.	Description	Q'ty (A)	(B)	(C)	(D)	(E)	(F)	I	R
1	1	119C10-53000	VALVE ASSY,INJECTION	3							
3	2	119C10-53010	VALVE ASSY,INJECTION	3							
4	2	129901-53800	SHIM SET, ADJUSTING	3							
15	1	129150-59120	RETAINER, PIPE	1							
18	2	129150-59131	BOLT, M4X14	2							
20	1	119E10-59810	PIPE ASSY, INJECTION	1							
24	1	119E10-59820	PIPE, INJECTION NO.2	1							
28	1	119E10-59830	PIPE, INJECTION NO.3	1							
32	1	129210-59070	HOSE ASSY, FUEL L260	1							
32-1	1	129210-59170	HOSE ASSY, FUEL L440	1						N	
	(A=E11107)										
33	2	124766-59050	CLAMP, HOSE 11.5	2							
34	2	105025-59760	HOSE, FUEL	1							
34-1	2	105225-59511	HOSE, FUEL	1						N	
	(A=E11107)										
35	1	119717-59510	PIPE ASSY, RETURN	1							
41	1	119744-59560	HOSE ASSY, RETURN	1							
41-1	1	119540-59570	HOSE ASSY, RETURN	1						N	
	(A=E11107)										
42	2	124066-59100	CLAMP, HOSE 8	2							
45	1	129901-59560	GASKET, FUEL RETURN	3							
46	1	119515-59581	JOINT, OVERFLOW	1							
46-1	1	119840-59570	JOINT, OVERFLOW	1						N	
	(A=E11107)										
47	1	119620-59700	NUT, NOZZLE RETURN	3							
48	1	119813-59950	VALVE ASSY, CHECK	1							
54	1	22190-120002	WASHER, SEAL 12	2							

N:Old ←Yes/No→ New. Q:Old ←No/Yes→ New. R:Old ←Yes/Yes→ New. S:Old ←No/No→ New. W:Add. Z:Discontinued. F:Interchangeable by set. K:Q'ty Change

Copyright (C) 2016 YANMAR GLOBAL CS CO., LTD. All RightsReserved.

Fig.14. FUEL PIPE

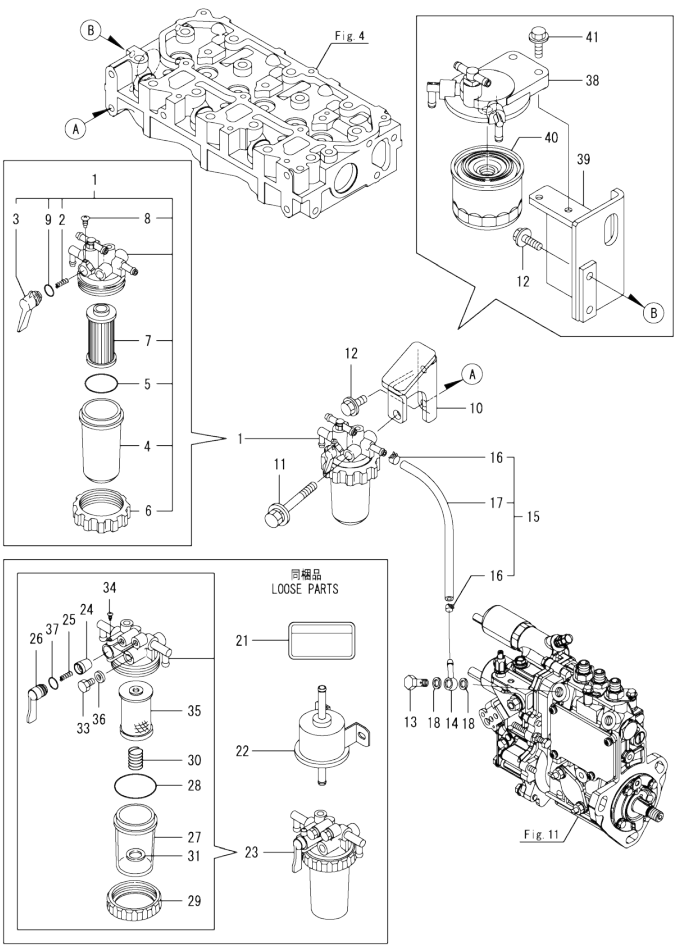

(A)=3TNV80F-SPSU
(B)=
(C)=
(D)=
(E)=
(F)=

No.	Lev.	Parts No.	Description	Q'ty (A)	(B)	(C)	(D)	(E)	(F)	I	R
1	1	119740-55601	STRAINER ASSY, FUEL	1						Z	
	(A=E11107)										
2	2	104200-55330	SPRING, FUEL VALVE	1						Z	
	(A=E11107)										
3	2	119810-55340	LEVER, FUEL	1						Z	
	(A=E11107)										
4	2	121254-55510	CUP, FUEL STARINER	1						Z	
	(A=E11107)										
5	2	102103-55520	O-RING, FILTER	1						Z	
	(A=E11107)										
6	2	110250-55610	RING, CUP RETAINING	1						Z	
	(A=E11107)										
7	2	119810-55650	ELEMENT, FUEL FILTER	1						Z	
	(A=E11107)										
8	2	104200-55750	SCREW, M4	1						Z	
	(A=E11107)										
9	2	24311-240100	O-RING, 1AP10A	1						Z	
	(A=E11107)										
10	1	119E40-55650	BRACKET, FILTER	1						Z	
	(A=E11107)										
11	1	26014-080702	BOLT, M8X 70	1						Z	
	(A=E11107)										
12	1	26106-080162	BOLT, M8X 16 PLATED	2							
13	1	103854-39140	BOLT, PIPE JOINT	1							
14	1	101304-59020	JOINT, PIPE 12	1							
15	1	129210-59040	HOSE ASSY, FUEL L180	1							
15-1	1	129210-59080	HOSE ASSY, FUEL L270	1						N	
	(A=E11107)										
16	2	124766-59050	CLAMP, HOSE 11.5	2							
17	2	129555-59510	HOSE, D13/7.5X180	1							
17-1	2	129136-59110	HOSE, D13/7.5X270	1						N	
	(A=E11107)										
18	1	22190-120002	WASHER, SEAL 12	2							
21	1	114110-07761	LABEL, FUEL CAUTION	1							
22	1	119225-52102	PUMP, FUEL FEED	1							
22-1	1	129612-52100	PUMP, FUEL FEED	1						N	
	(A=E11107)										
23	1	129335-55701	SEPARATOR ASSY,WATER	1							
24	2	104200-55321	VALVE, TAPER	1							
25	2	104200-55330	SPRING, FUEL VALVE	1							
26	2	104200-55341	HANDLE, COCK	1							
27	2	124064-55510	CUP, FUEL STARINER	1							
28	2	102103-55520	O-RING, FILTER	1							
29	2	110250-55610	RING, CUP RETAINING	1							
30	2	121257-55720	SPRING, ELEMENT	1							
31	2	121257-55731	FLOAT	1							
33	2	101720-55750	PLUG, HEXAGON M6	2							
34	2	104200-55750	SCREW, M4	1							
35	2	171081-55910	FILTER, FUEL 100M	1							
36	2	23418-060000	GASKET, 6X1.0	2							
37	2	24311-240100	O-RING, 1AP10A	1							

N:Old ←Yes/No→ New. Q:Old ←No/Yes→ New. R:Old ←Yes/Yes→ New. S:Old ←No/No→ New. W:Add. Z:Discontinued. F:Interchangeable by set. K:Q'ty Change

++ CONTINUE ++

Copyright (C) 2016 YANMAR GLOBAL CS CO., LTD. All RightsReserved.

Fig.14. FUEL PIPE

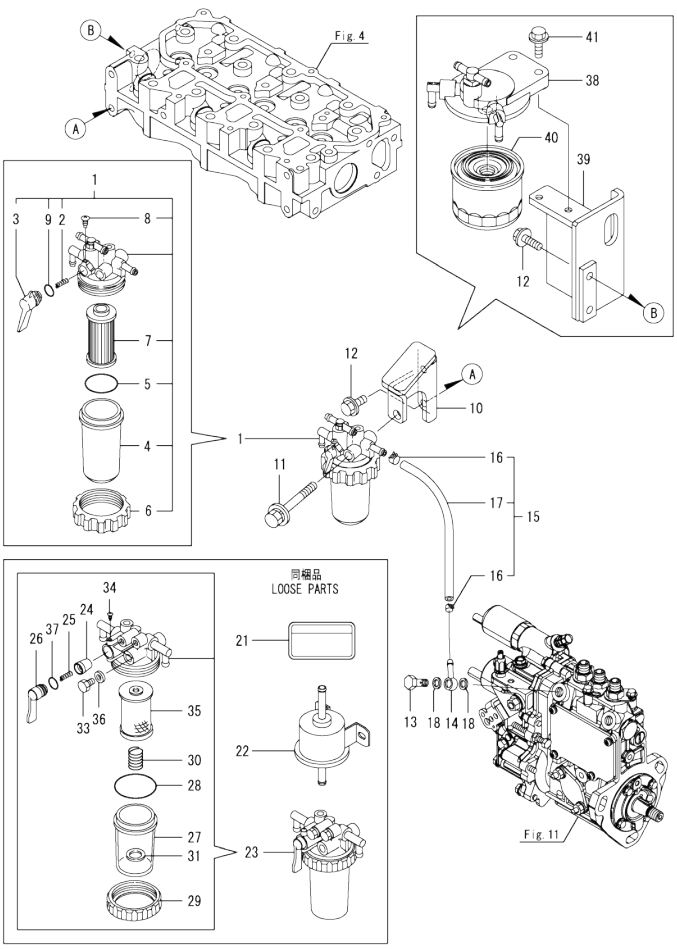

(A)=3TNV80F-SPSU (D)=
(B)= (E)=
(C)= (F)=

No.	Lev.	Parts No.	Description	Q'ty (A)	(B)	(C)	(D)	(E)	(F)	I	R
38	1	119934-55611	BRACKET, FILTER	1						W	
	(A=E11107)										
39	1	119540-55651	BRACKET, FILTER	1						W	
	(A=E11107)										
40	1	119802-55801	FILTER, FUEL	1						W	
	(A=E11107)										
41	1	26106-080302	BOLT, M8X 30 PLATED	2						W	
	(A=E11107)										

N:Old ←Yes/No→ New. Q:Old ←No/Yes→ New. R:Old ←Yes/Yes→ New. S:Old ←No/No→ New. W:Add. Z:Discontinued. F:Interchangeable by set. K:Q'ty Change

Copyright (C) 2016 YANMAR GLOBAL CS CO., LTD. All RightsReserved.

Fig.15. STARTER MOTOR

(A)=3TNV80F-SPSU
(B)=
(C)=
(D)=
(E)=
(F)=

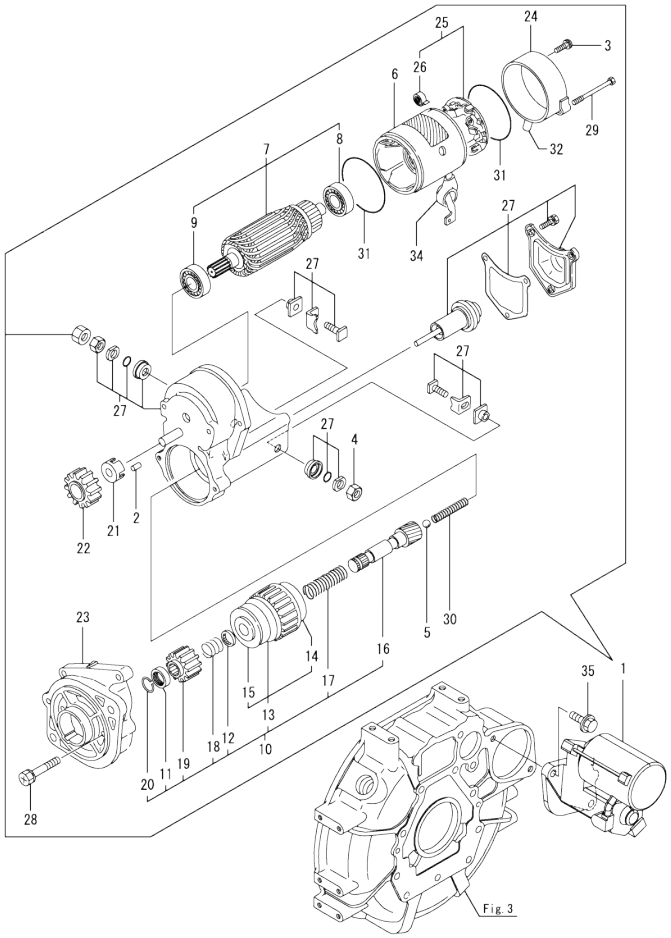

No.	Lev.	Parts No.	Description	Q'ty (A)	(B)	(C)	(D)	(E)	(F)	I	R
1	1	119740-77020	STARTER	1							
2	2	X0283060061	ROLLER	5							
3	2	129129-77460	SCREW	2							
4	2	X9490561370	NUT	1							
5	2	X9491200240	BALL, STEEL	1							
6	2	129407-77210	YOKE ASSY	1							
7	2	129407-77220	ARMATURE ASSY	1							
8	3	129129-77230	BEARING, BALL	1							
9	3	129129-77240	BEARING, BALL	1							
10	2	X1280996680	STARTER KIT	1							
11	3	X0280210230	NUT	1							
12	3	X0283270140	RETAINER	1							
13	3	129129-77390	CLUTCH ASSY	1							
14	4	129129-77440	BEARING, BALL	1							
15	4	129129-77450	BEARING, BALL	1							
16	3	129129-77400	SHAFT, STATER	1							
17	3	129129-77410	SPRING	1							
18	3	129407-77410	SPRING	1							
19	3	X0283712350	PINION, STARTER	1							
20	3	129129-77430	RING, SNAP	1							
21	2	129129-77260	RETAINER	1							
22	2	129129-77270	PINION	1							
23	2	X4284003310	HOUSING	1							
24	2	129407-77290	COVER	1							
25	2	129407-77300	HOLDER ASSY	1							
26	3	X9491730461	SPRING	4							
27	2	X1534004151	SWITCH ASSY	1							
28	2	129129-77320	BOLT	2							
29	2	129407-77330	BOLT	2							
30	2	129129-77340	SPRING	1							
31	2	129129-77350	O-RING	2							
32	2	129129-77362	COVER	1							
34	2	129129-77380	CAP	1							
35	1	26106-100252	BOLT, M10X 25 PLATED	2							

N:Old ←Yes/No→ New. Q:Old ←No/Yes→ New. R:Old ←Yes/Yes→ New. S:Old ←No/No→ New. W:Add. Z:Discontinued. F:Interchangeable by set. K:Q'ty Change

Copyright (C) 2016 YANMAR GLOBAL CS CO., LTD. All RightsReserved.

Fig.16. GENERATOR

(A)=3TNV80F-SPSU
(B)=
(C)=
(D)=
(E)=
(F)=

No.	Lev.	Parts No.	Description	Q'ty (A)	(B)	(C)	(D)	(E)	(F)	I	R
1	1	129423-77200	GENERATOR, 12V-40A	1							
2	2	X9490561001	NUT	1							
3	2	119620-77380	ROTOR ASSY	1							
4	3	123501-79240	BEARING, BALL	1							
5	3	119620-79250	COVER, BEARING	1							
6	2	119620-77421	FRAME ASSY, DRIVE	1							
7	3	119620-79200	BEARING, BALL	1							
8	3	119620-79210	PLATE, RETAINER	1							
9	3	119620-79220	SCREW	4							
10	3	119620-79230	STUD	2							
11	2	119620-77440	FRAME ASSY, REAR	1							
12	2	119620-77461	PULLEY, GENERATOR	1							
13	2	119620-77471	NUT	1							
14	2	119620-77490	COLLAR	1							
15	2	129423-77710	REGULATOR ASSY	1							
16	2	119620-79260	HOLDER ASSY	1							
17	2	129052-79270	HOLDER ASSY, BRUSH	1							
18	3	119620-77480	BRUSH ASSY, SUB	2							
19	3	119620-79280	SPRING	2							
20	2	119620-79290	SCREW	6							
21	2	119620-79300	SCREW	1							
22	2	129240-79300	COVER	1							
23	2	119620-79310	BOLT	3							
24	2	119620-79320	SCREW, W/WASHER	2							
25	2	119620-79330	BOLT	2							
26	2	119620-79340	BUSH, INSULATION	1							
27	2	119620-79350	NUT	2							
28	2	119620-79360	WASHER, THRUST	1							
29	1	26106-100452	BOLT, M10X 45 PLATED	1							
30	1	119717-77330	ADJUSTER, BELT	1							
31	1	119810-77340	BOLT, ADJUSTER L=30	1							
32	1	26106-080202	BOLT, M8X 20 PLATED	1							
33	1	119643-66900	DIODE	1						Z	1
	(A=E68792)										
34	1	119C10-77600	DRIVER, SOLENOID	1							1
35	1	119650-77911	RELAY ASSY, GLOW	2							1
38	1	129155-77925	TIMER, SECTION 4	1						Z	1
	(A=E68792)										
39	1	129211-77920	TIMER, SECTION 1	1							1
41	1	119802-77200	RELAY, SAFETY	1						W	1
	(A=E11107)										

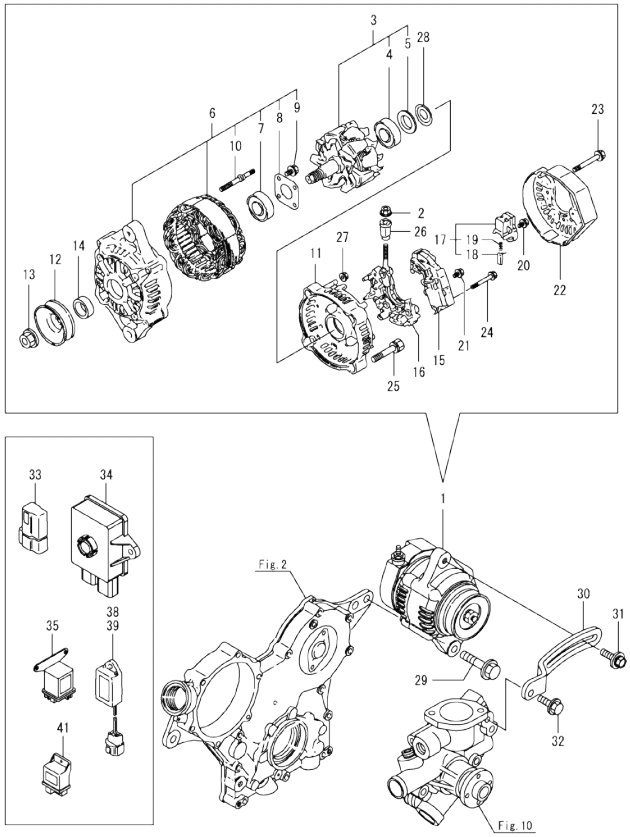

Remarks
(1)Loose parts.

N:Old $\frac{\text{Yes}}{\text{No}}$ New. Q:Old $\frac{\text{No}}{\text{Yes}}$ New. R:Old $\frac{\text{Yes}}{\text{Yes}}$ New. S:Old $\frac{\text{No}}{\text{No}}$ New. W:Add. Z:Discontinued. F:Interchangeable by set. K:Q'ty Change

Copyright (C) 2016 YANMAR GLOBAL CS CO., LTD. All RightsReserved.

Fig.17. GASKET SET

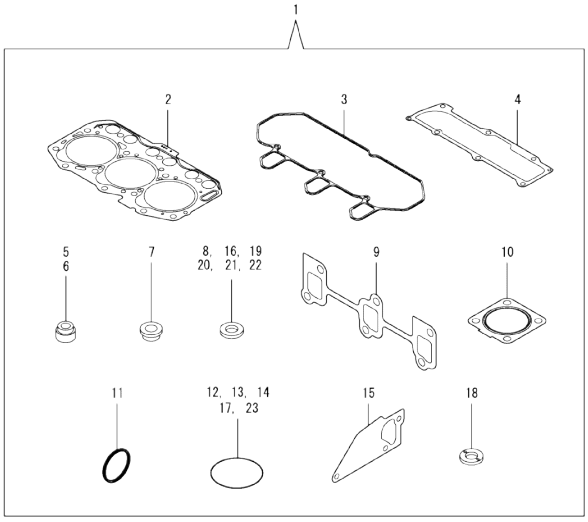

Remarks
(1)Optional parts.

(A)=3TNV80F-SPSU
(B)=
(C)=
(D)=
(E)=
(F)=

No.	Lev.	Parts No.	Description	Q'ty (A)	(B)	(C)	(D)	(E)	(F)	I	R
1	1	119E40-92610	PACKING	1							1
2	2	119E10-01330	GASKET SET, HEAD	1							
3	2	119718-11310	GASKET, BONNET	1							
4	2	119717-11331	GASKET	1							
5	2	119717-11340	SEAL, VALVE STEM	3							
6	2	119717-11350	SEAL, VALVE STEM	3							
7	2	129901-11450	PROTECTOR, NOZZLE	3							
8	2	119600-11460	GASKET, NOZZLE	6							
9	2	119717-13110	GASKET, EXH.MANIFOLD	1							
10	2	119515-13200	GASKET, SILENCER	1							
11	2	119C10-21930	GASKET, WASHER	1							
12	2	119624-32040	O-RING, P12.0	1							
13	2	119717-32050	O-RING, P17.0	3							
14	2	119717-32060	O-RING, P15.0	1							
15	2	119717-42020	GASKET, WATER PUMP	1							
16	2	124465-44950	GASKET, 16	2							
17	2	121850-51960	O-RING	1							
18	2	129901-59560	GASKET	3							
19	2	22190-080002	WASHER, SEAL 8	4							
20	2	22190-120002	WASHER, SEAL 12	4							
21	2	22190-160002	WASHER, SEAL 16	1							
22	2	23414-080000	GASKET, 8X1.0	1							
23	2	24311-000320	O-RING, 1AP32.0	2							

N:Old ←Yes/No→ New. Q:Old ←No/Yes→ New, R:Old ←Yes/Yes→ New. S:Old ←No/No→ New. W:Add. Z:Discontinued. F:Interchangeable by set. K:Q'ty Change

Copyright (C) 2016 YANMAR GLOBAL CS CO., LTD. All RightsReserved.

Parts No. Index

Parts No.	Fig. No.	Ref. No.
101304-59020	14	14
101720-55750	14	33
102103-55520	14	5
		28
103854-39140	14	13
104200-55321	14	24
104200-55330	14	2
		25
104200-55341	14	26
104200-55750	14	8
		34
105010-11490	4	3
105025-59760	13	34
105027-12580	5	5
105225-59511	13	34 -1
105311-01090	1	4
105425-01690	3	9
110250-55610	14	6
		29
114110-07761	14	21
114250-39450	9	11
119131-18320	6	6
119140-12680	5	7
119225-52102	14	22
119226-07900	4	54
		54 -1
119233-12700	5	8
119285-01990	1	6
119285-11990	4	11
119305-35151	9	17
119336-12570	5	4
119515-13200	6	8
	17	10
119515-59581	13	46
119515-61440	12	13
119540-12520	5	1
119540-55651	14	39
119540-59570	13	41 -1
119600-11460	4	2
	17	8
119620-01750	3	3
119620-02020	1	7
119620-11280	4	26
119620-14200	7	1
119620-59700	13	47
119620-77380	16	3
119620-77421	16	6
119620-77440	16	11
119620-77461	16	12
119620-77471	16	13

Parts No.	Fig. No.	Ref. No.
119620-77480	16	18
119620-77490	16	14
119620-79200	16	7
119620-79210	16	8
119620-79220	16	9
119620-79230	16	10
119620-79250	16	5
119620-79260	16	16
119620-79280	16	19
119620-79290	16	20
119620-79300	16	21
119620-79310	16	23
119620-79320	16	24
119620-79330	16	25
119620-79340	16	26
119620-79350	16	27
119620-79360	16	28
119621-21681	8	12
119623-01250	1	5
119624-32040	2	18
	17	12
119643-66900	16	33
119650-77911	16	35
119655-12560	5	3
119660-01911	2	17
119660-61901	12	62
119717-01501	2	1
119717-01521	2	5
119717-01570	2	2
119717-01601	3	2
119717-01720	3	7
119717-01750	2	16
119717-01800	2	7
119717-02411	1	10
119717-02930	1	23
119717-03031	4	36
119717-03070	4	37
		38
119717-11131	4	15
119717-11190	4	17
119717-11200	4	21
119717-11240	4	22
119717-11260	4	25
119717-11320	4	46
119717-11331	4	47
	17	4
119717-11340	4	18
	17	5
119717-11350	4	19
	17	6

Parts No.	Fig. No.	Ref. No.
119717-11381	4	35
119717-11650	4	27
119717-11800	4	58
119717-13110	6	2
	17	9
119717-13600	6	3
119717-14400	7	2
119717-14581	7	3
119717-21200	8	4
119717-23200	8	27
119717-23601	8	28
119717-23611	8	31
119717-23910	8	30
119717-25050	7	9
119717-25101	7	10
119717-25911	7	16
119717-25930	7	15
119717-32050	2	19
	17	13
119717-32060	9	5
	17	14
119717-32080	2	9
119717-32100	2	8
119717-32110	2	13
119717-32120	2	14
119717-34801	9	1
119717-35080	9	6
119717-35140	9	3
119717-39210	9	12
119717-42020	10	13
	17	15
119717-42031	10	3
119717-42041	10	4
119717-44740	10	19
119717-49800	10	23
119717-51150	7	17
119717-51420	11	67
119717-51711	11	92
119717-51750	11	93
119717-51761	11	94
119717-51860	11	108
119717-51930	12	2
119717-59510	13	35
119717-61050	12	3
119717-61060	12	94
119717-61070	12	4
119717-77330	16	30
119717-77801	4	56
119717-77820	4	57
119718-11310	4	45

Parts No.	Fig. No.	Ref. No.
119718-11310	17	3
119734-01590	2	3
119734-02220	3	4 -1
119740-01770	3	8
119740-13100	6	1
119740-42350	10	17
119740-42370	10	18 -1
119740-55601	14	1
119740-77020	15	1
119744-59560	13	41
119802-03100	4	39
119802-03110	4	40
119802-03121	4	41
119802-03131	4	42
119802-03141	4	43
119802-32130	2	15
119802-55801	14	40
119802-77200	16	41
119808-12540	5	2
119810-01200	1	26
119810-02941	1	34
119810-55340	14	3
119810-55650	14	7
119810-77340	16	31
119813-59950	13	48
119840-59570	13	46 -1
119865-21600	8	10
119934-55611	14	38
119C00-61900	12	80
119C00-61901	12	80 -1
119C10-21650	8	11
119C10-21930	8	13
	17	11
119C10-21940	8	14
119C10-42320	10	9
119C10-51250	11	114
119C10-53000	13	1
119C10-53010	13	3
119C10-77600	16	34
119E00-01560	1	1
119E10-01330	1	27
	17	2
119E10-11100	4	13
119E10-11110	4	14
119E10-11740	4	4
119E10-21590	8	8
119E10-21700	8	1
119E10-22080	8	16
119E10-22300	8	22
119E10-22500	8	18

Parts No. Index

Parts No.	Fig. No.	Ref. No.
119E10-22550	8	34
119E10-22900	8	33
119E10-23000	8	24
119E10-42000	10	1
119E10-51250	11	114 -1
119E10-59810	13	20
119E10-59820	13	24
119E10-59830	13	28
119E40-55650	14	10
119E40-92610	17	1
121111-21501	8	7
121250-44901	10	27
121254-55510	14	4
121257-55720	14	30
121257-55731	14	31
121450-42450	10	26
121520-34810	9	2
121850-51960	2	20
	17	17
122710-51090	11	8
123501-79240	16	4
124060-01050	1	11
124064-55510	14	27
124066-59100	13	42
124085-02220	3	4
124160-01751	2	28
	4	34
124160-01910	1	12
124465-44950	10	28
		29
	17	16
124574-44761	10	20
124766-59050	13	33
	14	16
129001-32320	2	11
129001-32330	2	12
129005-59830	9	13
129052-79270	16	17
129100-01580	3	1
	8	2
129100-52200	11	112
129129-77230	15	8
129129-77240	15	9
129129-77260	15	21
129129-77270	15	22
129129-77320	15	28
129129-77340	15	30
129129-77350	15	31
129129-77362	15	32
129129-77380	15	34

Parts No.	Fig. No.	Ref. No.
129129-77390	15	13
129129-77400	15	16
129129-77410	15	17
129129-77430	15	20
129129-77440	15	14
129129-77450	15	15
129129-77460	15	3
129136-59110	14	17 -1
129150-11230	4	28
129150-11750	4	30
129150-25301	7	14
129150-59120	13	15
129150-59131	13	18
129155-51020	11	4
129155-51280	11	57
		58
	12	6
129155-51400	11	65
129155-51580	11	89
129155-51701	11	91
129155-52051	11	111
129155-61460	12	79
129155-77925	16	38
129210-59040	14	15
129210-59070	13	32
129210-59080	14	15 -1
129210-59170	13	32 -1
129211-77920	16	39
129240-79300	16	22
129335-55701	14	23
129350-49530	10	22
129407-77210	15	6
129407-77220	15	7
129407-77290	15	24
129407-77300	15	25
129407-77330	15	29
129407-77410	15	18
129423-77200	16	1
129423-77710	16	15
129508-11180	4	16
129555-59510	14	17
129612-12650	5	6
129612-52100	14	22 -1
129630-77900	12	128
129900-32130	2	10
129901-11450	4	1
	17	7
129901-53800	13	4
129901-59560	13	45
	17	18

Parts No.	Fig. No.	Ref. No.
129916-49740	10	10
129927-44900	10	27 -1
129974-49350	10	30
129E00-13610	6	4
129E00-13630	6	5
158552-61900	12	83
158600-51270	11	56
158600-51410	11	66
158600-51420	11	68
158600-51570	11	88
158600-51790	11	95
171001-42290	10	18
171056-49120	10	25
171081-55910	14	35
22190-080002	9	14
		16
	17	19
22190-100002	12	86
22190-120002	10	31
	13	54
	14	18
	17	20
22190-160002	3	11
	11	97
	17	21
22217-120000	11	98
22242-000120	4	31
22252-000220	8	23
22351-050010	11	99
22351-060012	4	20
22372-040000	12	88
22512-040120	8	5
		15
22857-500100	4	48
		49
22857-500160	4	50
23414-080000	10	14
	17	22
23418-060000	14	36
23857-030000	9	15
23876-005000	4	12
23876-030000	2	6
24311-000320	2	29
	4	51
	17	23
24311-240100	14	9
		37
24357-240200	12	82
26014-080702	14	11
26022-050122	11	103

Parts No.	Fig. No.	Ref. No.
26106-060102	9	10
	12	67
		89
26106-060122	2	21
	7	8
26106-060142	11	115
	12	90
26106-060162	2	22
	11	115 -1
26106-060202	4	52
	10	21
	12	91
26106-060352	7	13
26106-060402	2	23
		24
26106-060452	12	92
26106-060602	2	25
26106-060652	2	26
26106-060752	4	53
26106-080122	3	12
	10	15
26106-080142	11	116
26106-080162	4	55
		55 -1
	11	116 -1
	14	12
26106-080202	10	24
	16	32
26106-080302	3	13
	14	41
26106-080402	4	33
26106-080452	3	14
26106-080502	3	15
	10	16
26106-100252	15	35
26106-100452	16	29
26206-100252	3	5
26206-100302	3	6
26306-080002	2	27
	6	7
26366-080002	12	68
26577-060122	10	11
26716-120002	11	105
26756-060002	12	93
26979-050162	4	32
27241-120000	1	13
27241-250000	10	12
719717-02901	1	28
719717-02911	1	31
719734-01500	2	4

Parts No. Index

Parts No.	Fig. No.	Ref. No.
719E40-51410	11	1
X0280210230	15	11
X0283060061	15	2
X0283270140	15	12
X0283712350	15	19
X1280996680	15	10
X1534004151	15	27
X4284003310	15	23
X9490561001	16	2
X9490561370	15	4
X9491200240	15	5
X9491730461	15	26

Parts No.	Fig. No.	Ref. No.

Parts No.	Fig. No.	Ref. No.

Parts No.	Fig. No.	Ref. No.