YANMAR

PARTS CATALOG

0CD50-M04470EN

Last update May., 2021

PREFACE

This parts catalog is the 1st edition of 3TNV80F-SPSY2 for SANY.

Published : January, 2019

Contents

0CD50-M04470

Fig. No.	Fig. Name
ENGINE	
1.	CYLINDER BLOCK
2.	GEAR HOUSING
3.	FLYWHEEL HOUSING & OIL SUMP
4.	CYLINDER HEAD & BONNET
5.	EXHAUST MANIFOLD
6.	CAMSHAFT & DRIVING GEAR
7.	CRANKSHAFT & PISTON
8.	LUB. OIL SYSTEM
9.	COOLING WATER SYSTEM
10.	FUEL INJECTION PUMP
11.	GOVERNOR
12.	FUEL INJECTION VALVE
13.	FUEL PIPE
14.	STARTER MOTOR
15.	GENERATOR
16.	ACCESSORY
17.	GASKET SET

Fig.1. CYLINDER BLOCK

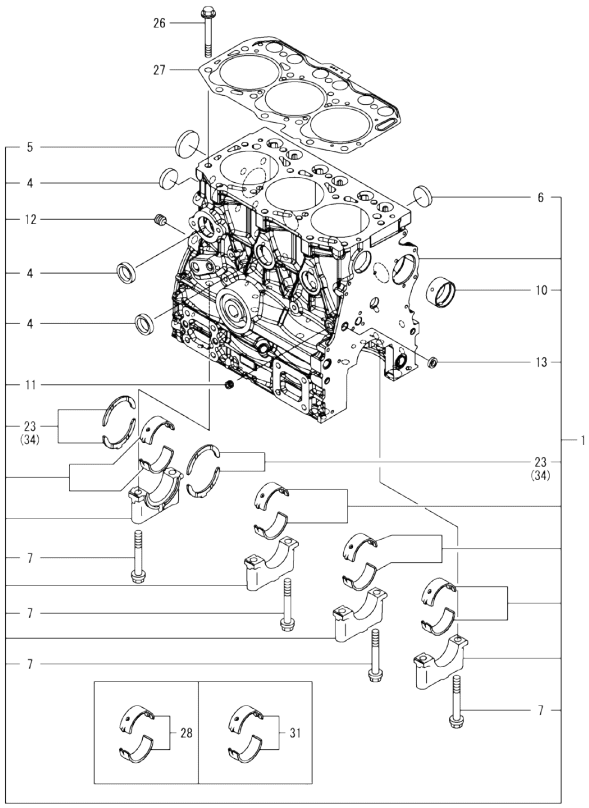

Remarks
(1)Spare parts.
(2)Under-sized(U.S.=0.25) parts.
(3)Over-sized(O.S.=0.25) parts.

(A)=3TNV80F-SPSY2
(B)=
(C)=
(D)=
(E)=
(F)=

No.	Lev.	Parts No.	Description	Q'ty (A)	(B)	(C)	(D)	(E)	(F)	I	R
1	1	119E00-01560	BLOCK ASSY, CYLINDER	1							
4	2	105311-01090	PLUG, 30	4							
5	2	119623-01250	PLUG, 45	1							
6	2	119285-01990	PLUG, 25	3							
7	2	119620-02020	BOLT, METAL CAP	8							
10	2	119717-02411	BUSH, CAMSHAFT	1							
11	2	124060-01050	PLUG, PT1/8	1							
12	2	124160-01910	PLUG, PT1/4	1							
13	2	27241-120000	PLUG, 12	1							
23	2	119717-02930	METAL ASSY, THRUST	2							
26	1	119810-01200	BOLT, CYLINDER HEAD	14							
27	1	119E10-01330	GASKET SET, HEAD	1							
28	1	719717-02901	METAL ASSY, MAIN	4							1
31	1	719717-02911	METAL ASSY, MAIN .25	4							2
34	1	119810-02941	METAL ASSY, 0.25 OS	2							3

N:Old ←Yes/No→ New. Q:Old ←No/Yes→ New. R:Old ←Yes/Yes→ New. S:Old ←No/No→ New. W:Add. Z:Discontinued. F:Interchangeable by set. K:Q'ty Change

Copyright (C) 2019 YANMAR GLOBAL CS CO., LTD. All RightsReserved.

Fig.2. GEAR HOUSING

(A)=3TNV80F-SPSY2
(B)=
(C)=
(D)=
(E)=
(F)=

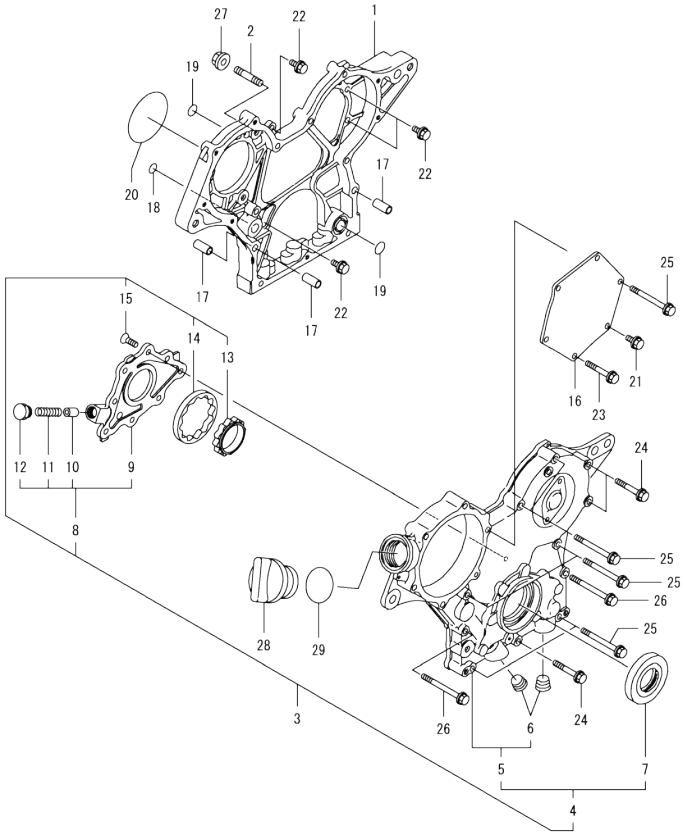

No.	Lev.	Parts No.	Description	Q'ty (A)	(B)	(C)	(D)	(E)	(F)	I	R
1	1	119717-01501	CASE, GEAR	1							
2	1	119717-01570	STUD	3							
3	1	119734-01590	COVER ASSY, CASE	1							
4	2	719734-01500	COVER ASSY, CASE	1							
5	3	119717-01521	COVER, GEAR CASE	1							
6	4	23876-030000	PLUG, R03	2							
7	3	119717-01800	SEAL, OIL	1							
8	2	119717-32100	COVER ASSY, PUMP	1							
9	3	119717-32080	COVER, OIL PUMP	1							
10	3	129900-32130	VALVE, RELIEF	1							
11	3	129001-32320	SPRING	1							
12	3	129001-32330	PLUG	1							
13	2	119717-32110	ROTOR, INNER	1							
14	2	119717-32120	ROTOR, OUTER	1							
15	2	119802-32130	SCREW, M6X16	8							
16	1	119717-01750	COVER, PUMP	1							
17	1	119660-01911	PIPE, KNOCK 6X17	4							
18	1	119624-32040	O-RING, P12.0	1							
19	1	119717-32050	O-RING, P17.0	3							
20	1	121850-51960	O-RING, FUEL PUMP	1							
21	1	26106-060122	BOLT, M6X 12 PLATED	1							
22	1	26106-060162	BOLT, M6X 16 PLATED	4							
23	1	26106-060402	BOLT, M6X 40 PLATED	4							
24	1	26106-060402	BOLT, M6X 40 PLATED	3							
25	1	26106-060602	BOLT, M6X 60 PLATED	7							
26	1	26106-060652	BOLT, M6X 65 PLATED	2							
27	1	26306-080002	NUT, M8	3							
28	1	124160-01751	CAP, FILLER	1							
29	1	24311-000320	O-RING, 1AP32.0	1							

N:Old ←Yes/No→ New. Q:Old ←No/Yes→ New. R:Old ←Yes/Yes→ New. S:Old ←No/No→ New. W:Add. Z:Discontinued. F:Interchangeable by set. K:Q'ty Change

Copyright (C) 2019 YANMAR GLOBAL CS CO., LTD. All RightsReserved.

Fig.3. FLYWHEEL HOUSING & OIL SUMP

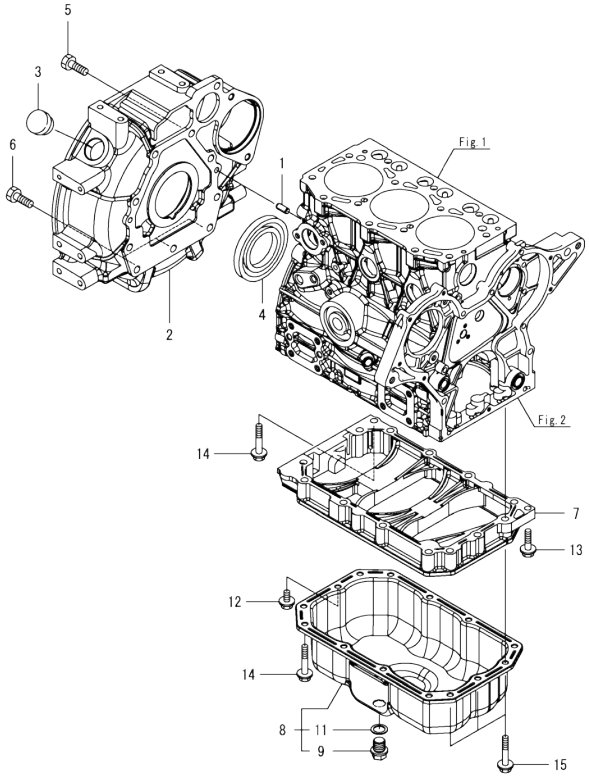

(A)=3TNV80F-SPSY2
(B)=
(C)=
(D)=
(E)=
(F)=

No.	Lev.	Parts No.	Description	Q'ty (A)	(B)	(C)	(D)	(E)	(F)	I	R
1	1	129100-01580	PIN, PARALLEL 8X16	2							
2	1	119515-01601	HOUSING, FLYWHEEL	1							
3	1	119620-01750	CAP, WHEEL COVER	1							
4	1	119734-02220	SEAL, OIL WHEEL SIDE	1							
5	1	26206-100252	BOLT, M10X 25 PLATED	7							
6	1	26206-100302	BOLT, M10X 30 PLATED	3							
7	1	119717-01720	SPACER, OIL PAN	1							
8	1	119740-01770	OIL PAN ASSY	1							
9	2	105425-01690	PLUG, DRAIN M16	1							
11	2	22190-160002	WASHER, SEAL 16	1							
12	1	26106-080122	BOLT, M8X 12 PLATED	1							
13	1	26106-080302	BOLT, M8X 30 PLATED	1							
14	1	26106-080452	BOLT, M8X 45 PLATED	11							
15	1	26106-080502	BOLT, M8X 50 PLATED	3							

N:Old ◄Yes/No► New. Q:Old ◄No/Yes► New. R:Old ◄Yes/Yes► New. S:Old ◄No/No► New. W:Add. Z:Discontinued. F:Interchangeable by set. K:Q'ty Change

Copyright (C) 2019 YANMAR GLOBAL CS CO., LTD. All RightsReserved.

Fig.4. CYLINDER HEAD & BONNET

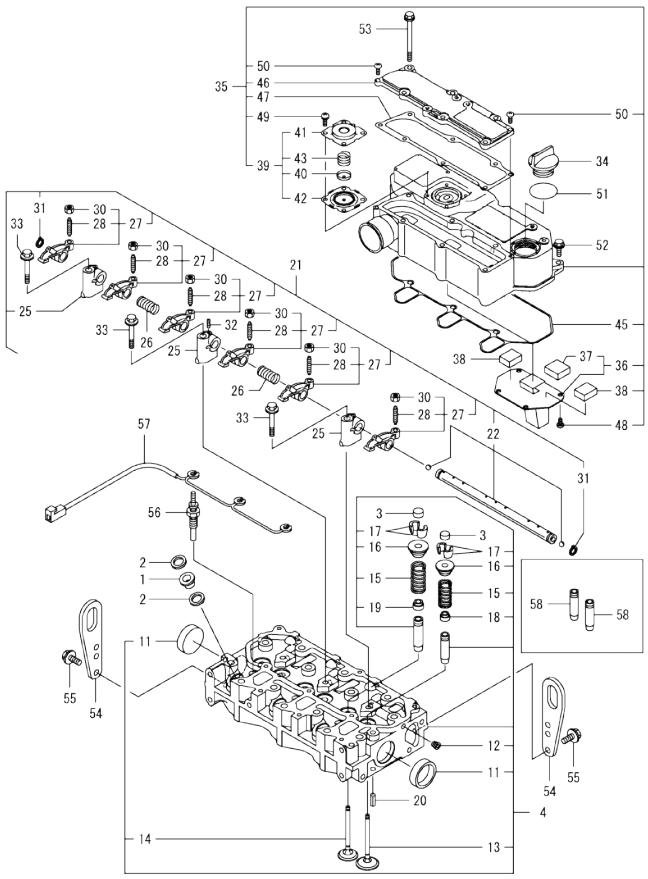

(A)=3TNV80F-SPSY2
(B)=
(C)=
(D)=
(E)=
(F)=

No.	Lev.	Parts No.	Description	Q'ty (A)	(B)	(C)	(D)	(E)	(F)	I	R
1	1	129901-11450	PROTECTOR, NOZZLE	3							
2	1	119600-11460	GASKET, NOZZLE	6							
3	1	105010-11490	CAP, VALVE	6							
4	1	119E10-11740	HEAD ASSY, CYLINDER	1							
11	2	119285-11990	PLUG, 35	2							
12	2	23876-005000	PLUG, R005	1							
13	2	119E10-11100	VALVE, INTAKE	3							
14	2	119E10-11110	VALVE, EXHAUST	3							
15	2	119717-11131	SPRING, VALVE	6							
16	2	129508-11180	RETAINER, SPRING	6							
17	2	119717-11190	COTTER, VALVE	12							
18	2	119717-11340	SEAL, VALVE STEM	3							
19	2	119717-11350	SEAL, VALVE STEM	3							
20	1	22351-060012	PIN, SPRING 6.0X12	2							
21	1	119717-11200	SUPPORT ASSY, ROCKER	1							
22	2	119717-11240	SHAFT ASSY, ARM	1							
25	2	119717-11260	SUPPORT, ROCKER ARM	3							
26	2	119620-11280	SPRING, SHAFT	2							
27	2	119717-11650	ARM ASSY, ROCKER INT	6							
28	3	129150-11230	SCREW, VALVE ADJUST	6							
30	3	129150-11750	NUT, M8XP1.0	6							
31	2	22242-000120	RING, 12	2							
32	2	26979-050162	SCREW, M5X16	1							
33	1	26106-080402	BOLT, M8X 40 PLATED	3							
34	1	124160-01751	CAP, FILLER	1							
35	1	119717-11381	BONNET ASSY, HEAD	1							
36	2	119717-03031	PLATE, BAFFLE	1							
37	3	119717-03070	BAFFLE, BREATHER	1							
38	2	119717-03070	BAFFLE, BREATHER	2							
39	2	119802-03100	DIAPHRAGM ASSY	1							
40	3	119802-03110	PLATE, DIAPHRAGM	1							
41	3	119802-03121	COVER, DIAPHRAGM	1							
42	3	119802-03131	DIAPHRAGM, BREATHER	1							
43	3	119802-03141	SPRING, DIAPHRAGM	1							
45	2	119718-11310	GASKET, BONNET	1							
46	2	119717-11320	COVER, BONNET	1							
47	2	119717-11331	GASKET, BONNET COVER	1							
48	2	22857-500100	SCREW, 5X10	4							
49	2	22857-500100	SCREW, 5X10	4							
50	2	22857-500160	SCREW, 5X16	2							
51	1	24311-000320	O-RING, 1AP32.0	1							
52	1	26106-060202	BOLT, M6X 20 PLATED	3							
53	1	26106-060752	BOLT, M6X 75 PLATED	6							
54	1	119226-07900	LIFTER, ENGINE	2							
55	1	26106-080162	BOLT, M8X 16 PLATED	4							
56	1	119717-77801	PLUG, GLOW	3							
57	1	119717-77820	CONNECTOR, GLOW PLUG	1							
58	1	119717-11800	GUIDE, VALVE	6							1

Remarks
(1)Spare parts.

N:Old $\frac{\text{Yes}}{\text{No}}$ New. Q:Old $\frac{\text{No}}{\text{Yes}}$ New. R:Old $\frac{\text{Yes}}{\text{Yes}}$ New. S:Old $\frac{\text{No}}{\text{No}}$ New. W:Add. Z:Discontinued. F:Interchangeable by set. K:Q'ty Change

Copyright (C) 2019 YANMAR GLOBAL CS CO., LTD. All RightsReserved.

Fig.5. EXHAUST MANIFOLD

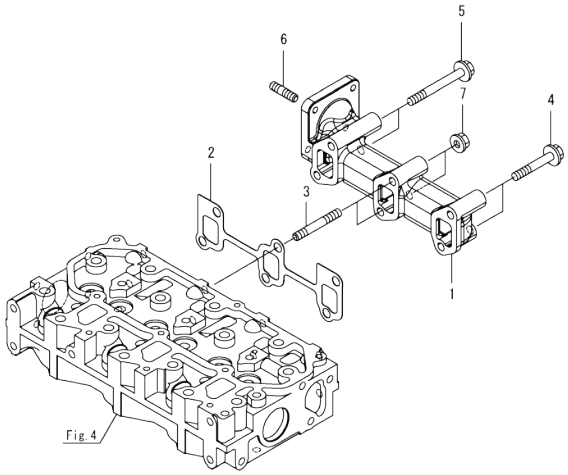

(A)=3TNV80F-SPSY2
(B)=
(C)=
(D)=
(E)=
(F)=

No.	Lev.	Parts No.	Description	Q'ty (A)	(B)	(C)	(D)	(E)	(F)	I	R
1	1	119740-13100	MANIFOLD, EXHAUST	1							
2	1	119717-13110	GASKET, MANIFOLD	1							
3	1	119717-13600	STUD, M8X50	2							
4	1	129E00-13610	BOLT, M8X50 10.9	2							
5	1	129E00-13630	BOLT, M8X71 10.9T	2							
6	1	119131-18320	STUD, M8X22	4							
7	1	26306-080002	NUT, M8	2							

N:Old ◄Yes/No► New. Q:Old ◄No/Yes► New. R:Old ◄Yes/Yes► New. S:Old ◄No/No► New. W:Add. Z:Discontinued. F:Interchangeable by set. K:Q'ty Change

Copyright (C) 2019 YANMAR GLOBAL CS CO., LTD. All RightsReserved.

Fig.6. CAMSHAFT & DRIVING GEAR

(A)=3TNV80F-SPSY2
(B)=
(C)=
(D)=
(E)=
(F)=

No.	Lev.	Parts No.	Description	Q'ty (A)	(B)	(C)	(D)	(E)	(F)	I	R
1	1	119620-14200	TAPPET	6							
2	1	119717-14400	ROD, PUSH	6							
3	1	119717-14581	CAMSHAFT ASSY	1							
8	1	26106-060122	BOLT, M6X 12 PLATED	2							
9	1	119717-25050	SHAFT, IDLE GEAR	1							
10	1	119717-25101	GEAR ASSY, IDLE	1							
13	1	26106-060352	BOLT, M6X 35 PLATED	3							
14	1	129150-25301	BOLT, INJECTION PUMP	4							
15	1	119717-25930	GEAR, PUMP	1							
16	1	119717-25911	BUSH, IDLE GEAR	1							1
17	1	119717-51150	FLANGE, CAMSHAFT	1							

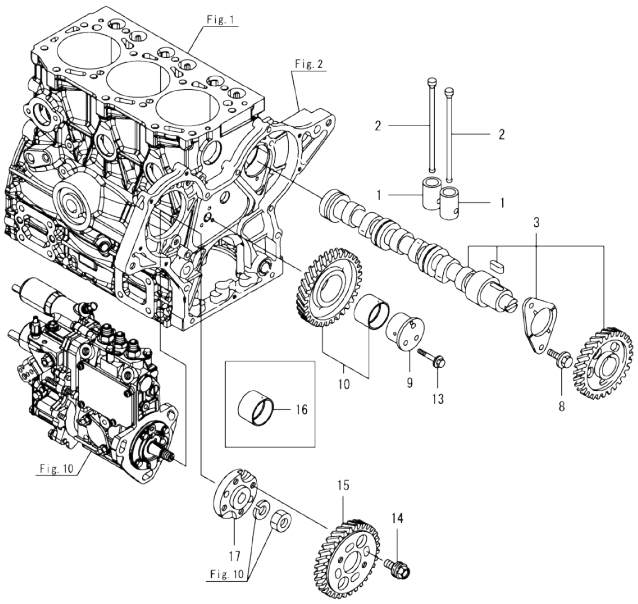

Remarks
(1)Spare parts.

N:Old ←Yes/No→ New. Q:Old ←No/Yes→ New. R:Old ←Yes/Yes→ New. S:Old ←No/No→ New. W:Add. Z:Discontinued. F:Interchangeable by set. K:Q'ty Change

Copyright (C) 2019 YANMAR GLOBAL CS CO., LTD. All RightsReserved.

Fig.7. CRANKSHAFT & PISTON

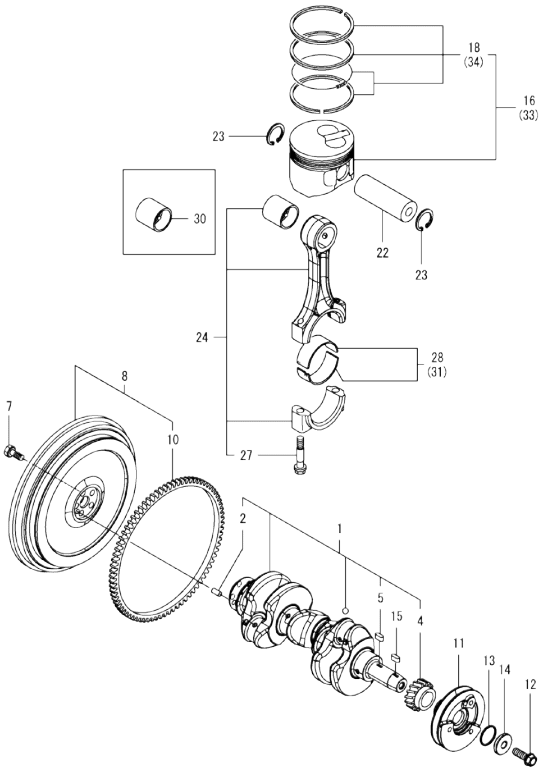

Remarks
(1)Spare parts.
(2)Under-sized(U.S.=0.25) parts.
(3)Over-sized(O.S.=0.25) parts.

(A)=3TNV80F-SPSY2
(B)=
(C)=
(D)=
(E)=
(F)=

No.	Lev.	Parts No.	Description	Q'ty (A)	(B)	(C)	(D)	(E)	(F)	I	R
1	1	119E10-21700	CRANKSHAFT ASSY	1							
2	2	129100-01580	PIN, PARALLEL 8X16	1							
4	2	119717-21200	GEAR, CRANKSHAFT	1							
5	2	22512-040120	KEY, 4X 12	1							
7	1	119620-21500	BOLT, FLYWHEEL	5							
8	1	119C10-21590	FLYWHEEL ASSY	1							
10	2	124950-21600	GEAR, RING Z=97	1							
11	1	119C10-21650	V-PULLEY, CRANKSHAFT	1							
12	1	119621-21681	BOLT, FLANGE 12X1.25	1							
13	1	119C10-21931	PACKING, WASHER	1							
14	1	119C10-21940	WASHER, V-PULLEY	1							
15	1	22512-040120	KEY, 4X 12	1							
16	1	119E11-22080	PISTON ASSY	3							
18	2	119E10-22500	RING SET, PISTON	3							
22	1	119E10-22300	PIN, PISTON	3							
23	1	22252-000220	RING, 22	6							
24	1	119E10-23001	ROD ASSY, CONNECTING	3							
27	2	119717-23200	BOLT, CONNECTING ROD	6							
28	1	119717-23601	METAL ASSY,CRANK PIN	3							
30	1	119717-23911	BUSH, PISTON PIN	3							1
31	1	119717-23611	METAL ASSY, PIN .25	3							2
33	1	119E11-22900	PISTON ASSY, 0.25 OS	3							3
34	2	119E10-22550	RING SET, PISTON .25	3							3

N:Old ←Yes/No→ New. Q:Old ←No/Yes→ New, R:Old ←Yes/Yes→ New, S:Old ←No/No→ New. W:Add. Z:Discontinued. F:Interchangeable by set. K:Q'ty Change

Copyright (C) 2019 YANMAR GLOBAL CS CO., LTD. All RightsReserved.

Fig.8. LUB. OIL SYSTEM

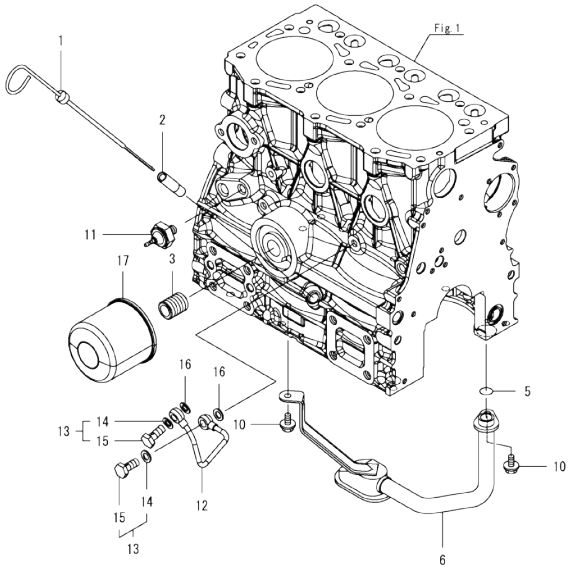

(A)=3TNV80F-SPSY2
(B)=
(C)=
(D)=
(E)=
(F)=

No.	Lev.	Parts No.	Description	Q'ty (A)	(B)	(C)	(D)	(E)	(F)	I	R
1	1	119717-34801	DIPSTICK, OIL	1							
2	1	121520-34810	GUIDE, DIPSTICK	1							
3	1	119717-35140	STUD	1							
5	1	119717-32060	O-RING, P15.0	1							
6	1	119717-35080	PIPE ASSY, OIL INLET	1							
10	1	26106-060102	BOLT, M6X 10 PLATED	2							
11	1	114250-39450	SWITCH, HYDRAULIC	1							
12	1	119717-39210	PIPE, PUMP	1							
13	1	129005-59830	BOLT ASSY, JOINT M8	2							
14	2	22190-080002	WASHER, SEAL 8	2							
15	2	23857-030000	BOLT, JOINT 3	2							
16	1	22190-080002	WASHER, SEAL 8	2							
17	1	119305-35151	FILTER ASSY, D68XL65	1							1

Remarks
(1)Spare parts.

N:Old ←Yes/No→ New. Q:Old ←No/Yes→ New. R:Old ←Yes/Yes→ New. S:Old ←No/No→ New. W:Add. Z:Discontinued. F:Interchangeable by set. K:Q'ty Change

Copyright (C) 2019 YANMAR GLOBAL CS CO., LTD. All RightsReserved.

Fig.9. COOLING WATER SYSTEM

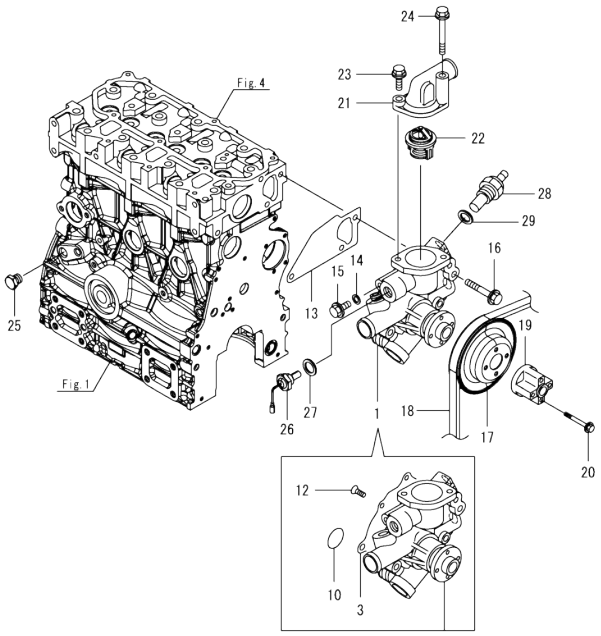

(A)=3TNV80F-SPSY2
(B)=
(C)=
(D)=
(E)=
(F)=

No.	Lev.	Parts No.	Description	Q'ty (A)	(B)	(C)	(D)	(E)	(F)	I	R
1	1	119E10-42001	PUMP ASSY, CW	1							
3	2	119717-42031	GASKET, WATER PUMP	1							
10	2	119C10-42320	O-RING, 2028	1							
12	2	26577-060122	SCREW, M6X12	4							
13	1	119717-42020	GASKET, WATER PUMP	1							
14	1	23414-080000	GASKET, 8X1.0	1							
15	1	26106-080122	BOLT, M8X 12 PLATED	1							
16	1	26106-080502	BOLT, M8X 50 PLATED	3							
17	1	119515-42350	V-PULLEY, PUMP D110	1							
18	1	129258-42290	V-BELT, A36.5	1							
19	1	119256-44760	SPACER, FAN	1							
20	1	26106-060552	BOLT, M6X 55 PLATED	4							
21	1	124101-49531	COVER, THERMOSTAT	1							
22	1	119717-49800	THERMOSTAT, 71C	1							
23	1	26106-080282	BOLT, M8X 28 PLATED	1							
24	1	26106-080652	BOLT, M8X 65 PLATED	1							
25	1	171056-49120	PLUG, DRAIN R1/4	1							
26	1	129107-44901	SENSOR, WATER TEMP.	1							
27	1	124465-44950	GASKET, 16	1							
28	1	124250-49351	SENSOR, WATER TEMP.	1							
29	1	129150-49360	GASKET, 10	1							

N:Old ←Yes/No→ New. Q:Old ←No/Yes→ New. R:Old ←Yes/Yes→ New. S:Old ←No/No→ New. W:Add. Z:Discontinued. F:Interchangeable by set. K:Q'ty Change

Copyright (C) 2019 YANMAR GLOBAL CS CO., LTD. All RightsReserved.

Fig.10. FUEL INJECTION PUMP

(A)=3TNV80F-SPSY2
(B)=
(C)=
(D)=
(E)=
(F)=

No.	Lev.	Parts No.	Description	Q'ty (A)	(B)	(C)	(D)	(E)	(F)	I	R
1	1	719E40-51450	FIE ASSY	1							1
4	2	129155-51020	STUD	2							
8	2	122710-51090	KEY, FEATHER	1							
56	2	158600-51270	STOPPER, TAPPET	3							
57	2	129155-51280	O-RING, S6	3							
58	2	129155-51280	O-RING, S6	1							
65	2	129155-51400	PROTECTOR	1							
66	2	158600-51410	PLUG, DEFLIFTER M12	1							
67	2	119717-51420	O-RING	1							
68	2	158600-51420	PLUG, DEFLIFTER M16	1							
88	2	158600-51570	PLUG, RACK	1							
89	2	129155-51580	O-RING	1							
91	2	129155-51701	COVER, PUMP BOTTOM	1							
92	2	119717-51711	GASKET, PUMP	1							
93	2	119717-51750	COVER, BODY SIDE	1							
94	2	119717-51761	GASKET, PUMP COVER	1							
95	2	158600-51790	STOPPER, RACK	1							
97	2	22190-160002	WASHER, SEAL 16	1							
98	2	22217-120000	WASHER, SPRING 12	1							
99	2	22351-050010	PIN, SPRING 5.0X10	2							
103	2	26022-050122	SCREW, M5X12	8							
105	2	26716-120002	NUT, M12	1							
108	2	119717-51860	NUT, M6	2							
111	2	129155-52051	GASKET, PUMP COVER	1							
112	2	129100-52200	COVER, FEED PUMP	1							
114	1	119E10-51250	SUPPORT	1							
115	1	26106-060162	BOLT, M6X 16 PLATED	1							
116	1	26106-080162	BOLT, M8X 16 PLATED	1							

Remarks
(1)Governor(Fig.11) is incorporated in this Fuel Injection Pump(No.1).

N:Old ←Yes/No→ New, Q:Old ←No/Yes→ New, R:Old ←Yes/Yes→ New, S:Old ←No/No→ New, W:Add, Z:Discontinued, F:Interchangeable by set, K:Q'ty Change

Copyright (C) 2019 YANMAR GLOBAL CS CO., LTD. All RightsReserved.

Fig.11. GOVERNOR

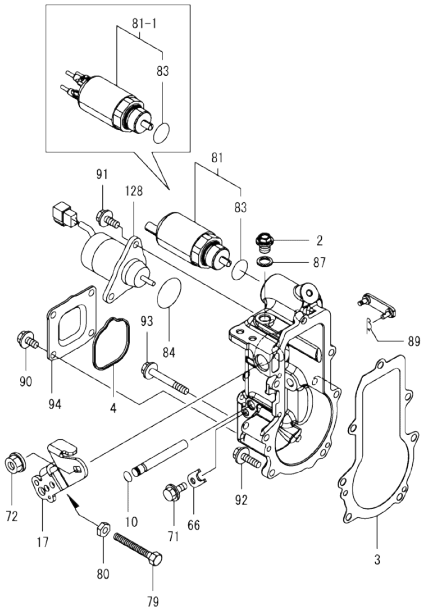

(A)=3TNV80F-SPSY2
(B)=
(C)=
(D)=
(E)=
(F)=

No.	Lev.	Parts No.	Description	Q'ty (A)	(B)	(C)	(D)	(E)	(F)	I	R
2	2	119717-51930	PLUG, M10	1							
3	2	119717-61050	GASKET, CASE	1							
4	2	119717-61070	GASKET, COVER	1							
10	2	129155-51280	O-RING, S6	1							
17	2	119515-61440	LEVER, CONTROL	1							
66	2	119660-61901	STOPPER, SHAFT	1							
71	2	26106-060102	BOLT, M6X 10 PLATED	1							
72	2	26366-080002	NUT, M8	1							
79	2	129155-61461	BOLT,IDLE LIMIT	1							
80	2	119740-61470	NUT	1							
81	2	119C00-61900	SOLENOID, CONTROL	1							
81-1	2	119C00-61901	SOLENOID, POWER CONT	1							R
	(A=E45137)										
83	3	24357-240200	PACKING, 24020	1							
84	2	158552-61900	O-RING	1							
87	2	22190-100002	WASHER, SEAL 10	1							
89	2	22372-040000	PIN, SNAP 4	1							
90	2	26106-060102	BOLT, M6X 10 PLATED	4							
91	2	26106-060142	BOLT, M6X 14 PLATED	2							
92	2	26106-060202	BOLT, M6X 20 PLATED	4							
93	2	26106-060452	BOLT, M6X 45 PLATED	3							
94	2	119717-61060	COVER, GOVERNOR CASE	1							
128	2	129630-77900	SOLENOID, STOP	1							

Remarks
* This figure(Governor) is incorporated in the Fuel Injection Pump(Fig.10).

N:Old ◄Yes/No► New. Q:Old ◄No/Yes► New, R:Old ◄Yes/Yes► New, S:Old ◄No/No► New. W:Add. Z:Discontinued. F:Interchangeable by set. K:Q'ty Change

Copyright (C) 2019 YANMAR GLOBAL CS CO., LTD. All RightsReserved.

Fig.12. FUEL INJECTION VALVE

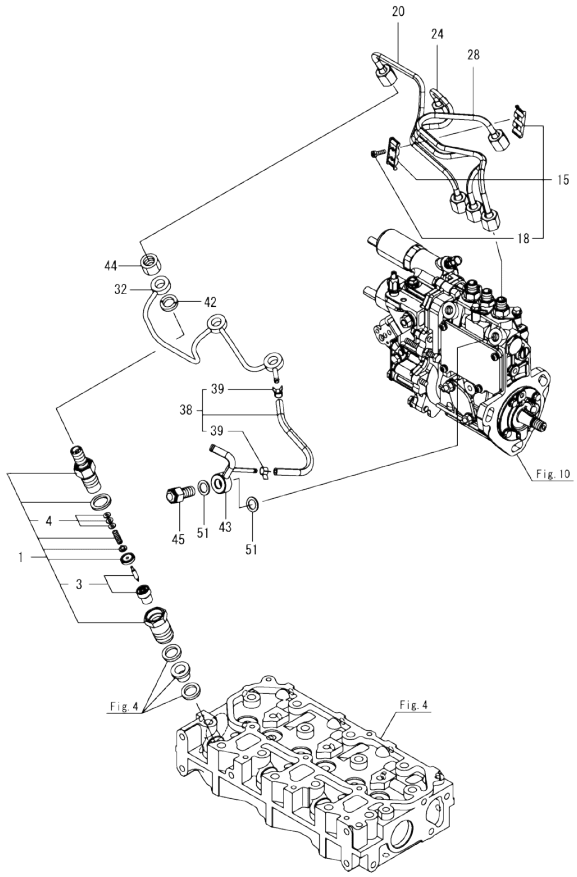

(A)=3TNV80F-SPSY2
(B)=
(C)=
(D)=
(E)=
(F)=

No.	Lev.	Parts No.	Description	Q'ty (A)	(B)	(C)	(D)	(E)	(F)	I	R
1	1	119C10-53000	VALVE ASSY,INJECTION	3							
3	2	119C10-53010	VALVE ASSY,INJECTION	3							
4	2	129901-53800	SHIM SET, ADJUSTING	3							1
15	1	129150-59120	RETAINER, PIPE	1							
18	2	129150-59131	BOLT, M4X14	2							
20	1	119E10-59810	PIPE ASSY, INJECTION	1							
24	1	119E10-59820	PIPE, INJECTION NO.2	1							
28	1	119E10-59830	PIPE, INJECTION NO.3	1							
32	1	119717-59510	PIPE ASSY, RETURN	1							
38	1	119744-59560	HOSE ASSY, RETURN	1							
39	2	124066-59100	CLAMP, HOSE 8	2							
42	1	129901-59560	GASKET, FUEL RETURN	3							
43	1	119515-59581	JOINT, OVERFLOW	1							
44	1	119620-59700	NUT, NOZZLE RETURN	3							
45	1	119813-59950	VALVE ASSY, CHECK	1							
51	1	22190-120002	WASHER, SEAL 12	2							

Remarks
(1)Spare parts.

N:Old ←Yes/No→ New. Q:Old ←No/Yes→ New. R:Old ←Yes/Yes→ New. S:Old ←No/No→ New. W:Add. Z:Discontinued. F:Interchangeable by set. K:Q'ty Change

Copyright (C) 2019 YANMAR GLOBAL CS CO., LTD. All RightsReserved.

Fig.13. FUEL PIPE

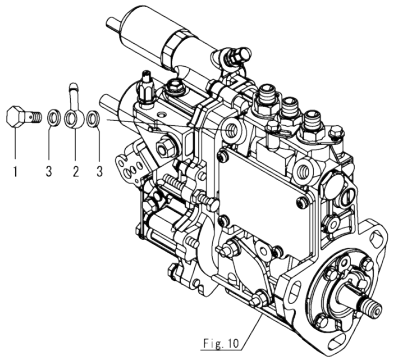

(A)=3TNV80F-SPSY2
(B)=
(C)=
(D)=
(E)=
(F)=

No.	Lev.	Parts No.	Description	Q'ty (A)	(B)	(C)	(D)	(E)	(F)	I	R
1	1	103854-39140	BOLT, PIPE JOINT	1							
2	1	101304-59020	JOINT, PIPE 12	1							
3	1	22190-120002	WASHER, SEAL 12	2							

N:Old ◄Yes/No► New. Q:Old ◄No/Yes► New. R:Old ◄Yes/Yes► New. S:Old ◄No/No► New. W:Add. Z:Discontinued. F:Interchangeable by set. K:Q'ty Change

Copyright (C) 2019 YANMAR GLOBAL CS CO., LTD. All RightsReserved.

Fig.14. STARTER MOTOR

(A)=3TNV80F-SPSY2
(B)=
(C)=
(D)=
(E)=
(F)=

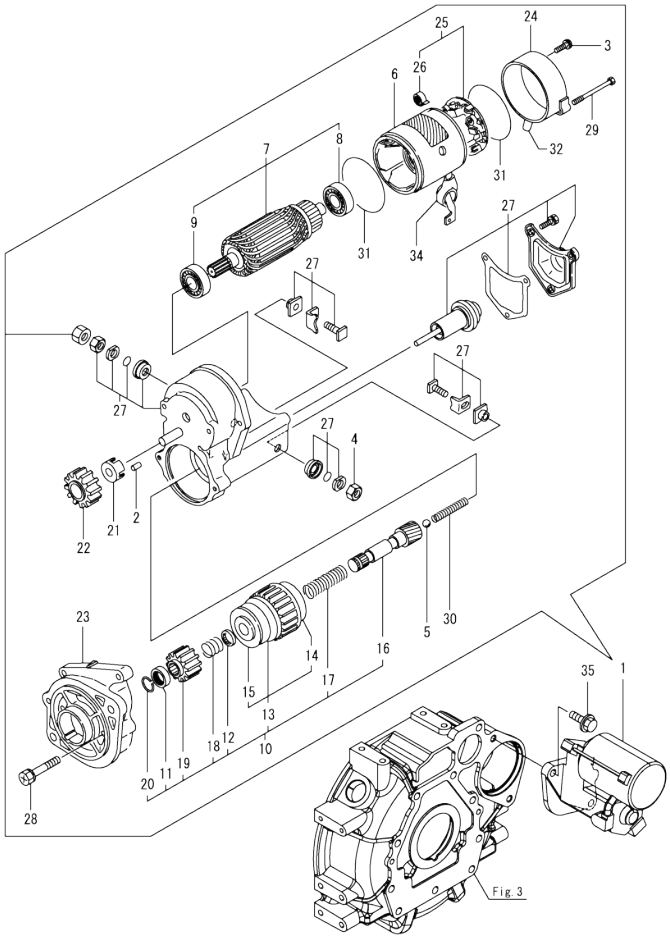

No.	Lev.	Parts No.	Description	Q'ty (A)	(B)	(C)	(D)	(E)	(F)	I	R
1	1	119740-77020	STARTER, RA1.4	1							
2	2	X0283060061	ROLLER	5							
3	2	129129-77460	SCREW	2							
4	2	X9490561370	NUT	1							
5	2	X9491200240	BALL, STEEL	1							
6	2	129407-77210	YOKE ASSY	1							
7	2	129407-77220	ARMATURE ASSY	1							
8	3	129129-77230	BEARING, BALL	1							
9	3	129129-77240	BEARING, BALL	1							
10	2	X1280996600	STARTER KIT	1							
11	3	X0280210230	NUT, PINION STOP	1							
12	3	X0283270140	RETAINER, SNAP	1							
13	3	129129-77390	CLUTCH ASSY, STARTER	1							
14	4	129129-77440	BEARING, BALL	1							
15	4	129129-77450	BEARING, BALL	1							
16	3	129129-77400	SHAFT, STARTER	1							
17	3	129129-77410	SPRING, COIL	1							
18	3	129407-77410	SPRING, COIL	1							
19	3	X0283712350	PINION, STARTER	1							
20	3	129129-77430	RING, SNAP	1							
21	2	129129-77260	RETAINER	1							
22	2	129129-77270	PINION	1							
23	2	X4284003310	HOUSING	1							
24	2	129407-77290	FRAME	1							
25	2	129407-77300	HOLDER ASSY	1							
26	3	X9491730461	SPRING, BRUSH	4							
27	2	X1534004151	SWITCH ASSY	1							
28	2	129129-77320	BOLT, W/WASHER	2							
29	2	129407-77330	BOLT	2							
30	2	129129-77340	SPRING	1							
31	2	129129-77350	O-RING	2							
32	2	129129-77362	COVER	1							
34	2	129129-77380	CAP	1							
35	1	26106-100252	BOLT, M10X 25 PLATED	2							

N:Old ←Yes/No→ New. Q:Old ←No/Yes→ New. R:Old ←Yes/Yes→ New. S:Old ←No/No→ New. W:Add. Z:Discontinued. F:Interchangeable by set. K:Q'ty Change

Copyright (C) 2019 YANMAR GLOBAL CS CO., LTD. All RightsReserved.

Fig.15. GENERATOR

(A)=3TNV80F-SPSY2
(B)=
(C)=
(D)=
(E)=
(F)=

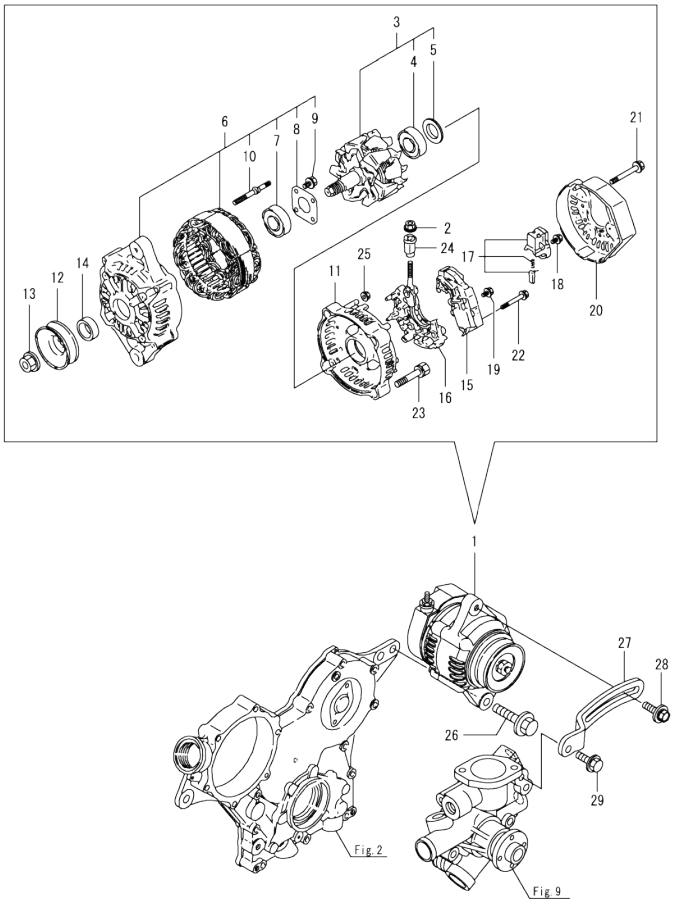

No.	Lev.	Parts No.	Description	Q'ty (A)	(B)	(C)	(D)	(E)	(F)	I	R
1	1	119626-77220	ALTERNATOR, 12V-55A	1							
2	2	X9490561001	NUT	1							
3	2	129052-77380	ROTOR ASSY	1							
4	3	123501-79240	BEARING, BALL	1							
5	3	119620-79250	COVER, BEARING	1							
6	2	129052-77422	FRAME ASSY	1							
7	3	119620-79200	BEARING, BALL	1							
8	3	119620-79210	PLATE, RETAINER	1							
9	3	119620-79220	SCREW	4							
10	3	119620-79230	STUD	2							
11	2	128401-77440	COVER, END	1							
12	2	119620-77461	PULLEY, GENERATOR	1							
13	2	119620-77471	NUT	1							
14	2	119620-77490	COLLAR	1							
15	2	129423-77720	REGULATOR ASSY	1							
16	2	129052-79260	HOLDER ASSY	1							
17	2	129052-79270	HOLDER ASSY, BRUSH	1							
18	2	119620-79290	SCREW	6							
19	2	119620-79300	SCREW	1							
20	2	119626-77450	COVER, END	1							
21	2	119620-79310	BOLT	3							
22	2	119620-79320	SCREW, W/WASHER	2							
23	2	119620-79330	BOLT	2							
24	2	119620-79340	BUSH, INSULATION	1							
25	2	119620-79350	NUT	2							
26	1	26106-100452	BOLT, M10X 45 PLATED	1							
27	1	119717-77330	ADJUSTER, BELT	1							
28	1	119810-77340	BOLT, ADJUSTER L=30	1							
29	1	26106-080202	BOLT, M8X 20 PLATED	1							

N:Old ←Yes/No→ New. Q:Old ←No/Yes→ New. R:Old ←Yes/Yes→ New. S:Old ←No/No→ New. W:Add. Z:Discontinued. F:Interchangeable by set. K:Q'ty Change

Copyright (C) 2019 YANMAR GLOBAL CS CO., LTD. All RightsReserved.

Fig.16. ACCESSORY

(A)=3TNV80F-SPSY2
(B)=
(C)=
(D)=
(E)=
(F)=

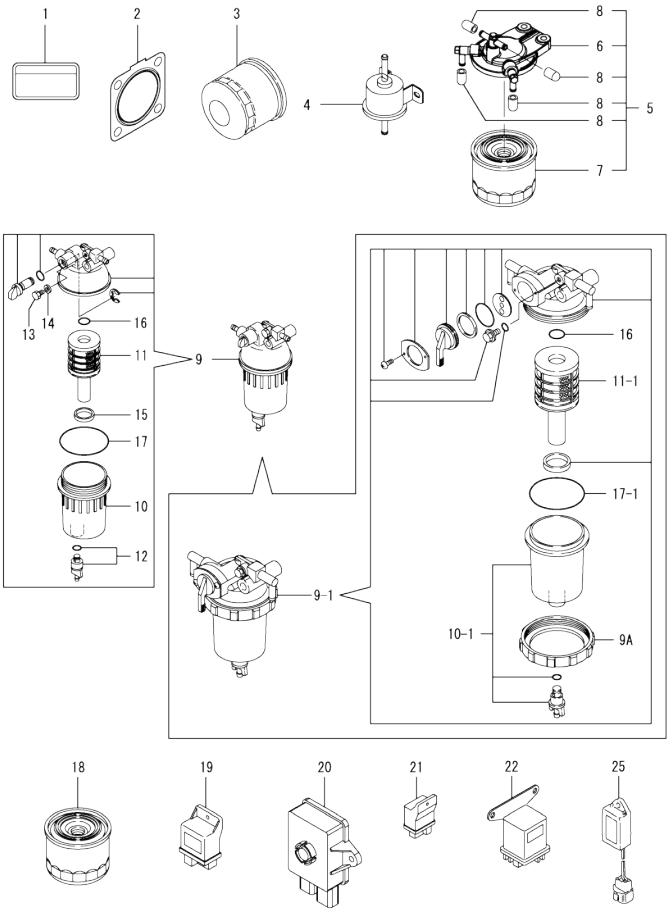

No.	Lev.	Parts No.	Description	Q'ty (A)	(B)	(C)	(D)	(E)	(F)	I	R
1	1	114110-07761	LABEL, FUEL CAUTION	1							
2	1	119515-13200	GASKET, SILENCER	1							
3	1	119305-35151	FILTER ASSY, D68XL65	1							
4	1	129612-52100	PUMP, FUEL FEED	1							
5	1	119541-55620	FILTER ASSY, FO	1							
6	2	119934-55611	BRACKET, FILTER	1							
7	2	129004-55801	FILTER, FUEL	1							
8	2	129461-59580	CAP, FUEL	4							
9	1	129242-55701	SEPARATOR ASSY,WATER	1							
9-1	1	129906-55711	SEPARATOR ASSY,WATER	1							N
	(A=E34481)										
9A	2	129100-55690	NUT, RETAINING	1							W
	(A=E34481)										
10	2	129242-55720	CUP, SEPARATOR	1							
10-1	2	119802-55730	CUP ASSY, SEPARATOR	1							S
	(A=E34481)										
11	2	129242-55730	ELEMENT, FUEL FILTER	1							
11-1	2	119802-55710	ELEMENT, FUEL	1							S
	(A=E34481)										
12	2	129242-55740	PLUG, DRAIN	1							Z
	(A=E34481)										
13	2	129242-55750	VALVE, AIR VENT	1							Z
	(A=E34481)										
14	2	129242-55760	GASKET, PLUG	1							Z
	(A=E34481)										
15	2	129242-55770	FLOAT	1							Z
	(A=E34481)										
16	2	24311-000160	O-RING, 1AP16.0	1							
17	2	24321-000750	O-RING, 1AG75.0	1							
17-1	2	24321-000650	O-RING, 1AG65.0	1							S
	(A=E34481)										
18	1	129004-55801	FILTER, FUEL	1							
19	1	119802-77200	RELAY, SAFETY	1							
20	1	119C10-77600	DRIVER, SOLENOID	1							
21	1	119953-77900	CONTROLLER, QHS	1							
22	1	119650-77911	RELAY ASSY, GLOW	1							
25	1	129211-77920	TIMER, SECTION 1	1							

N:Old ◄Yes/No► New. Q:Old ◄No/Yes► New. R:Old ◄Yes/Yes► New. S:Old ◄No/No► New. W:Add. Z:Discontinued. F:Interchangeable by set. K:Q'ty Change

Copyright (C) 2019 YANMAR GLOBAL CS CO., LTD. All RightsReserved.

Fig.17. GASKET SET

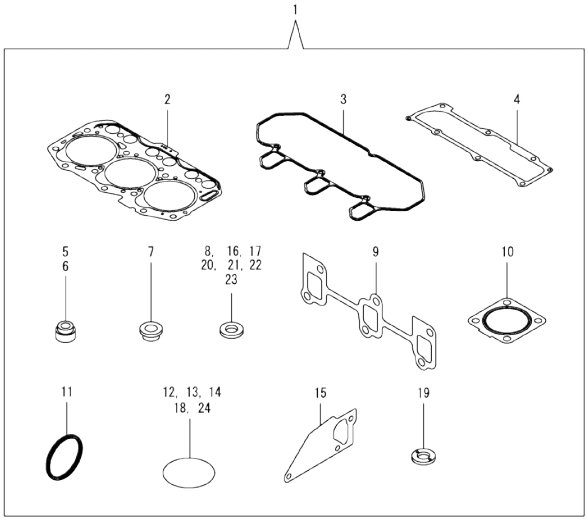

(A)=3TNV80F-SPSY2
(B)=
(C)=
(D)=
(E)=
(F)=

No.	Lev.	Parts No.	Description	Q'ty (A)	(B)	(C)	(D)	(E)	(F)	I	R
1	1	719E21-92601	GASKET SET	1							1
2	2	119E10-01330	GASKET SET, HEAD	1							
3	2	119718-11310	GASKET, BONNET	1							
4	2	119717-11331	GASKET, BONNET COVER	1							
5	2	119717-11340	SEAL, VALVE STEM	3							
6	2	119717-11350	SEAL, VALVE STEM	3							
7	2	129901-11450	PROTECTOR, NOZZLE	3							
8	2	119600-11460	GASKET, NOZZLE	6							
9	2	119717-13110	GASKET, MANIFOLD	1							
10	2	119515-13200	GASKET, SILENCER	1							
11	2	119C10-21931	PACKING, WASHER	1							
12	2	119624-32040	O-RING, P12.0	1							
13	2	119717-32050	O-RING, P17.0	2							
14	2	119717-32060	O-RING, P15.0	1							
15	2	119717-42020	GASKET, WATER PUMP	1							
16	2	124465-44950	GASKET, 16	1							
17	2	129150-49360	GASKET, 10	1							
18	2	121850-51960	O-RING, FUEL PUMP	1							
19	2	129901-59560	GASKET, FUEL RETURN	3							
20	2	22190-080002	WASHER, SEAL 8	4							
21	2	22190-120002	WASHER, SEAL 12	4							
22	2	22190-160002	WASHER, SEAL 16	1							
23	2	23414-080000	GASKET, 8X1.0	1							
24	2	24311-000320	O-RING, 1AP32.0	2							

Remarks
(1)Optional parts.

N:Old $\xleftarrow[\text{No}]{\text{Yes}}$ New. Q:Old $\xleftarrow[\text{Yes}]{\text{No}}$ New, R:Old $\xleftarrow[\text{Yes}]{\text{Yes}}$ New, S:Old $\xleftarrow[\text{No}]{\text{No}}$ New. W:Add. Z:Discontinued. F:Interchangeable by set. K:Q'ty Change

Copyright (C) 2019 YANMAR GLOBAL CS CO., LTD. All RightsReserved.

Parts No. Index

Parts No.	Fig. No.	Ref. No.
101304-59020	13	2
103854-39140	13	1
105010-11490	4	3
105311-01090	1	4
105425-01690	3	9
114110-07761	16	1
114250-39450	8	11
119131-18320	5	6
119226-07900	4	54
119256-44760	9	19
119285-01990	1	6
119285-11990	4	11
119305-35151	8	17
	16	3
119515-01601	3	2
119515-13200	16	2
	17	10
119515-42350	9	17
119515-59581	12	43
119515-61440	11	17
119541-55620	16	5
119600-11460	4	2
	17	8
119620-01750	3	3
119620-02020	1	7
119620-11280	4	26
119620-14200	6	1
119620-21500	7	7
119620-59700	12	44
119620-77461	15	12
119620-77471	15	13
119620-77490	15	14
119620-79200	15	7
119620-79210	15	8
119620-79220	15	9
119620-79230	15	10
119620-79250	15	5
119620-79290	15	18
119620-79300	15	19
119620-79310	15	21
119620-79320	15	22
119620-79330	15	23
119620-79340	15	24
119620-79350	15	25
119621-21681	7	12
119623-01250	1	5
119624-32040	2	18
	17	12
119626-77220	15	1
119626-77450	15	20

Parts No.	Fig. No.	Ref. No.
119650-77911	16	22
119660-01911	2	17
119660-61901	11	66
119717-01501	2	1
119717-01521	2	5
119717-01570	2	2
119717-01720	3	7
119717-01750	2	16
119717-01800	2	7
119717-02411	1	10
119717-02930	1	23
119717-03031	4	36
119717-03070	4	37
		38
119717-11131	4	15
119717-11190	4	17
119717-11200	4	21
119717-11240	4	22
119717-11260	4	25
119717-11320	4	46
119717-11331	4	47
	17	4
119717-11340	4	18
	17	5
119717-11350	4	19
	17	6
119717-11381	4	35
119717-11650	4	27
119717-11800	4	58
119717-13110	5	2
	17	9
119717-13600	5	3
119717-14400	6	2
119717-14581	6	3
119717-21200	7	4
119717-23200	7	27
119717-23601	7	28
119717-23611	7	31
119717-23911	7	30
119717-25050	6	9
119717-25101	6	10
119717-25911	6	16
119717-25930	6	15
119717-32050	2	19
	17	13
119717-32060	8	5
	17	14
119717-32080	2	9
119717-32100	2	8
119717-32110	2	13

Parts No.	Fig. No.	Ref. No.
119717-32120	2	14
119717-34801	8	1
119717-35080	8	6
119717-35140	8	3
119717-39210	8	12
119717-42020	9	13
	17	15
119717-42031	9	3
119717-49800	9	22
119717-51150	6	17
119717-51420	10	67
119717-51711	10	92
119717-51750	10	93
119717-51761	10	94
119717-51860	10	108
119717-51930	11	2
119717-59510	12	32
119717-61050	11	3
119717-61060	11	94
119717-61070	11	4
119717-77330	15	27
119717-77801	4	56
119717-77820	4	57
119718-11310	4	45
	17	3
119734-01590	2	3
119734-02220	3	4
119740-01770	3	8
119740-13100	5	1
119740-61470	11	80
119740-77020	14	1
119744-59560	12	38
119802-03100	4	39
119802-03110	4	40
119802-03121	4	41
119802-03131	4	42
119802-03141	4	43
119802-32130	2	15
119802-55710	16	11 -1
119802-55730	16	10 -1
119802-77200	16	19
119810-01200	1	26
119810-02941	1	34
119810-77340	15	28
119813-59950	12	45
119934-55611	16	6
119953-77900	16	21
119C00-61900	11	81
119C00-61901	11	81 -1
119C10-21590	7	8

Parts No.	Fig. No.	Ref. No.
119C10-21650	7	11
119C10-21931	7	13
	17	11
119C10-21940	7	14
119C10-42320	9	10
119C10-53000	12	1
119C10-53010	12	3
119C10-77600	16	20
119E00-01560	1	1
119E10-01330	1	27
	17	2
119E10-11100	4	13
119E10-11110	4	14
119E10-11740	4	4
119E10-21700	7	1
119E10-22300	7	22
119E10-22500	7	18
119E10-22550	7	34
119E10-23001	7	24
119E10-42001	9	1
119E10-51250	10	114
119E10-59810	12	20
119E10-59820	12	24
119E10-59830	12	28
119E11-22080	7	16
119E11-22900	7	33
121520-34810	8	2
121850-51960	2	20
	17	18
122710-51090	10	8
123501-79240	15	4
124060-01050	1	11
124066-59100	12	39
124101-49531	9	21
124160-01751	2	28
	4	34
124160-01910	1	12
124250-49351	9	28
124465-44950	9	27
	17	16
124950-21600	7	10
128401-77440	15	11
129001-32320	2	11
129001-32330	2	12
129004-55801	16	7
		18
129005-59830	8	13
129052-77380	15	3
129052-77422	15	6
129052-79260	15	16

Parts No. Index

Parts No.	Fig. No.	Ref. No.
129052-79270	15	17
129100-01580	3	1
	7	2
129100-52200	10	112
129100-55690	16	9 A
129107-44901	9	26
129129-77230	14	8
129129-77240	14	9
129129-77260	14	21
129129-77270	14	22
129129-77320	14	28
129129-77340	14	30
129129-77350	14	31
129129-77362	14	32
129129-77380	14	34
129129-77390	14	13
129129-77400	14	16
129129-77410	14	17
129129-77430	14	20
129129-77440	14	14
129129-77450	14	15
129129-77460	14	3
129150-11230	4	28
129150-11750	4	30
129150-25301	6	14
129150-49360	9	29
	17	17
129150-59120	12	15
129150-59131	12	18
129155-51020	10	4
129155-51280	10	57
		58
	11	10
129155-51400	10	65
129155-51580	10	89
129155-51701	10	91
129155-52051	10	111
129155-61461	11	79
129211-77920	16	25
129242-55701	16	9
129242-55720	16	10
129242-55730	16	11
129242-55740	16	12
129242-55750	16	13
129242-55760	16	14
129242-55770	16	15
129258-42290	9	18
129407-77210	14	6
129407-77220	14	7
129407-77290	14	24

Parts No.	Fig. No.	Ref. No.
129407-77300	14	25
129407-77330	14	29
129407-77410	14	18
129423-77720	15	15
129461-59580	16	8
129508-11180	4	16
129612-52100	16	4
129630-77900	11	128
129900-32130	2	10
129901-11450	4	1
	17	7
129901-53800	12	4
129901-59560	12	42
	17	19
129906-55711	16	9 -1
129E00-13610	5	4
129E00-13630	5	5
158552-61900	11	84
158600-51270	10	56
158600-51410	10	66
158600-51420	10	68
158600-51570	10	88
158600-51790	10	95
171056-49120	9	25
22190-080002	8	14
		16
	17	20
22190-100002	11	87
22190-120002	12	51
	13	3
	17	21
22190-160002	3	11
	10	97
	17	22
22217-120000	10	98
22242-000120	4	31
22252-000220	7	23
22351-050010	10	99
22351-060012	4	20
22372-040000	11	89
22512-040120	7	5
		15
22857-500100	4	48
		49
22857-500160	4	50
23414-080000	9	14
	17	23
23857-030000	8	15
23876-005000	4	12
23876-030000	2	6

Parts No.	Fig. No.	Ref. No.
24311-000160	16	16
24311-000320	2	29
	4	51
	17	24
24321-000650	16	17 -1
24321-000750	16	17
24357-240200	11	83
26022-050122	10	103
26106-060102	8	10
	11	71
		90
26106-060122	2	21
	6	8
26106-060142	11	91
26106-060162	2	22
	10	115
26106-060202	4	52
	11	92
26106-060352	6	13
26106-060402	2	23
		24
26106-060452	11	93
26106-060552	9	20
26106-060602	2	25
26106-060652	2	26
26106-060752	4	53
26106-080122	3	12
	9	15
26106-080162	4	55
	10	116
26106-080202	15	29
26106-080282	9	23
26106-080302	3	13
26106-080402	4	33
26106-080452	3	14
26106-080502	3	15
	9	16
26106-080652	9	24
26106-100252	14	35
26106-100452	15	26
26206-100252	3	5
26206-100302	3	6
26306-080002	2	27
	5	7
26366-080002	11	72
26577-060122	9	12
26716-120002	10	105
26979-050162	4	32
27241-120000	1	13
719717-02901	1	28

Parts No.	Fig. No.	Ref. No.
719717-02911	1	31
719734-01500	2	4
719E21-92601	17	1
719E40-51450	10	1
X0280210230	14	11
X0283060061	14	2
X0283270140	14	12
X0283712350	14	19
X1280996600	14	10
X1534004151	14	27
X4284003310	14	23
X9490561001	15	2
X9490561370	14	4
X9491200240	14	5
X9491730461	14	26