YANMAR

PARTS CATALOG

0CD50-M05990EN

Last update Apr., 2021

PREFACE

This parts catalog is the 1st edition of 3TNV80FT-ZMWM2 for Weidmann.

Published : April, 2020

Contents

0CD50-M05990

Fig. No.	Fig. Name
ENGINE	
1.	CYLINDER BLOCK
2.	GEAR HOUSING
3.	FLYWHEEL HOUSING & OIL SUMP
4.	CYLINDER HEAD & BONNET
5.	SUCTION MANIFOLD
6.	EXHAUST MANIFOLD
7.	CAMSHAFT & DRIVING GEAR
8.	TURBINE
9.	CRANKSHAFT & PISTON
10.	LUB. OIL SYSTEM
11.	LUB. OIL PIPE
12.	COOLING WATER SYSTEM
13.	FUEL INJECTION PUMP
14.	GOVERNOR
15.	FUEL INJECTION VALVE
16.	STARTER MOTOR
17.	GENERATOR
18.	ELECTRONIC CONTROL UNIT(ECU)
19.	ACCESSORY

Fig.1. CYLINDER BLOCK

(A)=3TNV80FT-ZMWM2
(B)=
(C)=
(D)=
(E)=
(F)=

No.	Lev.	Parts No.	Description	Q'ty (A)	(B)	(C)	(D)	(E)	(F)	I	R
1	1	119E11-01150	BLOCK ASSY, CYLINDER	1							
4	2	105311-01090	PLUG, 30	4							
5	2	119623-01250	PLUG, 45	1							
6	2	119285-01990	PLUG, 25	3							
7	2	119620-02020	BOLT, METAL CAP	8							
10	2	119717-02411	BUSH, CAMSHAFT	1							
11	2	124060-01050	PLUG, PT1/8	1							
12	2	124160-01910	PLUG, PT1/4	1							
13	2	27241-120000	PLUG, 12	1							
23	2	119717-02930	METAL ASSY, THRUST	2							
26	1	119810-01200	BOLT, CYLINDER HEAD	14							
27	1	119E10-01330	GASKET SET, HEAD	1							
28	1	719717-02901	METAL ASSY, MAIN	4							1
31	1	719717-02911	METAL ASSY, MAIN .25	4							2
34	1	119810-02941	METAL ASSY, 0.25 OS	2							3

Remarks
(1)Spare parts.
(2)Under-sized(U.S.=0.25) parts.
(3)Over-sized(O.S.=0.25) parts.

N:Old ←Yes/No→ New. Q:Old ←No/Yes→ New. R:Old ←Yes/Yes→ New. S:Old ←No/No→ New. W:Add. Z:Discontinued. F:Interchangeable by set. K:Q'ty Change

Copyright (C) 2020 YANMAR GLOBAL CS CO., LTD. All RightsReserved.

Fig.2. GEAR HOUSING

(A)=3TNV80FT-ZMWM2
(B)=
(C)=
(D)=
(E)=
(F)=

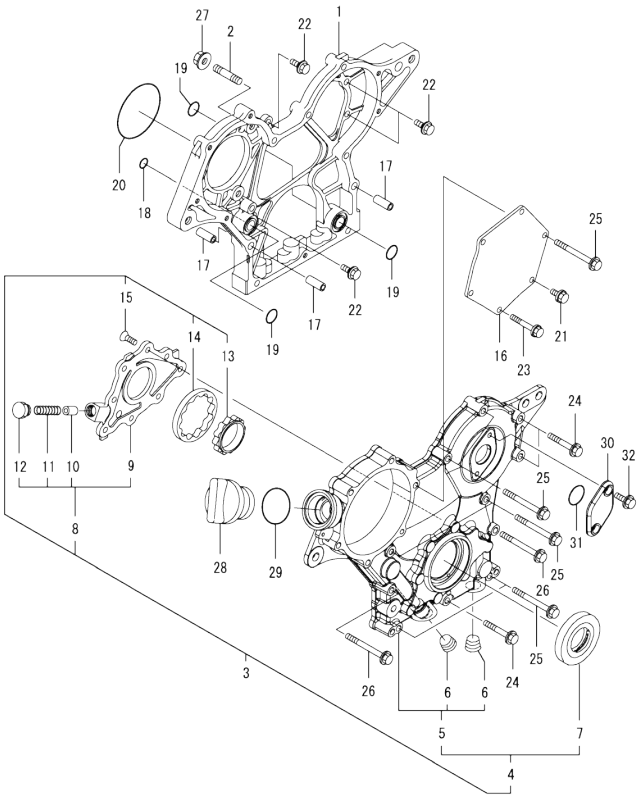

No.	Lev.	Parts No.	Description	Q'ty (A)	(B)	(C)	(D)	(E)	(F)	I	R
1	1	119717-01501	CASE, GEAR	1							
2	1	119717-01570	STUD	3							
3	1	119734-01580	COVER ASSY, CASE	1							
4	2	719734-01510	COVER ASSY, CASE	1							
5	3	119744-01521	COVER, GEAR CASE	1							
6	4	23876-030000	PLUG, R03	2							
7	3	119717-01800	SEAL, OIL	1							
8	2	119717-32100	COVER ASSY, PUMP	1							
9	3	119717-32080	COVER, OIL PUMP	1							
10	3	129900-32130	VALVE, RELIEF	1							
11	3	129001-32320	SPRING	1							
12	3	129001-32330	PLUG	1							
13	2	119717-32110	ROTOR, INNER	1							
14	2	119717-32120	ROTOR, OUTER	1							
15	2	119802-32130	SCREW, M6X16	8							
16	1	119717-01750	COVER, PUMP	1							
17	1	119660-01911	PIPE, KNOCK 6X17	4							
18	1	119624-32040	O-RING, P12.0	1							
19	1	119717-32050	O-RING, P17.0	3							
20	1	121850-51960	O-RING, FUEL PUMP	1							
21	1	26106-060122	BOLT, M6X 12 PLATED	1							
22	1	26106-060162	BOLT, M6X 16 PLATED	4							
23	1	26106-060402	BOLT, M6X 40 PLATED	4							
24	1	26106-060402	BOLT, M6X 40 PLATED	3							
25	1	26106-060602	BOLT, M6X 60 PLATED	7							
26	1	26106-060652	BOLT, M6X 65 PLATED	2							
27	1	26306-080002	NUT, M8	3							
28	1	124160-01751	CAP, FILLER	1							
29	1	24311-000320	O-RING, 1AP32.0	1							
30	1	121023-01551	COVER, TACHOMETER	1							
31	1	24341-000240	O-RING, 1AS24.0	1							
32	1	26106-060162	BOLT, M6X 16 PLATED	2							

N:Old ◄Yes/No► New. Q:Old ◄No/Yes► New. R:Old ◄Yes/Yes► New. S:Old ◄No/No► New. W:Add. Z:Discontinued. F:Interchangeable by set. K:Q'ty Change

Copyright (C) 2020 YANMAR GLOBAL CS CO., LTD. All RightsReserved.

Fig.3. FLYWHEEL HOUSING & OIL SUMP

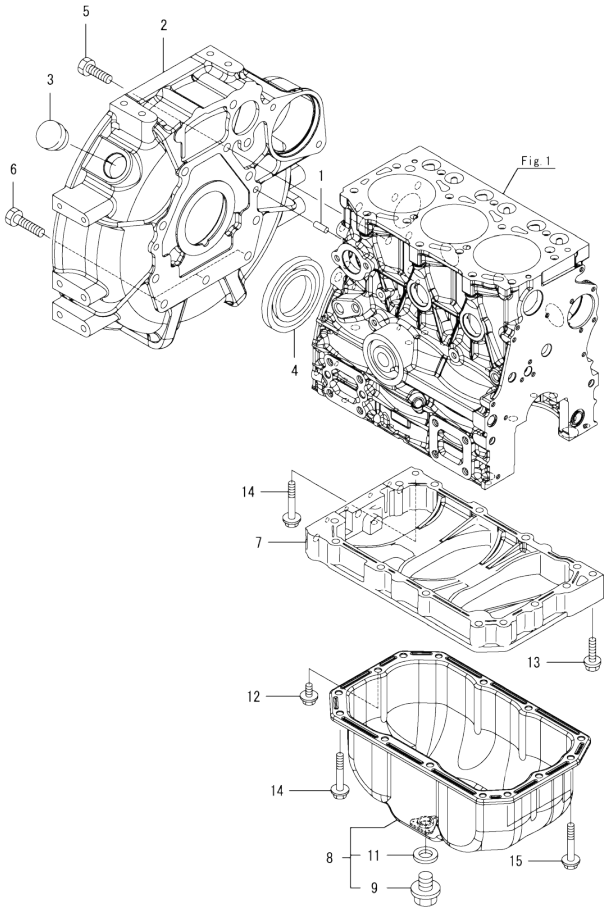

(A)=3TNV80FT-ZMWM2 (D)=
(B)= (E)=
(C)= (F)=

No.	Lev.	Parts No.	Description	Q'ty (A)	(B)	(C)	(D)	(E)	(F)	I	R
1	1	129100-01580	PIN, PARALLEL 8X16	2							
2	1	119E33-01610	HOUSING, FLYWHEEL	1							
3	1	119620-01750	CAP, WHEEL COVER	1							
4	1	119734-02220	SEAL, OIL WHEEL SIDE	1							
5	1	26206-100252	BOLT, M10X 25 PLATED	8							
6	1	26206-100302	BOLT, M10X 30 PLATED	3							
7	1	119717-01720	SPACER, OIL PAN	1							
8	1	119746-01780	OIL PAN ASSY	1							
9	2	105425-01690	PLUG, DRAIN M16	1							
11	2	22190-160002	WASHER, SEAL 16	1							
12	1	26106-080122	BOLT, M8X 12 PLATED	1							
13	1	26106-080302	BOLT, M8X 30 PLATED	1							
14	1	26106-080452	BOLT, M8X 45 PLATED	11							
15	1	26106-080502	BOLT, M8X 50 PLATED	3							

N:Old ◄Yes/No► New. Q:Old ◄No/Yes► New. R:Old ◄Yes/Yes► New. S:Old ◄No/No► New. W:Add. Z:Discontinued. F:Interchangeable by set. K:Q'ty Change

Copyright (C) 2020 YANMAR GLOBAL CS CO., LTD. All RightsReserved.

Fig.4. CYLINDER HEAD & BONNET

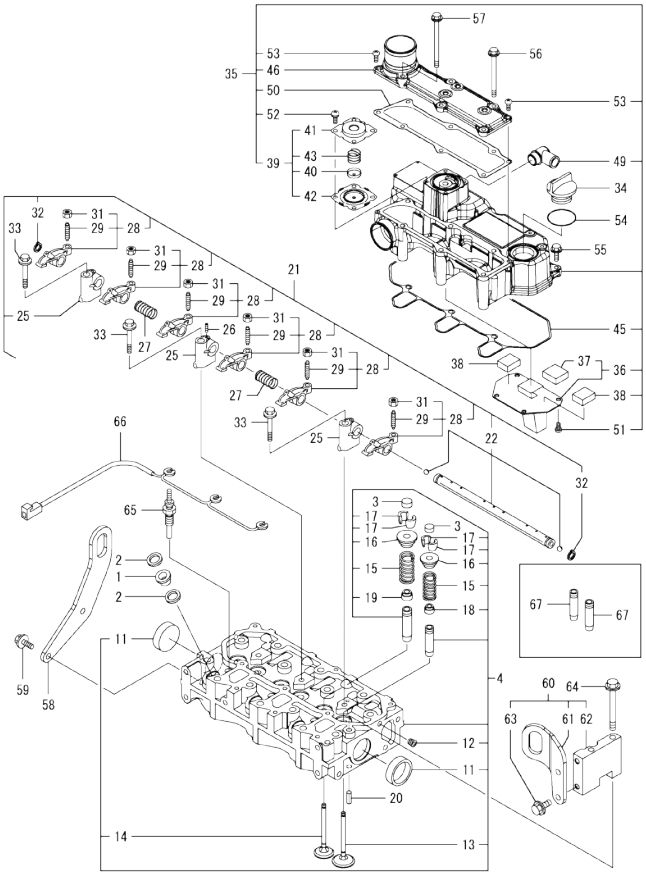

				(A)=3TNV80FT-ZMWM2			(D)=					
				(B)=			(E)=					
				(C)=			(F)=					
No.	Lev.	Parts No.	Description	Q'ty (A)	(B)	(C)	(D)	(E)	(F)		I	R
1	1	129901-11450	PROTECTOR, NOZZLE	3								
2	1	119600-11460	GASKET, NOZZLE	6								
3	1	105010-11490	CAP, VALVE	6								
4	1	119E11-11740	HEAD ASSY, CYLINDER	1								
11	2	119285-11990	PLUG, 35	2								
12	2	23876-005000	PLUG, R005	1								
13	2	119E10-11100	VALVE, INTAKE	3								
14	2	119E10-11110	VALVE, EXHAUST	3								
15	2	119717-11131	SPRING, VALVE	6								
16	2	129508-11180	RETAINER, SPRING	6								
17	2	119717-11190	COTTER, VALVE	12								
18	2	119717-11340	SEAL, VALVE STEM	3								
19	2	119717-11350	SEAL, VALVE STEM	3								
20	1	22351-060012	PIN, SPRING 6.0X12	2								
21	1	119717-11200	SUPPORT ASSY, ROCKER	1								
22	2	119717-11240	SHAFT ASSY, ARM	1								
25	2	119717-11260	SUPPORT, ROCKER ARM	3								
26	2	119260-11270	SCREW	1								
27	2	119620-11280	SPRING, SHAFT	2								
28	2	119717-11650	ARM ASSY, ROCKER INT	6								
29	3	129150-11230	SCREW, VALVE ADJUST	6								
31	3	129150-11750	NUT, M8XP1.0	6								
32	2	22242-000120	RING, 12	2								
33	1	26106-080402	BOLT, M8X 40 PLATED	3								
34	1	124160-01751	CAP, FILLER	1								
35	1	119E11-11390	BONNET ASSY	1								
36	2	119717-03031	PLATE, BAFFLE	1								
37	3	119717-03070	BAFFLE, BREATHER	1								
38	2	119717-03070	BAFFLE, BREATHER	2								
39	2	119802-03100	DIAPHRAGM ASSY	1								
40	3	119802-03110	PLATE, DIAPHRAGM	1								
41	3	119802-03121	COVER, DIAPHRAGM	1								
42	3	119802-03131	DIAPHRAGM, BREATHER	1								
43	3	119802-03141	SPRING, DIAPHRAGM	1								
45	2	119718-11310	GASKET, BONNET	1								
46	2	119E11-11320	COVER ASSY, BONNET	1								
49	2	119100-11330	ELBOW, BREATHER	1								
50	2	119717-11331	GASKET, BONNET COVER	1								
51	2	22857-500100	SCREW, 5X10	4								
52	2	22857-500100	SCREW, 5X10	4								
53	2	22857-500160	SCREW, 5X16	2								
54	1	24311-000320	O-RING, 1AP32.0	1								
55	1	26106-060202	BOLT, M6X 20 PLATED	3								
56	1	26106-060752	BOLT, M6X 75 PLATED	4								
57	1	26106-060852	BOLT, M6X 85 PLATED	2								
58	1	119E33-07900	LIFTER, ENGINE	1								
59	1	26106-080162	BOLT, M8X 16 PLATED	2								
60	1	119E33-07920	LIFTER ASSY	1								
61	2	119034-07900	LIFTER, ENGINE	1								
62	2	119E33-07910	SPACER, RIFTER	1								
63	2	26106-080162	BOLT, M8X 16 PLATED	2								

Remarks
(1)Spare parts.

N:Old ←Yes/No→ New. Q:Old ←No/Yes→ New. R:Old ←Yes/Yes→ New. S:Old ←No/No→ New. W:Add. Z:Discontinued. F:Interchangeable by set. K:Q'ty Change

++ CONTINUE ++

Copyright (C) 2020 YANMAR GLOBAL CS CO., LTD. All RightsReserved.

Fig.4. CYLINDER HEAD & BONNET

(A)=3TNV80FT-ZMWM2
(B)=
(C)=
(D)=
(E)=
(F)=

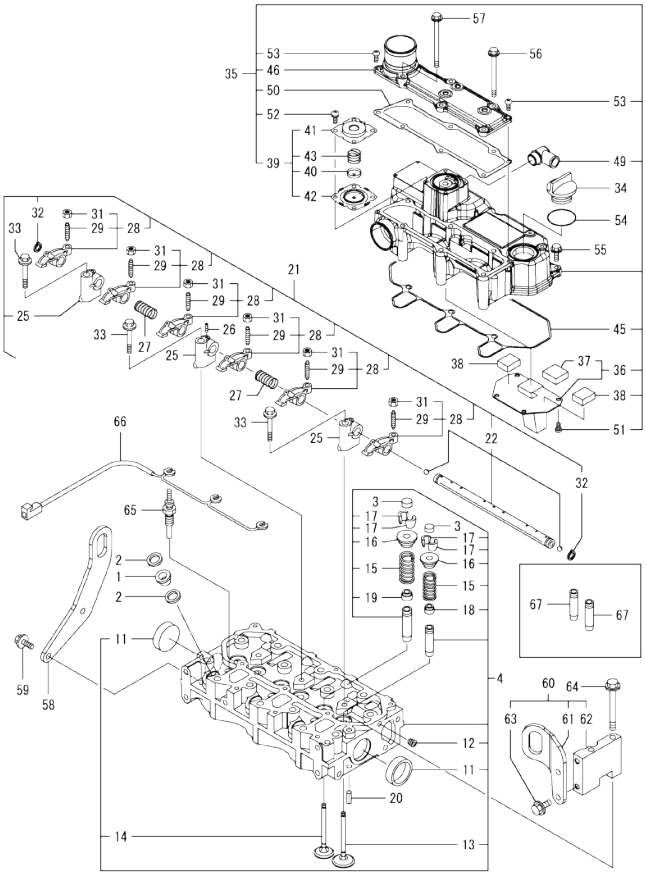

No.	Lev.	Parts No.	Description	Q'ty (A)	(B)	(C)	(D)	(E)	(F)	I	R
64	1	26106-080752	BOLT, M8X 75 PLATED	2							
65	1	119717-77801	PLUG, GLOW	3							
66	1	119717-77820	CONNECTOR, GLOW PLUG	1							
67	1	119717-11800	GUIDE, VALVE	6							1

Remarks
(1)Spare parts.

N:Old ←Yes/No→ New. Q:Old ←No/Yes→ New. R:Old ←Yes/Yes→ New. S:Old ←No/No→ New. W:Add. Z:Discontinued. F:Interchangeable by set. K:Q'ty Change

Copyright (C) 2020 YANMAR GLOBAL CS CO., LTD. All RightsReserved.

Fig.5. SUCTION MANIFOLD

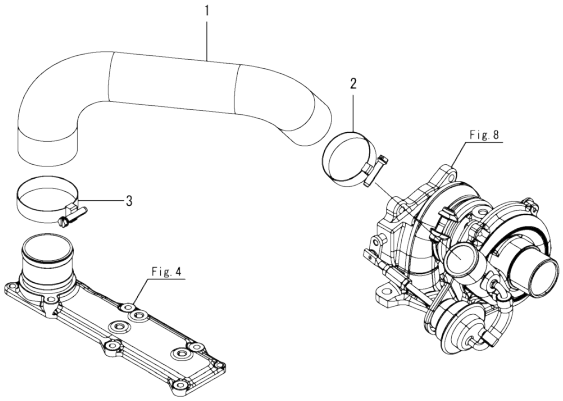

(A)=3TNV80FT-ZMWM2
(B)=
(C)=
(D)=
(E)=
(F)=

No.	Lev.	Parts No.	Description	Q'ty (A)	(B)	(C)	(D)	(E)	(F)	I	R
1	1	119E33-12010	HOSE, AIR INTAKE	1							
2	1	23000-048000	CLAMP, 48	1							
3	1	23000-054000	CLAMP, 54	1							

N:Old ◄Yes/No► New. Q:Old ◄No/Yes► New. R:Old ◄Yes/Yes► New. S:Old ◄No/No► New. W:Add. Z:Discontinued. F:Interchangeable by set. K:Q'ty Change

Copyright (C) 2020 YANMAR GLOBAL CS CO., LTD. All RightsReserved.

Fig.6. EXHAUST MANIFOLD

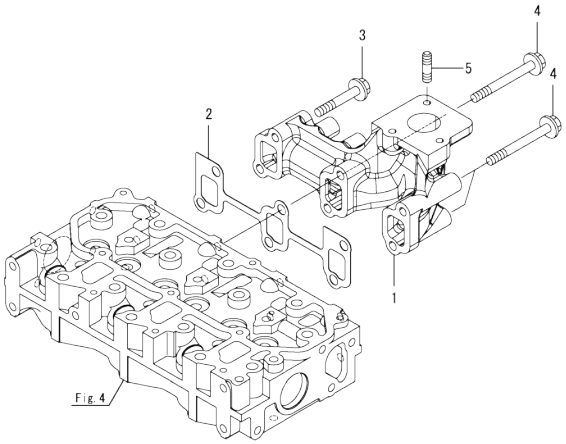

(A)=3TNV80FT-ZMWM2
(B)=
(C)=
(D)=
(E)=
(F)=

No.	Lev.	Parts No.	Description	Q'ty (A)	(B)	(C)	(D)	(E)	(F)	I	R
1	1	119E11-13100	MANIFOLD, EXHAUST	1							
2	1	119717-13110	GASKET, MANIFOLD	1							
3	1	129E00-13610	BOLT, M8X50 10.9	3							
4	1	119802-13661	BOLT, M8X75 10.9T	3							
5	1	129418-18320	STUD, M8X20	3							

N:Old ◄Yes/No► New. Q:Old ◄No/Yes► New. R:Old ◄Yes/Yes► New. S:Old ◄No/No► New. W:Add. Z:Discontinued. F:Interchangeable by set. K:Q'ty Change

Copyright (C) 2020 YANMAR GLOBAL CS CO., LTD. All RightsReserved.

Fig.7. CAMSHAFT & DRIVING GEAR

(A)=3TNV80FT-ZMWM2
(B)=
(C)=
(D)=
(E)=
(F)=

No.	Lev.	Parts No.	Description	Q'ty (A)	(B)	(C)	(D)	(E)	(F)	I	R
1	1	119620-14200	TAPPET	6							
2	1	119717-14400	ROD, PUSH	6							
3	1	119717-14581	CAMSHAFT ASSY	1							
8	1	26106-060122	BOLT, M6X 12 PLATED	2							
9	1	119717-25050	SHAFT, IDLE GEAR	1							
10	1	119717-25101	GEAR ASSY, IDLE	1							
13	1	26106-060352	BOLT, M6X 35 PLATED	3							
14	1	129150-25301	BOLT, INJECTION PUMP	4							
15	1	119717-25930	GEAR, PUMP	1							
16	1	119717-25911	BUSH, IDLE GEAR	1							1
17	1	119717-51150	FLANGE, CAMSHAFT	1							

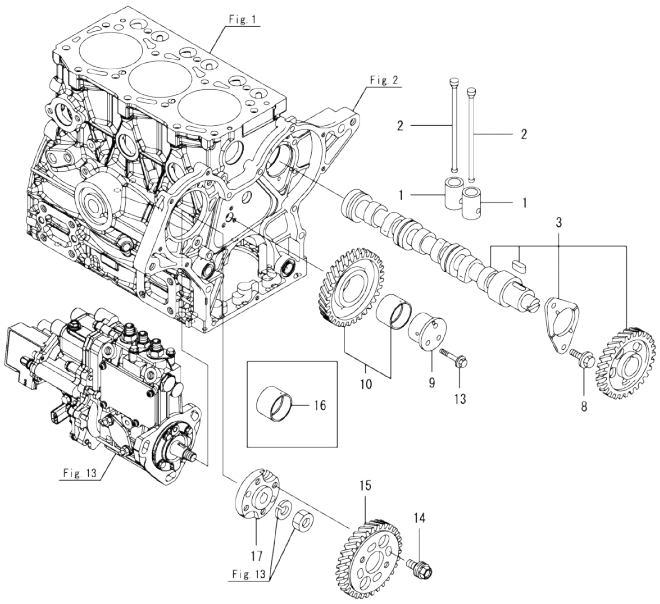

Remarks
(1)Spare parts.

N:Old ←Yes/No→ New. Q:Old ←No/Yes→ New. R:Old ←Yes/Yes→ New. S:Old ←No/No→ New. W:Add. Z:Discontinued. F:Interchangeable by set. K:Q'ty Change

Copyright (C) 2020 YANMAR GLOBAL CS CO., LTD. All RightsReserved.

Fig.8. TURBINE

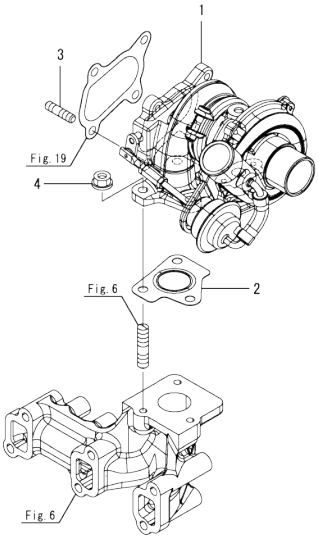

(A)=3TNV80FT-ZMWM2
(B)=
(C)=
(D)=
(E)=
(F)=

No.	Lev.	Parts No.	Description	Q'ty (A)	(B)	(C)	(D)	(E)	(F)	I	R
1	1	129A01-18011	TURBOCHARGER, RHF3	1							
2	1	129A01-18080	GASKET, TURBINE IN	1							
3	1	119131-18320	STUD, M8X22	4							
4	1	26306-080002	NUT, M8	3							

N:Old ◄Yes/No► New. Q:Old ◄No/Yes► New. R:Old ◄Yes/Yes► New. S:Old ◄No/No► New. W:Add. Z:Discontinued. F:Interchangeable by set. K:Q'ty Change

Copyright (C) 2020 YANMAR GLOBAL CS CO., LTD. All RightsReserved.

Fig.9. CRANKSHAFT & PISTON

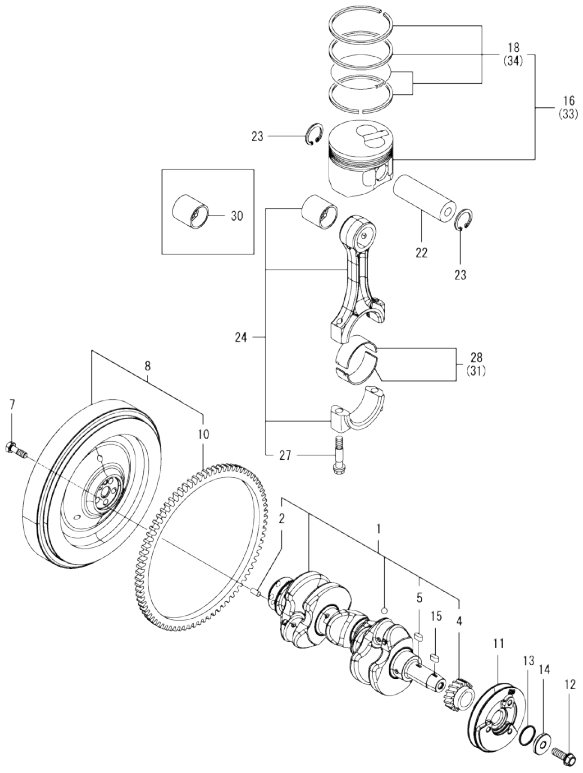

(A)=3TNV80FT-ZMWM2
(B)=
(C)=
(D)=
(E)=
(F)=

No.	Lev.	Parts No.	Description	Q'ty (A)	(B)	(C)	(D)	(E)	(F)	I	R
1	1	119E10-21700	CRANKSHAFT ASSY	1							
2	2	129100-01580	PIN, PARALLEL 8X16	1							
4	2	119717-21200	GEAR, CRANKSHAFT	1							
5	2	22512-040120	KEY, 4X 12	1							
7	1	121111-21501	BOLT, FLYWHEEL	5							
8	1	119E10-21590	FLYWHEEL ASSY	1							
10	2	119865-21600	GEAR, RING Z=116	1							
11	1	119C40-21650	V-PULLEY, CRANKSHAFT	1							
12	1	119621-21681	BOLT, FLANGE 12X1.25	1							
13	1	119C10-21931	PACKING, WASHER	1							
14	1	119C10-21940	WASHER, V-PULLEY	1							
15	1	22512-040120	KEY, 4X 12	1							
16	1	119E11-22080	PISTON ASSY	3							
18	2	119E10-22500	RING SET, PISTON	3							
22	1	119E10-22300	PIN, PISTON	3							
23	1	22252-000220	RING, 22	6							
24	1	119E10-23001	ROD ASSY, CONNECTING	3							
27	2	119717-23200	BOLT, CONNECTING ROD	6							
28	1	119717-23601	METAL ASSY,CRANK PIN	3							
30	1	119717-23911	BUSH, PISTON PIN	3							1
31	1	119717-23611	METAL ASSY, PIN .25	3							2
33	1	119E11-22900	PISTON ASSY, 0.25 OS	3							3
34	2	119E10-22550	RING SET, PISTON .25	3							3

Remarks
(1)Spare parts.
(2)Under-sized(U.S.=0.25) parts.
(3)Over-sized(O.S.=0.25) parts.

N:Old ←Yes/No→ New. Q:Old ←No/Yes→ New, R:Old ←Yes/Yes→ New, S:Old ←No/No→ New. W:Add. Z:Discontinued. F:Interchangeable by set. K:Q'ty Change

Copyright (C) 2020 YANMAR GLOBAL CS CO., LTD. All RightsReserved.

Fig.10. LUB. OIL SYSTEM

(A)=3TNV80FT-ZMWM2
(B)=
(C)=
(D)=
(E)=
(F)=

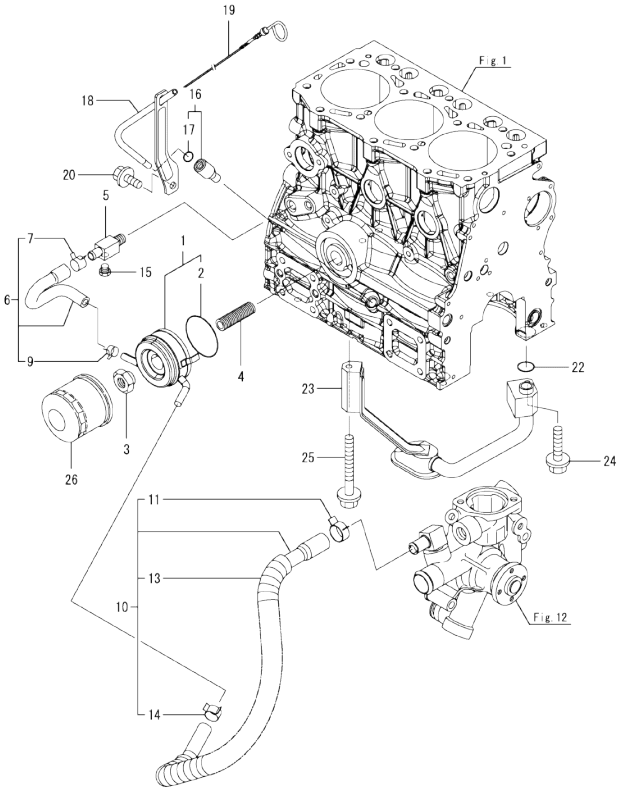

No.	Lev.	Parts No.	Description	Q'ty (A)	(B)	(C)	(D)	(E)	(F)	I	R
1	1	119717-33010	COOLER, OIL	1							
2	2	129508-33050	O-RING	1							
3	1	129417-33111	NUT, OIL COOLER	1							
4	1	119E11-35140	STUD, LO FILTER	1							
5	1	129006-44480	JOINT, R02	1							
6	1	119E11-49010	PIPE ASSY, COOLER IN	1							
7	2	171008-03990	CLAMP, HOSE 18.5	1							
9	2	23080-015000	CLAMP, 15	1							
10	1	129657-49020	PIPE, COOLER OUTLET	1							
11	2	171008-03990	CLAMP, HOSE 18.5	1							
13	2	129657-49180	TUBE, CORRUGATED 19	1							
14	2	23080-015000	CLAMP, 15	1							
15	1	171056-49120	PLUG, DRAIN R1/4	1							
16	1	119260-34810	GUIDE, DIPSTICK	1							
17	2	24316-240100	O-RING, 4DP10A	1							
18	1	119744-34850	GUIDE, DIPSTICK	1							
19	1	119744-34860	DIPSTICK, OIL	1							
20	1	26106-100222	BOLT, M10X 22 PLATED	1							
22	1	119717-32060	O-RING, P15.0	1							
23	1	119744-35070	PIPE ASSY, OIL INLET	1							
24	1	26106-060352	BOLT, M6X 35 PLATED	1							
25	1	26106-060652	BOLT, M6X 65 PLATED	1							
26	1	119305-35151	FILTER ASSY, D68XL65	1							1

Remarks
(1)Spare parts.

N:Old ←Yes/No→ New. Q:Old ←No/Yes→ New. R:Old ←Yes/Yes→ New. S:Old ←No/No→ New. W:Add. Z:Discontinued. F:Interchangeable by set. K:Q'ty Change

Copyright (C) 2020 YANMAR GLOBAL CS CO., LTD. All RightsReserved.

Fig.11. LUB. OIL PIPE

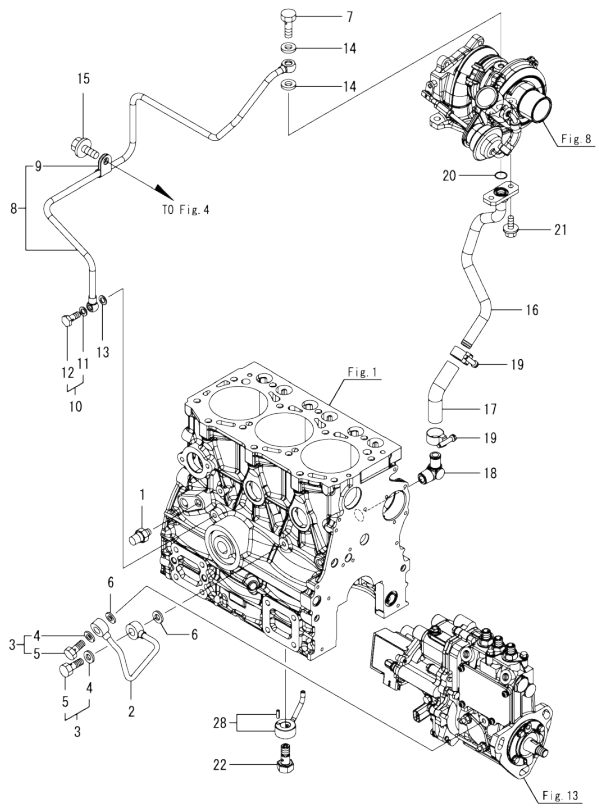

(A)=3TNV80FT-ZMWM2 (D)=
(B)= (E)=
(C)= (F)=

No.	Lev.	Parts No.	Description	Q'ty (A)	(B)	(C)	(D)	(E)	(F)	I	R
1	1	124298-39450	SWITCH, HYDRAULIC	1							
2	1	119717-39210	PIPE, PUMP	1							
3	1	129005-59830	BOLT ASSY, JOINT M8	2							
4	2	22190-080002	WASHER, SEAL 8	2							
5	2	23857-030000	BOLT, JOINT 3	2							
6	1	22190-080002	WASHER, SEAL 8	2							
7	1	121252-39150	BOLT, JOINT M10X1.5	1							
8	1	119E11-39450	PIPE ASSY, LO	1							
9	2	124223-39900	RETAINER	1							
10	1	129005-59830	BOLT ASSY, JOINT M8	1							
11	2	22190-080002	WASHER, SEAL 8	1							
12	2	23857-030000	BOLT, JOINT 3	1							
13	1	22190-080002	WASHER, SEAL 8	1							
14	1	23414-100000	GASKET, 10X1.0	2							
15	1	26106-080122	BOLT, M8X 12 PLATED	1							
16	1	119E11-39600	PIPE, LO RETURN T/C	1							
17	1	129044-39610	JOINT, RUBBER	1							
18	1	129466-49300	ELBOW, PT3/8	1							
19	1	23000-022000	CLAMP, 22	2							
20	1	24316-000160	O-RING, 4DP16.0	1							
21	1	26106-060162	BOLT, M6X 16 PLATED	2							
22	1	119E11-39410	VALVE ASSY, CHECK	3							
28	1	119E11-39660	NOZZLE ASSY, PISTON	3							

N:Old ←Yes/No→ New. Q:Old ←No/Yes→ New. R:Old ←Yes/Yes→ New. S:Old ←No/No→ New. W:Add. Z:Discontinued. F:Interchangeable by set. K:Q'ty Change

Copyright (C) 2020 YANMAR GLOBAL CS CO., LTD. All RightsReserved.

Fig.12. COOLING WATER SYSTEM

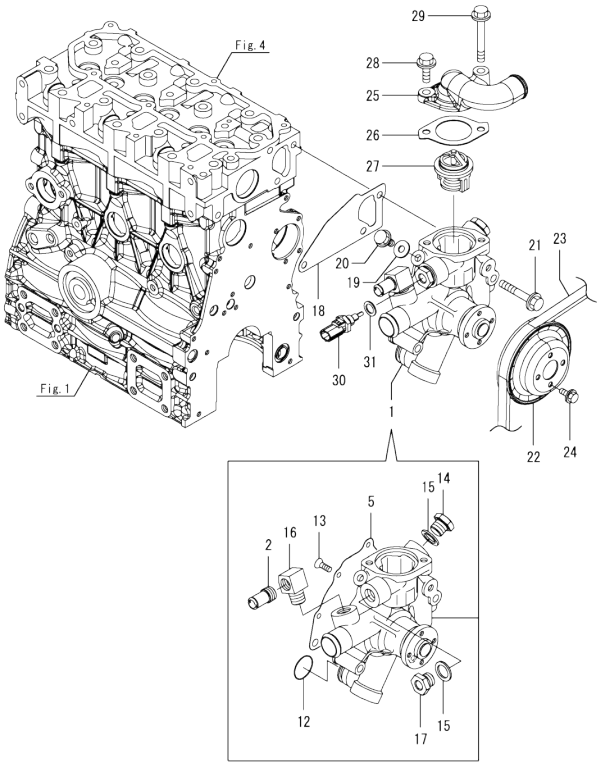

(A)=3TNV80FT-ZMWM2
(B)=
(C)=
(D)=
(E)=
(F)=

No.	Lev.	Parts No.	Description	Q'ty (A)	(B)	(C)	(D)	(E)	(F)	I	R
1	1	119E33-42000	PUMP ASSY, CW	1							
2	2	121851-11970	JOINT, PIPE 3/8	1							
5	2	119751-42030	GASKET, WATER PUMP	1							
12	2	119C10-42320	O-RING, 2028	1							
13	2	26577-060122	SCREW, M6X12	5							
14	2	121450-42450	PLUG, M16	1							
15	2	124465-44950	GASKET, 16	2							
16	2	119751-49310	JOINT, WATER RETURN	1							
17	2	129974-49350	JOINT, SENSOR	1							
18	1	119717-42020	GASKET, WATER PUMP	1							
19	1	23414-080000	GASKET, 8X1.0	1							
20	1	26106-080122	BOLT, M8X 12 PLATED	1							
21	1	26106-080502	BOLT, M8X 50 PLATED	3							
22	1	119740-42350	V-PULLEY, PUMP D=90	1							
23	1	129044-42290	V-BELT, A38.5	1							
24	1	26106-060122	BOLT, M6X 12 PLATED	4							
25	1	129A33-49530	COVER, THERMOSTAT	1							
26	1	129795-49551	GASKET, COVER	1							
27	1	119718-49800	THERMOSTAT, 82C	1							
28	1	26106-080222	BOLT, M8X 22 PLATED	1							
29	1	26106-080502	BOLT, M8X 50 PLATED	1							
30	1	129927-44900	SENSOR, TEMPERATURE	1							
31	1	22190-120002	WASHER, SEAL 12	1							

N:Old ◄Yes/No► New. Q:Old ◄No/Yes► New. R:Old ◄Yes/Yes► New. S:Old ◄No/No► New. W:Add. Z:Discontinued. F:Interchangeable by set. K:Q'ty Change

Copyright (C) 2020 YANMAR GLOBAL CS CO., LTD. All RightsReserved.

Fig.13. FUEL INJECTION PUMP

(A)=3TNV80FT-ZMWM2
(B)=
(C)=
(D)=
(E)=
(F)=

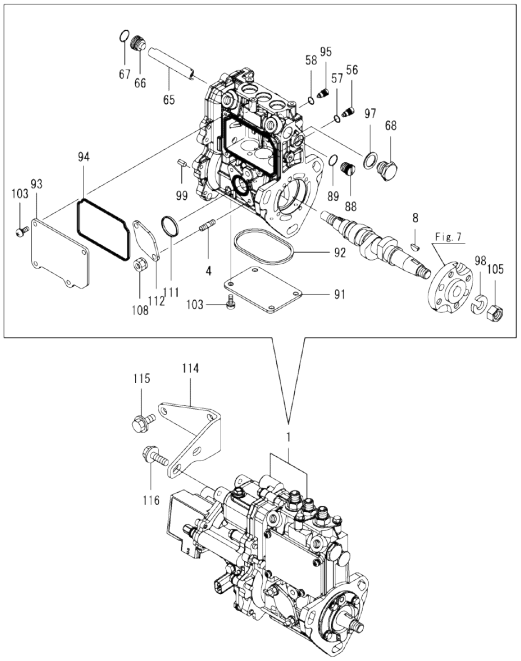

No.	Lev.	Parts No.	Description	Q'ty (A)	(B)	(C)	(D)	(E)	(F)	I	R
1	1	719E33-51310	FIE ASSY	1							1
4	2	129155-51020	STUD	2							
8	2	122710-51090	KEY, FEATHER	1							
56	2	158600-51270	STOPPER, TAPPET	3							
57	2	129155-51280	O-RING, S6	3							
58	2	129155-51280	O-RING, S6	1							
65	2	129155-51400	PROTECTOR	1							
66	2	158600-51410	PLUG, DEFLIFTER M12	1							
67	2	119717-51420	O-RING	1							
68	2	158600-51420	PLUG, DEFLIFTER M16	1							
88	2	158600-51570	PLUG, RACK	1							
89	2	129155-51580	O-RING	1							
91	2	129155-51701	COVER, PUMP BOTTOM	1							
92	2	119717-51711	GASKET, PUMP	1							
93	2	119717-51750	COVER, BODY SIDE	1							
94	2	119717-51761	GASKET, PUMP COVER	1							
95	2	158600-51790	STOPPER, RACK	1							
97	2	22190-160002	WASHER, SEAL 16	1							
98	2	22217-120000	WASHER, SPRING 12	1							
99	2	22351-050010	PIN, SPRING 5.0X10	2							
103	2	26022-050122	SCREW, M5X12	8							
105	2	26716-120002	NUT, M12	1							
108	2	119717-51860	NUT, M6	2							
111	2	129155-52051	GASKET, PUMP COVER	1							
112	2	129100-52200	COVER, FEED PUMP	1							
114	1	119E11-51200	SUPPORT, FOP	1							
115	1	26106-080142	BOLT, M8X 14 PLATED	2							
116	1	26106-080202	BOLT, M8X 20 PLATED	2							

Remarks
(1)Governor(Fig.13) is incorporated in this Fuel Injection Pump(No.1).
Eco pump
Make sure to update the engines ECU information when replacing the Eco pump.
Failing to do so will result in engine malfunction.

N:Old ←Yes/No→ New. Q:Old ←No/Yes→ New. R:Old ←Yes/Yes→ New. S:Old ←No/No→ New. W:Add. Z:Discontinued. F:Interchangeable by set. K:Q'ty Change

Copyright (C) 2020 YANMAR GLOBAL CS CO., LTD. All RightsReserved.

Fig.14. GOVERNOR

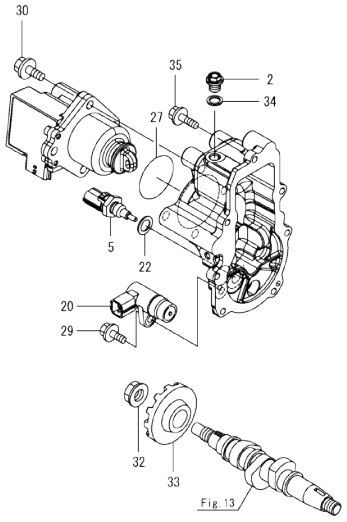

Remarks
* This figure(Governor) is incorporated in the Fuel Injection Pump(Fig.13).

(A)=3TNV80FT-ZMWM2
(B)=
(C)=
(D)=
(E)=
(F)=

No.	Lev.	Parts No.	Description	Q'ty (A)	(B)	(C)	(D)	(E)	(F)	I	R
2	2	119717-51930	PLUG, M10	1							
5	2	119E11-39440	SENSOR, OIL TEMP	1							
20	2	158557-61720	SENSOR, ROTATION	1							
22	2	22190-120002	WASHER, SEAL 12	1							
27	2	24341-000480	O-RING, 1AS48.0	1							
29	2	26106-060162	BOLT, M6X 16 PLATED	1							
30	2	26106-080252	BOLT, M8X 25 PLATED	3							
32	2	129008-61301	NUT, SUPPORT	1							
33	2	119E11-61780	GEAR	1							
34	2	22190-100002	WASHER, SEAL 10	1							
35	2	26106-060202	BOLT, M6X 20 PLATED	7							

N:Old ◄Yes/No► New. Q:Old ◄No/Yes► New. R:Old ◄Yes/Yes► New. S:Old ◄No/No► New. W:Add. Z:Discontinued. F:Interchangeable by set. K:Q'ty Change

Copyright (C) 2020 YANMAR GLOBAL CS CO., LTD. All RightsReserved.

Fig.15. FUEL INJECTION VALVE

(A)=3TNV80FT-ZMWM2
(B)=
(C)=
(D)=
(E)=
(F)=

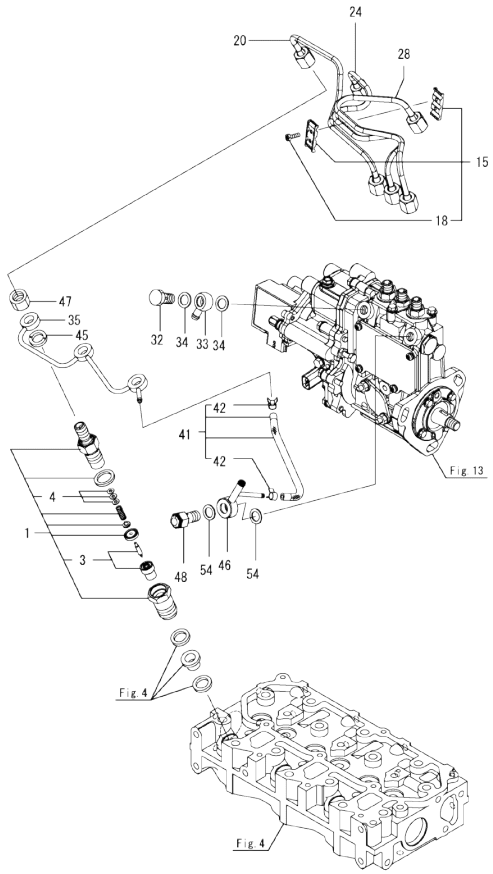

No.	Lev.	Parts No.	Description	Q'ty (A)	(B)	(C)	(D)	(E)	(F)	I	R
1	1	119C10-53000	VALVE ASSY,INJECTION	3							
3	2	119C10-53010	VALVE ASSY,INJECTION	3							
4	2	129901-53800	SHIM SET, ADJUSTING	3							1
15	1	129150-59120	RETAINER, PIPE	1							
18	2	129150-59131	BOLT, M4X14	2							
20	1	119E10-59810	PIPE ASSY, INJECTION	1							
24	1	119E10-59820	PIPE, INJECTION NO.2	1							
28	1	119E10-59830	PIPE, INJECTION NO.3	1							
32	1	103854-39140	BOLT, PIPE JOINT	1							
33	1	101304-59020	JOINT, PIPE 12	1							
34	1	22190-120002	WASHER, SEAL 12	2							
35	1	119E11-59510	PIPE ASSY, FO RETURN	1							
41	1	119744-59560	HOSE ASSY, RETURN	1							
42	2	124066-59100	CLAMP, HOSE 8	2							
45	1	129901-59560	GASKET, FUEL RETURN	3							
46	1	119740-59590	JOINT, OVERFLOW	1							
47	1	119620-59700	NUT, NOZZLE RETURN	3							
48	1	119813-59950	VALVE ASSY, CHECK	1							
54	1	22190-120002	WASHER, SEAL 12	2							

Remarks
(1)Spare parts.

N:Old $\frac{\text{Yes}}{\text{No}}$ New. Q:Old $\frac{\text{No}}{\text{Yes}}$ New. R:Old $\frac{\text{Yes}}{\text{Yes}}$ New. S:Old $\frac{\text{No}}{\text{No}}$ New. W:Add. Z:Discontinued. F:Interchangeable by set. K:Q'ty Change

Copyright (C) 2020 YANMAR GLOBAL CS CO., LTD. All RightsReserved.

Fig.16. STARTER MOTOR

(A)=3TNV80FT-ZMWM2
(B)=
(C)=
(D)=
(E)=
(F)=

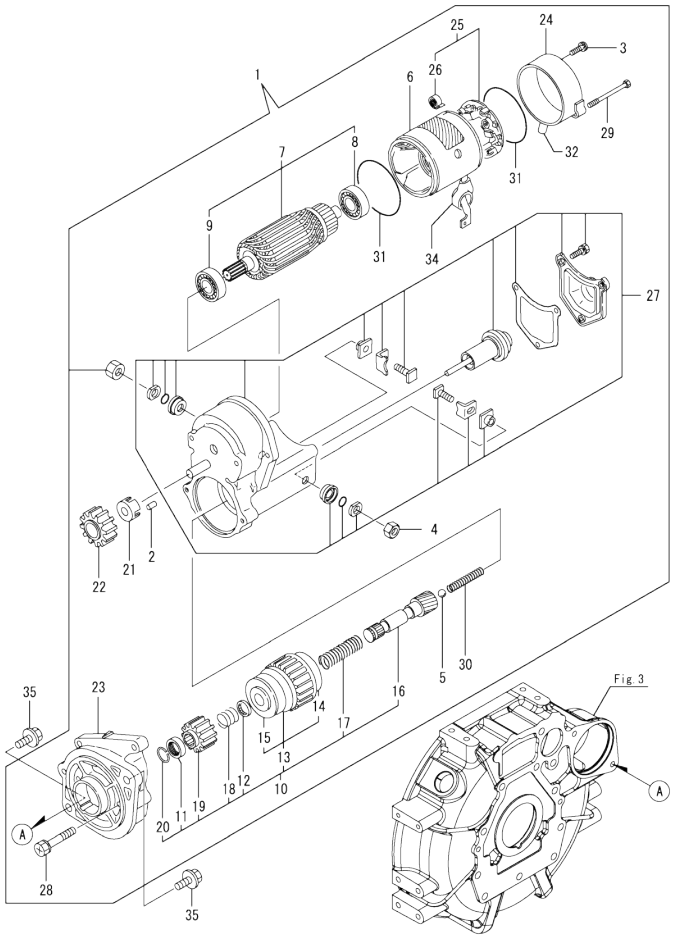

No.	Lev.	Parts No.	Description	Q'ty (A)	(B)	(C)	(D)	(E)	(F)	I	R
1	1	119740-77020	STARTER, RA1.4	1							
2	2	X0283060061	ROLLER	5							
3	2	129129-77460	SCREW	2							
4	2	X9490561370	NUT	1							
5	2	X9491200240	BALL, STEEL	1							
6	2	129407-77210	YOKE ASSY	1							
7	2	129407-77220	ARMATURE ASSY	1							
8	3	129129-77230	BEARING, BALL	1							
9	3	129129-77240	BEARING, BALL	1							
10	2	X1280996680	STARTER KIT	1							
11	3	X0280210230	NUT, PINION STOP	1							
12	3	X0283270140	RETAINER, SNAP	1							
13	3	129129-77390	CLUTCH ASSY, STARTER	1							
14	4	129129-77440	BEARING, BALL	1							
15	4	129129-77450	BEARING, BALL	1							
16	3	129129-77400	SHAFT, STARTER	1							
17	3	129129-77410	SPRING, COIL	1							
18	3	129407-77410	SPRING, COIL	1							
19	3	X0283712350	PINION, STARTER	1							
20	3	129129-77430	RING, SNAP	1							
21	2	129129-77260	RETAINER	1							
22	2	129129-77270	PINION	1							
23	2	X4284003310	HOUSING	1							
24	2	129407-77290	FRAME	1							
25	2	129407-77300	HOLDER ASSY	1							
26	3	X9491730461	SPRING, BRUSH	4							
27	2	X1534004151	SWITCH ASSY	1							
28	2	129129-77320	BOLT, W/WASHER	2							
29	2	129407-77330	BOLT	2							
30	2	129129-77340	SPRING	1							
31	2	129129-77350	O-RING	2							
32	2	129129-77362	COVER	1							
34	2	129129-77380	CAP	1							
35	1	26106-100252	BOLT, M10X 25 PLATED	2							

N:Old ←Yes/No→ New. Q:Old ←No/Yes→ New. R:Old ←Yes/Yes→ New. S:Old ←No/No→ New. W:Add. Z:Discontinued. F:Interchangeable by set. K:Q'ty Change

Copyright (C) 2020 YANMAR GLOBAL CS CO., LTD. All RightsReserved.

Fig.17. GENERATOR

(A)=3TNV80FT-ZMWM2
(B)=
(C)=
(D)=
(E)=
(F)=

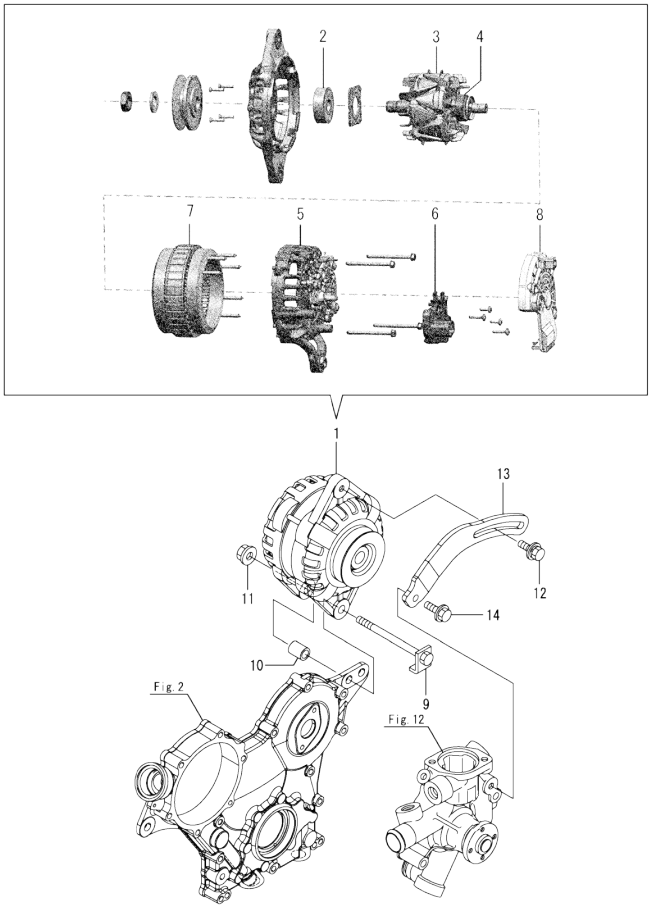

No.	Lev.	Parts No.	Description	Q'ty (A)	(B)	(C)	(D)	(E)	(F)	I	R
1	1	129908-77200	ALTERNATOR, 12V	1							
2	2	129908-77710	BEARING, BALL FR	1							
3	2	129908-77720	ROTOR	1							
4	2	129908-77730	BEARING, BALL RR	1							
5	2	129908-77740	RECTIFIER	1							
6	2	129908-77750	REGULATOR	1							
7	2	129908-77760	STATOR	1							
8	2	129908-77770	PROTECTOR	1							
9	1	129908-77220	BOLT, STOPPER M10	1							
10	1	129908-77360	PIECE, DISTANCE	1							
11	1	26306-100002	NUT, M10	1							
12	1	119810-77340	BOLT, ADJUSTER L=30	1							
13	1	119E33-77360	ADJUSTER	1							
14	1	26106-080202	BOLT, M8X 20 PLATED	1							

N:Old ←Yes/No→ New. Q:Old ←No/Yes→ New. R:Old ←Yes/Yes→ New. S:Old ←No/No→ New. W:Add. Z:Discontinued. F:Interchangeable by set. K:Q'ty Change

Copyright (C) 2020 YANMAR GLOBAL CS CO., LTD. All RightsReserved.

Fig.18. ELECTRONIC CONTROL UNIT(ECU)

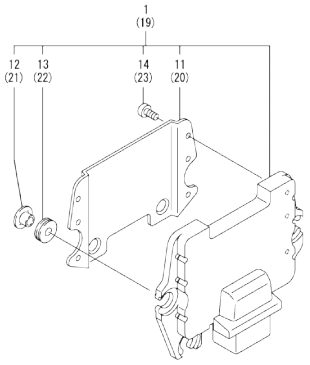

Remarks
(1)Eco ECU
This part cannot be ordered.
Replace the part using a Service ECU with the proper engine information installed.
(2)Service ECU
If the proper information is not installed, the engine will not operate.
To install proper information, go to an authorized distributor.

(A)=3TNV80FT-ZMWM2 (D)=
(B)= (E)=
(C)= (F)=

No.	Lev.	Parts No.	Description	Q'ty (A)	(B)	(C)	(D)	(E)	(F)	I	R
1	1	119E33-75030	ECU ASSY,380FT-ZMWM2	1							1
11	2	129927-77600	SHIELD, ECU	1							
12	2	129927-77680	COLLAR, CONTROLLER	3							
13	2	119578-91351	RUBBER, CONTROLLER	3							
14	2	22877-500080	SCREW, 5X 8	6							
19	1	129927-75901	ECU ASSY, SERVICE	1							2
20	2	129927-77600	SHIELD, ECU	1							
21	2	129927-77680	COLLAR, CONTROLLER	3							
22	2	119578-91351	RUBBER, CONTROLLER	3							
23	2	22877-500080	SCREW, 5X 8	6							

N:Old $\frac{\text{Yes}}{\text{No}}$ New. Q:Old $\frac{\text{No}}{\text{Yes}}$ New. R:Old $\frac{\text{Yes}}{\text{Yes}}$ New. S:Old $\frac{\text{No}}{\text{No}}$ New. W:Add. Z:Discontinued. F:Interchangeable by set. K:Q'ty Change

Copyright (C) 2020 YANMAR GLOBAL CS CO., LTD. All RightsReserved.

Fig.19. ACCESSORY

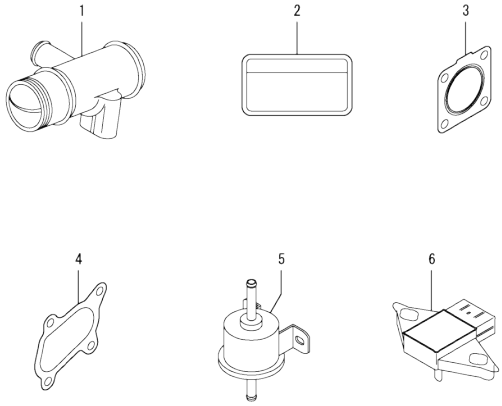

(A)=3TNV80FT-ZMWM2
(B)=
(C)=
(D)=
(E)=
(F)=

No.	Lev.	Parts No.	Description	Q'ty (A)	(B)	(C)	(D)	(E)	(F)	I	R
1	1	119E11-03050	JOINT,BREATHER	1							
2	1	114110-07761	LABEL, FUEL CAUTION	1							
3	1	119515-13200	GASKET, SILENCER	1							
4	1	129A01-18090	GASKET, TURBINE OUT	1							
5	1	119225-52102	PUMP, FUEL FEED	1							
6	1	129927-91200	SENSOR, PRESSURE	1							

N:Old ◄Yes/No► New. Q:Old ◄No/Yes► New, R:Old ◄Yes/Yes► New, S:Old ◄No/No► New. W:Add. Z:Discontinued. F:Interchangeable by set. K:Q'ty Change

Copyright (C) 2020 YANMAR GLOBAL CS CO., LTD. All RightsReserved.

Parts No. Index

Parts No.	Fig. No.	Ref. No.
101304-59020	15	33
103854-39140	15	32
105010-11490	4	3
105311-01090	1	4
105425-01690	3	9
114110-07761	19	2
119034-07900	4	61
119100-11330	4	49
119131-18320	8	3
119225-52102	19	5
119260-11270	4	26
119260-34810	10	16
119285-01990	1	6
119285-11990	4	11
119305-35151	10	26
119515-13200	19	3
119578-91351	18	13
		22
119600-11460	4	2
119620-01750	3	3
119620-02020	1	7
119620-11280	4	27
119620-14200	7	1
119620-59700	15	47
119621-21681	9	12
119623-01250	1	5
119624-32040	2	18
119660-01911	2	17
119717-01501	2	1
119717-01570	2	2
119717-01720	3	7
119717-01750	2	16
119717-01800	2	7
119717-02411	1	10
119717-02930	1	23
119717-03031	4	36
119717-03070	4	37
		38
119717-11131	4	15
119717-11190	4	17
119717-11200	4	21
119717-11240	4	22
119717-11260	4	25
119717-11331	4	50
119717-11340	4	18
119717-11350	4	19
119717-11650	4	28
119717-11800	4	67
119717-13110	6	2
119717-14400	7	2

Parts No.	Fig. No.	Ref. No.
119717-14581	7	3
119717-21200	9	4
119717-23200	9	27
119717-23601	9	28
119717-23611	9	31
119717-23911	9	30
119717-25050	7	9
119717-25101	7	10
119717-25911	7	16
119717-25930	7	15
119717-32050	2	19
119717-32060	10	22
119717-32080	2	9
119717-32100	2	8
119717-32110	2	13
119717-32120	2	14
119717-33010	10	1
119717-39210	11	2
119717-42020	12	18
119717-51150	7	17
119717-51420	13	67
119717-51711	13	92
119717-51750	13	93
119717-51761	13	94
119717-51860	13	108
119717-51930	14	2
119717-77801	4	65
119717-77820	4	66
119718-11310	4	45
119718-49800	12	27
119734-01580	2	3
119734-02220	3	4
119740-42350	12	22
119740-59590	15	46
119740-77020	16	1
119744-01521	2	5
119744-34850	10	18
119744-34860	10	19
119744-35070	10	23
119744-59560	15	41
119746-01780	3	8
119751-42030	12	5
119751-49310	12	16
119802-03100	4	39
119802-03110	4	40
119802-03121	4	41
119802-03131	4	42
119802-03141	4	43
119802-13661	6	4
119802-32130	2	15

Parts No.	Fig. No.	Ref. No.
119810-01200	1	26
119810-02941	1	34
119810-77340	17	12
119813-59950	15	48
119865-21600	9	10
119C10-21931	9	13
119C10-21940	9	14
119C10-42320	12	12
119C10-53000	15	1
119C10-53010	15	3
119C40-21650	9	11
119E10-01330	1	27
119E10-11100	4	13
119E10-11110	4	14
119E10-21590	9	8
119E10-21700	9	1
119E10-22300	9	22
119E10-22500	9	18
119E10-22550	9	34
119E10-23001	9	24
119E10-59810	15	20
119E10-59820	15	24
119E10-59830	15	28
119E11-01150	1	1
119E11-03050	19	1
119E11-11320	4	46
119E11-11390	4	35
119E11-11740	4	4
119E11-13100	6	1
119E11-22080	9	16
119E11-22900	9	33
119E11-35140	10	4
119E11-39410	11	22
119E11-39440	14	5
119E11-39450	11	8
119E11-39600	11	16
119E11-39660	11	28
119E11-49010	10	6
119E11-51200	13	114
119E11-59510	15	35
119E11-61780	14	33
119E33-01610	3	2
119E33-07900	4	58
119E33-07910	4	62
119E33-07920	4	60
119E33-12010	5	1
119E33-42000	12	1
119E33-75030	18	1
119E33-77360	17	13
121023-01551	2	30

Parts No.	Fig. No.	Ref. No.
121111-21501	9	7
121252-39150	11	7
121450-42450	12	14
121850-51960	2	20
121851-11970	12	2
122710-51090	13	8
124060-01050	1	11
124066-59100	15	42
124160-01751	2	28
	4	34
124160-01910	1	12
124223-39900	11	9
124298-39450	11	1
124465-44950	12	15
129001-32320	2	11
129001-32330	2	12
129005-59830	11	3
		10
129006-44480	10	5
129008-61301	14	32
129044-39610	11	17
129044-42290	12	23
129100-01580	3	1
	9	2
129100-52200	13	112
129129-77230	16	8
129129-77240	16	9
129129-77260	16	21
129129-77270	16	22
129129-77320	16	28
129129-77340	16	30
129129-77350	16	31
129129-77362	16	32
129129-77380	16	34
129129-77390	16	13
129129-77400	16	16
129129-77410	16	17
129129-77430	16	20
129129-77440	16	14
129129-77450	16	15
129129-77460	16	3
129150-11230	4	29
129150-11750	4	31
129150-25301	7	14
129150-59120	15	15
129150-59131	15	18
129155-51020	13	4
129155-51280	13	57
		58
129155-51400	13	65

Parts No. Index

Parts No.	Fig. No.	Ref. No.
129155-51580	13	89
129155-51701	13	91
129155-52051	13	111
129407-77210	16	6
129407-77220	16	7
129407-77290	16	24
129407-77300	16	25
129407-77330	16	29
129407-77410	16	18
129417-33111	10	3
129418-18320	6	5
129466-49300	11	18
129508-11180	4	16
129508-33050	10	2
129657-49020	10	10
129657-49180	10	13
129795-49551	12	26
129900-32130	2	10
129901-11450	4	1
129901-53800	15	4
129901-59560	15	45
129908-77200	17	1
129908-77220	17	9
129908-77360	17	10
129908-77710	17	2
129908-77720	17	3
129908-77730	17	4
129908-77740	17	5
129908-77750	17	6
129908-77760	17	7
129908-77770	17	8
129927-44900	12	30
129927-75901	18	19
129927-77600	18	11
		20
129927-77680	18	12
		21
129927-91200	19	6
129974-49350	12	17
129A01-18011	8	1
129A01-18080	8	2
129A01-18090	19	4
129A33-49530	12	25
129E00-13610	6	3
158557-61720	14	20
158600-51270	13	56
158600-51410	13	66
158600-51420	13	68
158600-51570	13	88
158600-51790	13	95

Parts No.	Fig. No.	Ref. No.
171008-03990	10	7
		11
171056-49120	10	15
22190-080002	11	4
		6
		11
		13
22190-100002	14	34
22190-120002	12	31
	14	22
	15	34
		54
22190-160002	3	11
	13	97
22217-120000	13	98
22242-000120	4	32
22252-000220	9	23
22351-050010	13	99
22351-060012	4	20
22512-040120	9	5
		15
22857-500100	4	51
		52
22857-500160	4	53
22877-500080	18	14
		23
23000-022000	11	19
23000-048000	5	2
23000-054000	5	3
23080-015000	10	9
		14
23414-080000	12	19
23414-100000	11	14
23857-030000	11	5
		12
23876-005000	4	12
23876-030000	2	6
24311-000320	2	29
	4	54
24316-000160	11	20
24316-240100	10	17
24341-000240	2	31
24341-000480	14	27
26022-050122	13	103
26106-060122	2	21
	7	8
	12	24
26106-060162	2	22
		32
	11	21

Parts No.	Fig. No.	Ref. No.
26106-060162	14	29
26106-060202	4	55
	14	35
26106-060352	7	13
	10	24
26106-060402	2	23
		24
26106-060602	2	25
26106-060652	2	26
	10	25
26106-060752	4	56
26106-060852	4	57
26106-080122	3	12
	11	15
	12	20
26106-080142	13	115
26106-080162	4	59
		63
26106-080202	13	116
	17	14
26106-080222	12	28
26106-080252	14	30
26106-080302	3	13
26106-080402	4	33
26106-080452	3	14
26106-080502	3	15
	12	21
		29
26106-080752	4	64
26106-100222	10	20
26106-100252	16	35
26206-100252	3	5
26206-100302	3	6
26306-080002	2	27
	8	4
26306-100002	17	11
26577-060122	12	13
26716-120002	13	105
27241-120000	1	13
719717-02901	1	28
719717-02911	1	31
719734-01510	2	4
719E33-51310	13	1
X0280210230	16	11
X0283060061	16	2
X0283270140	16	12
X0283712350	16	19
X1280996680	16	10
X1534004151	16	27
X4284003310	16	23

Parts No.	Fig. No.	Ref. No.
X9490561370	16	4
X9491200240	16	5
X9491730461	16	26