YANMAR

PARTS CATALOG

0CD50-M06370EN

Last update Apr., 2021

PREFACE

This parts catalog is the 1st edition of 3TNV80FT-ZMYA.

Published : October, 2020

Contents

0CD50-M06370

Fig. No.	Fig. Name
ENGINE	
1.	CYLINDER BLOCK
2.	GEAR HOUSING
3.	FLYWHEEL HOUSING & OIL SUMP
4.	CYLINDER HEAD & BONNET
5.	SUCTION MANIFOLD
6.	EXHAUST MANIFOLD
7.	CAMSHAFT & DRIVING GEAR
8.	TURBINE
9.	CRANKSHAFT & PISTON
10.	LUB. OIL SYSTEM
11.	LUB. OIL PIPE
12.	COOLING WATER SYSTEM
13.	FUEL INJECTION PUMP
14.	GOVERNOR
15.	FUEL INJECTION VALVE
16.	STARTER MOTOR
17.	GENERATOR
18.	ELECTRONIC CONTROL UNIT(ECU)
19.	ACCESSORY

Fig.1. CYLINDER BLOCK

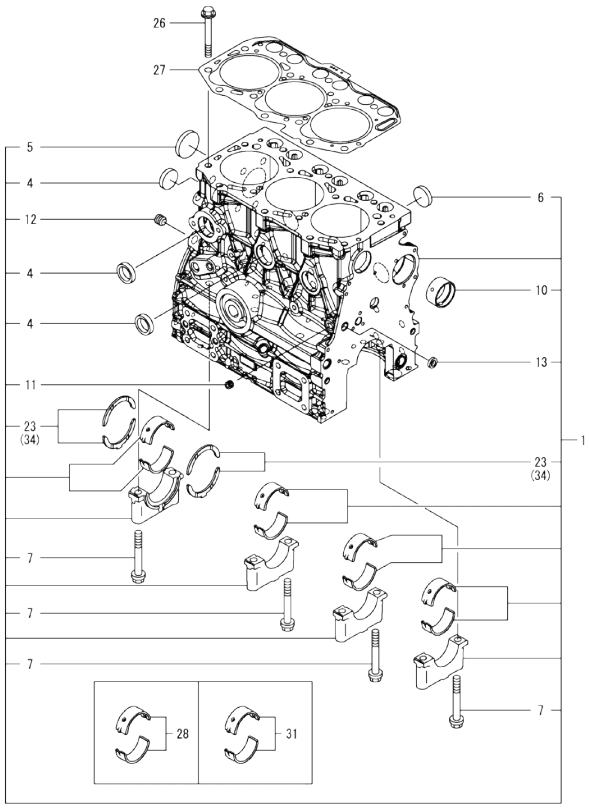

Remarks
(1)Spare parts.
(2)Under-sized(U.S.=0.25) parts.
(3)Over-sized(O.S.=0.25) parts.

(A)=3TNV80FT-ZMYA
(B)=
(C)=
(D)=
(E)=
(F)=

No.	Lev.	Parts No.	Description	Q'ty (A)	(B)	(C)	(D)	(E)	(F)	I	R
1	1	119E00-01560	BLOCK ASSY, CYLINDER	1							
4	2	105311-01090	PLUG, 30	4							
5	2	119623-01250	PLUG, 45	1							
6	2	119285-01990	PLUG, 25	3							
7	2	119620-02020	BOLT, METAL CAP	8							
10	2	119717-02411	BUSH, CAMSHAFT	1							
11	2	124060-01050	PLUG, PT1/8	1							
12	2	124160-01910	PLUG, PT1/4	1							
13	2	27241-120000	PLUG, 12	1							
23	2	119717-02930	METAL ASSY, THRUST	2							
26	1	119810-01200	BOLT, CYLINDER HEAD	14							
27	1	119E10-01330	GASKET SET, HEAD	1							
28	1	719717-02901	METAL ASSY, MAIN	4							1
31	1	719717-02911	METAL ASSY, MAIN .25	4							2
34	1	119810-02941	METAL ASSY, 0.25 OS	2							3

N:Old ←Yes/No→ New. Q:Old ←No/Yes→ New. R:Old ←Yes/Yes→ New. S:Old ←No/No→ New. W:Add. Z:Discontinued. F:Interchangeable by set. K:Q'ty Change

Copyright (C) 2020 YANMAR GLOBAL CS CO., LTD. All RightsReserved.

Fig.2. GEAR HOUSING

(A)=3TNV80FT-ZMYA
(B)=
(C)=
(D)=
(E)=
(F)=

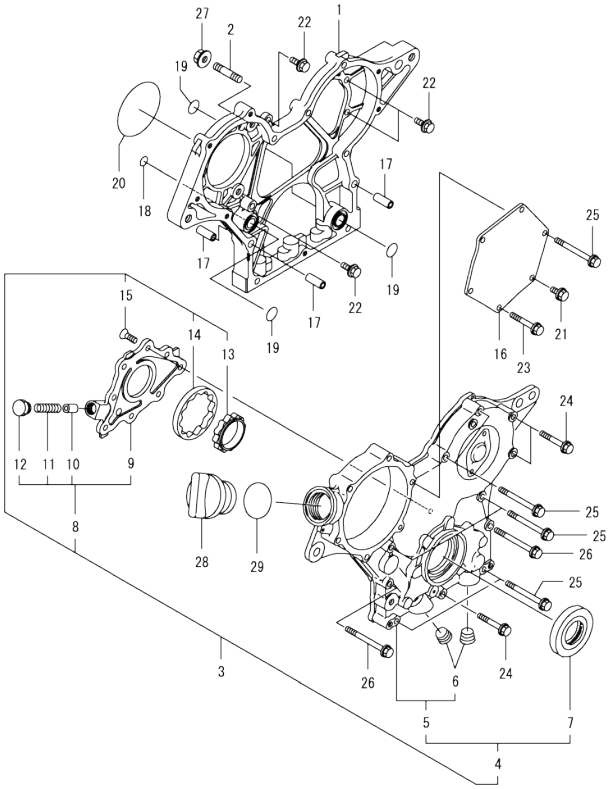

No.	Lev.	Parts No.	Description	Q'ty (A)	(B)	(C)	(D)	(E)	(F)	I	R
1	1	119717-01501	CASE, GEAR	1							
2	1	119717-01570	STUD	3							
3	1	119734-01590	COVER ASSY, CASE	1							
4	2	719734-01500	COVER ASSY, CASE	1							
5	3	119717-01521	COVER, GEAR CASE	1							
6	4	23876-030000	PLUG, R03	2							
7	3	119717-01800	SEAL, OIL	1							
8	2	119717-32100	COVER ASSY, PUMP	1							
9	3	119717-32080	COVER, OIL PUMP	1							
10	3	129900-32130	VALVE, RELIEF	1							
11	3	129001-32320	SPRING	1							
12	3	129001-32330	PLUG	1							
13	2	119717-32110	ROTOR, INNER	1							
14	2	119717-32120	ROTOR, OUTER	1							
15	2	119802-32130	SCREW, M6X16	8							
16	1	119717-01750	COVER, PUMP	1							
17	1	119660-01911	PIPE, KNOCK 6X17	4							
18	1	119624-32040	O-RING, P12.0	1							
19	1	119717-32050	O-RING, P17.0	3							
20	1	121850-51960	O-RING, FUEL PUMP	1							
21	1	26106-060122	BOLT, M6X 12 PLATED	1							
22	1	26106-060162	BOLT, M6X 16 PLATED	4							
23	1	26106-060402	BOLT, M6X 40 PLATED	4							
24	1	26106-060402	BOLT, M6X 40 PLATED	3							
25	1	26106-060602	BOLT, M6X 60 PLATED	7							
26	1	26106-060652	BOLT, M6X 65 PLATED	2							
27	1	26306-080002	NUT, M8	3							
28	1	124160-01751	CAP, FILLER	1							
29	1	24311-000320	O-RING, 1AP32.0	1							

N:Old ←Yes/No→ New. Q:Old ←No/Yes→ New. R:Old ←Yes/Yes→ New. S:Old ←No/No→ New. W:Add. Z:Discontinued. F:Interchangeable by set. K:Q'ty Change

Copyright (C) 2020 YANMAR GLOBAL CS CO., LTD. All RightsReserved.

Fig.3. FLYWHEEL HOUSING & OIL SUMP

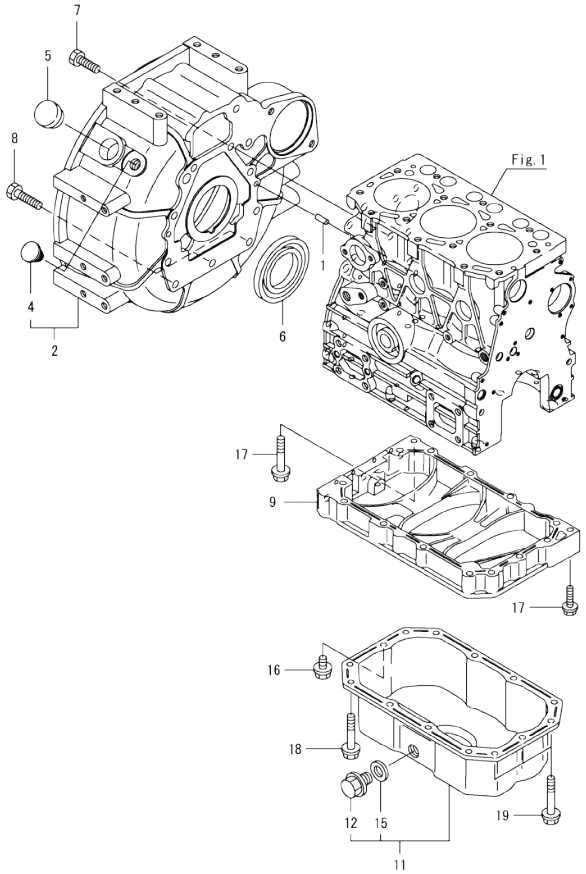

(A)=3TNV80FT-ZMYA (D)=
(B)= (E)=
(C)= (F)=

No.	Lev.	Parts No.	Description	Q'ty (A)	(B)	(C)	(D)	(E)	(F)	I	R
1	1	129100-01580	PIN, PARALLEL 8X16	2							
2	1	119717-01611	HOUSING, FLYWHEEL	1							
4	2	119888-01850	PLUG, RUBBER 19	1							
5	1	119620-01750	CAP, WHEEL COVER	1							
6	1	119734-02220	SEAL, OIL WHEEL SIDE	1							
7	1	26206-100252	BOLT, M10X 25 PLATED	8							
8	1	26206-100302	BOLT, M10X 30 PLATED	3							
9	1	119717-01720	SPACER, OIL PAN	1							
11	1	119717-01770	OIL PAN ASSY	1							
12	2	105425-01690	PLUG, DRAIN M16	1							
15	2	22190-160002	WASHER, SEAL 16	1							
16	1	26106-080122	BOLT, M8X 12 PLATED	1							
17	1	26106-080302	BOLT, M8X 30 PLATED	1							
18	1	26106-080452	BOLT, M8X 45 PLATED	11							
19	1	26106-080502	BOLT, M8X 50 PLATED	3							

N:Old ←Yes/No→ New. Q:Old ←No/Yes→ New. R:Old ←Yes/Yes→ New. S:Old ←No/No→ New. W:Add. Z:Discontinued. F:Interchangeable by set. K:Q'ty Change

Copyright (C) 2020 YANMAR GLOBAL CS CO., LTD. All RightsReserved.

Fig.4. CYLINDER HEAD & BONNET

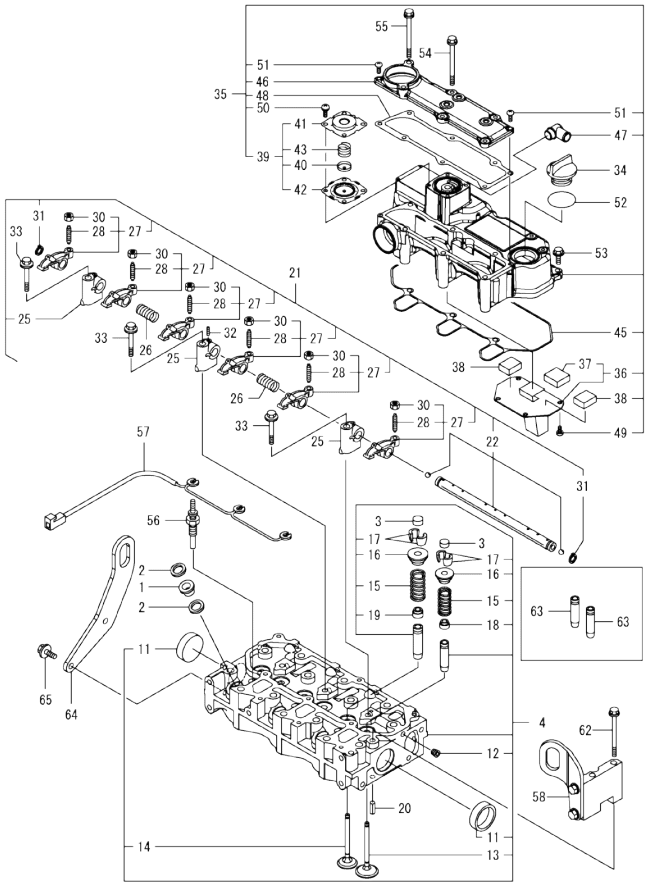

Remarks
(1)Spare parts.

(A)=3TNV80FT-ZMYA
(B)=
(C)=
(D)=
(E)=
(F)=

No.	Lev.	Parts No.	Description	Q'ty (A)	(B)	(C)	(D)	(E)	(F)	I	R
1	1	129901-11450	PROTECTOR, NOZZLE	3							
2	1	119600-11460	GASKET, NOZZLE	6							
3	1	105010-11490	CAP, VALVE	6							
4	1	119E11-11740	HEAD ASSY, CYLINDER	1							
11	2	119285-11990	PLUG, 35	2							
12	2	23876-005000	PLUG, R005	1							
13	2	119E10-11100	VALVE, INTAKE	3							
14	2	119E10-11110	VALVE, EXHAUST	3							
15	2	119717-11131	SPRING, VALVE	6							
16	2	129508-11180	RETAINER, SPRING	6							
17	2	119717-11190	COTTER, VALVE	12							
18	2	119717-11340	SEAL, VALVE STEM	3							
19	2	119717-11350	SEAL, VALVE STEM	3							
20	1	22351-060012	PIN, SPRING 6.0X12	2							
21	1	119717-11200	SUPPORT ASSY, ROCKER	1							
22	2	119717-11240	SHAFT ASSY, ARM	1							
25	2	119717-11260	SUPPORT, ROCKER ARM	3							
26	2	119620-11280	SPRING, SHAFT	2							
27	2	119717-11650	ARM ASSY, ROCKER INT	6							
28	3	129150-11230	SCREW, VALVE ADJUST	6							
30	3	129150-11750	NUT, M8XP1.0	6							
31	2	22242-000120	RING, 12	2							
32	2	119260-11270	SCREW	1							
33	1	26106-080402	BOLT, M8X 40 PLATED	3							
34	1	124160-01751	CAP, FILLER	1							
35	1	119E11-11390	BONNET ASSY	1							
36	2	119717-03031	PLATE, BAFFLE	1							
37	3	119717-03070	BAFFLE, BREATHER	1							
38	2	119717-03070	BAFFLE, BREATHER	2							
39	2	119802-03100	DIAPHRAGM ASSY	1							
40	3	119802-03110	PLATE, DIAPHRAGM	1							
41	3	119802-03121	COVER, DIAPHRAGM	1							
42	3	119802-03131	DIAPHRAGM, BREATHER	1							
43	3	119802-03141	SPRING, DIAPHRAGM	1							
45	2	119718-11310	GASKET, BONNET	1							
46	2	119E11-11320	COVER ASSY, BONNET	1							
47	2	119100-11330	ELBOW, BREATHER	1							
48	2	119717-11331	GASKET, BONNET COVER	1							
49	2	22857-500100	SCREW, 5X10	4							
50	2	22857-500100	SCREW, 5X10	4							
51	2	22857-500160	SCREW, 5X16	2							
52	1	24311-000320	O-RING, 1AP32.0	1							
53	1	26106-060202	BOLT, M6X 20 PLATED	3							
54	1	26106-060752	BOLT, M6X 75 PLATED	4							
55	1	26106-060852	BOLT, M6X 85 PLATED	2							
56	1	119717-77801	PLUG, GLOW	3							
57	1	119717-77820	CONNECTOR, GLOW PLUG	1							
58	1	119E33-07920	LIFTER ASSY	1							
62	1	26106-080752	BOLT, M8X 75 PLATED	2							
63	1	119717-11800	GUIDE, VALVE	6							1
64	1	119E33-07900	LIFTER, ENGINE	1							

N:Old ←Yes/No→ New. Q:Old ←No/Yes→ New. R:Old ←Yes/Yes→ New. S:Old ←No/No→ New. W:Add. Z:Discontinued. F:Interchangeable by set. K:Q'ty Change

++ CONTINUE ++

Copyright (C) 2020 YANMAR GLOBAL CS CO., LTD. All RightsReserved.

Fig.4. CYLINDER HEAD & BONNET

(A)=3TNV80FT-ZMYA
(B)=
(C)=
(D)=
(E)=
(F)=

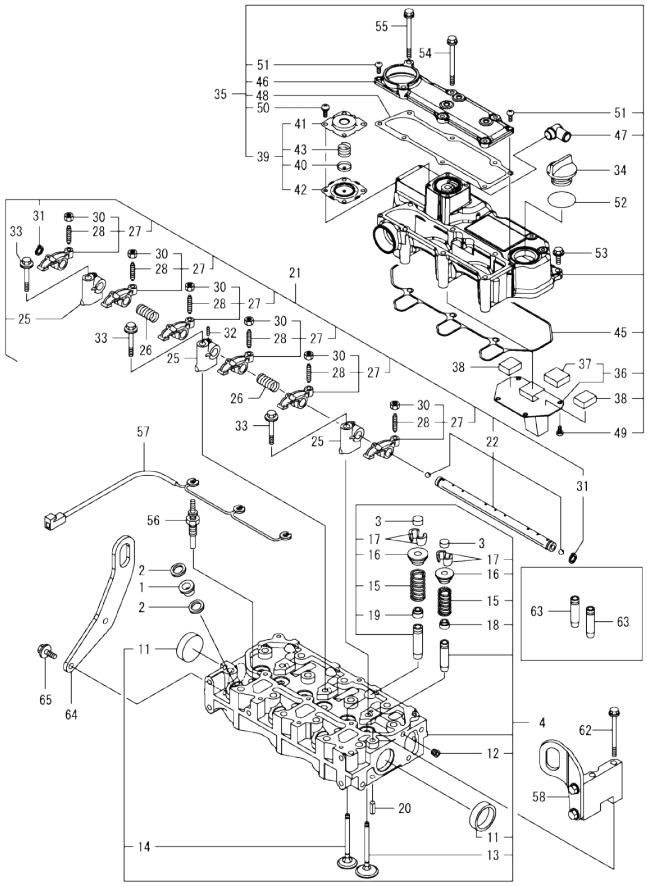

No.	Lev.	Parts No.	Description	Q'ty (A)	(B)	(C)	(D)	(E)	(F)	I	R
65	1	26106-080162	BOLT, M8X 16 PLATED	2							

Remarks
(1)Spare parts.

N:Old ◄Yes/No► New. Q:Old ◄No/Yes► New. R:Old ◄Yes/Yes► New. S:Old ◄No/No► New. W:Add. Z:Discontinued. F:Interchangeable by set. K:Q'ty Change

Copyright (C) 2020 YANMAR GLOBAL CS CO., LTD. All RightsReserved.

Fig.5. SUCTION MANIFOLD

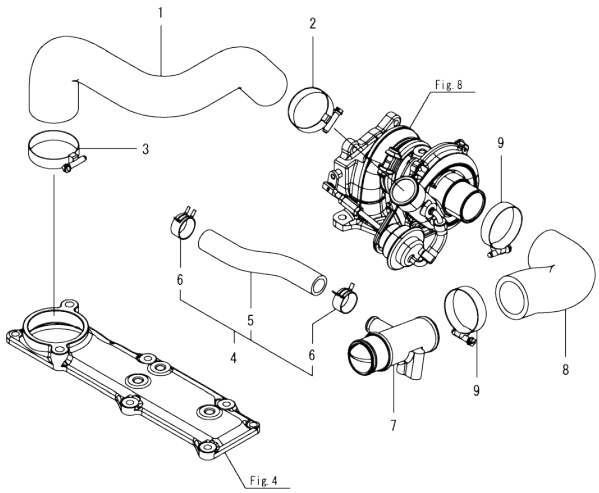

(A)=3TNV80FT-ZMYA
(B)=
(C)=
(D)=
(E)=
(F)=

No.	Lev.	Parts No.	Description	Q'ty (A)	(B)	(C)	(D)	(E)	(F)	I	R
1	1	119E11-12010	HOSE, AIR INTAKE	1							
2	1	23000-048000	CLAMP, 48	1							
3	1	23000-054000	CLAMP, 54	1							
4	1	119E33-03000	HOSE ASSY, BREATHER	1							
5	2	119E33-03010	HOSE, BREATHER	1							
6	2	129410-03990	CLAMP, HOSE 21.5	2							
7	1	119E11-03050	JOINT,BREATHER	1							
8	1	119E33-12070	HOSE, AIR INTAKE	1							
9	1	23000-054000	CLAMP, 54	2							

N:Old ◄Yes/No► New. Q:Old ◄No/Yes► New. R:Old ◄Yes/Yes► New. S:Old ◄No/No► New. W:Add. Z:Discontinued. F:Interchangeable by set. K:Q'ty Change

Copyright (C) 2020 YANMAR GLOBAL CS CO., LTD. All RightsReserved.

Fig.6. EXHAUST MANIFOLD

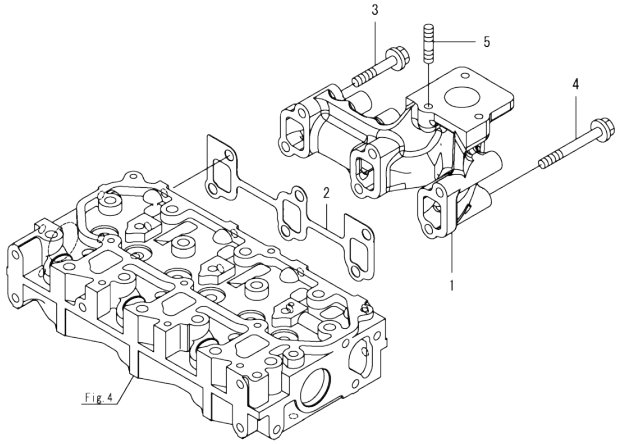

(A)=3TNV80FT-ZMYA
(B)=
(C)=
(D)=
(E)=
(F)=

No.	Lev.	Parts No.	Description	Q'ty (A)	(B)	(C)	(D)	(E)	(F)	I	R
1	1	119E11-13100	MANIFOLD, EXHAUST	1							
2	1	119717-13110	GASKET, MANIFOLD	1							
3	1	129E00-13610	BOLT, M8X50 10.9	3							
4	1	119802-13661	BOLT, M8X75 10.9T	3							
5	1	129418-18320	STUD, M8X20	3							

N:Old ◄Yes/No► New. Q:Old ◄No/Yes► New. R:Old ◄Yes/Yes► New. S:Old ◄No/No► New. W:Add. Z:Discontinued. F:Interchangeable by set. K:Q'ty Change

Copyright (C) 2020 YANMAR GLOBAL CS CO., LTD. All RightsReserved.

Fig.7. CAMSHAFT & DRIVING GEAR

(A)=3TNV80FT-ZMYA
(B)=
(C)=
(D)=
(E)=
(F)=

No.	Lev.	Parts No.	Description	Q'ty (A)	(B)	(C)	(D)	(E)	(F)	I	R
1	1	119620-14200	TAPPET	6							
2	1	119717-14400	ROD, PUSH	6							
3	1	119717-14581	CAMSHAFT ASSY	1							
8	1	26106-060122	BOLT, M6X 12 PLATED	2							
9	1	119717-25050	SHAFT, IDLE GEAR	1							
10	1	119717-25101	GEAR ASSY, IDLE	1							
13	1	26106-060352	BOLT, M6X 35 PLATED	3							
14	1	129150-25301	BOLT, INJECTION PUMP	4							
15	1	119717-25930	GEAR, PUMP	1							
16	1	119717-25911	BUSH, IDLE GEAR	1							1
17	1	119717-51150	FLANGE, CAMSHAFT	1							

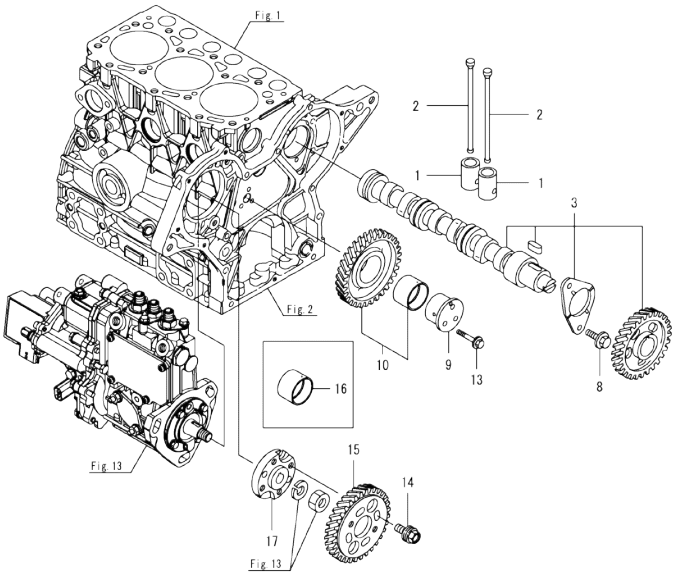

Remarks
(1)Spare parts.

N:Old ←Yes/No→ New. Q:Old ←No/Yes→ New. R:Old ←Yes/Yes→ New. S:Old ←No/No→ New. W:Add. Z:Discontinued. F:Interchangeable by set. K:Q'ty Change

Copyright (C) 2020 YANMAR GLOBAL CS CO., LTD. All RightsReserved.

Fig.8. TURBINE

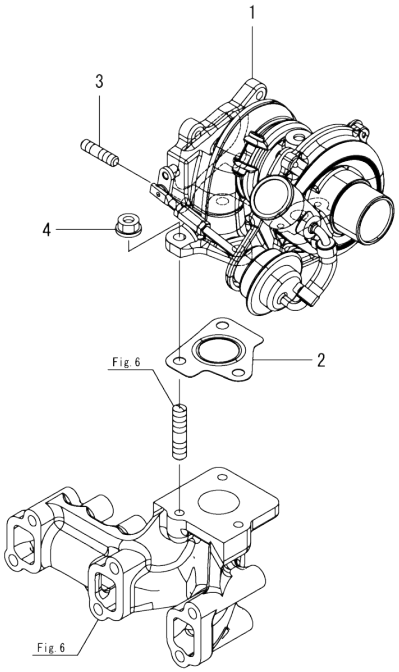

(A)=3TNV80FT-ZMYA
(B)=
(C)=
(D)=
(E)=
(F)=

No.	Lev.	Parts No.	Description	Q'ty (A)	(B)	(C)	(D)	(E)	(F)	I	R
1	1	129A01-18011	TURBOCHARGER, RHF3	1							
2	1	129A01-18080	GASKET, TURBINE IN	1							
3	1	119131-18320	STUD, M8X22	4							
4	1	26306-080002	NUT, M8	3							

N:Old ◄Yes/No► New. Q:Old ◄No/Yes► New. R:Old ◄Yes/Yes► New. S:Old ◄No/No► New. W:Add. Z:Discontinued. F:Interchangeable by set. K:Q'ty Change

Copyright (C) 2020 YANMAR GLOBAL CS CO., LTD. All RightsReserved.

Fig.9. CRANKSHAFT & PISTON

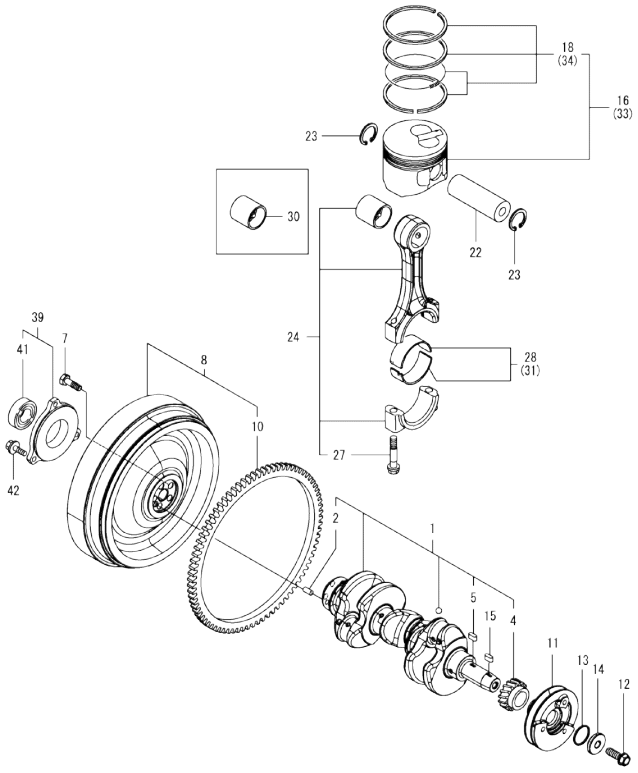

(A)=3TNV80FT-ZMYA
(B)=
(C)=
(D)=
(E)=
(F)=

No.	Lev.	Parts No.	Description	Q'ty (A)	(B)	(C)	(D)	(E)	(F)	I	R
1	1	119E10-21700	CRANKSHAFT ASSY	1							
2	2	129100-01580	PIN, PARALLEL 8X16	1							
4	2	119717-21200	GEAR, CRANKSHAFT	1							
5	2	22512-040120	KEY, 4X 12	1							
7	1	121111-21501	BOLT, FLYWHEEL	5							
8	1	119E17-21570	FLYWHEEL ASSY	1							
10	2	119865-21600	GEAR, RING Z=116	1							
11	1	119C10-21650	V-PULLEY, CRANKSHAFT	1							
12	1	119621-21681	BOLT, FLANGE 12X1.25	1							
13	1	119C10-21931	PACKING, WASHER	1							
14	1	119C10-21940	WASHER, V-PULLEY	1							
15	1	22512-040120	KEY, 4X 12	1							
16	1	119E11-22080	PISTON ASSY	3							
18	2	119E10-22500	RING SET, PISTON	3							
22	1	119E10-22300	PIN, PISTON	3							
23	1	22252-000220	RING, 22	6							
24	1	119E10-23001	ROD ASSY, CONNECTING	3							
27	2	119717-23200	BOLT, CONNECTING ROD	6							
28	1	119717-23601	METAL ASSY,CRANK PIN	3							
30	1	119717-23911	BUSH, PISTON PIN	3							1
31	1	119717-23611	METAL ASSY, PIN .25	3							2
33	1	119E11-22900	PISTON ASSY, 0.25 OS	3							3
34	2	119E10-22550	RING SET, PISTON .25	3							3
39	1	119888-21450	RETAINER, BEARING	1							
41	2	24104-062054	BEARING, BALL 6205UU	1							
42	1	26106-080222	BOLT, M8X 22 PLATED	3							

Remarks
(1)Spare parts.
(2)Under-sized(U.S.=0.25) parts.
(3)Over-sized(O.S.=0.25) parts.

N:Old ←Yes/No→ New. Q:Old ←No/Yes→ New. R:Old ←Yes/Yes→ New. S:Old ←No/No→ New. W:Add. Z:Discontinued. F:Interchangeable by set. K:Q'ty Change

Copyright (C) 2020 YANMAR GLOBAL CS CO., LTD. All RightsReserved.

Fig.10. LUB. OIL SYSTEM

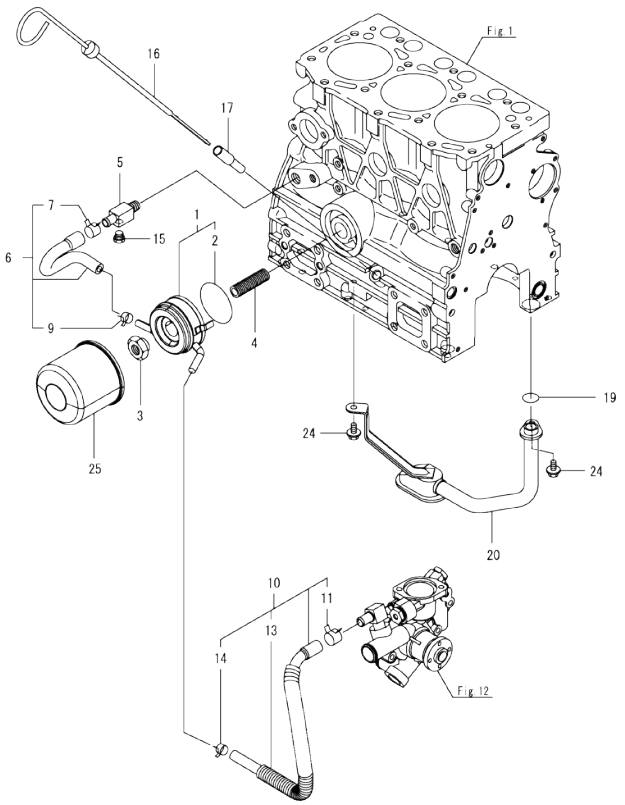

Remarks
(1)Spare parts.

(A)=3TNV80FT-ZMYA
(B)=
(C)=
(D)=
(E)=
(F)=

No.	Lev.	Parts No.	Description	Q'ty (A)	(B)	(C)	(D)	(E)	(F)	I	R
1	1	119717-33010	COOLER, OIL	1							
2	2	129508-33050	O-RING	1							
3	1	129417-33111	NUT, OIL COOLER	1							
4	1	119E11-35140	STUD, LO FILTER	1							
5	1	129006-44480	JOINT, R02	1							
6	1	119E11-49010	PIPE ASSY, COOLER IN	1							
7	2	171008-03990	CLAMP, HOSE 18.5	1							
9	2	23080-015000	CLAMP, 15	1							
10	1	129508-49040	HOSE ASSY,COOLER OUT	1							
11	2	171008-03990	CLAMP, HOSE 18.5	1							
13	2	119940-59130	TUBE, CORRUGATED 19	1							
14	2	23080-015000	CLAMP, 15	1							
15	1	171056-49120	PLUG, DRAIN R1/4	1							
16	1	119717-34801	DIPSTICK, OIL	1							
17	1	121520-34810	GUIDE, DIPSTICK	1							
19	1	119717-32060	O-RING, P15.0	1							
20	1	119717-35080	PIPE ASSY, OIL INLET	1							
24	1	26106-060102	BOLT, M6X 10 PLATED	2							
25	1	119305-35170	FILTER ASSY, D68XL65	1							1

N:Old ←Yes/No→ New. Q:Old ←No/Yes→ New, R:Old ←Yes/Yes→ New, S:Old ←No/No→ New. W:Add. Z:Discontinued. F:Interchangeable by set. K:Q'ty Change

Copyright (C) 2020 YANMAR GLOBAL CS CO., LTD. All RightsReserved.

Fig.11. LUB. OIL PIPE

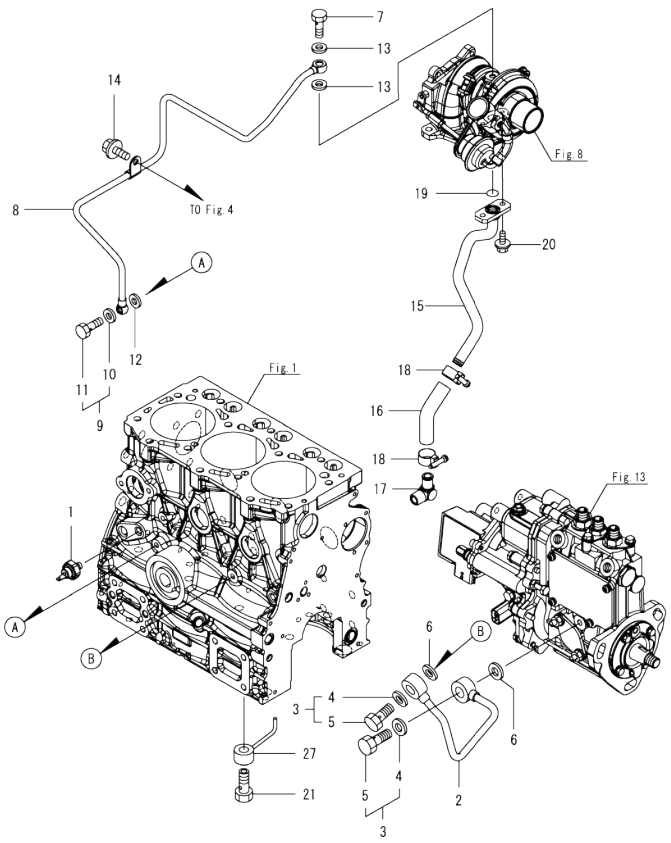

0CD50-M06370 Fig.11

(A)=3TNV80FT-ZMYA (D)=
(B)= (E)=
(C)= (F)=

No.	Lev.	Parts No.	Description	Q'ty (A)	(B)	(C)	(D)	(E)	(F)	I	R
1	1	119761-39450	SWITCH, HYDRAULIC	1							
2	1	119717-39210	PIPE, PUMP	1							
3	1	129005-59830	BOLT ASSY, JOINT M8	2							
4	2	22190-080002	WASHER, SEAL 8	2							
5	2	23857-030000	BOLT, JOINT 3	2							
6	1	22190-080002	WASHER, SEAL 8	2							
7	1	121252-39150	BOLT, JOINT M10X1.5	1							
8	1	119E11-39450	PIPE ASSY, LO	1							
9	1	129005-59830	BOLT ASSY, JOINT M8	1							
10	2	22190-080002	WASHER, SEAL 8	1							
11	2	23857-030000	BOLT, JOINT 3	1							
12	1	22190-080002	WASHER, SEAL 8	1							
13	1	23414-100000	GASKET, 10X1.0	2							
14	1	26106-080122	BOLT, M8X 12 PLATED	1							
15	1	119E11-39600	PIPE, LO RETURN T/C	1							
16	1	129044-39610	JOINT, RUBBER	1							
17	1	129466-49300	ELBOW, PT3/8	1							
18	1	23000-022000	CLAMP, 22	2							
19	1	24316-000160	O-RING, 4DP16.0	1							
20	1	26106-060162	BOLT, M6X 16 PLATED	2							
21	1	119E11-39410	VALVE ASSY, CHECK	3							
27	1	119E11-39660	NOZZLE ASSY, PISTON	3							

N:Old ←Yes/No→ New. Q:Old ←No/Yes→ New. R:Old ←Yes/Yes→ New. S:Old ←No/No→ New. W:Add. Z:Discontinued. F:Interchangeable by set. K:Q'ty Change

Copyright (C) 2020 YANMAR GLOBAL CS CO., LTD. All RightsReserved.

Fig.12. COOLING WATER SYSTEM

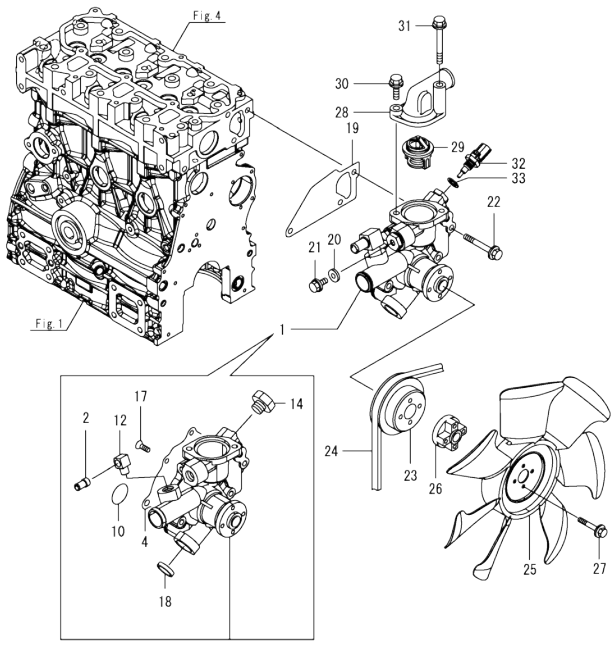

(A)=3TNV80FT-ZMYA (D)=
(B)= (E)=
(C)= (F)=

No.	Lev.	Parts No.	Description	Q'ty (A)	(B)	(C)	(D)	(E)	(F)	I	R
1	1	119E11-42001	PUMP ASSY, CW	1							
2	2	121851-11970	JOINT, PIPE 3/8	1							
4	2	119717-42031	GASKET, WATER PUMP	1							
10	2	119C10-42320	O-RING, 2028	1							
12	2	119751-49310	JOINT, WATER RETURN	1							
14	2	129974-49350	JOINT, SENSOR	1							
17	2	26577-060122	SCREW, M6X12	4							
18	2	119717-42050	PLUG, 25	1							
19	1	119717-42020	GASKET, WATER PUMP	1							
20	1	23414-080000	GASKET, 8X1.0	1							
21	1	26106-080122	BOLT, M8X 12 PLATED	1							
22	1	26106-080502	BOLT, M8X 50 PLATED	3							
23	1	119717-42350	V-PULLEY, PUMP D=100	1							
24	1	25152-003600	V-BELT, A36	1							
25	1	129120-44741	FAN, COOLING D=360	1							
26	1	171353-44760	SPACER, FAN 25MM	1							
27	1	26106-060352	BOLT, M6X 35 PLATED	4							
28	1	124101-49531	COVER, THERMOSTAT	1							
29	1	119717-49800	THERMOSTAT, 71C	1							
30	1	26106-080282	BOLT, M8X 28 PLATED	1							
31	1	26106-080652	BOLT, M8X 65 PLATED	1							
32	1	129927-44900	SENSOR, TEMPERATURE	1							
33	1	22190-120002	WASHER, SEAL 12	1							

N:Old ←Yes/No→ New. Q:Old ←No/Yes→ New. R:Old ←Yes/Yes→ New. S:Old ←No/No→ New. W:Add. Z:Discontinued. F:Interchangeable by set. K:Q'ty Change

Copyright (C) 2020 YANMAR GLOBAL CS CO., LTD. All RightsReserved.

Fig.13. FUEL INJECTION PUMP

(A)=3TNV80FT-ZMYA
(B)=
(C)=
(D)=
(E)=
(F)=

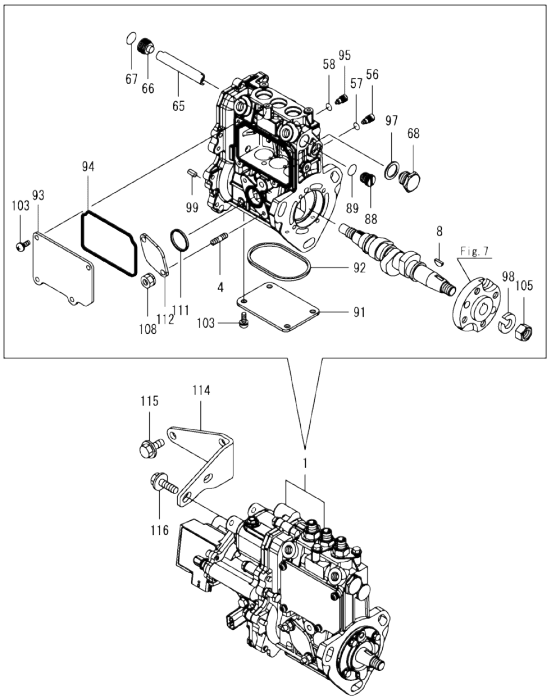

No.	Lev.	Parts No.	Description	Q'ty (A)	(B)	(C)	(D)	(E)	(F)	I	R
1	1	719E33-51310	FIE ASSY	1							1
4	2	129155-51020	STUD	2							
8	2	122710-51090	KEY, FEATHER	1							
56	2	158600-51270	STOPPER, TAPPET	3							
57	2	129155-51280	O-RING, S6	3							
58	2	129155-51280	O-RING, S6	1							
65	2	129155-51400	PROTECTOR	1							
66	2	158600-51410	PLUG, DEFLIFTER M12	1							
67	2	119717-51420	O-RING	1							
68	2	158600-51420	PLUG, DEFLIFTER M16	1							
88	2	158600-51570	PLUG, RACK	1							
89	2	129155-51580	O-RING	1							
91	2	129155-51701	COVER, PUMP BOTTOM	1							
92	2	119717-51711	GASKET, PUMP	1							
93	2	119717-51750	COVER, BODY SIDE	1							
94	2	119717-51761	GASKET, PUMP COVER	1							
95	2	158600-51790	STOPPER, RACK	1							
97	2	22190-160002	WASHER, SEAL 16	1							
98	2	22217-120000	WASHER, SPRING 12	1							
99	2	22351-050010	PIN, SPRING 5.0X10	2							
103	2	26022-050122	SCREW, M5X12	8							
105	2	26716-120002	NUT, M12	1							
108	2	119717-51860	NUT, M6	2							
111	2	129155-52051	GASKET, PUMP COVER	1							
112	2	129100-52200	COVER, FEED PUMP	1							
114	1	119E11-51200	SUPPORT, FOP	1							
115	1	26106-080142	BOLT, M8X 14 PLATED	2							
116	1	26106-080202	BOLT, M8X 20 PLATED	2							

Remarks
(1)Governor(Fig.14) is incorporated in this Fuel Injection Pump(No.1).

N:Old $\frac{\text{Yes}}{\text{No}}$ New. Q:Old $\frac{\text{No}}{\text{Yes}}$ New. R:Old $\frac{\text{Yes}}{\text{Yes}}$ New. S:Old $\frac{\text{No}}{\text{No}}$ New. W:Add. Z:Discontinued. F:Interchangeable by set. K:Q'ty Change

Copyright (C) 2020 YANMAR GLOBAL CS CO., LTD. All RightsReserved.

Fig.14. GOVERNOR

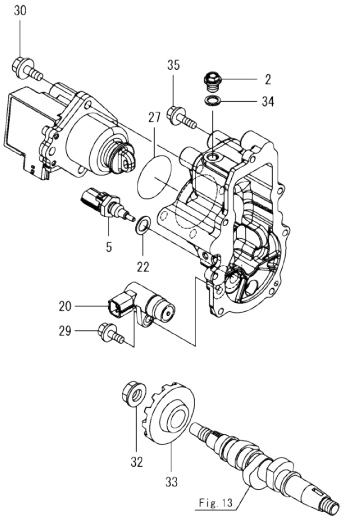

Remarks
* This figure(Governor) is incorporated in the Fuel Injection Pump(Fig.13).

(A)=3TNV80FT-ZMYA
(B)=
(C)=
(D)=
(E)=
(F)=

No.	Lev.	Parts No.	Description	Q'ty (A)	(B)	(C)	(D)	(E)	(F)	I	R
2	2	119717-51930	PLUG, M10	1							
5	2	119E11-39440	SENSOR, OIL TEMP	1							
20	2	158557-61720	SENSOR, ROTATION	1							
22	2	22190-120002	WASHER, SEAL 12	1							
27	2	24341-000480	O-RING, 1AS48.0	1							
29	2	26106-060162	BOLT, M6X 16 PLATED	1							
30	2	26106-080252	BOLT, M8X 25 PLATED	3							
32	2	129008-61301	NUT, SUPPORT	1							
33	2	119E11-61780	GEAR	1							
34	2	22190-100002	WASHER, SEAL 10	1							
35	2	26106-060202	BOLT, M6X 20 PLATED	7							

N:Old ◄Yes/No► New. Q:Old ◄No/Yes► New. R:Old ◄Yes/Yes► New. S:Old ◄No/No► New. W:Add. Z:Discontinued. F:Interchangeable by set. K:Q'ty Change

Copyright (C) 2020 YANMAR GLOBAL CS CO., LTD. All RightsReserved.

Fig.15. FUEL INJECTION VALVE

(A)=3TNV80FT-ZMYA
(B)=
(C)=
(D)=
(E)=
(F)=

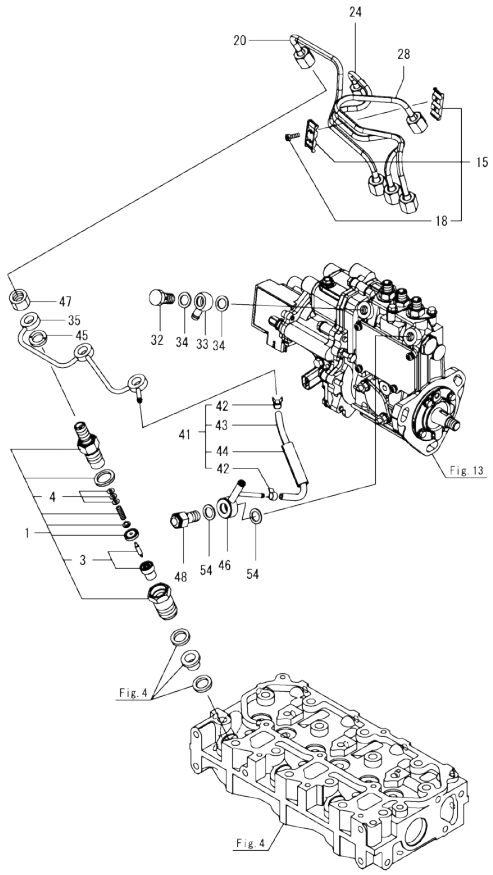

No.	Lev.	Parts No.	Description	Q'ty (A)	(B)	(C)	(D)	(E)	(F)	I	R
1	1	119C10-53000	VALVE ASSY,INJECTION	3							
3	2	119C10-53010	VALVE ASSY,INJECTION	3							
4	2	129901-53800	SHIM SET, ADJUSTING	3							1
15	1	129150-59120	RETAINER, PIPE	1							
18	2	129150-59131	BOLT, M4X14	2							
20	1	119E10-59810	PIPE ASSY, INJECTION	1							
24	1	119E10-59820	PIPE, INJECTION NO.2	1							
28	1	119E10-59830	PIPE, INJECTION NO.3	1							
32	1	103854-39140	BOLT, PIPE JOINT	1							
33	1	101304-59020	JOINT, PIPE 12	1							
34	1	22190-120002	WASHER, SEAL 12	2							
35	1	119E11-59510	PIPE ASSY, FO RETURN	1							
41	1	119546-59301	PIPE ASSY, FO RETURN	1							
42	2	124066-59100	CLAMP, HOSE 8	2							
43	2	119416-59511	PIPE, FO RETURN	1							
44	2	129263-49750	TUBE, CORRUGATED	1							
45	1	129901-59560	GASKET, FUEL RETURN	3							
46	1	119740-59590	JOINT, OVERFLOW	1							
47	1	119620-59700	NUT, NOZZLE RETURN	3							
48	1	119813-59950	VALVE ASSY, CHECK	1							
54	1	22190-120002	WASHER, SEAL 12	2							

Remarks
(1)Spare parts.

N:Old ◄Yes/No► New. Q:Old ◄No/Yes► New. R:Old ◄Yes/Yes► New. S:Old ◄No/No► New. W:Add. Z:Discontinued. F:Interchangeable by set. K:Q'ty Change

Copyright (C) 2020 YANMAR GLOBAL CS CO., LTD. All RightsReserved.

Fig.16. STARTER MOTOR

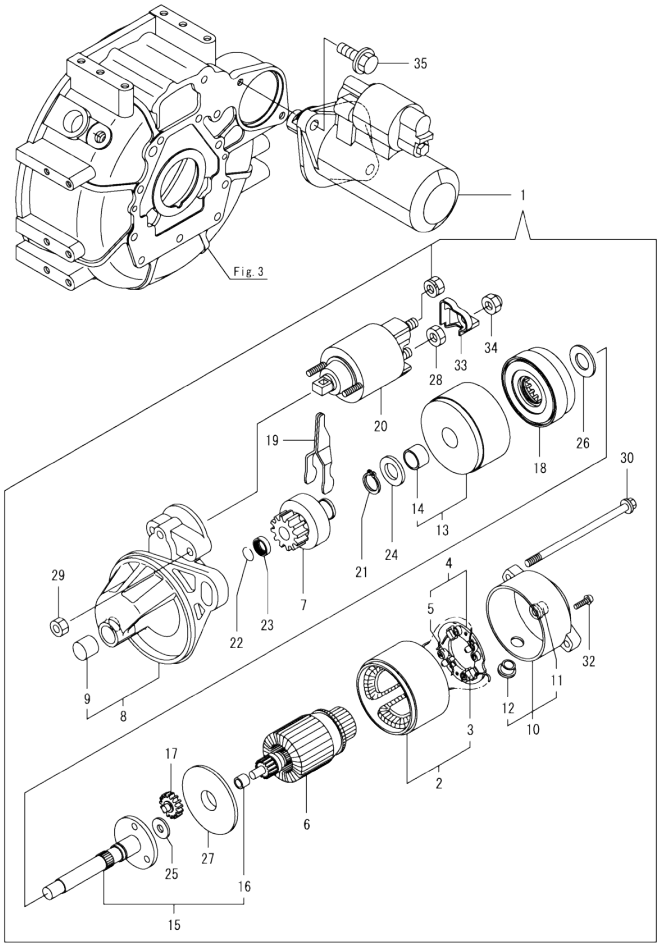

0CD50-M06370 Fig.16

(A)=3TNV80FT-ZMYA (D)=
(B)= (E)=
(C)= (F)=

No.	Lev.	Parts No.	Description	Q'ty (A)	(B)	(C)	(D)	(E)	(F)	I	R
1	1	119717-77010	STARTER, P1.1	1							
2	2	X0281007750	YOKE ASSY	1							
3	3	X0280996180	STARTER KIT	2							
4	2	X0285105190	HOLDER ASSY	1							
5	3	X0285205030	SPRING	4							
6	2	X0282005991	ARMATURE ASSY	1							
7	2	X0283006960	CLUTCH	1							
8	2	X4284001590	HOUSING ASSY	1							
9	3	X9491050100	BEARING, NEEDLE	1							
10	2	X0285007030	FRAME ASSY	1							
11	3	X9491040990	BEARING	1							
12	3	X0280626010	COVER	1							
13	2	X0284105040	BEARING ASSY, SUB	1							
14	3	X9491034330	BEARING	1							
15	2	X0286105010	SHAFT ASSY, SUB	1							
16	3	X9491034320	BEARING	1							
17	2	X0286305010	GEAR	3							
18	2	X0286355010	GEAR	1							
19	2	X0287405140	LEVER	1							
20	2	X2534000090	SWITCH ASSY	1							
21	2	X9055715000	RING	1							
22	2	X9490721360	RING	1							
23	2	X0280210331	NUT	1							
24	2	X9490138110	WASHER	1							
25	2	X9490138090	WASHER	1							
26	2	X9490138100	WASHER	1							
27	2	X0284525010	PLATE	1							
28	2	X9490562360	NUT	1							
29	2	X9490560750	NUT	2							
30	2	X9490423420	BOLT, THROUGH	2							
32	2	X9490065670	SCREW, M4X6	2							
33	2	X1280330020	COVER, TERMINAL	1							
34	2	X1289510130	NUT	1							
35	1	26106-100252	BOLT, M10X 25 PLATED	2							

N:Old ◄Yes/No► New. Q:Old ◄No/Yes► New. R:Old ◄Yes/Yes► New. S:Old ◄No/No► New. W:Add. Z:Discontinued. F:Interchangeable by set. K:Q'ty Change

Copyright (C) 2020 YANMAR GLOBAL CS CO., LTD. All RightsReserved.

Fig.17. GENERATOR

(A)=3TNV80FT-ZMYA
(B)=
(C)=
(D)=
(E)=
(F)=

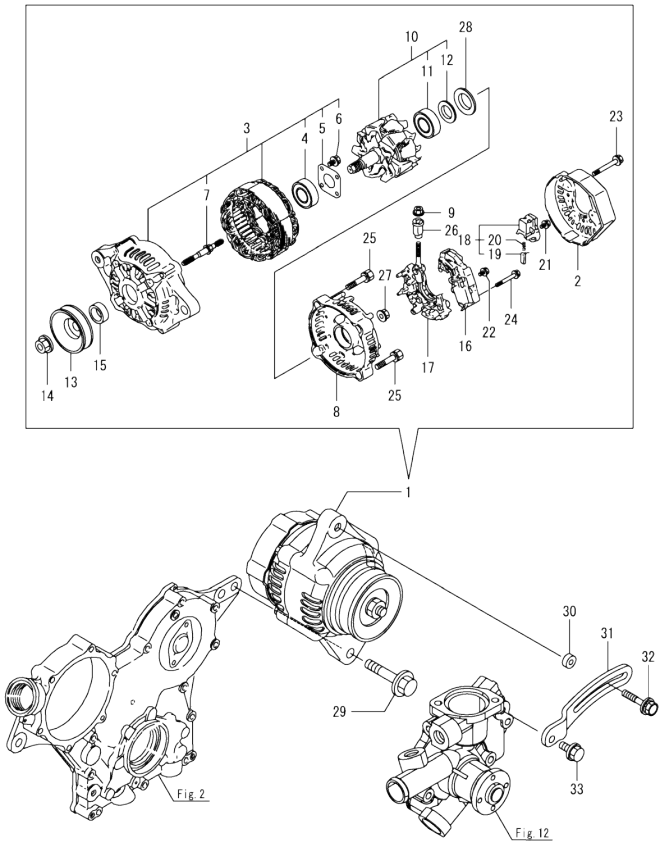

No.	Lev.	Parts No.	Description	Q'ty (A)	(B)	(C)	(D)	(E)	(F)	I	R
1	1	119751-77210	ALTERNATOR, 12V-40A	1							
2	2	129240-79300	COVER	1							
3	2	129052-77422	FRAME ASSY	1							
4	3	119620-79200	BEARING, BALL	1							
5	3	119620-79210	PLATE, RETAINER	1							
6	3	119620-79220	SCREW	4							
7	3	119620-79230	STUD	2							
8	2	119751-77440	FRAME ASSY, REAR	1							
9	2	X9490561001	NUT	1							
10	2	119620-77380	ROTOR ASSY	1							
11	3	123501-79240	BEARING, BALL	1							
12	3	119620-79250	COVER, BEARING	1							
13	2	119620-77461	PULLEY, GENERATOR	1							
14	2	119620-77471	NUT	1							
15	2	119620-77490	COLLAR	1							
16	2	129423-77730	REGULATOR ASSY	1							
17	2	119620-79260	HOLDER ASSY	1							
18	2	129052-79270	HOLDER ASSY, BRUSH	1							
19	3	119620-77480	BRUSH ASSY, SUB	2							
20	3	119620-79280	SPRING	2							
21	2	119620-79290	SCREW	6							
22	2	119620-79300	SCREW	1							
23	2	119620-79310	BOLT	3							
24	2	119620-79320	SCREW, W/WASHER	2							
25	2	119620-79330	BOLT	2							
26	2	119620-79340	BUSH, INSULATION	1							
27	2	119620-79350	NUT	2							
28	2	119620-79360	WASHER, THRUST	1							
29	1	26106-100452	BOLT, M10X 45 PLATED	1							
30	1	119940-77270	SPACER, GENERATOR	1							
31	1	119717-77340	ADJUSTER, BELT	1							
32	1	129972-77341	BOLT, ADJUSTER L=50	1							
33	1	26106-080202	BOLT, M8X 20 PLATED	1							

N:Old ←Yes/No→ New. Q:Old ←No/Yes→ New. R:Old ←Yes/Yes→ New. S:Old ←No/No→ New. W:Add. Z:Discontinued. F:Interchangeable by set. K:Q'ty Change

Copyright (C) 2020 YANMAR GLOBAL CS CO., LTD. All RightsReserved.

Fig.18. ELECTRONIC CONTROL UNIT(ECU)

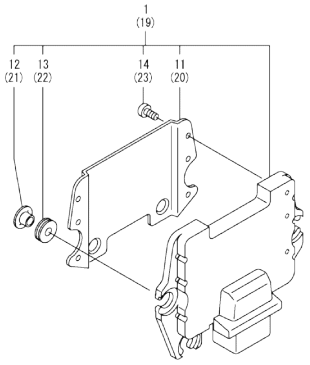

Remarks
(1)Eco ECU
This part cannot be ordered.
Replace the part using a Service ECU with the proper engine information installed.
(2)Service ECU
When replacing this part, it is necessary to update the software of the ECU using the designated service tool.
Please refer to the Service Manual for details.

(A)=3TNV80FT-ZMYA (D)=
(B)= (E)=
(C)= (F)=

No.	Lev.	Parts No.	Description	Q'ty (A)	(B)	(C)	(D)	(E)	(F)	I	R
1	1	119E33-75170	ECU ASSY	1							1
11	2	129927-77600	SHIELD, ECU	1							
12	2	129927-77680	COLLAR, CONTROLLER	3							
13	2	119578-91351	RUBBER, CONTROLLER	3							
14	2	22877-500080	SCREW, 5X 8	6							
19	1	129927-75901	ECU ASSY, SERVICE	1							2
20	2	129927-77600	SHIELD, ECU	1							
21	2	129927-77680	COLLAR, CONTROLLER	3							
22	2	119578-91351	RUBBER, CONTROLLER	3							
23	2	22877-500080	SCREW, 5X 8	6							

N:Old ◄Yes/No► New. Q:Old ◄No/Yes► New. R:Old ◄Yes/Yes► New. S:Old ◄No/No► New. W:Add. Z:Discontinued. F:Interchangeable by set. K:Q'ty Change

Copyright (C) 2020 YANMAR GLOBAL CS CO., LTD. All RightsReserved.

Fig.19. ACCESSORY

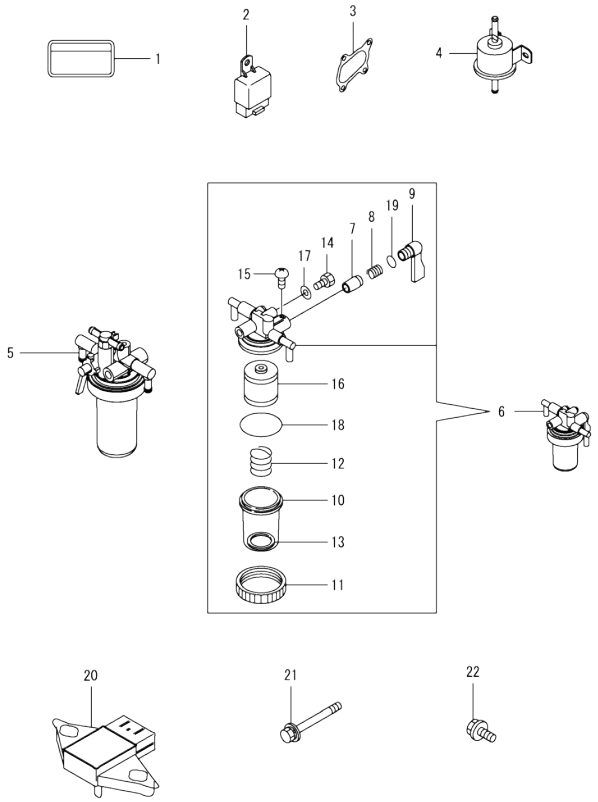

(A)=3TNV80FT-ZMYA
(B)=
(C)=
(D)=
(E)=
(F)=

No.	Lev.	Parts No.	Description	Q'ty (A)	(B)	(C)	(D)	(E)	(F)	I	R
1	1	114110-07761	LABEL, FUEL CAUTION	1							
2	1	172B02-17150	RELAY, CA TYPE C	2							
3	1	129A01-18090	GASKET, TURBINE OUT	1							
4	1	129612-52100	PUMP, FUEL FEED	1							
5	1	119E20-55600	FILTER ASSY, FUEL	1							
6	1	119741-55700	SEPARATOR ASSY,WATER	1							
7	2	104200-55321	VALVE, TAPER	1							
8	2	104200-55330	SPRING, FUEL VALVE	1							
9	2	104200-55341	HANDLE, COCK	1							
10	2	124064-55510	CUP, FUEL STARINER	1							
11	2	110250-55610	RING, CUP RETAINING	1							
12	2	121257-55720	SPRING, ELEMENT	1							
13	2	121257-55731	FLOAT	1							
14	2	101720-55750	PLUG, HEXAGON M6	2							
15	2	104200-55750	SCREW, M4	1							
16	2	119741-55790	ELEMENT ASSY	1							
17	2	23418-060000	GASKET, 6X1.0	2							
18	2	24316-000440	O-RING, 4DP44.0	1							
19	2	24316-240100	O-RING, 4DP10A	1							
20	1	129927-91200	SENSOR, PRESSURE	1							
21	1	26014-080702	BOLT, M8X 70	1							
22	1	26106-080162	BOLT, M8X 16 PLATED	2							

N:Old ←Yes/No→ New. Q:Old ←No/Yes→ New. R:Old ←Yes/Yes→ New. S:Old ←No/No→ New. W:Add. Z:Discontinued. F:Interchangeable by set. K:Q'ty Change

Copyright (C) 2020 YANMAR GLOBAL CS CO., LTD. All RightsReserved.

Parts No. Index

Parts No.	Fig. No.	Ref. No.
101304-59020	15	33
101720-55750	19	14
103854-39140	15	32
104200-55321	19	7
104200-55330	19	8
104200-55341	19	9
104200-55750	19	15
105010-11490	4	3
105311-01090	1	4
105425-01690	3	12
110250-55610	19	11
114110-07761	19	1
119100-11330	4	47
119131-18320	8	3
119260-11270	4	32
119285-01990	1	6
119285-11990	4	11
119305-35170	10	25
119416-59511	15	43
119546-59301	15	41
119578-91351	18	13
		22
119600-11460	4	2
119620-01750	3	5
119620-02020	1	7
119620-11280	4	26
119620-14200	7	1
119620-59700	15	47
119620-77380	17	10
119620-77461	17	13
119620-77471	17	14
119620-77480	17	19
119620-77490	17	15
119620-79200	17	4
119620-79210	17	5
119620-79220	17	6
119620-79230	17	7
119620-79250	17	12
119620-79260	17	17
119620-79280	17	20
119620-79290	17	21
119620-79300	17	22
119620-79310	17	23
119620-79320	17	24
119620-79330	17	25
119620-79340	17	26
119620-79350	17	27
119620-79360	17	28
119621-21681	9	12
119623-01250	1	5

Parts No.	Fig. No.	Ref. No.
119624-32040	2	18
119660-01911	2	17
119717-01501	2	1
119717-01521	2	5
119717-01570	2	2
119717-01611	3	2
119717-01720	3	9
119717-01750	2	16
119717-01770	3	11
119717-01800	2	7
119717-02411	1	10
119717-02930	1	23
119717-03031	4	36
119717-03070	4	37
		38
119717-11131	4	15
119717-11190	4	17
119717-11200	4	21
119717-11240	4	22
119717-11260	4	25
119717-11331	4	48
119717-11340	4	18
119717-11350	4	19
119717-11650	4	27
119717-11800	4	63
119717-13110	6	2
119717-14400	7	2
119717-14581	7	3
119717-21200	9	4
119717-23200	9	27
119717-23601	9	28
119717-23611	9	31
119717-23911	9	30
119717-25050	7	9
119717-25101	7	10
119717-25911	7	16
119717-25930	7	15
119717-32050	2	19
119717-32060	10	19
119717-32080	2	9
119717-32100	2	8
119717-32110	2	13
119717-32120	2	14
119717-33010	10	1
119717-34801	10	16
119717-35080	10	20
119717-39210	11	2
119717-42020	12	19
119717-42031	12	4
119717-42050	12	18

Parts No.	Fig. No.	Ref. No.
119717-42350	12	23
119717-49800	12	29
119717-51150	7	17
119717-51420	13	67
119717-51711	13	92
119717-51750	13	93
119717-51761	13	94
119717-51860	13	108
119717-51930	14	2
119717-77010	16	1
119717-77340	17	31
119717-77801	4	56
119717-77820	4	57
119718-11310	4	45
119734-01590	2	3
119734-02220	3	6
119740-59590	15	46
119741-55700	19	6
119741-55790	19	16
119751-49310	12	12
119751-77210	17	1
119751-77440	17	8
119761-39450	11	1
119802-03100	4	39
119802-03110	4	40
119802-03121	4	41
119802-03131	4	42
119802-03141	4	43
119802-13661	6	4
119802-32130	2	15
119810-01200	1	26
119810-02941	1	34
119813-59950	15	48
119865-21600	9	10
119888-01850	3	4
119888-21450	9	39
119940-59130	10	13
119940-77270	17	30
119C10-21650	9	11
119C10-21931	9	13
119C10-21940	9	14
119C10-42320	12	10
119C10-53000	15	1
119C10-53010	15	3
119E00-01560	1	1
119E10-01330	1	27
119E10-11100	4	13
119E10-11110	4	14
119E10-21700	9	1
119E10-22300	9	22

Parts No.	Fig. No.	Ref. No.
119E10-22500	9	18
119E10-22550	9	34
119E10-23001	9	24
119E10-59810	15	20
119E10-59820	15	24
119E10-59830	15	28
119E11-03050	5	7
119E11-11320	4	46
119E11-11390	4	35
119E11-11740	4	4
119E11-12010	5	1
119E11-13100	6	1
119E11-22080	9	16
119E11-22900	9	33
119E11-35140	10	4
119E11-39410	11	21
119E11-39440	14	5
119E11-39450	11	8
119E11-39600	11	15
119E11-39660	11	27
119E11-42001	12	1
119E11-49010	10	6
119E11-51200	13	114
119E11-59510	15	35
119E11-61780	14	33
119E17-21570	9	8
119E20-55600	19	5
119E33-03000	5	4
119E33-03010	5	5
119E33-07900	4	64
119E33-07920	4	58
119E33-12070	5	8
119E33-75170	18	1
121111-21501	9	7
121252-39150	11	7
121257-55720	19	12
121257-55731	19	13
121520-34810	10	17
121850-51960	2	20
121851-11970	12	2
122710-51090	13	8
123501-79240	17	11
124060-01050	1	11
124064-55510	19	10
124066-59100	15	42
124101-49531	12	28
124160-01751	2	28
	4	34
124160-01910	1	12
129001-32320	2	11

Parts No. Index

Parts No.	Fig. No.	Ref. No.
129001-32330	2	12
129005-59830	11	3
		9
129006-44480	10	5
129008-61301	14	32
129044-39610	11	16
129052-77422	17	3
129052-79270	17	18
129100-01580	3	1
	9	2
129100-52200	13	112
129120-44741	12	25
129150-11230	4	28
129150-11750	4	30
129150-25301	7	14
129150-59120	15	15
129150-59131	15	18
129155-51020	13	4
129155-51280	13	57
		58
129155-51400	13	65
129155-51580	13	89
129155-51701	13	91
129155-52051	13	111
129240-79300	17	2
129263-49750	15	44
129410-03990	5	6
129417-33111	10	3
129418-18320	6	5
129423-77730	17	16
129466-49300	11	17
129508-11180	4	16
129508-33050	10	2
129508-49040	10	10
129612-52100	19	4
129900-32130	2	10
129901-11450	4	1
129901-53800	15	4
129901-59560	15	45
129927-44900	12	32
129927-75901	18	19
129927-77600	18	11
		20
129927-77680	18	12
		21
129927-91200	19	20
129972-77341	17	32
129974-49350	12	14
129A01-18011	8	1
129A01-18080	8	2

Parts No.	Fig. No.	Ref. No.
129A01-18090	19	3
129E00-13610	6	3
158557-61720	14	20
158600-51270	13	56
158600-51410	13	66
158600-51420	13	68
158600-51570	13	88
158600-51790	13	95
171008-03990	10	7
		11
171056-49120	10	15
171353-44760	12	26
172B02-17150	19	2
22190-080002	11	4
		6
		10
		12
22190-100002	14	34
22190-120002	12	33
	14	22
	15	34
		54
22190-160002	3	15
	13	97
22217-120000	13	98
22242-000120	4	31
22252-000220	9	23
22351-050010	13	99
22351-060012	4	20
22512-040120	9	5
		15
22857-500100	4	49
		50
22857-500160	4	51
22877-500080	18	14
		23
23000-022000	11	18
23000-048000	5	2
23000-054000	5	3
		9
23080-015000	10	9
		14
23414-080000	12	20
23414-100000	11	13
23418-060000	19	17
23857-030000	11	5
		11
23876-005000	4	12
23876-030000	2	6
24104-062054	9	41

Parts No.	Fig. No.	Ref. No.
24311-000320	2	29
	4	52
24316-000160	11	19
24316-000440	19	18
24316-240100	19	19
24341-000480	14	27
25152-003600	12	24
26014-080702	19	21
26022-050122	13	103
26106-060102	10	24
26106-060122	2	21
	7	8
26106-060162	2	22
	11	20
	14	29
26106-060202	4	53
	14	35
26106-060352	7	13
	12	27
26106-060402	2	23
		24
26106-060602	2	25
26106-060652	2	26
26106-060752	4	54
26106-060852	4	55
26106-080122	3	16
	11	14
	12	21
26106-080142	13	115
26106-080162	4	65
	19	22
26106-080202	13	116
	17	33
26106-080222	9	42
26106-080252	14	30
26106-080282	12	30
26106-080302	3	17
26106-080402	4	33
26106-080452	3	18
26106-080502	3	19
	12	22
26106-080652	12	31
26106-080752	4	62
26106-100252	16	35
26106-100452	17	29
26206-100252	3	7
26206-100302	3	8
26306-080002	2	27
	8	4
26577-060122	12	17

Parts No.	Fig. No.	Ref. No.
26716-120002	13	105
27241-120000	1	13
719717-02901	1	28
719717-02911	1	31
719734-01500	2	4
719E33-51310	13	1
X0280210331	16	23
X0280626010	16	12
X0280996180	16	3
X0281007750	16	2
X0282005991	16	6
X0283006960	16	7
X0284105040	16	13
X0284525010	16	27
X0285007030	16	10
X0285105190	16	4
X0285205030	16	5
X0286105010	16	15
X0286305010	16	17
X0286355010	16	18
X0287405140	16	19
X1280330020	16	33
X1289510130	16	34
X2534000090	16	20
X4284001590	16	8
X9055715000	16	21
X9490065670	16	32
X9490138090	16	25
X9490138100	16	26
X9490138110	16	24
X9490423420	16	30
X9490560750	16	29
X9490561001	17	9
X9490562360	16	28
X9490721360	16	22
X9491034320	16	16
X9491034330	16	14
X9491040990	16	11
X9491050100	16	9