YANMAR

PARTS CATALOG

0CW10-M61500EN

Last update Aug., 2014

PREFACE

1. This parts catalog is the 1st edition of 3TNV82A-BDFS, 3TNV82A-BDFST for FERRIS.

Pub. No. : 0CW10-G61500
Published : March, 2010

2. Model name

Engine model	Vehicle	Vehicle made by
3TNV82A-BDFS 3TNV82A-BDFST	MOWER ZTR	FERRIS

Directions for the Parts Catalog.

1.The parts stipulated in this Parts Catalog are not necessarily standard equipped parts.
2.Parts may change without prior notice.
3.The following is an example of the Parts Catalog format.

0CF10-G21601 29. FUEL INJECTION PUMP(W/BOOST)

(A)=4JH-DT
(B)=4JH-DTZ
(C)=4JH-DTZP
(D)=4JH-DTZA
(E)=4JH-DTZY
(F)=

① REF.	② LEV.	PARTS NO.	DESCRIPTION	Q'TY (A)	(B)	(C)	(D)	(E)	(F)	③ I	⑤ R
1	1	729595-51390	FUEL INJECTION PUMP	1	1	1	1	1			1
1-1	1	729595-51391	FUEL INJECTION PUMP	1	1	1	1	1		N	1
	(A=E00185)	(B=E00200)									
3	2	26022-060162	SCREW M 6X 16	9	9	9	9	9			
3-1 ④	2	26022-060162	SCREW M 6X 16	4	4	4	4	4		K	
	(A=E00156)	(B=E00156)	(C=E00156) (D=E00156)	(E=E00156)							
4	2	129470-51040	CAMSHAFT	1	1	1	1	1			
5	2	122710-51050	BEARING, ROLLER	2	2	2	2	2			
6	2	129470-51060	RETAINER	1	1	1	1	1			

Remarks
(1) BOOST COMPEMSATOR TYPE. OPTIONAL
PART, TO E00155,(4JH-DT, 4JH-DTZ

① Ref. No.

The Ref. No. listed may not be in accordance with the illustration Ref. No.

(Ex.) Illustration No. 1 List Ref No. 1 (Before change) → 1- 1 (After change)

For interchangeable symbols N, R and K, illustrations for new parts may be abbreviated.

② Lev. (Level)

Level indication
The numbers below indicate the level of relativity towards the main part.
1 ----- Main parts (Assembly parts)
2 ----- Sub component included in " 1 ".
3 ----- Sub component included in " 2 ".
Note) Parts that are not for sale are partially illustrated but not listed.

③ Interchangeability Mark

When a part change takes place, one of the following interchangeability symbols is indicated beside the part.

Symbol	Interchangeability	Contents note
N	Old ← Yes / No → New	New Part is interchangeable for Old Part but Old Part is not interchangeable for New Part.
Q	Old ← No / Yes → New	New Part is not interchangeable for Old Part but Old Part is interchangeable for New Part.
R	Old ← Yes / Yes → New	New/ Old Parts are both interchangeable.
S	Old ← No / No → New	New/ Old Parts are both not interchangeable.
W		Part newly added.
Z		Part discontinued.
F		Not interchangeable by a single part but interchangeable together with related parts.
K		Changes only for used parts quantities.

④ Effective Machine No.

When a part changes, the effective Machine No. will be indicated in the (A)-(F) column.

Product Symbol	Product No.	Product Symbol	Product No.
C	Clutch No. Compressor No.	F	Machine No. (Agricultural Equip.)
D	Drive No.	M	Machine No.
E	Engine No.		

Note 1) A date may follow the symbol. (Ex.) 1996.01
Note 2) " XXXXX " and " ZZZZZ " are for parts that could not be predicted or for engine models that could not be identified.
Note 3) (A=E00185) is the E (Engine Serial Number) for the column (A) model (in this case 4JH-DT) after the parts design change.

⑤ Remarks Mark

Figures or alphabets (symbols) are entered in the remarks column.
The comments (remarks) on parts that are indicated at the bottom of the illustration are the same symbols as those stated above.

Contents

Fig. No.	Fig. Name
3TNV82A-BDFS	
1.	CYLINDER BLOCK
2.	GEAR HOUSING
3.	MOUNTING FLANGE & OIL SUMP
4.	CYLINDER HEAD & BONNET
5.	SUCTION MANIFOLD
6.	EXHAUST MANIFOLD
7.	CAMSHAFT & DRIVING GEAR
8.	CRANKSHAFT & PISTON
9.	LUB.OIL SYSTEM
10.	COOLING WATER SYSTEM
11.	FUEL INJECTION PUMP
12.	GOVERNOR
13.	FUEL INJECTION VALVE
14.	STARTING MOTOR
15.	GENERATOR
16.	ACCESSORY PARTS
17.	GASKET SET & TOOLS

Fig. No.	Fig. Name

0CW10-M61500

Fig.1. CYLINDER BLOCK

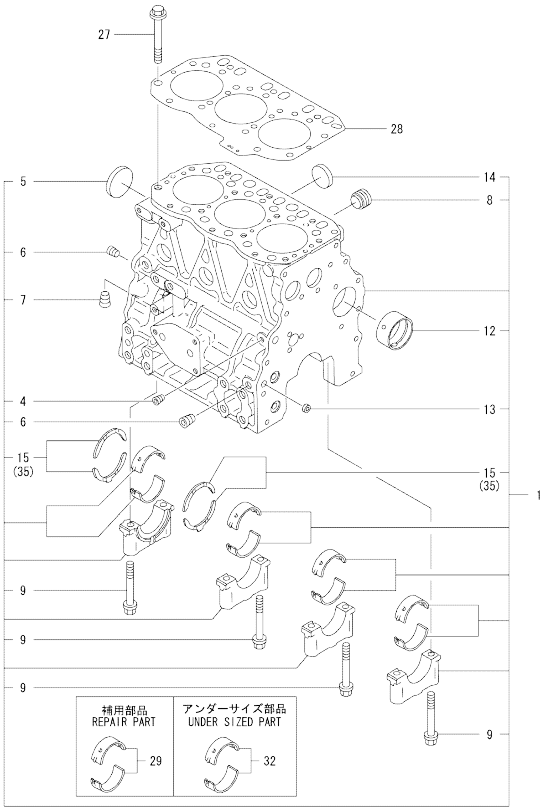

(A)=3TNV82A-BDFS (D)=
(B)=3TNV82A-BDFST (E)=
(C)= (F)=

No.	Lev.	Parts No.	Description	Q'ty (A)	(B)	(C)	(D)	(E)	(F)	I	R
1	1	719802-01560	BLOCK ASSY, CYLINDER	1	1						
4	2	124060-01050	PLUG, PT1/8	1	1						
5	2	129001-01250	PLUG, 50	1	1						
6	2	124160-01910	PLUG, PT1/4	2	2						
7	2	124160-01910	PLUG, PT1/4	1	1						
8	2	171051-01921	PLUG, NPTF1	1	1						
9	2	119620-02020	BOLT, METAL CAP	8	8						
12	2	129795-02412	BUSH, CAMSHAFT	1	1						
13	2	27241-120000	PLUG, 12	2	2						
14	2	27241-300000	PLUG 30	6	6						
15	2	119717-02930	BEARING, THRUST	2	2						
27	1	119810-01200	BOLT, HEAD	14	14						
28	1	119812-01330	GASKET, HEAD	1	1						
29	1	719810-02981	BEARING, MAIN	4	4						1
32	1	119810-02871	BEARING, 0.25 US	4	4						2
35	1	119810-02941	BEARING, THRUST 0.25	2	2						3

Remarks
(1)Repair part.
(2)Under sized(U.S.=0.25) part.
(3)Over sized(O.S.=0.25) part.

N:Old ←Yes/No→ New. Q:Old ←No/Yes→ New, R:Old ←Yes/Yes→ New, S:Old ←No/No→ New, W:Add, Z:Discontinued, F:Interchangeable by set, K:Q'ty Change

Copyright (C) YANMAR CO., LTD. All RightsReserved.

0CW10-M61500

Fig.2. GEAR HOUSING

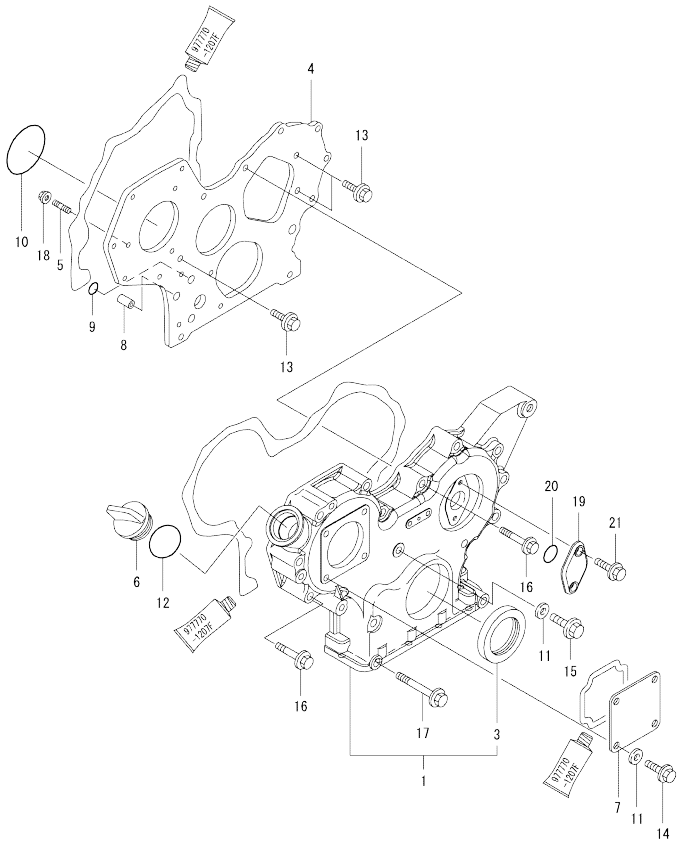

(A)=3TNV82A-BDFS (D)=
(B)=3TNV82A-BDFST (E)=
(C)= (F)=

No.	Lev.	Parts No.	Description	Q'ty (A)	(B)	(C)	(D)	(E)	(F)	I	R
1	1	719803-01500	CASE ASSY, GEAR	1	1						
3	2	119934-01800	SEAL, OIL	1	1						
4	1	119803-01520	FLANGE, GEAR CASE	1	1						
5	1	119802-01561	STUD, M8X25	3	3						
6	1	124160-01751	COVER, FILLER	1	1						
7	1	124240-01871	COVER	1	1						
8	1	129795-01950	PIPE, KNOCK L=18	2	2						
9	1	119609-32040	O-RING, P16	2	2						
10	1	121850-51960	O-RING	1	1						
11	1	22190-080002	WASHER, SEAL 6	5	5						
12	1	24311-000320	O-RING, 1AP32.0	1	1						
13	1	26106-080162	BOLT, M8X 16 PLATED	3	3						
14	1	26106-080162	BOLT, M8X 16 PLATED	4	4						
15	1	26106-080302	BOLT, M8X 30 PLATED	1	1						
16	1	26106-080552	BOLT, M8X 55 PLATED	12	12						
17	1	26106-080852	BOLT, M8X 85 PLATED	3	3						
18	1	26306-080002	NUT, M8	3	3						
19	1	121023-01551	COVER	1	1						
20	1	24341-000240	O-RING, 1AS24.0	1	1						
21	1	26106-060162	BOLT, M6X 16 PLATED	2	2						

N:Old ←Yes/No→ New. Q:Old ←No/Yes→ New. R:Old ←Yes/Yes→ New. S:Old ←No/No→ New. W:Add. Z:Discontinued. F:Interchangeable by set. K:Q'ty Change

Copyright (C) YANMAR CO., LTD. All RightsReserved.

0CW10-M61500

Fig.3. MOUNTING FLANGE & OIL SUMP

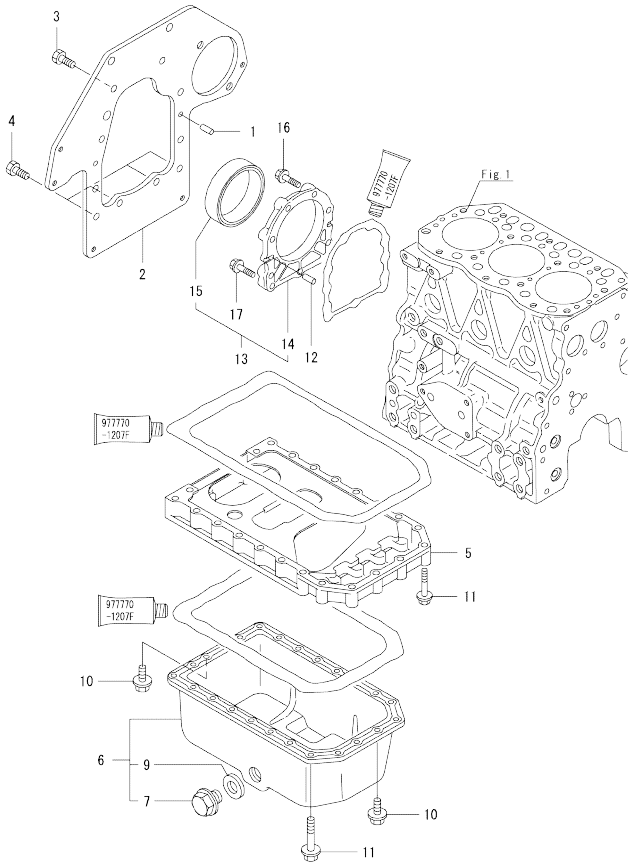

(A)=3TNV82A-BDFS
(B)=3TNV82A-BDFST
(C)=
(D)=
(E)=
(F)=

No.	Lev.	Parts No.	Description	Q'ty (A)	(B)	(C)	(D)	(E)	(F)	I	R
1	1	129100-01580	PIN, M8X16	2	2						
2	1	119820-01600	PLATE	1	1						
3	1	26206-100202	BOLT, M10X 20 PLATED	6	6						
4	1	26206-100252	BOLT, M10X 25 PLATED	4	4						
5	1	119810-01730	SPACER, OIL SUMP	1	1						
6	1	119810-01770	SUMP ASSY, OIL	1	1						
7	2	119640-01640	PLUG, DRAIN M22	1	1						
9	2	22190-220002	WASHER, SEAL 22	1	1						
10	1	26106-080162	BOLT, M8X 16 PLATED	6	6						
11	1	26106-080452	BOLT, M8X 45 PLATED	22	22						
12	1	129100-01580	PIN, M8X16	2	2						
13	1	129100-01640	CASE ASSY, OIL SEAL	1	1						
14	2	129150-01650	CASE, OIL SEAL	1	1						
15	2	129795-01780	SEAL, OIL	1	1						
16	1	129486-01670	BOLT, M8X30	6	6						
17	1	26106-080352	BOLT, M8X 35 PLATED	3	3						

N:Old ←Yes/No→ New. Q:Old ←No/Yes→ New. R:Old ←Yes/Yes→ New. S:Old ←No/No→ New. W:Add. Z:Discontinued. F:Interchangeable by set. K:Q'ty Change

Copyright (C) YANMAR CO., LTD. All RightsReserved.

0CW10-M61500

Fig.4. CYLINDER HEAD & BONNET

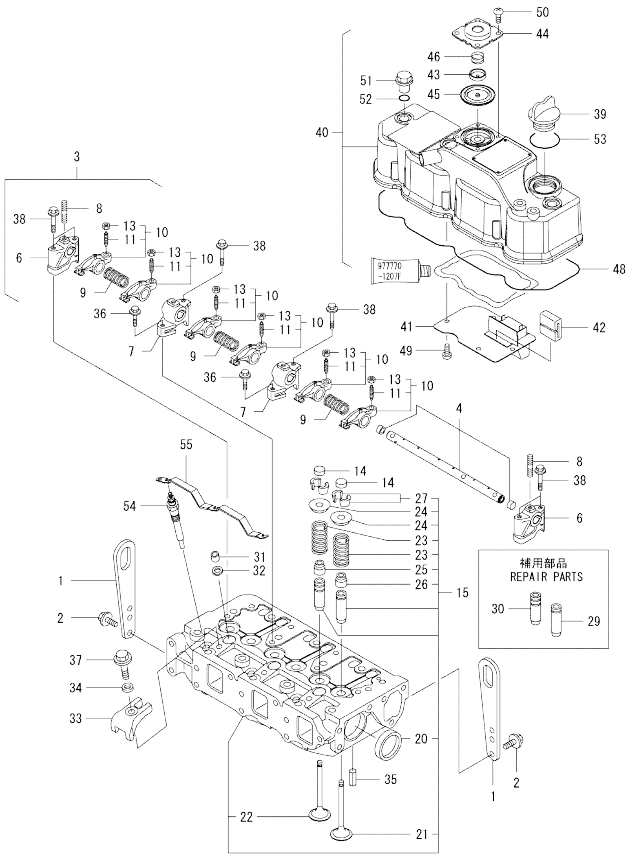

(A)=3TNV82A-BDFS
(B)=3TNV82A-BDFST
(C)=
(D)=
(E)=
(F)=

No.	Lev.	Parts No.	Description	Q'ty (A)	(B)	(C)	(D)	(E)	(F)	I	R
1	1	129900-07900	LIFTER	2	2						
2	1	26106-080162	BOLT, M8X 16 PLATED	4	4						
3	1	119802-11241	SHAFT ASSY, ROCKER	1	1						
4	2	119802-11251	SHAFT, ROCKER ARM	1	1						
6	2	119802-11260	SUPPORT, ROCKER ARM	2	2						
7	2	119802-11270	SUPPORT, ROCKER ARM	2	2						
8	2	119802-11280	STUD	3	3						
9	2	129150-11280	SPRING	3	3						
10	2	119802-11650	ARM, ROCKER	6	6						
11	3	129150-11230	SCREW, VALVE ADJUST	6	6						
13	3	129150-11750	NUT, M8	6	6						
14	1	104211-11370	CAP, VALVE	6	6						
15	1	119803-11700	HEAD ASSY, CYLINDER	1	1						
20	2	27241-400000	PLUG, 40	2	2						
21	2	119802-11100	VALVE, INTAKE	3	3						
22	2	119802-11110	VALVE, EXHAUST	3	3						
23	2	119810-11120	SPRING, VALVE	6	6						
24	2	104211-11180	RETAINER, SPRING	6	6						
25	2	119803-11340	SEAL, VALVE STEM	3	3						
26	2	124160-11340	SEAL, VALVE STEM	3	3						
27	2	27310-070001	COTTER, 7	6	6						
29	1	124060-11800	GUIDE, VALVE	3	3						1
30	1	119802-11810	GUIDE, VALVE	3	3						1
31	1	119802-11870	PROTECTOR, NOZZLE	3	3						
32	1	119625-11880	SEAT, NOZZLE	3	3						
33	1	119802-11900	RETAINER, NOZZLE	3	3						
34	1	120270-54410	WASHER, INJECTOR	3	3						
35	1	22351-060012	PIN, SPRING 6.0X12	2	2						
36	1	26106-080252	BOLT, M8X 25 PLATED	2	2						
37	1	26106-080452	BOLT, M8X 45 PLATED	3	3						
38	1	26106-080502	BOLT, M8X 50 PLATED	6	6						
39	1	124160-01751	COVER, FILLER	1	1						
40	1	119802-11350	BONNET ASSY, HEAD	1	1						
41	2	119802-03010	PLATE	1	1						
42	2	129150-03070	BAFFLE, BREATHER	1	1						
43	2	119802-03110	PLATE	1	1						
44	2	119802-03121	COVER, DIAPHRAGM	1	1						
45	2	119802-03130	DIAPHRAGM	1	1						
46	2	119802-03141	SPRING, DIAPHRAGM	1	1						
48	2	119802-11310	GASKET, BONNET	1	1						
49	2	22857-500100	SCREW, 5X10	4	4						
50	2	22857-500100	SCREW, 5X10	4	4						
51	1	124160-11360	KNOB	3	3						
52	1	24311-000120	O-RING, 1AP12.0	3	3						
53	1	24311-000320	O-RING, 1AP32.0	1	1						
54	1	129008-77800	PLUG, GLOW	3	3						
55	1	119803-77821	CONNECTOR, GLOW PLUG	1	1						

Remarks
(1)Repair part.

N:Old ←Yes/No→ New. Q:Old ←No/Yes→ New. R:Old ←Yes/Yes→ New. S:Old ←No/No→ New. W:Add. Z:Discontinued. F:Interchangeable by set. K:Q'ty Change

Copyright (C) YANMAR CO., LTD. All RightsReserved.

0CW10-M61500

Fig.5. SUCTION MANIFOLD

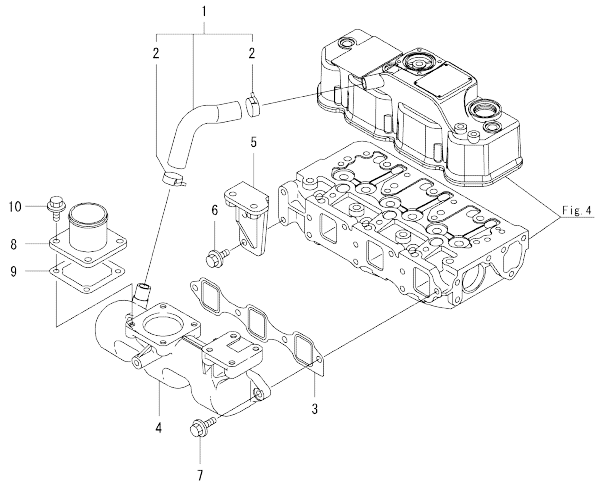

(A)=3TNV82A-BDFS
(B)=3TNV82A-BDFST
(C)=
(D)=
(E)=
(F)=

No.	Lev.	Parts No.	Description	Q'ty (A)	(B)	(C)	(D)	(E)	(F)	I	R
1	1	119802-03090	PIPE , BREATHER	1	1						
2	2	129410-03990	CLIP	2	2						
3	1	119810-12112	GASKET, MANIFOLD	1	1						
4	1	119802-12140	MANIFOLD, AIR INTAKE	1	1						
5	1	119802-55620	BRACKET, FILTER	1	1						
6	1	26106-080162	BOLT, M8X 16 PLATED	2	2						
7	1	26106-080252	BOLT, M8X 25 PLATED	4	4						
8	1	129486-12581	JOINT, MANIFOLD	1	1						
9	1	129150-77511	GASKET	1	1						
10	1	26106-080202	BOLT, M8X 20 PLATED	4	4						

N:Old ←Yes/No→ New. Q:Old ←No/Yes→ New. R:Old ←Yes/Yes→ New. S:Old ←No/No→ New. W:Add. Z:Discontinued. F:Interchangeable by set. K:Q'ty Change

Copyright (C) YANMAR CO., LTD. All RightsReserved.

0CW10-M61500

Fig.6. EXHAUST MANIFOLD

(A)=3TNV82A-BDFS
(B)=3TNV82A-BDFST
(C)=
(D)=
(E)=
(F)=

No.	Lev.	Parts No.	Description	Q'ty (A)	(B)	(C)	(D)	(E)	(F)	I	R
1	1	119810-13100	MANIFOLD, EXHAUST	1	1						
2	1	119810-13110	GASKET	1	1						
3	1	119802-13640	BOLT, M8X60 10.9T	4	4						
4	1	119802-13740	STUD, M8X60	2	2						
5	1	119131-18320	STUD, M8X22	4	4						
6	1	26306-080002	NUT, M8	2	2						
7	1	129004-13200	GASKET, SILENCER	1	1						

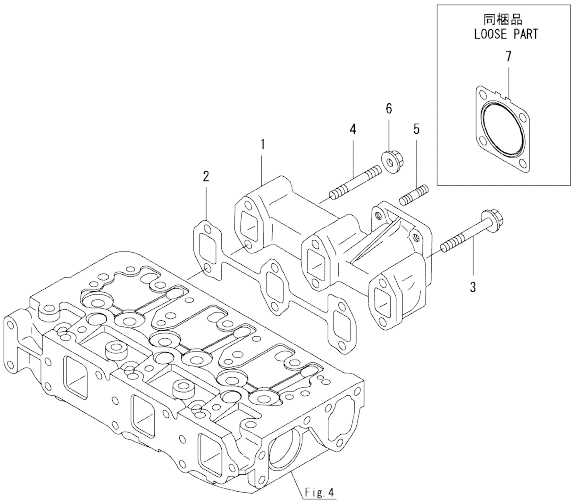

N:Old ←Yes/No→ New. Q:Old ←No/Yes→ New. R:Old ←Yes/Yes→ New. S:Old ←No/No→ New. W:Add. Z:Discontinued. F:Interchangeable by set. K:Q'ty Change

Copyright (C) YANMAR CO., LTD. All RightsReserved.

0CW10-M61500

Fig.7. CAMSHAFT & DRIVING GEAR

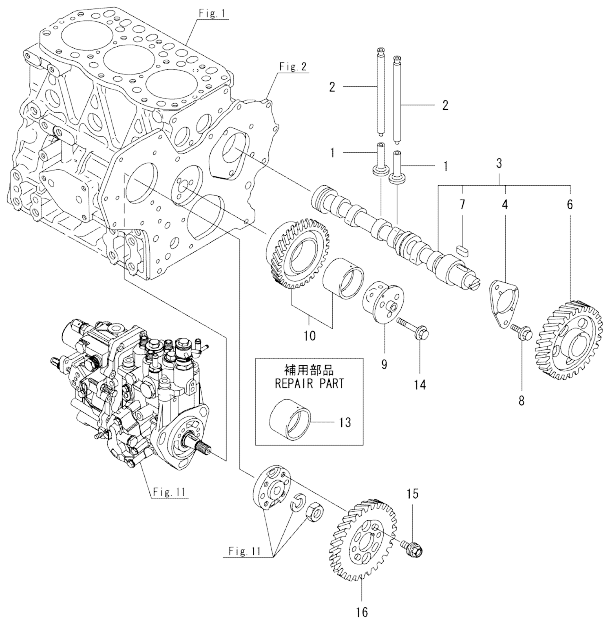

(A)=3TNV82A-BDFS (D)=
(B)=3TNV82A-BDFST (E)=
(C)= (F)=

No.	Lev.	Parts No.	Description	Q'ty (A)	(B)	(C)	(D)	(E)	(F)	I	R
1	1	129150-14200	TAPPET	6	6						
2	1	119810-14400	ROD, PUSH	6	6						
3	1	119802-14580	CAMSHAFT ASSY	1	1						
4	2	129150-02450	BEARING, THRUST	1	1						
6	2	129150-14101	GEAR, CAMSHAFT	1	1						
7	2	22512-070140	KEY, 7X 14	1	1						
8	1	26106-080142	BOLT, M8X 14 PLATED	2	2						
9	1	119803-25050	SHAFT, IDLE	1	1						
10	1	119802-25101	GEAR ASSY, IDLE	1	1						
13	1	119802-25071	BUSH, IDLE GEAR	1	1						1
14	1	26106-080402	BOLT, M8X 40 PLATED	3	3						
15	1	129150-25301	BOLT	4	4						
16	1	119802-25901	GEAR, PUMP	1	1						

Remarks
(1)Repair part.

N:Old $\frac{\text{Yes}}{\text{No}}$ New. Q:Old $\frac{\text{No}}{\text{Yes}}$ New. R:Old $\frac{\text{Yes}}{\text{Yes}}$ New. S:Old $\frac{\text{No}}{\text{No}}$ New. W:Add. Z:Discontinued. F:Interchangeable by set. K:Q'ty Change

Copyright (C) YANMAR CO., LTD. All RightsReserved.

0CW10-M61500

Fig.8. CRANKSHAFT & PISTON

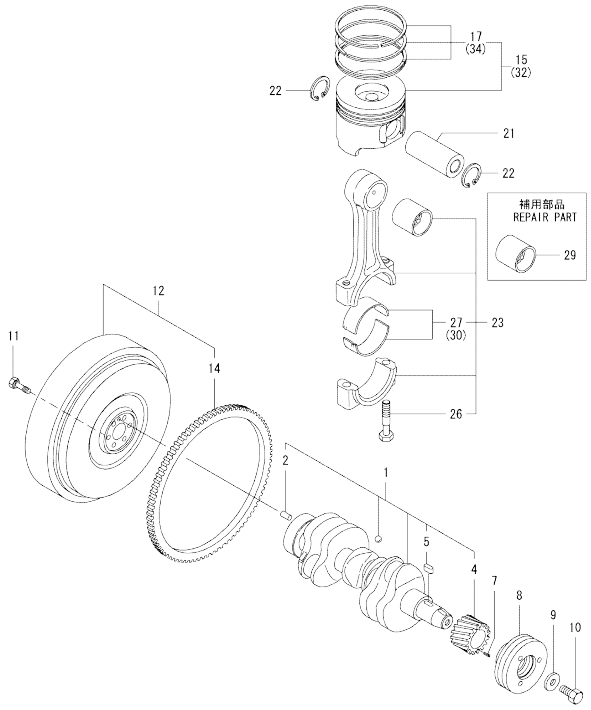

(A)=3TNV82A-BDFS
(B)=3TNV82A-BDFST
(C)=
(D)=
(E)=
(F)=

No.	Lev.	Parts No.	Description	Q'ty (A)	(B)	(C)	(D)	(E)	(F)	I	R
1	1	119803-21000	CRANKSHAFT ASSY	1	1						
2	2	129100-01580	PIN, M8X16	1	1						
4	2	119803-21200	GEAR, CRANKSHAFT	1	1						
5	2	22512-070140	KEY, 7X 14	1	1						
7	1	22351-030010	PIN, SPRING 3.0X10	1	1						
8	1	119802-21650	V-PULLEY, 110	1	1						
9	1	129795-21661	WASHER	1	1						
10	1	121850-21680	BOLT	1	1						
11	1	121111-21501	BOLT, FLYWHEEL	6	6						
12	1	171420-21580	FLYWHEEL ASSY	1	1						
14	2	119865-21600	GEAR, RING	1	1						
15	1	119803-22080	PISTON ASSY	3	3						
17	2	119802-22500	RING SET, PISTON	3	3						
21	1	119813-22300	PIN, PISTON	3	3						
22	1	129792-22400	CIRCLIP, 23	6	6						
23	1	719810-23100	ROD ASSY, CONNECTING	3	3						
26	2	119810-23200	BOLT, CONNECTING ROD	6	6						
27	2	119810-23601	BEARING, CRANK PIN	3	3						
29	1	119810-23910	BEARING, PISTON PIN	3	3						1
30	1	119810-23611	BEARING, 0.25 US	3	3						2
32	1	719803-22900	PISTON ASSY, 0.25 OS	3	3						3
34	2	119802-22950	RING SET, 0.25 OS	3	3						3

Remarks
(1)Repair part.
(2)Under sized(U.S.=0.25) part.
(3)Over sized(O.S.=0.25) part.

N:Old ←Yes/No→ New. Q:Old ←No/Yes→ New, R:Old ←Yes/Yes→ New. S:Old ←No/No→ New. W:Add. Z:Discontinued. F:Interchangeable by set. K:Q'ty Change

Copyright (C) YANMAR CO., LTD. All RightsReserved.

0CW10-M61500

Fig.9. LUB.OIL SYSTEM

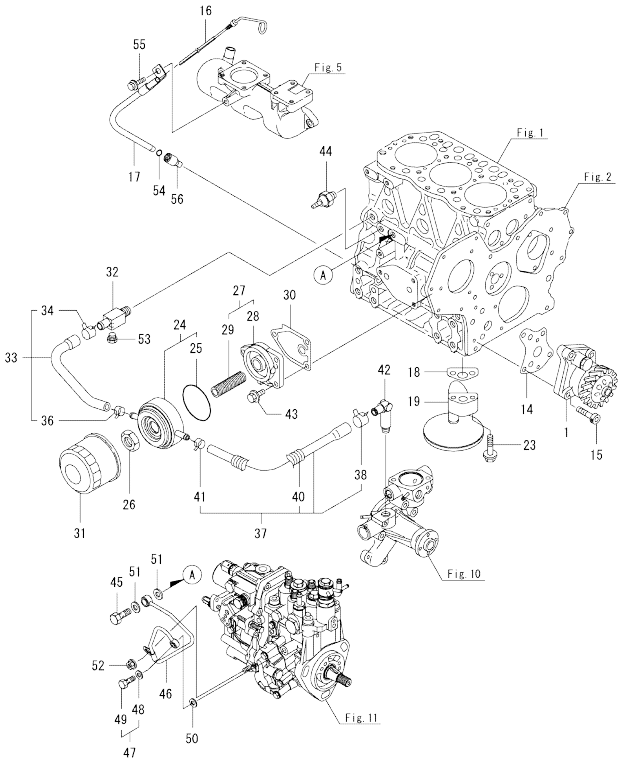

(A)=3TNV82A-BDFS
(B)=3TNV82A-BDFST
(C)=
(D)=
(E)=
(F)=

No.	Lev.	Parts No.	Description	Q'ty (A)	(B)	(C)	(D)	(E)	(F)	I	R
1	1	129001-32001	PUMP ASSY, OIL	1	1						
14	1	129150-32020	GASKET, PUMP	1	1						
15	1	26450-060252	BOLT, M6X 25	4	4						
16	1	119802-34821	DIPSTICK, OIL	1	1						
17	1	119802-34850	GUIDE, DIPSTICK	1	1						
18	1	129150-35042	GASKET	1	1						
19	1	119810-35300	PIPE ASSY, OIL INLET	1	1						
23	1	26106-080352	BOLT, M8X 35 PLATED	2	2						
24	1	129508-33010	COOLER ASSY, OIL	1	1						
25	2	129508-33050	O-RING	1	1						
26	1	129417-33110	NUT	1	1						
27	1	129006-35100	BRACKET ASSY, FILTER	1	1						
28	2	119802-35110	BRACKET, FILTER	1	1						
29	2	129417-35150	STUD, L=67	1	1						
30	1	129150-35111	GASKET	1	1						
31	1	129150-35153	FILTER	1	1						1
32	1	129006-44480	JOINT	1	1						
33	1	129508-49030	PIPE ASSY, WATER	1	1						
34	2	171008-03990	CLIP, HOSE 18.5	1	1						
36	2	23080-015000	CLAMP, 15	1	1						
37	1	129508-49040	PIPE ASSY, WATER	1	1						
38	2	171008-03990	CLIP, HOSE 18.5	1	1						
40	2	119940-59130	TUBE, CORRUGATED	1	1						
41	2	23080-015000	CLAMP, 15	1	1						
42	1	119944-49300	ELBOW, PT3/8	1	1						
43	1	26106-080202	BOLT, M8X 20 PLATED	3	3						
44	1	114250-39450	SWITCH, 0.5KG	1	1						
45	1	124160-39140	BOLT, PIPE JOINT M10	1	1						
46	1	119802-39450	PIPE ASSY, OIL	1	1						
47	1	129005-59830	BOLT ASSY, JOINT M8	1	1						
48	2	22190-080002	WASHER, SEAL 6	1	1						
49	2	23857-030000	BOLT, JOINT 3	1	1						
50	1	22190-080002	WASHER, SEAL 6	1	1						
51	1	22190-100002	WASHER, SEAL 10	2	2						
52	1	26366-060002	NUT, M6	1	1						
53	1	171056-49120	PLUG, DRAIN	1	1						
54	1	24316-240100	O-RING, 4DP10A	1	1						
55	1	26106-080162	BOLT, M8X 16 PLATED	1	1						
56	1	119260-34810	GUIDE, DIPSTICK	1	1						

Remarks
(1)Repair part.

N:Old $\xleftarrow[\text{No}]{\text{Yes}}$ New. Q:Old $\xleftarrow[\text{Yes}]{\text{No}}$ New. R:Old $\xleftarrow[\text{Yes}]{\text{Yes}}$ New. S:Old $\xleftarrow[\text{No}]{\text{No}}$ New. W:Add. Z:Discontinued. F:Interchangeable by set. K:Q'ty Change

Copyright (C) YANMAR CO., LTD. All RightsReserved.

0CW10-M61500

Fig.10. COOLING WATER SYSTEM

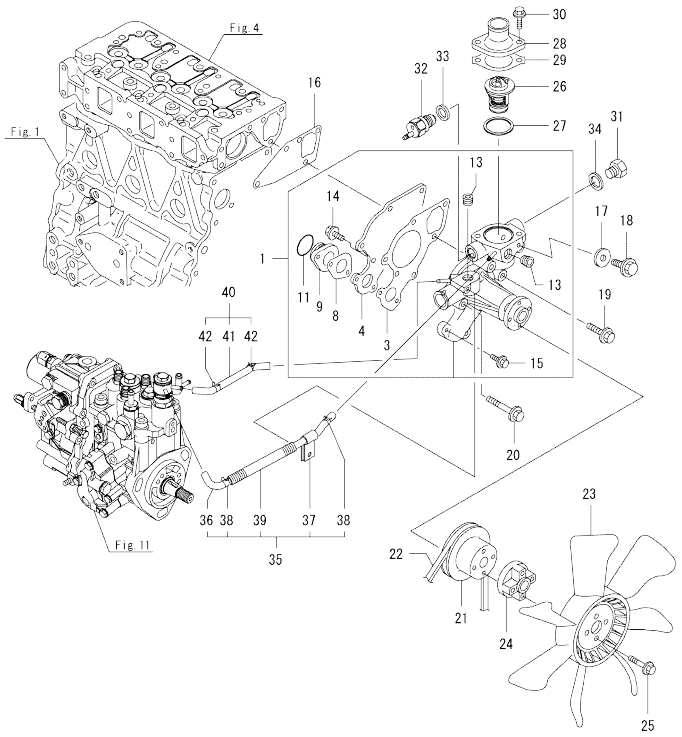

(A)=3TNV82A-BDFS (D)=
(B)=3TNV82A-BDFST (E)=
(C)= (F)=

No.	Lev.	Parts No.	Description	Q'ty (A)	(B)	(C)	(D)	(E)	(F)	I	R
1	1	119802-42001	PUMP ASSY, WATER	1	1						
3	2	119810-42051	GASKET, WATER PUMP	1	1						
4	2	119810-42120	PLATE	1	1						
8	2	119810-42281	GASKET, WATER PUMP	1	1						
9	2	119810-42290	PIPE	1	1						
11	2	129054-42320	O-RING	1	1						
13	2	23876-030000	PLUG, R03	2	2						
14	2	26106-060142	BOLT, M6X 14 PLATED	2	2						
15	2	26106-060202	BOLT, M6X 20 PLATED	2	2						
16	1	129486-42050	GASKET, WATER PUMP	1	1						
17	1	23414-080000	GASKET, 8X1.0	1	1						
18	1	26106-080122	BOLT, M8X 12 PLATED	1	1						
19	1	26106-080352	BOLT, M8X 35 PLATED	1	1						
20	1	26106-080552	BOLT, M8X 55 PLATED	3	3						
21	1	129403-42380	V-PULLEY, D=110	1	1						
22	1	25132-003900	V-BELT, A39	1	1						
23	1	129120-44741	FAN, COOLING 360	1	1						
24	1	171353-44760	SPACER, FAN	1	1						
25	1	26106-060402	BOLT, M6X 40 PLATED	4	4						
26	1	129155-49801	THERMOSTAT, 71	1	1						
27	1	129150-49811	GASKET, THERMOSTAT	1	1						
28	1	129350-49530	COVER, THERMOSTAT	1	1						
29	1	129795-49551	GASKET	1	1						
30	1	26106-080222	BOLT, M8X 22 PLATED	2	2						
31	1	121450-42450	PLUG, M16	1	1						
32	1	121250-44901	SWITCH, 110	1	1						
33	1	124465-44950	GASKET, 16	1	1						
34	1	124465-44950	GASKET, 16	1	1						
35	1	119802-49610	PIPE ASSY, WATER	1	1						
36	2	119802-49711	PIPE ASSY, WATER	1	1						
37	2	119802-49730	RETAINER, PIPE	1	1						
38	2	124722-59050	CLIP, HOSE 9	2	2						
39	2	119802-59320	TUBE, CORRUGATED	1	1						
40	1	119802-49620	PIPE ASSY, WATER	1	1						
41	2	119802-49721	PIPE ASSY, WATER	1	1						
42	2	124722-59050	CLIP, HOSE 9	2	2						

N:Old ◄Yes/No► New. Q:Old ◄No/Yes► New. R:Old ◄Yes/Yes► New. S:Old ◄No/No► New. W:Add. Z:Discontinued. F:Interchangeable by set. K:Q'ty Change

Copyright (C) YANMAR CO., LTD. All RightsReserved.

0CW10-M61500

Fig.11. FUEL INJECTION PUMP

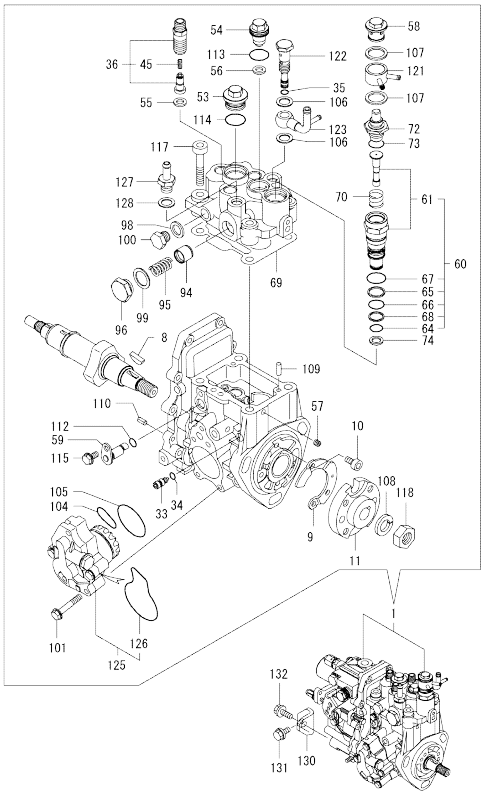

Remarks
(1)Governor ASSY(Fig.12) is incorporated in this FOP CMP. (Ref.No.1).

(A)=3TNV82A-BDFS
(B)=3TNV82A-BDFST
(C)=
(D)=
(E)=
(F)=

No.	Lev.	Parts No.	Description	Q'ty (A)	(B)	(C)	(D)	(E)	(F)	I	R
1	1	719980-51391	PUMP ASSY, INJECTION	1	1						1
8	2	119802-51090	KEY, 4X16	1	1						
9	2	129008-51900	COVER, GEAR CASE	1	1						
10	2	129008-51920	BOLT, M6X10	2	2						
11	2	158552-51151	FLANGE	1	1						
33	2	158600-51270	STOPPER, TAPPET	1	1						
34	2	158563-51281	O-RING, 4D S6	1	1						
35	2	158563-51281	O-RING, 4D S6	1	1						
36	2	129008-51390	VALVE ASSY, DELIVERY	3	3						
45	3	158563-51330	SPRING, DELIVERY	3	3						
53	2	158601-51550	PLUG	1	1						
54	2	119802-51560	PLUG, BARREL	1	1						
55	2	158552-51571	GASKET	3	3						
56	2	158552-51571	GASKET	1	1						
57	2	158557-51570	PLUG	1	1						
58	2	158601-51570	PLUG	1	1						
59	2	158552-51580	LIFTER	1	1						
60	2	119802-51590	TIMER SET	1	1						
61	3	119802-51600	TIMER ASSY	1	1						
64	3	158553-51670	O-RING, 1011	1	1						
65	3	119802-51680	RING, BACK UP	1	1						
66	3	119802-51690	O-RING	1	1						
67	3	24356-190200	O-RING, 4D19020	1	1						
68	3	24372-000150	RING, BACK UP T2P15	1	1						
69	2	158552-51600	GASKET	1	1						
70	2	158553-51630	SPRING, TIMER	1	1						
72	2	158553-51650	ELEMENT	1	1						
73	2	158553-51660	O-RING, P14	1	1						
74	2	158553-51680	GASKET	1	1						
94	2	158601-51770	PISTON	1	1						
95	2	158552-51781	SPRING	1	1						
96	2	158601-51790	PLUG	1	1						
98	2	22190-120002	WASHER, SEAL 12	1	1						
99	2	22190-180002	WASHER, SEAL 18	1	1						
100	2	158553-51930	PLUG, M12	1	1						
101	2	158553-51770	BOLT	4	4						
104	2	158552-52311	O-RING	1	1						
105	2	158552-52400	O-RING, 4E S42	1	1						
106	2	22190-120002	WASHER, SEAL 12	2	2						
107	2	22190-180002	WASHER, SEAL 18	2	2						
108	2	22217-140000	WASHER, SPRING 14	1	1						
109	2	22312-050140	PIN, PARALLEL M5X14	2	2						
110	2	22351-050010	PIN, SPRING 5.0X10	2	2						
112	2	24311-000070	O-RING, 1AP7.0	1	1						
113	2	24356-190180	O-RING, 4D19018	1	1						
114	2	24356-190200	O-RING, 4D19020	1	1						
115	2	26106-060102	BOLT, M6X 10 PLATED	1	1						
117	2	26450-080452	BOLT, M8X 45	4	4						
118	2	26776-140002	NUT, LOCK M14	1	1						
121	2	158553-51551	JOINT	1	1						
122	2	158601-51650	JOINT, OVER FLOW	1	1						

N:Old ←Yes/No→ New. Q:Old ←No/Yes→ New. R:Old ←Yes/Yes→ New. S:Old ←No/No→ New. W:Add. Z:Discontinued. F:Interchangeable by set. K:Q'ty Change

++ CONTINUE ++

Copyright (C) YANMAR CO., LTD. All RightsReserved.

0CW10-M61500

Fig.11. FUEL INJECTION PUMP

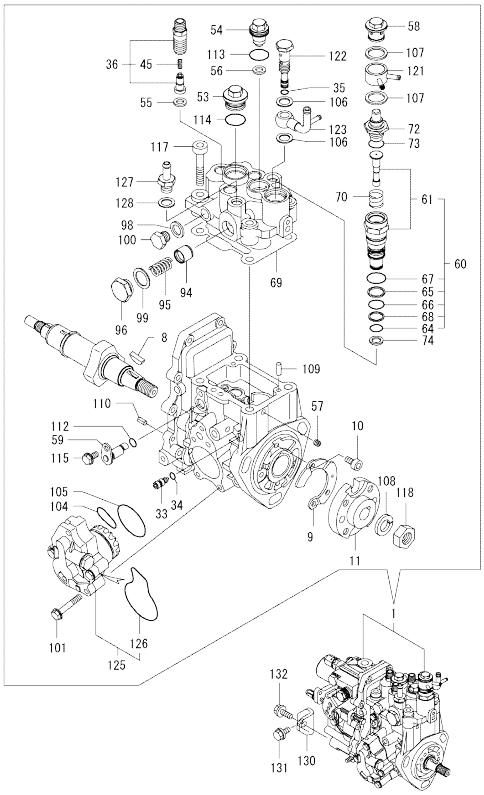

Remarks
(1)Governor ASSY(Fig.12) is incorporated in this FOP CMP. (Ref.No.1).

(A)=3TNV82A-BDFS
(B)=3TNV82A-BDFST
(C)=
(D)=
(E)=
(F)=

No.	Lev.	Parts No.	Description	Q'ty (A)	(B)	(C)	(D)	(E)	(F)	I	R
123	2	158552-51670	JOINT, OVER FLOW	1	1						
125	2	158552-52100	PUMP ASSY, FUEL FEED	1	1						
126	3	158552-52500	O-RING	1	1						
127	2	119934-59910	JOINT, PIPE	1	1						
128	2	22190-120002	WASHER, SEAL 12	1	1						
130	1	119802-51250	RETAINER, PUMP	1	1						
131	1	26106-080162	BOLT, M8X 16 PLATED	1	1						
132	1	26106-080202	BOLT, M8X 20 PLATED	1	1						

N:Old ←Yes/No→ New. Q:Old ←No/Yes→ New. R:Old ←Yes/Yes→ New. S:Old ←No/No→ New. W:Add. Z:Discontinued. F:Interchangeable by set. K:Q'ty Change

Copyright (C) YANMAR CO., LTD. All RightsReserved.

0CW10-M61500

Fig.12. GOVERNOR

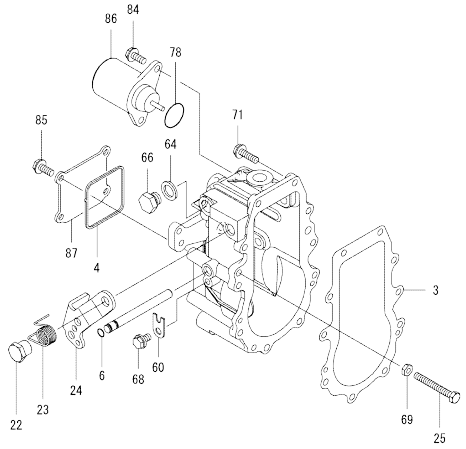

(A)=3TNV82A-BDFS (D)=
(B)=3TNV82A-BDFST (E)=
(C)= (F)=

No.	Lev.	Parts No.	Description	Q'ty (A)	(B)	(C)	(D)	(E)	(F)	I	R
3	2	158553-61050	GASKET	1	1						
4	2	158553-61070	GASKET	1	1						
6	2	129155-51280	O-RING, S6	1	1						
22	2	129255-61410	NUT, LOCK	1	1						
23	2	119807-61420	SPRING, RETURN	1	1						
24	2	158552-61441	LEVER, REGULATOR	1	1						
25	2	129155-61460	BOLT, IDLE	1	1						
60	2	119660-61901	RETAINER, SHAFT	1	1						
64	2	22190-120002	WASHER, SEAL 12	1	1						
66	2	158553-51930	PLUG, M12	1	1						
68	2	26106-060102	BOLT, M6X 10 PLATED	1	1						
69	2	26756-060002	NUT, LOCK M6	1	1						
71	2	26106-060202	BOLT, M6X 20 PLATED	10	10						
78	2	158552-61900	O-RING	1	1						
84	2	26106-060142	BOLT, M6X 14 PLATED	2	2						
85	2	26106-060142	BOLT, M6X 14 PLATED	4	4						
86	2	119653-77950	SOLENOID, STOP	1	1						
87	2	129642-61060	COVER, GOVERNOR CASE	1	1						

Remarks
* This figure(governor ASSY) is incorporated in the fuel injection pump ASSY(Fig.11).

N:Old ←Yes/No→ New. Q:Old ←No/Yes→ New, R:Old ←Yes/Yes→ New, S:Old ←No/No→ New, W:Add, Z:Discontinued, F:Interchangeable by set, K:Q'ty Change

Copyright (C) YANMAR CO., LTD. All RightsReserved.

0CW10-M61500

Fig.13. FUEL INJECTION VALVE

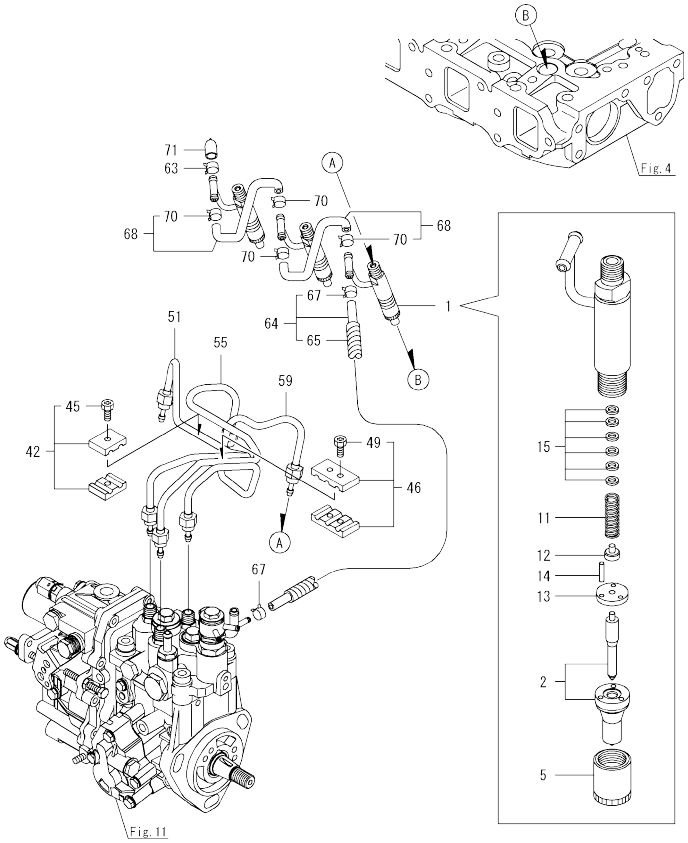

(A)=3TNV82A-BDFS
(B)=3TNV82A-BDFST
(C)=
(D)=
(E)=
(F)=

No.	Lev.	Parts No.	Description	Q'ty (A)	(B)	(C)	(D)	(E)	(F)	I	R
1	1	729008-53100	VALVE ASSY,INJECTION	3	3						
2	2	129008-53000	VALVE ASSY,INJECTION	3	3						
5	2	114250-53080	NUT, NOZZLE D16.95	3	3						
11	2	114250-53120	SPRING, NOZZLE	3	3						
12	2	114250-53130	SEAT, SPRING	3	3						
13	2	114250-53140	PLATE	3	3						
14	2	114250-53210	PIN	6	6						
15	2	119803-53400	SHIM SET	3	3						
42	1	119305-59120	RETAINER, PIPE	1	1						
45	2	129150-59131	BOLT, M4X14	1	1						
46	1	129150-59120	RETAINER, PIPE	1	1						
49	2	129150-59131	BOLT, M4X14	2	2						
51	1	119802-59960	PIPE ASSY, INJECTION	1	1						
55	1	119802-59970	PIPE ASSY, INJECTION	1	1						
59	1	119802-59980	PIPE ASSY, INJECTION	1	1						
63	1	124060-77680	CLIP, HOSE 10	1	1						
64	1	129268-59551	PIPE ASSY, RETURN	1	1						
65	2	129237-59120	PROTECTOR,HOSE	1	1						
67	2	124060-77680	CLIP, HOSE 10	2	2						
68	1	129486-59581	HOSE, FUEL	2	2						
70	2	124060-77680	CLIP, HOSE 10	4	4						
71	1	119593-59581	CAP	1	1						

N:Old ←Yes/No→ New. Q:Old ←No/Yes→ New. R:Old ←Yes/Yes→ New. S:Old ←No/No→ New. W:Add. Z:Discontinued. F:Interchangeable by set. K:Q'ty Change

Copyright (C) YANMAR CO., LTD. All RightsReserved.

0CW10-M61500

Fig.14. STARTING MOTOR

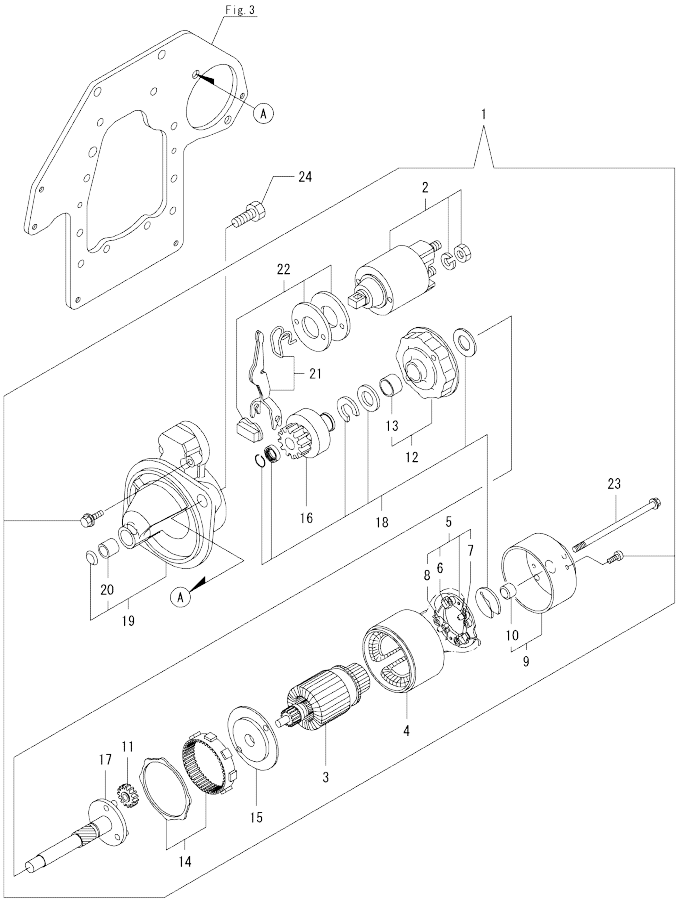

(A)=3TNV82A-BDFS (D)=
(B)=3TNV82A-BDFST (E)=
(C)= (F)=

No.	Lev.	Parts No.	Description	Q'ty (A)	(B)	(C)	(D)	(E)	(F)	I	R
1	1	129242-77010	STARTER	1	1						
2	2	129698-77020	SWITCH ASSY	1	1						
3	2	129242-77100	ARMATURE ASSY	1	1						
4	2	129242-77110	YOKE ASSY	1	1						
5	2	129242-77120	HOLDER ASSY, BRUSH	1	1						
6	3	129242-77130	BRUSH	2	2						
7	3	129242-77140	BRUSH SET	1	1						
8	3	129242-77150	SPRING	4	4						
9	2	129242-77160	COVER ASSY	1	1						
10	3	129242-77170	METAL	1	1						
11	2	118400-77170	GEAR	3	3						
12	2	129242-77180	BRACKET	1	1						
13	3	129698-77190	BRACKET	1	1						
14	2	129698-77200	GEAR, INTERNAL	1	1						
15	2	129242-77210	BRACKET	1	1						
16	2	129698-77220	PINION ASSY	1	1						
17	2	129698-77230	SHAFT	1	1						
18	2	129698-77250	WASHER SET	1	1						
19	2	129242-77260	CASE ASSY	1	1						
20	3	X2114535200	METAL, STARTER	1	1						
21	2	129242-77270	LEVER SET	1	1						
22	2	129242-77280	COVER ASSY, DUST	1	1						
23	2	124195-77770	BOLT, THROUGH	2	2						
24	1	26116-120202	BOLT, M12X 20 PLATED	2	2						

N:Old ←Yes/No→ New. Q:Old ←No/Yes→ New. R:Old ←Yes/Yes→ New. S:Old ←No/No→ New. W:Add. Z:Discontinued. F:Interchangeable by set. K:Q'ty Change

Copyright (C) YANMAR CO., LTD. All RightsReserved.

0CW10-M61500

Fig.15. GENERATOR

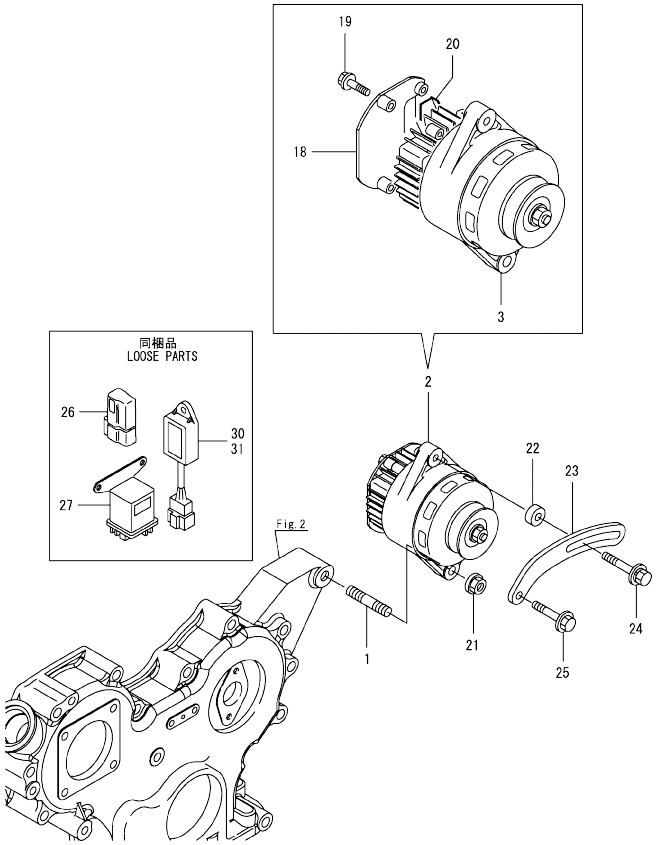

(A)=3TNV82A-BDFS
(B)=3TNV82A-BDFST
(C)=
(D)=
(E)=
(F)=

No.	Lev.	Parts No.	Description	Q'ty (A)	(B)	(C)	(D)	(E)	(F)	I	R
1	1	129795-01900	STUD	1	1						
2	1	119128-77200	GENERATOR, 12V-40A	1	1						
3	2	119128-77220	GENERATOR ASSY	1	1						
18	2	119128-77370	COVER	1	1						
19	2	119128-77380	BOLT, FLANGE	4	4						
20	2	119128-77390	COVER	1	1						
21	1	26306-100002	NUT, M10	1	1						
22	1	119940-77270	SPACER, GENERATOR	1	1						
23	1	119802-77330	ADJUSTER	1	1						
24	1	129972-77341	BOLT, ADJUSTER L=50	1	1						
25	1	26106-080452	BOLT, M8X 45 PLATED	1	1						
26	1	119643-66900	DIODE	1	1						
27	1	119650-77910	RELAY ASSY, GLOW	1	1						
30	1	128300-77920	TIMER	1	1						
31	1	129211-77920	TIMER	1	1						

N:Old ←Yes/No→ New. Q:Old ←No/Yes→ New. R:Old ←Yes/Yes→ New. S:Old ←No/No→ New. W:Add. Z:Discontinued. F:Interchangeable by set. K:Q'ty Change

Copyright (C) YANMAR CO., LTD. All RightsReserved.

0CW10-M61500

Fig.16. ACCESSORY PARTS

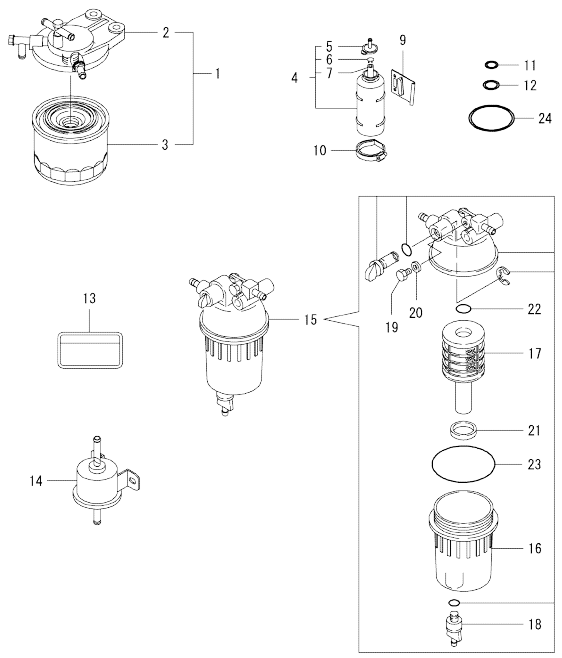

(A)=3TNV82A-BDFS (D)=
(B)=3TNV82A-BDFST (E)=
(C)= (F)=

No.	Lev.	Parts No.	Description	Q'ty (A)	(B)	(C)	(D)	(E)	(F)	I	R
1	1	129940-55601	FILTER ASSY, FUEL	1	1						
2	2	129004-55612	BRACKET, FILTER	1	1						
3	2	119802-55801	FILTER, FUEL	1	1						
4	1	124450-44510	TANK ASSY, SUB	1	1						
5	2	124450-44530	CAP	1	1						
6	2	124450-44560	RETAINER	1	1						
7	2	23061-070230	PIPE, 7X 230	1	1						
9	1	121256-44600-3	BRACKET	1	1						
10	1	124450-44550	BAND	1	1						
11	1	24316-000070	O-RING, 4DP7.0	1	1						
12	1	24316-000160	O-RING, 4DP16.0	1	1						
13	1	114110-07760	LABEL, FUEL CAUTION	1	1						
14	1	119225-52102	PUMP ASSY, FUEL FEED	1	1						
15	1	129242-55700	SEPARATOR ASSY	1	1						
16	2	129242-55720	CUP	1	1						
17	2	129242-55730	ELEMENT	1	1						
18	2	129242-55740	PLUG, DRAIN	1	1						
19	2	129242-55750	VALVE, AIR VENT	1	1						
20	2	129242-55760	GASKET	1	1						
21	2	129242-55770	FLOAT	1	1						
22	2	24311-000160	O-RING, 1AP16.0	1	1						
23	2	24321-000750	O-RING, 1AG75.0	1	1						
24	1	24326-000750	O-RING, 4DG75.0	1	1						

N:Old ←Yes/No→ New. Q:Old ←No/Yes→ New. R:Old ←Yes/Yes→ New. S:Old ←No/No→ New. W:Add. Z:Discontinued. F:Interchangeable by set. K:Q'ty Change

Copyright (C) YANMAR CO., LTD. All RightsReserved.

0CW10-M61500

Fig.17. GASKET SET & TOOLS

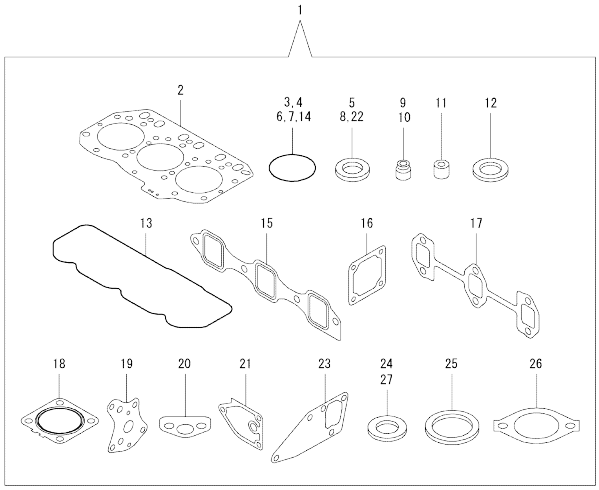

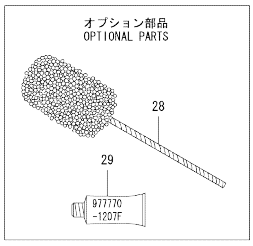

(A)=3TNV82A-BDFS
(B)=3TNV82A-BDFST
(C)=
(D)=
(E)=
(F)=

No.	Lev.	Parts No.	Description	Q'ty (A)	(B)	(C)	(D)	(E)	(F)	I	R
1	1	719812-92700	GASKET SET	1	1						1
2	2	119812-01330	GASKET, HEAD	1	1						
3	2	119609-32040	O-RING, P16	2	2						
4	2	121850-51960	O-RING	1	1						
5	2	22190-080002	WASHER, SEAL 6	7	7						
6	2	24311-000320	O-RING, 1AP32.0	2	2						
7	2	24341-000240	O-RING, 1AS24.0	1	1						
8	2	22190-220002	WASHER, SEAL 22	1	1						
9	2	119803-11340	SEAL, VALVE STEM	3	3						
10	2	124160-11340	SEAL, VALVE STEM	3	3						
11	2	119802-11870	PROTECTOR, NOZZLE	3	3						
12	2	119625-11880	SEAT, NOZZLE	3	3						
13	2	119802-11310	GASKET, BONNET	1	1						
14	2	24311-000120	O-RING, 1AP12.0	3	3						
15	2	119810-12112	GASKET, MANIFOLD	1	1						
16	2	129150-77511	GASKET	1	1						
17	2	119810-13110	GASKET	1	1						
18	2	129004-13200	GASKET, SILENCER	1	1						
19	2	129150-32020	GASKET, PUMP	1	1						
20	2	129150-35042	GASKET	1	1						
21	2	129150-35111	GASKET	1	1						
22	2	22190-100002	WASHER, SEAL 10	2	2						
23	2	129486-42050	GASKET, WATER PUMP	1	1						
24	2	23414-080000	GASKET, 8X1.0	1	1						
25	2	129150-49811	GASKET, THERMOSTAT	1	1						
26	2	129795-49551	GASKET	1	1						
27	2	124465-44950	GASKET, 16	2	2						
28	1	129400-92420	HONE	1	1						1
29	1	977770-1207F	GASKET.LIQUID	1	1						1

Remarks
(1)Optional parts.

N:Old ◄Yes/No► New. Q:Old ◄No/Yes► New. R:Old ◄Yes/Yes► New. S:Old ◄No/No► New. W:Add. Z:Discontinued. F:Interchangeable by set. K:Q'ty Change

Copyright (C) YANMAR CO., LTD. All RightsReserved.

Parts No. Index

Parts No.	Fig. No.	Ref. No.
104211-11180	4	24
104211-11370	4	14
114110-07760	16	13
114250-39450	9	44
114250-53080	13	5
114250-53120	13	11
114250-53130	13	12
114250-53140	13	13
114250-53210	13	14
118400-77170	14	11
119128-77200	15	2
119128-77220	15	3
119128-77370	15	18
119128-77380	15	19
119128-77390	15	20
119131-18320	6	5
119225-52102	16	14
119260-34810	9	56
119305-59120	13	42
119593-59581	13	71
119609-32040	2	9
	17	3
119620-02020	1	9
119625-11880	4	32
	17	12
119640-01640	3	7
119643-66900	15	26
119650-77910	15	27
119653-77950	12	86
119660-61901	12	60
119717-02930	1	15
119802-01561	2	5
119802-03010	4	41
119802-03090	5	1
119802-03110	4	43
119802-03121	4	44
119802-03130	4	45
119802-03141	4	46
119802-11100	4	21
119802-11110	4	22
119802-11241	4	3
119802-11251	4	4
119802-11260	4	6
119802-11270	4	7
119802-11280	4	8
119802-11310	4	48
	17	13
119802-11350	4	40
119802-11650	4	10
119802-11810	4	30

Parts No.	Fig. No.	Ref. No.
119802-11870	4	31
	17	11
119802-11900	4	33
119802-12140	5	4
119802-13640	6	3
119802-13740	6	4
119802-14580	7	3
119802-21650	8	8
119802-22500	8	17
119802-22950	8	34
119802-25071	7	13
119802-25101	7	10
119802-25901	7	16
119802-34821	9	16
119802-34850	9	17
119802-35110	9	28
119802-39450	9	46
119802-42001	10	1
119802-49610	10	35
119802-49620	10	40
119802-49711	10	36
119802-49721	10	41
119802-49730	10	37
119802-51090	11	8
119802-51250	11	130
119802-51560	11	54
119802-51590	11	60
119802-51600	11	61
119802-51680	11	65
119802-51690	11	66
119802-55620	5	5
119802-55801	16	3
119802-59320	10	39
119802-59960	13	51
119802-59970	13	55
119802-59980	13	59
119802-77330	15	23
119803-01520	2	4
119803-11340	4	25
	17	9
119803-11700	4	15
119803-21000	8	1
119803-21200	8	4
119803-22080	8	15
119803-25050	7	9
119803-53400	13	15
119803-77821	4	55
119807-61420	12	23
119810-01200	1	27
119810-01730	3	5

Parts No.	Fig. No.	Ref. No.
119810-01770	3	6
119810-02871	1	32
119810-02941	1	35
119810-11120	4	23
119810-12112	5	3
	17	15
119810-13100	6	1
119810-13110	6	2
	17	17
119810-14400	7	2
119810-23200	8	26
119810-23601	8	27
119810-23611	8	30
119810-23910	8	29
119810-35300	9	19
119810-42051	10	3
119810-42120	10	4
119810-42281	10	8
119810-42290	10	9
119812-01330	1	28
	17	2
119813-22300	8	21
119820-01600	3	2
119865-21600	8	14
119934-01800	2	3
119934-59910	11	127
119940-59130	9	40
119940-77270	15	22
119944-49300	9	42
120270-54410	4	34
121023-01551	2	19
121111-21501	8	11
121250-44901	10	32
121256-44600-3	16	9
121450-42450	10	31
121850-21680	8	10
121850-51960	2	10
	17	4
124060-01050	1	4
124060-11800	4	29
124060-77680	13	63
		67
		70
124160-01751	2	6
	4	39
124160-01910	1	6
		7
124160-11340	4	26
	17	10
124160-11360	4	51

Parts No.	Fig. No.	Ref. No.
124160-39140	9	45
124195-77770	14	23
124240-01871	2	7
124450-44510	16	4
124450-44530	16	5
124450-44550	16	10
124450-44560	16	6
124465-44950	10	33
		34
	17	27
124722-59050	10	38
		42
128300-77920	15	30
129001-01250	1	5
129001-32001	9	1
129004-13200	6	7
	17	18
129004-55612	16	2
129005-59830	9	47
129006-35100	9	27
129006-44480	9	32
129008-51390	11	36
129008-51900	11	9
129008-51920	11	10
129008-53000	13	2
129008-77800	4	54
129054-42320	10	11
129100-01580	3	1
		12
	8	2
129100-01640	3	13
129120-44741	10	23
129150-01650	3	14
129150-02450	7	4
129150-03070	4	42
129150-11230	4	11
129150-11280	4	9
129150-11750	4	13
129150-14101	7	6
129150-14200	7	1
129150-25301	7	15
129150-32020	9	14
	17	19
129150-35042	9	18
	17	20
129150-35111	9	30
	17	21
129150-35153	9	31
129150-49811	10	27
	17	25

Parts No. Index

Parts No.	Fig. No.	Ref. No.
129150-59120	13	46
129150-59131	13	45
		49
129150-77511	5	9
	17	16
129155-49801	10	26
129155-51280	12	6
129155-61460	12	25
129211-77920	15	31
129237-59120	13	65
129242-55700	16	15
129242-55720	16	16
129242-55730	16	17
129242-55740	16	18
129242-55750	16	19
129242-55760	16	20
129242-55770	16	21
129242-77010	14	1
129242-77100	14	3
129242-77110	14	4
129242-77120	14	5
129242-77130	14	6
129242-77140	14	7
129242-77150	14	8
129242-77160	14	9
129242-77170	14	10
129242-77180	14	12
129242-77210	14	15
129242-77260	14	19
129242-77270	14	21
129242-77280	14	22
129255-61410	12	22
129268-59551	13	64
129350-49530	10	28
129400-92420	17	28
129403-42380	10	21
129410-03990	5	2
129417-33110	9	26
129417-35150	9	29
129486-01670	3	16
129486-12581	5	8
129486-42050	10	16
	17	23
129486-59581	13	68
129508-33010	9	24
129508-33050	9	25
129508-49030	9	33
129508-49040	9	37
129642-61060	12	87
129698-77020	14	2

Parts No.	Fig. No.	Ref. No.
129698-77190	14	13
129698-77200	14	14
129698-77220	14	16
129698-77230	14	17
129698-77250	14	18
129792-22400	8	22
129795-01780	3	15
129795-01900	15	1
129795-01950	2	8
129795-02412	1	12
129795-21661	8	9
129795-49551	10	29
	17	26
129900-07900	4	1
129940-55601	16	1
129972-77341	15	24
158552-51151	11	11
158552-51571	11	55
		56
158552-51580	11	59
158552-51600	11	69
158552-51670	11	123
158552-51781	11	95
158552-52100	11	125
158552-52311	11	104
158552-52400	11	105
158552-52500	11	126
158552-61441	12	24
158552-61900	12	78
158553-51551	11	121
158553-51630	11	70
158553-51650	11	72
158553-51660	11	73
158553-51670	11	64
158553-51680	11	74
158553-51770	11	101
158553-51930	11	100
	12	66
158553-61050	12	3
158553-61070	12	4
158557-51570	11	57
158563-51281	11	34
		35
158563-51330	11	45
158600-51270	11	33
158601-51550	11	53
158601-51570	11	58
158601-51650	11	122
158601-51770	11	94
158601-51790	11	96

Parts No.	Fig. No.	Ref. No.
171008-03990	9	34
		38
171051-01921	1	8
171056-49120	9	53
171353-44760	10	24
171420-21580	8	12
22190-080002	2	11
	9	48
		50
	17	5
22190-100002	9	51
	17	22
22190-120002	11	98
		106
		128
	12	64
22190-180002	11	99
		107
22190-220002	3	9
	17	8
22217-140000	11	108
22312-050140	11	109
22351-030010	8	7
22351-050010	11	110
22351-060012	4	35
22512-070140	7	7
	8	5
22857-500100	4	49
		50
23061-070230	16	7
23080-015000	9	36
		41
23414-080000	10	17
	17	24
23857-030000	9	49
23876-030000	10	13
24311-000070	11	112
24311-000120	4	52
	17	14
24311-000160	16	22
24311-000320	2	12
	4	53
	17	6
24316-000070	16	11
24316-000160	16	12
24316-240100	9	54
24321-000750	16	23
24326-000750	16	24
24341-000240	2	20
	17	7

Parts No.	Fig. No.	Ref. No.
24356-190180	11	113
24356-190200	11	67
		114
24372-000150	11	68
25132-003900	10	22
26106-060102	11	115
	12	68
26106-060142	10	14
	12	84
		85
26106-060162	2	21
26106-060202	10	15
	12	71
26106-060402	10	25
26106-080122	10	18
26106-080142	7	8
26106-080162	2	13
		14
	3	10
	4	2
	5	6
	9	55
	11	131
26106-080202	5	10
	9	43
	11	132
26106-080222	10	30
26106-080252	4	36
	5	7
26106-080302	2	15
26106-080352	3	17
	9	23
	10	19
26106-080402	7	14
26106-080452	3	11
	4	37
	15	25
26106-080502	4	38
26106-080552	2	16
	10	20
26106-080852	2	17
26116-120202	14	24
26206-100202	3	3
26206-100252	3	4
26306-080002	2	18
	6	6
26306-100002	15	21
26366-060002	9	52
26450-060252	9	15
26450-080452	11	117

Parts No. Index

Parts No.	Fig. No.	Ref. No.
26756-060002	12	69
26776-140002	11	118
27241-120000	1	13
27241-300000	1	14
27241-400000	4	20
27310-070001	4	27
719802-01560	1	1
719803-01500	2	1
719803-22900	8	32
719810-02981	1	29
719810-23100	8	23
719812-92700	17	1
719980-51391	11	1
729008-53100	13	1
977770-1207F	17	29
X2114535200	14	20

Parts No.	Fig. No.	Ref. No.

Parts No.	Fig. No.	Ref. No.

Parts No.	Fig. No.	Ref. No.