YANMAR

PARTS CATALOG

0CW10-M76500EN

Last update Oct., 2019

PREFACE

1. This parts catalog is the 1st edition of 3TNV82A-BDTE for Terberg.

Pub.No. : 0CW10-G76500
Published : October, 2012

2. Model name

Engine model	Vehicle	Vehicle made by
3TNV82A-BDTE	FORKLIFT	Terberg

Directions for the Parts Catalog.

1.This Parts Catalog shows both standard and optional parts.
2.Parts may change without prior notice.
3.The following is an example of the Parts Catalog format.

0CF10-G21601 29. FUEL INJECTION PUMP(W/BOOST)

(A)=4JH-DT
(B)=4JH-DTZ
(C)=4JH-DTZP
(D)=4JH-DTZA
(E)=4JH-DTZY
(F)=

① REF.	② LEV.	PARTS NO.	DESCRIPTION	Q'TY (A)	(B)	(C)	(D)	(E)	(F)	③ I	⑤ R
1	1	729595-51390	FUEL INJECTION PUMP	1	1	1	1	1			1
1-1	1	729595-51391	FUEL INJECTION PUMP	1	1	1	1	1		N	1
	(A=E00185)	(B=E00200)									
3	2	26022-060162	SCREW M 6X 16	9	9	9	9	9			
3-1 ④	2	26022-060162	SCREW M 6X 16	4	4	4	4	4		K	
	(A=E00156)	(B=E00156)	(C=E00156) (D=E00156)	(E=E00156)							
4	2	129470-51040	CAMSHAFT	1	1	1	1	1			
5	2	122710-51050	BEARING, ROLLER	2	2	2	2	2			
6	2	129470-51060	RETAINER	1	1	1	1	1			

Remarks
(1) BOOST COMPEMSATOR TYPE. OPTIONAL
PART, TO E00155,(4JH-DT, 4JH-DTZ

①Ref. No.

The Ref. No. listed may not be in accordance with the illustration Ref. No.

(Ex.) Illustration No. 1 — List Ref No. 1 (Before change) → 1- 1 (After change)

For interchangeable symbols N, R and K, illustrations for new parts may be abbreviated.

②Lev. (Level)

Level indication
The numbers below indicate the level of relativity towards the main part.
1 ----- Main parts (Assembly parts)
2 ----- Sub component included in " 1 ".
3 ----- Sub component included in " 2 ".
Note) Parts that are not for sale are partially illustrated but not listed.

③Interchangeability Symbol

When a part change takes place, one of the following interchangeability symbols is indicated beside the part.

Symbol	Interchangeability	Contents note
N	Old ← Yes / → No New	New Part is interchangeable for Old Part but Old Part is not interchangeable for New Part.
Q	Old ← No / → Yes New	New Part is not interchangeable for Old Part but Old Part is interchangeable for New Part.
R	Old ← Yes / → Yes New	New/ Old Parts are both interchangeable.
S	Old ← No / → No New	New/ Old Parts are both not interchangeable.
W		Part newly added.
Z		Part discontinued.
F		Not interchangeable by a single part but interchangeable together with related parts.
K		Changes only for used parts quantities.

④Effective Machine No.

When a part changes, the effective Machine No. will be indicated in the (A)-(F) column.

Product Symbol	Product No.	Product Symbol	Product No.
C	Clutch No. Compressor No.	F	Machine No. (Agricultural Equip.)
D	Drive No.	M	Machine No.
E	Engine No.		

Note 1) A date may follow the symbol. (Ex.) 1996.01
Note 2) " XXXXX " and " ZZZZZ " are for parts that could not be predicted or for engine models that could not be identified.
Note 3) (A=E00185) is the E (Engine Serial Number) for the column (A) model (in this case 4JH-DT) after the parts design change.

⑤Remarks

Figures or alphabets (symbols) are entered in the remarks column.
The comments (remarks) on parts that are indicated at the bottom of the illustration are the same symbols as those stated above.

Contents

0CW10-M76500

Fig. No.	Fig. Name
3TNV82A-BDTE	
1.	CYLINDER BLOCK
2.	GEAR HOUSING
3.	FLYWHEEL HOUSING & OIL SUMP
4.	CYLINDER HEAD & BONNET
5.	SUCTION MANIFOLD & AIR CLEANER
6.	EXHAUST MANIFOLD
7.	CAMSHAFT & DRIVING GEAR
8.	CRANKSHAFT & PISTON
9.	LUB.OIL SYSTEM
10.	COOLING WATER SYSTEM
11.	FUEL INJECTION PUMP
12.	GOVERNOR
13.	FUEL INJECTION VALVE
14.	FUEL LINE
15.	STARTING MOTOR
16.	GENERATOR
17.	GASKET SET

Fig. No.	Fig. Name

Fig.1. CYLINDER BLOCK

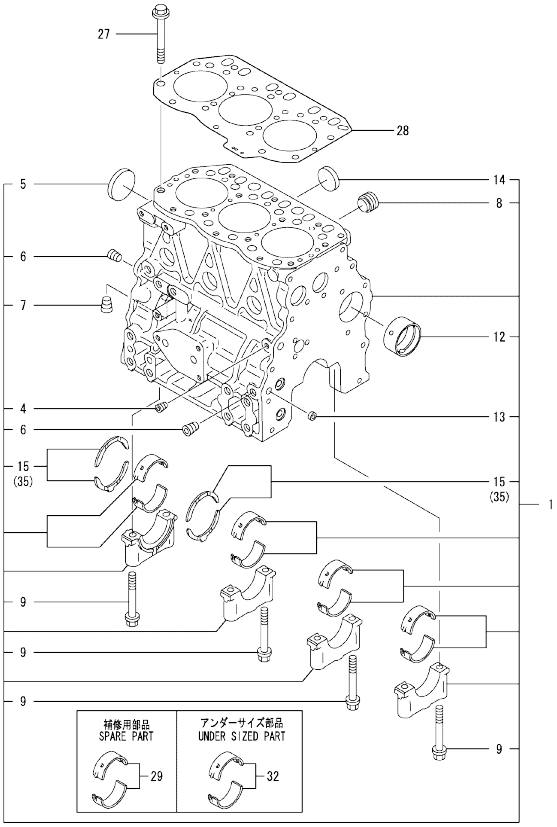

Remarks
(1)Spare part.
(2)Under-sized(U.S.=0.25)part.
(3)Over-sized(O.S.=0.25)part.

(A)=3TNV82A-BDTE (D)=
(B)= (E)=
(C)= (F)=

No.	Lev.	Parts No.	Description	Q'ty (A)	(B)	(C)	(D)	(E)	(F)	I	R
1	1	719802-01560	BLOCK ASSY, CYLINDER	1							
4	2	124060-01050	PLUG, PT1/8	1							
5	2	129001-01250	PLUG, 50	1							
6	2	124160-01910	PLUG, PT1/4	2							
7	2	124160-01910	PLUG, PT1/4	1							
8	2	171051-01921	PLUG, NPTF1	1							
9	2	119620-02020	BOLT, METAL CAP	8							
12	2	129795-02412	BUSH, CAMSHAFT	1							
13	2	27241-120000	PLUG, 12	2							
14	2	27241-300000	PLUG 30	6							
15	2	119717-02930	BEARING, THRUST	2							
27	1	119810-01200	BOLT, HEAD	14							
28	1	119812-01330	GASKET, HEAD	1							
29	1	719810-02981	BEARING, MAIN	4							1
32	1	119810-02871	BEARING, 0.25 US	4							2
35	1	119810-02941	BEARING, THRUST 0.25	2							3

N:Old ←Yes/No→ New. Q:Old ←No/Yes→ New. R:Old ←Yes/Yes→ New. S:Old ←No/No→ New. W:Add. Z:Discontinued. F:Interchangeable by set. K:Q'ty Change

Copyright (C) YANMAR CO., LTD. All RightsReserved.

Fig.2. GEAR HOUSING

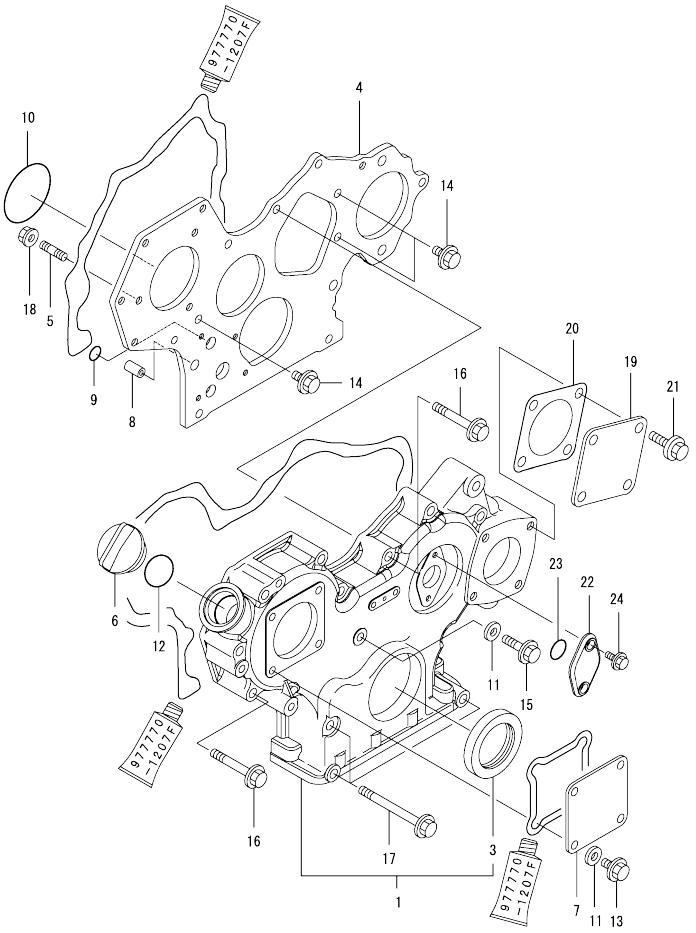

(A)=3TNV82A-BDTE (D)=
(B)= (E)=
(C)= (F)=

No.	Lev.	Parts No.	Description	Q'ty (A)	(B)	(C)	(D)	(E)	(F)	I	R
1	1	729652-01500	CASE ASSY, GEAR	1							
3	2	119934-01800	SEAL, OIL	1							
4	1	129604-01520	FLANGE, GEAR CASE	1							
5	1	119802-01561	STUD, M8X25	3							
6	1	124160-01751	COVER, FILLER	1							
7	1	124240-01871	COVER	1							
8	1	129795-01950	PIPE, KNOCK L=18	2							
9	1	119609-32040	O-RING, P16	2							
10	1	121850-51960	O-RING	1							
11	1	22190-080002	WASHER, SEAL 6	5							
12	1	24311-000320	O-RING, 1AP32.0	1							
13	1	26106-080162	BOLT, M8X 16 PLATED	4							
14	1	26106-080162	BOLT, M8X 16 PLATED	3							
15	1	26106-080302	BOLT, M8X 30 PLATED	1							
16	1	26106-080552	BOLT, M8X 55 PLATED	10							
17	1	26106-080852	BOLT, M8X 85 PLATED	3							
18	1	26306-080002	NUT, M8	3							
19	1	124240-01871	COVER	1							
20	1	129C26-01890	GASKET, HO-P	1							
21	1	26106-080162	BOLT, M8X 16 PLATED	4							
22	1	121023-01551	COVER	1							
23	1	24341-000240	O-RING, 1AS24.0	1							
24	1	26106-060162	BOLT, M6X 16 PLATED	2							

N:Old ◄Yes/No► New. Q:Old ◄No/Yes► New. R:Old ◄Yes/Yes► New. S:Old ◄No/No► New. W:Add. Z:Discontinued. F:Interchangeable by set. K:Q'ty Change

Copyright (C) YANMAR CO., LTD. All RightsReserved.

Fig.3. FLYWHEEL HOUSING & OIL SUMP

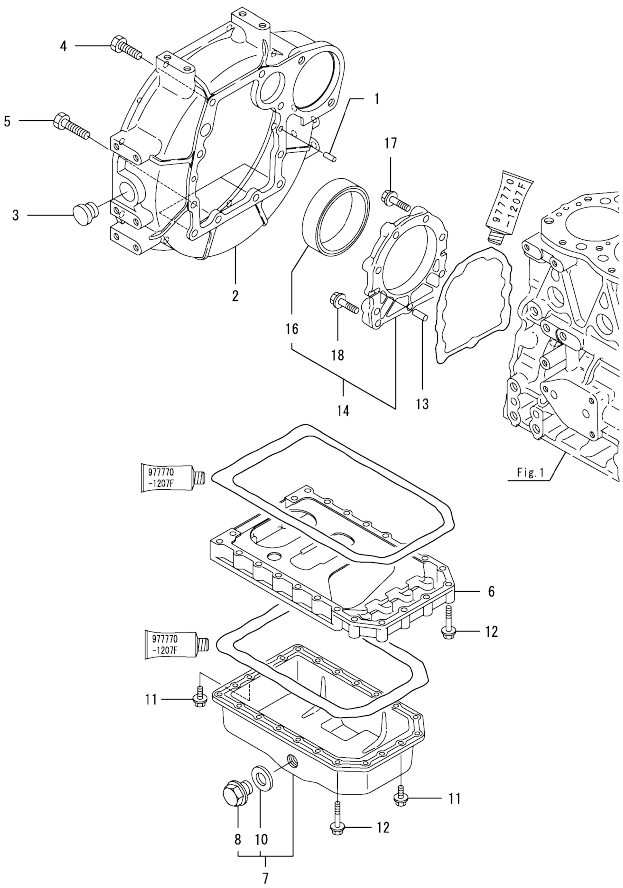

(A)=3TNV82A-BDTE (D)=
(B)= (E)=
(C)= (F)=

No.	Lev.	Parts No.	Description	Q'ty (A)	(B)	(C)	(D)	(E)	(F)	I	R
1	1	129100-01580	PIN, M8X16	2							
2	1	129612-01600	HOUSING, FLYWHEEL	1							
3	1	119620-01750	CAP	1							
4	1	26206-100252	BOLT, M10X 25 PLATED	6							
5	1	26206-100302	BOLT, M10X 30 PLATED	4							
6	1	119810-01730	SPACER, OIL SUMP	1							
7	1	119843-01780	SUMP ASSY, OIL	1							
8	2	119640-01640	PLUG, DRAIN M22	1							
10	2	22190-220002	WASHER, SEAL 22	1							
11	1	26106-080162	BOLT, M8X 16 PLATED	6							
12	1	26106-080452	BOLT, M8X 45 PLATED	22							
13	1	129100-01580	PIN, M8X16	2							
14	1	129100-01640	CASE ASSY, OIL SEAL	1							
16	2	129795-01780	SEAL, OIL	1							
17	1	129486-01670	BOLT, M8X30	6							
18	1	26106-080352	BOLT, M8X 35 PLATED	3							

N:Old ←Yes/No→ New. Q:Old ←No/Yes→ New. R:Old ←Yes/Yes→ New. S:Old ←No/No→ New. W:Add. Z:Discontinued. F:Interchangeable by set. K:Q'ty Change

Copyright (C) YANMAR CO., LTD. All RightsReserved.

Fig.4. CYLINDER HEAD & BONNET

(A)=3TNV82A-BDTE
(B)=
(C)=
(D)=
(E)=
(F)=

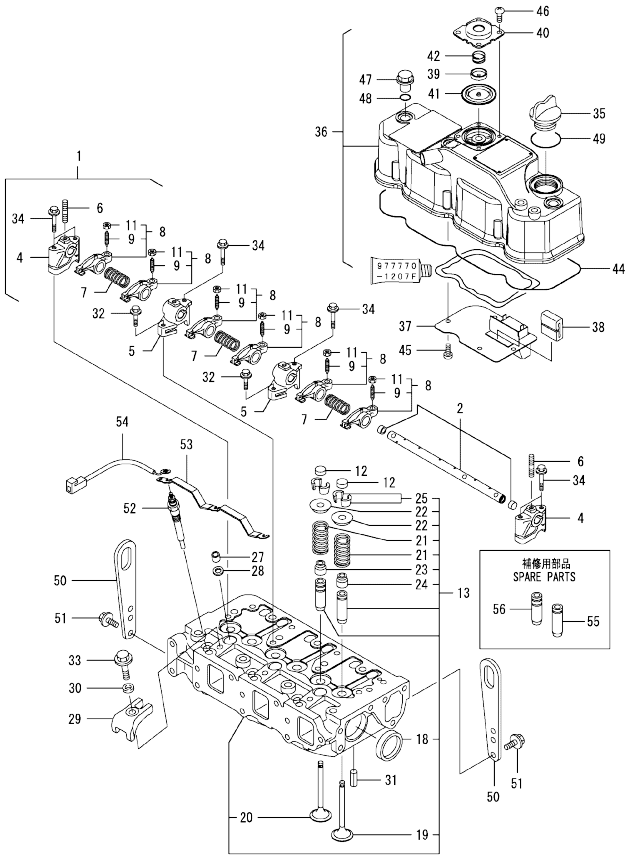

No.	Lev.	Parts No.	Description	Q'ty (A)	(B)	(C)	(D)	(E)	(F)	I	R
1	1	119802-11241	SHAFT ASSY, ROCKER	1							
2	2	119802-11251	SHAFT, ROCKER ARM	1							
4	2	119802-11260	SUPPORT, ROCKER ARM	2							
5	2	119802-11270	SUPPORT, ROCKER ARM	2							
6	2	119802-11280	STUD	3							
7	2	129150-11280	SPRING	3							
8	2	119802-11650	ARM, ROCKER	6							
9	3	129150-11230	SCREW, VALVE ADJUST	6							
11	3	129150-11750	NUT, M8	6							
12	1	104211-11370	CAP, VALVE	6							
13	1	119803-11700	HEAD ASSY, CYLINDER	1							
18	2	27241-400000	PLUG, 40	2							
19	2	119802-11100	VALVE, INTAKE	3							
20	2	119802-11110	VALVE, EXHAUST	3							
21	2	119810-11120	SPRING, VALVE	6							
22	2	104211-11180	RETAINER, SPRING	6							
23	2	119803-11340	SEAL, VALVE STEM	3							
24	2	124160-11340	SEAL, VALVE STEM	3							
25	2	27310-070001	COTTER, 7	6							
27	1	119802-11870	PROTECTOR, NOZZLE	3							
28	1	119625-11880	SEAT, NOZZLE	3							
29	1	119802-11900	RETAINER, NOZZLE	3							
30	1	120270-54410	WASHER, INJECTOR	3							
31	1	22351-060012	PIN, SPRING 6.0X12	2							
32	1	26106-080252	BOLT, M8X 25 PLATED	2							
33	1	26106-080452	BOLT, M8X 45 PLATED	3							
34	1	26106-080502	BOLT, M8X 50 PLATED	6							
35	1	124160-01751	COVER, FILLER	1							
36	1	119802-11350	BONNET ASSY, HEAD	1							
37	2	119802-03010	PLATE	1							
38	2	129150-03070	BAFFLE, BREATHER	1							
39	2	119802-03110	PLATE	1							
40	2	119802-03121	COVER, DIAPHRAGM	1							
41	2	119802-03130	DIAPHRAGM	1							
42	2	119802-03141	SPRING, DIAPHRAGM	1							
44	2	119802-11310	GASKET, BONNET	1							
45	2	22857-500100	SCREW, 5X10	4							
46	2	22857-500100	SCREW, 5X10	4							
47	1	124160-11360	KNOB	3							
48	1	24311-000120	O-RING, 1AP12.0	3							
49	1	24311-000320	O-RING, 1AP32.0	1							
50	1	129900-07900	LIFTER	2							
51	1	26106-080162	BOLT, M8X 16 PLATED	4							
52	1	129008-77800	PLUG, GLOW	3							
53	1	119803-77821	CONNECTOR, GLOW PLUG	1							
54	1	119803-77830	HARNESS, WIRE	1							
55	1	124060-11800	GUIDE, VALVE	3						1	
56	1	119802-11810	GUIDE, VALVE	3						1	

Remarks
(1)Spare part.

N:Old $\xleftarrow[\text{No}]{\text{Yes}}$ New. Q:Old $\xleftarrow[\text{Yes}]{\text{No}}$ New. R:Old $\xleftarrow[\text{Yes}]{\text{Yes}}$ New. S:Old $\xleftarrow[\text{No}]{\text{No}}$ New. W:Add. Z:Discontinued. F:Interchangeable by set. K:Q'ty Change

Copyright (C) YANMAR CO., LTD. All RightsReserved.

Fig.5. SUCTION MANIFOLD & AIR CLEANER

(A)=3TNV82A-BDTE
(B)=
(C)=
(D)=
(E)=
(F)=

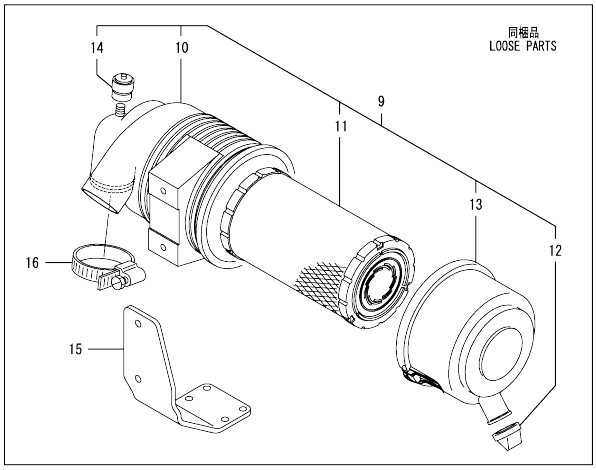

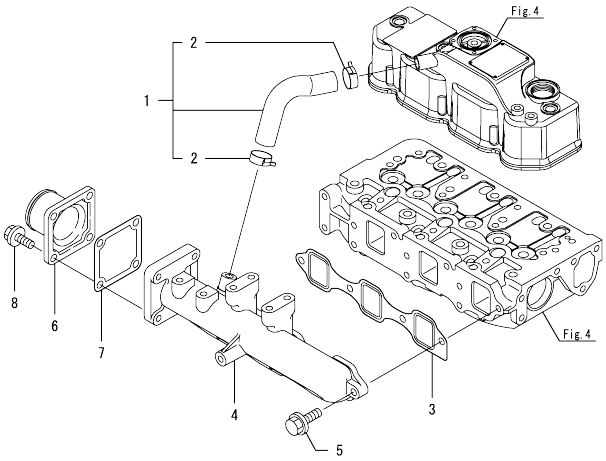

No.	Lev.	Parts No.	Description	Q'ty (A)	(B)	(C)	(D)	(E)	(F)	I	R
1	1	119802-03090	PIPE , BREATHER	1							
2	2	129410-03990	CLIP	2							
3	1	119810-12112	GASKET, MANIFOLD	1							
4	1	119802-12130	MANIFOLD, AIR INTAKE	1							
5	1	26106-080252	BOLT, M8X 25 PLATED	4							
6	1	129486-12581	JOINT, MANIFOLD	1							
7	1	129150-77511	GASKET	1							
8	1	26106-080202	BOLT, M8X 20 PLATED	4							
9	1	129209-12500	CLEANER ASSY, AIR	1							
10	2	129209-12510	BODY, AIR CLEANER	1							
11	2	119808-12520	ELEMENT	1							
12	2	119808-12540	VALVE, UNLOADER	1							
13	2	129209-12540	COVER ASSY	1							
14	2	126650-12680	INDICATOR	1							
15	1	119802-12560	BRACKET, AIR CLEANER	1							
16	1	23000-060000	CLAMP, 60	2							

N:Old ←Yes/No→ New. Q:Old ←No/Yes→ New. R:Old ←Yes/Yes→ New. S:Old ←No/No→ New. W:Add. Z:Discontinued. F:Interchangeable by set. K:Q'ty Change

Copyright (C) YANMAR CO., LTD. All RightsReserved.

Fig.6. EXHAUST MANIFOLD

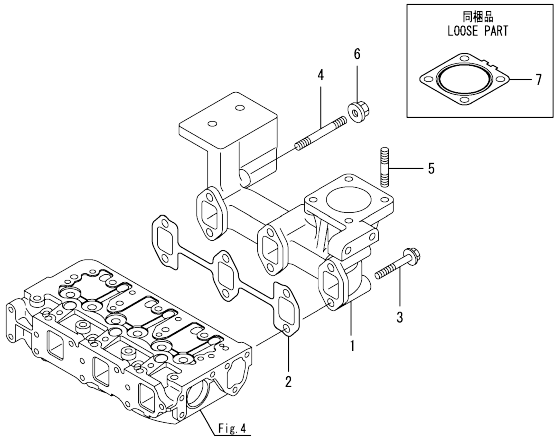

(A)=3TNV82A-BDTE
(B)=
(C)=
(D)=
(E)=
(F)=

No.	Lev.	Parts No.	Description	Q'ty (A)	(B)	(C)	(D)	(E)	(F)	I	R
1	1	119802-13109	MANIFOLD, EXHAUST	1							
2	1	119810-13110	GASKET	1							
3	1	119802-13640	BOLT, M8X60 10.9T	4							
4	1	119802-13740	STUD, M8X60	2							
5	1	119131-18320	STUD, M8X22	4							
6	1	26306-080002	NUT, M8	2							
7	1	129004-13200	GASKET, SILENCER	1							

N:Old ←Yes/No→ New. Q:Old ←No/Yes→ New. R:Old ←Yes/Yes→ New. S:Old ←No/No→ New. W:Add. Z:Discontinued. F:Interchangeable by set. K:Q'ty Change

Copyright (C) YANMAR CO., LTD. All RightsReserved.

Fig.7. CAMSHAFT & DRIVING GEAR

(A)=3TNV82A-BDTE
(B)=
(C)=
(D)=
(E)=
(F)=

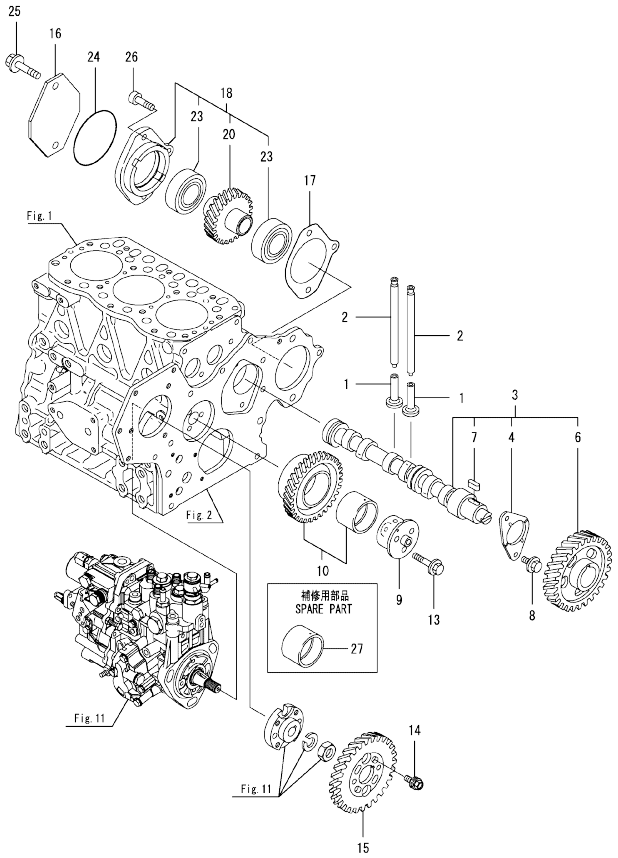

No.	Lev.	Parts No.	Description	Q'ty (A)	(B)	(C)	(D)	(E)	(F)	I	R
1	1	129150-14200	TAPPET	6							
2	1	119810-14400	ROD, PUSH	6							
3	1	119802-14580	CAMSHAFT ASSY	1							
4	2	129150-02450	BEARING, THRUST	1							
6	2	129150-14101	GEAR, CAMSHAFT	1							
7	2	22512-070140	KEY, 7X 14	1							
8	1	26106-080142	BOLT, M8X 14 PLATED	2							
9	1	119803-25050	SHAFT, IDLE	1							
10	1	119802-25101	GEAR ASSY, IDLE	1							
13	1	26106-080402	BOLT, M8X 40 PLATED	3							
14	1	129150-25301	BOLT	4							
15	1	119802-25901	GEAR, PUMP	1							
16	1	121023-26071	COVER	1							
17	1	171353-26081	GASKET	1							
18	1	129484-26200	DRIVE ASSY, PUMP	1							
20	2	129484-26210	GEAR ASSY	1							
23	2	24105-060064	BEARING, BALL 6006Z	2							
24	1	24321-000850	O-RING, 1AG85.0	1							
25	1	26106-100452	BOLT, M10X 45 PLATED	2							
26	1	26450-080282	BOLT, M8X 28	1							
27	1	119802-25071	BUSH, IDLE GEAR	1							1

Remarks
(1)Spare part.

N:Old ←Yes/No→ New. Q:Old ←No/Yes→ New. R:Old ←Yes/Yes→ New. S:Old ←No/No→ New. W:Add. Z:Discontinued. F:Interchangeable by set. K:Q'ty Change

Copyright (C) YANMAR CO., LTD. All RightsReserved.

Fig.8. CRANKSHAFT & PISTON

(A)=3TNV82A-BDTE
(B)=
(C)=
(D)=
(E)=
(F)=

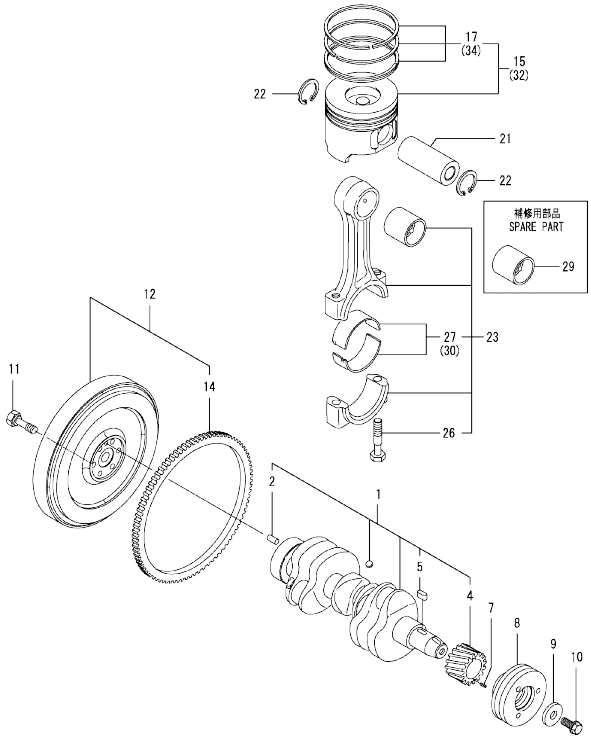

No.	Lev.	Parts No.	Description	Q'ty (A)	(B)	(C)	(D)	(E)	(F)	I	R
1	1	119803-21000	CRANKSHAFT ASSY	1							
2	2	129100-01580	PIN, M8X16	1							
4	2	119803-21200	GEAR, CRANKSHAFT	1							
5	2	22512-070140	KEY, 7X 14	1							
7	1	22351-030010	PIN, SPRING 3.0X10	1							
8	1	119802-21650	V-PULLEY, 110	1							
9	1	129795-21661	WASHER	1							
10	1	121850-21680	BOLT	1							
11	1	121111-21501	BOLT, FLYWHEEL	6							
12	1	171420-21580	FLYWHEEL ASSY	1							
14	2	119865-21600	GEAR, RING	1							
15	1	119803-22080	PISTON ASSY	3							
17	2	119802-22500	RING SET, PISTON	3							
21	1	119813-22300	PIN, PISTON	3							
22	1	129792-22400	CIRCLIP, 23	6							
23	1	719810-23100	ROD ASSY, CONNECTING	3							
26	2	119810-23200	BOLT, CONNECTING ROD	6							
27	2	119810-23601	BEARING, CRANK PIN	3							
29	1	119810-23910	BEARING, PISTON PIN	3							1
30	1	119810-23611	BEARING, 0.25 US	3							2
32	1	719803-22900	PISTON ASSY, 0.25 OS	3							3
34	2	119802-22950	RING SET, 0.25 OS	3							3

Remarks
(1)Spare part.
(2)Under-sized(U.S.=0.25)part.
(3)Over-sized(O.S.=0.25)part.

N:Old ◄Yes/No► New. Q:Old ◄No/Yes► New. R:Old ◄Yes/Yes► New. S:Old ◄No/No► New. W:Add. Z:Discontinued. F:Interchangeable by set. K:Q'ty Change

Copyright (C) YANMAR CO., LTD. All RightsReserved.

Fig.9. LUB.OIL SYSTEM

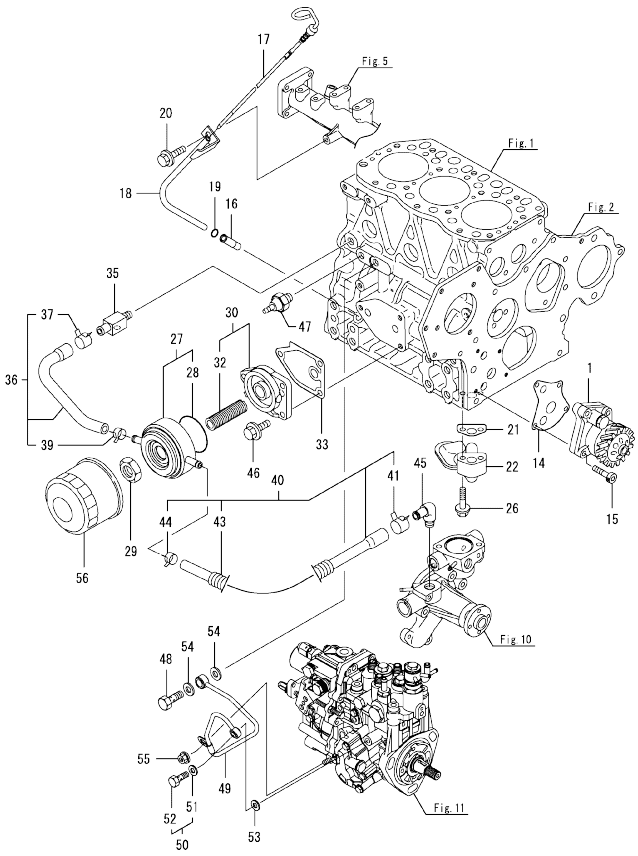

(A)=3TNV82A-BDTE (D)=
(B)= (E)=
(C)= (F)=

No.	Lev.	Parts No.	Description	Q'ty (A)	(B)	(C)	(D)	(E)	(F)	I	R
1	1	129001-32001	PUMP ASSY, OIL	1							
14	1	129150-32020	GASKET, PUMP	1							
15	1	26450-060252	BOLT, M6X 25	4							
16	1	119260-34810	GUIDE, DIPSTICK	1							
17	1	119802-34831	DIPSTICK, OIL	1							
18	1	119802-34850	GUIDE, DIPSTICK	1							
19	1	24316-240100	O-RING, 4DP10A	1							
20	1	26106-080162	BOLT, M8X 16 PLATED	1							
21	1	129150-35042	GASKET	1							
22	1	119810-35401	PIPE ASSY, OIL INLET	1							
26	1	26106-080352	BOLT, M8X 35 PLATED	2							
27	1	129508-33010	COOLER ASSY, OIL	1							
28	2	129508-33050	O-RING	1							
29	1	129417-33111	NUT, OIL COOLER	1							
30	1	129006-35100	BRACKET ASSY, FILTER	1							
32	2	129417-35150	STUD, L=67	1							
33	1	129150-35111	GASKET	1							
35	1	129006-44480	JOINT	1							
36	1	129508-49030	PIPE ASSY, WATER	1							
37	2	171008-03990	CLIP, HOSE 18.5	1							
39	2	23080-015000	CLAMP, 15	1							
40	1	129508-49040	PIPE ASSY, WATER	1							
41	2	171008-03990	CLIP, HOSE 18.5	1							
43	2	119940-59130	TUBE, CORRUGATED	1							
44	2	23080-015000	CLAMP, 15	1							
45	1	119944-49300	ELBOW, PT3/8	1							
46	1	26106-080202	BOLT, M8X 20 PLATED	3							
47	1	114250-39450	SWITCH, 0.5KG	1							
48	1	124160-39140	BOLT, PIPE JOINT M10	1							
49	1	119802-39450	PIPE ASSY, OIL	1							
50	1	129005-59830	BOLT ASSY, JOINT M8	1							
51	2	22190-080002	WASHER, SEAL 6	1							
52	2	23857-030000	BOLT, JOINT 3	1							
53	1	22190-080002	WASHER, SEAL 6	1							
54	1	22190-100002	WASHER, SEAL 10	2							
55	1	26366-060002	NUT, M6	1							
56	1	129150-35153	FILTER	1							1

Remarks
(1)Spare part.

N:Old ←Yes/No→ New. Q:Old ←No/Yes→ New. R:Old ←Yes/Yes→ New. S:Old ←No/No→ New. W:Add. Z:Discontinued. F:Interchangeable by set. K:Q'ty Change

Copyright (C) YANMAR CO., LTD. All RightsReserved.

Fig.10. COOLING WATER SYSTEM

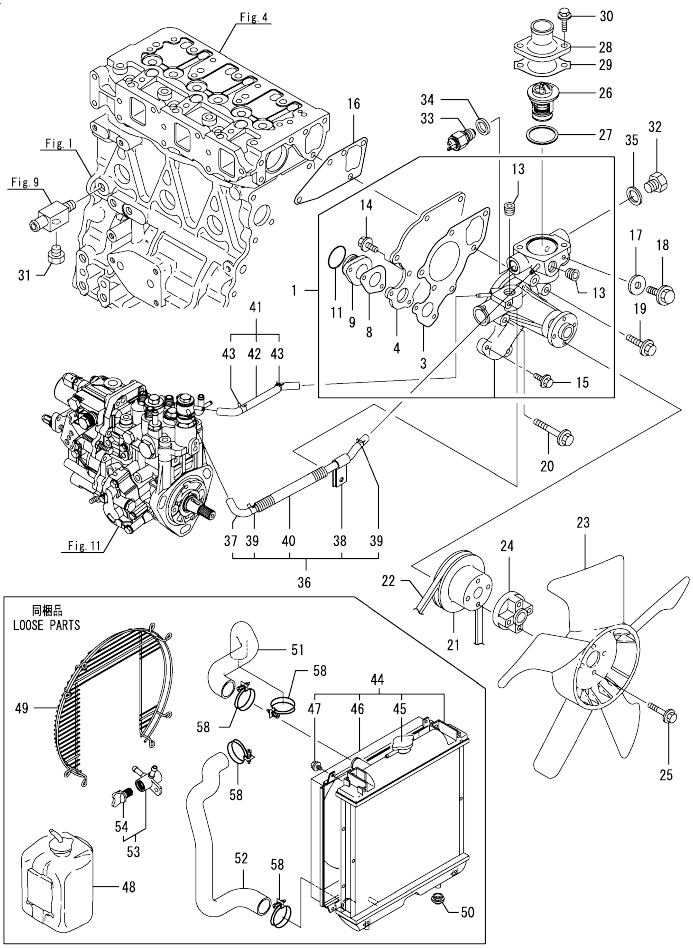

(A)=3TNV82A-BDTE
(B)=
(C)=
(D)=
(E)=
(F)=

No.	Lev.	Parts No.	Description	Q'ty (A)	(B)	(C)	(D)	(E)	(F)	I	R
1	1	119802-42001	PUMP ASSY, WATER	1							
3	2	119810-42051	GASKET, WATER PUMP	1							
4	2	119810-42120	PLATE	1							
8	2	119810-42281	GASKET, WATER PUMP	1							
9	2	119810-42290	PIPE	1							
11	2	129054-42320	O-RING	1							
13	2	23876-030000	PLUG, R03	2							
14	2	26106-060142	BOLT, M6X 14 PLATED	2							
15	2	26106-060202	BOLT, M6X 20 PLATED	2							
16	1	129486-42050	GASKET, WATER PUMP	1							
17	1	23414-080000	GASKET, 8X1.0	1							
18	1	26106-080122	BOLT, M8X 12 PLATED	1							
19	1	26106-080352	BOLT, M8X 35 PLATED	1							
20	1	26106-080552	BOLT, M8X 55 PLATED	3							
21	1	129403-42380	V-PULLEY, D=110	1							
22	1	25132-003700	V-BELT, A37	1							
23	1	129335-44740	FAN, COOLING D335	1							
24	1	121267-44760	SPACER	1							
25	1	26106-060302	BOLT, M6X 30 PLATED	4							
26	1	129155-49801	THERMOSTAT, 71	1							
27	1	129150-49811	GASKET, THERMOSTAT	1							
28	1	129350-49530	COVER, THERMOSTAT	1							
29	1	129795-49551	GASKET	1							
30	1	26106-080222	BOLT, M8X 22 PLATED	2							
31	1	171056-49120	PLUG, DRAIN	1							
32	1	121450-42450	PLUG, M16	1							
33	1	121250-44901	SWITCH, 110	1							
34	1	124465-44950	GASKET, 16	1							
35	1	124465-44950	GASKET, 16	1							
36	1	119802-49610	PIPE ASSY, WATER	1							
37	2	119802-49711	PIPE ASSY, WATER	1							
38	2	119802-49730	RETAINER, PIPE	1							
39	2	124722-59050	CLIP, HOSE 9	2							
40	2	119802-59320	TUBE, CORRUGATED	1							
41	1	119802-49620	PIPE ASSY, WATER	1							
42	2	119802-49721	PIPE ASSY, WATER	1							
43	2	124722-59050	CLIP, HOSE 9	2							
44	1	129004-44500	RADIATOR ASSY	1							
45	2	129107-44590	CAP, RADIATOR	1							
46	2	119802-44600	SHROUD	1							
47	2	26014-060122	BOLT, M6X 12	4							
48	1	120445-44530	TANK, SUB	1							
49	1	119802-44570	GUARD	1							
50	1	119255-44660	ABSORBER	2							
51	1	129004-49010	PIPE, WATER	1							
52	1	129004-49020	PIPE, WATER	1							
53	1	129150-49100	COCK ASSY, 3-WAY	1							
54	2	129150-49080	COCK, DRAIN	1							
58	1	23010-038000	CLAMP, 38	4							

N:Old ◄Yes/No► New. Q:Old ◄No/Yes► New. R:Old ◄Yes/Yes► New. S:Old ◄No/No► New. W:Add. Z:Discontinued. F:Interchangeable by set. K:Q'ty Change

Copyright (C) YANMAR CO., LTD. All RightsReserved.

Fig.11. FUEL INJECTION PUMP

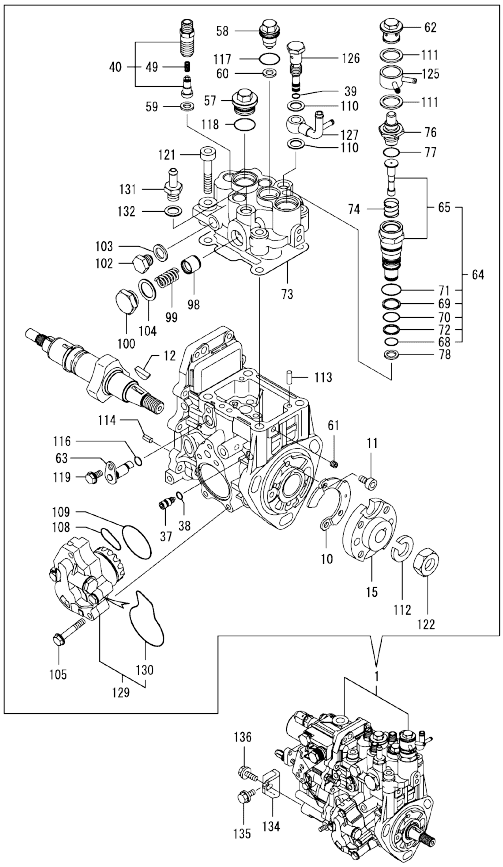

Remarks
(1)Governor(Fig.12)is incorporated in
this Fuel Injection Pump (Ref.1).

(A)=3TNV82A-BDTE
(B)=
(C)=
(D)=
(E)=
(F)=

No.	Lev.	Parts No.	Description	Q'ty (A)	(B)	(C)	(D)	(E)	(F)	I	R
1	1	719933-51301	PUMP ASSY, INJECTION	1							1
10	2	129008-51900	COVER, GEAR CASE	1							
11	2	129008-51920	BOLT, M6X10	2							
12	2	119802-51090	KEY, 4X16	1							
15	2	158552-51151	FLANGE	1							
37	2	158600-51270	STOPPER, TAPPET	1							
38	2	158563-51281	O-RING, 4D S6	1							
39	2	158563-51281	O-RING, 4D S6	1							
40	2	129008-51390	VALVE ASSY, DELIVERY	3							
49	3	158563-51330	SPRING, DELIVERY	3							
57	2	158601-51550	PLUG	1							
58	2	119802-51560	PLUG, BARREL	1							
59	2	158552-51571	GASKET	3							
60	2	158552-51571	GASKET	1							
61	2	158557-51570	PLUG	1							
62	2	158601-51570	PLUG	1							
63	2	158552-51580	LIFTER	1							
64	2	119802-51590	TIMER SET	1							
65	3	119802-51600	TIMER ASSY	1							
68	3	158553-51670	O-RING, 1011	1							
69	3	119802-51680	RING, BACK UP	1							
70	3	119802-51690	O-RING	1							
71	3	24356-190200	O-RING, 4D19020	1							
72	3	24372-000150	RING, BACK UP T2P15	1							
73	2	158552-51600	GASKET	1							
74	2	158553-51630	SPRING, TIMER	1							
76	2	158553-51650	ELEMENT	1							
77	2	158553-51660	O-RING, P14	1							
78	2	158553-51680	GASKET	1							
98	2	158601-51770	PISTON	1							
99	2	158552-51781	SPRING	1							
100	2	158601-51790	PLUG	1							
102	2	158553-51930	PLUG, M12	1							
103	2	22190-120002	WASHER, SEAL 12	1							
104	2	22190-180002	WASHER, SEAL 18	1							
105	2	158553-51770	BOLT	4							
108	2	158552-52311	O-RING	1							
109	2	158552-52400	O-RING, 4E S42	1							
110	2	22190-120002	WASHER, SEAL 12	2							
111	2	22190-180002	WASHER, SEAL 18	2							
112	2	22217-140000	WASHER, SPRING 14	1							
113	2	22312-050140	PIN, PARALLEL M5X14	2							
114	2	22351-050010	PIN, SPRING 5.0X10	2							
116	2	24311-000070	O-RING, 1AP7.0	1							
117	2	24356-190180	O-RING, 4D19018	1							
118	2	24356-190200	O-RING, 4D19020	1							
119	2	26106-060102	BOLT, M6X 10 PLATED	1							
121	2	26450-080452	BOLT, M8X 45	4							
122	2	26776-140002	NUT, LOCK M14	1							
125	2	158553-51551	JOINT	1							
126	2	158601-51650	JOINT, OVER FLOW	1							

N:Old ←Yes/No→ New. Q:Old ←No/Yes→ New. R:Old ←Yes/Yes→ New. S:Old ←No/No→ New. W:Add. Z:Discontinued. F:Interchangeable by set. K:Q'ty Change

++ CONTINUE ++

Copyright (C) YANMAR CO., LTD. All RightsReserved.

Fig.11. FUEL INJECTION PUMP

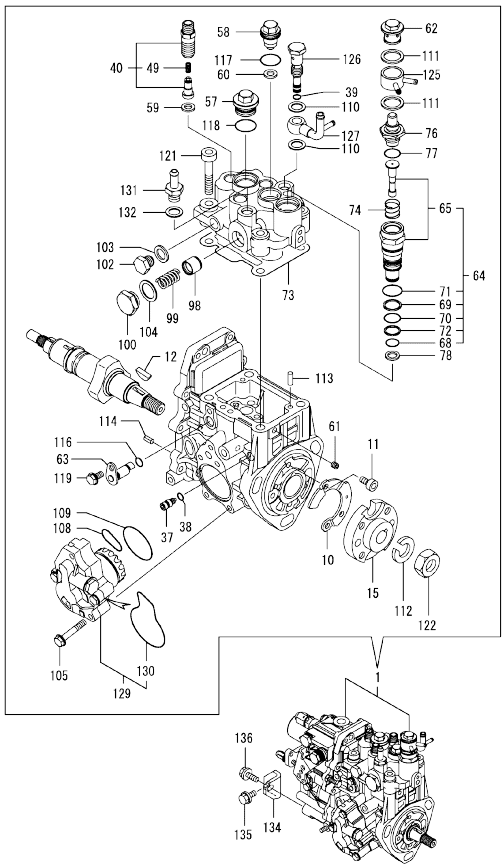

Remarks
(1)Governor(Fig.12)is incorporated in
this Fuel Injection Pump (Ref.1).

(A)=3TNV82A-BDTE (D)=
(B)= (E)=
(C)= (F)=

No.	Lev.	Parts No.	Description	Q'ty (A)	(B)	(C)	(D)	(E)	(F)	I	R
127	2	158552-51670	JOINT, OVER FLOW	1							
129	2	158552-52100	PUMP ASSY, FUEL FEED	1							
130	3	158552-52500	O-RING	1							
131	2	119934-59910	JOINT, PIPE	1							
132	2	22190-120002	WASHER, SEAL 12	1							
134	1	119802-51250	RETAINER, PUMP	1							
135	1	26106-080162	BOLT, M8X 16 PLATED	1							
136	1	26106-080202	BOLT, M8X 20 PLATED	1							

N:Old ←Yes/No→ New. Q:Old ←No/Yes→ New. R:Old ←Yes/Yes→ New. S:Old ←No/No→ New. W:Add. Z:Discontinued. F:Interchangeable by set. K:Q'ty Change

Copyright (C) YANMAR CO., LTD. All RightsReserved.

Fig.12. GOVERNOR

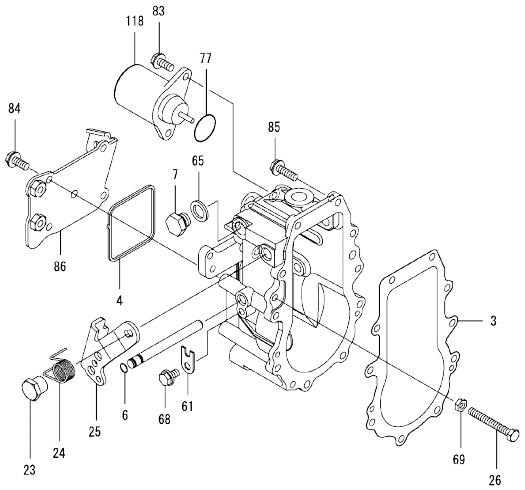

Remarks
*This figure(Governor)is incorporated
in the Fuel Injection Pump (Fig.11).

(A)=3TNV82A-BDTE (D)=
(B)= (E)=
(C)= (F)=

No.	Lev.	Parts No.	Description	Q'ty (A)	(B)	(C)	(D)	(E)	(F)	I	R
3	2	158553-61050	GASKET	1							
4	2	158553-61070	GASKET	1							
6	2	129155-51280	O-RING, S6	1							
7	2	158553-51930	PLUG, M12	1							
23	2	129255-61410	NUT, LOCK	1							
24	2	119807-61420	SPRING, RETURN	1							
25	2	158552-61441	LEVER, REGULATOR	1							
26	2	129155-61460	BOLT, IDLE	1							
61	2	119660-61901	RETAINER, SHAFT	1							
65	2	22190-120002	WASHER, SEAL 12	1							
68	2	26106-060102	BOLT, M6X 10 PLATED	1							
69	2	26756-060002	NUT, LOCK M6	1							
77	2	158552-61900	O-RING	1							
83	2	26106-060142	BOLT, M6X 14 PLATED	2							
84	2	26106-060142	BOLT, M6X 14 PLATED	4							
85	2	26106-060202	BOLT, M6X 20 PLATED	10							
86	2	158552-61061	COVER, GOVERNOR CASE	1							
118	2	119653-77950	SOLENOID, STOP	1							

N:Old ◄Yes/No► New. Q:Old ◄No/Yes► New, R:Old ◄Yes/Yes► New, S:Old ◄No/No► New, W:Add, Z:Discontinued, F:Interchangeable by set, K:Q'ty Change

Copyright (C) YANMAR CO., LTD. All RightsReserved.

Fig.13. FUEL INJECTION VALVE

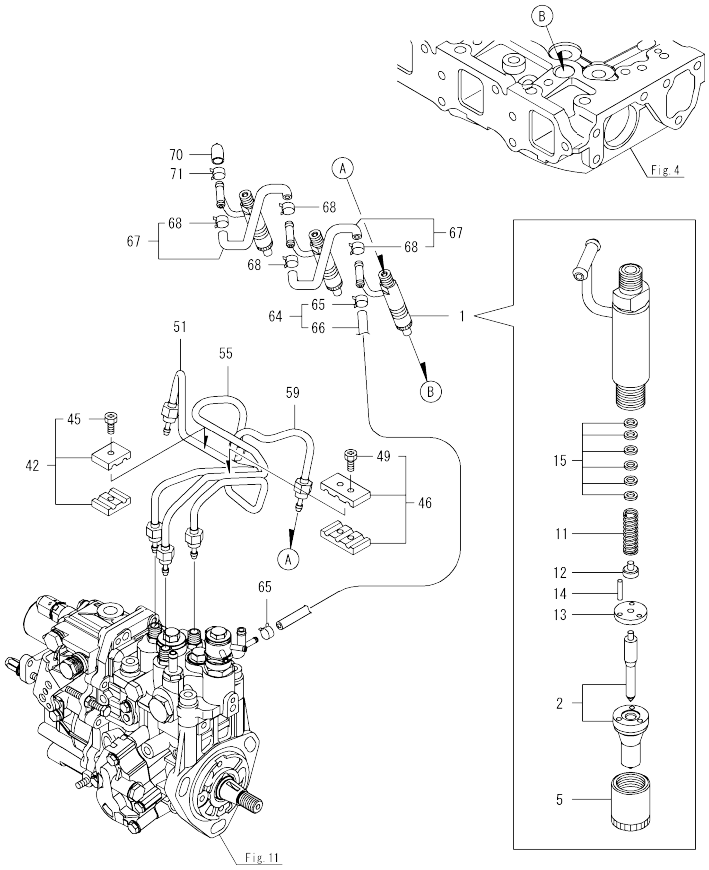

(A)=3TNV82A-BDTE (D)=
(B)= (E)=
(C)= (F)=

No.	Lev.	Parts No.	Description	Q'ty (A)	(B)	(C)	(D)	(E)	(F)	I	R
1	1	729008-53100	VALVE ASSY,INJECTION	3							
2	2	129008-53000	VALVE ASSY,INJECTION	3							
5	2	114250-53080	NUT, NOZZLE D16.95	3							
11	2	114250-53120	SPRING, NOZZLE	3							
12	2	114250-53130	SEAT, SPRING	3							
13	2	114250-53140	PLATE	3							
14	2	114250-53210	PIN	6							
15	2	119803-53400	SHIM SET	3							
42	1	119305-59120	RETAINER, PIPE	1							
45	2	129150-59131	BOLT, M4X14	1							
46	1	129150-59120	RETAINER, PIPE	1							
49	2	129150-59131	BOLT, M4X14	2							
51	1	119802-59960	PIPE ASSY, INJECTION	1							
55	1	119802-59970	PIPE ASSY, INJECTION	1							
59	1	119802-59980	PIPE ASSY, INJECTION	1							
64	1	119802-59550	PIPE ASSY, RETURN	1							
65	2	124722-59050	CLIP, HOSE 9	2							
66	2	119802-59560	PIPE, FUEL RETURN	1							
67	1	129486-59551	PIPE ASSY, RETURN	2							
68	2	124722-59050	CLIP, HOSE 9	4							
70	1	119593-59581	CAP	1							
71	1	124060-77680	CLIP, HOSE 10	1							

N:Old ←Yes/No→ New. Q:Old ←No/Yes→ New. R:Old ←Yes/Yes→ New. S:Old ←No/No→ New. W:Add. Z:Discontinued. F:Interchangeable by set. K:Q'ty Change

Copyright (C) YANMAR CO., LTD. All RightsReserved.

Fig.14. FUEL LINE

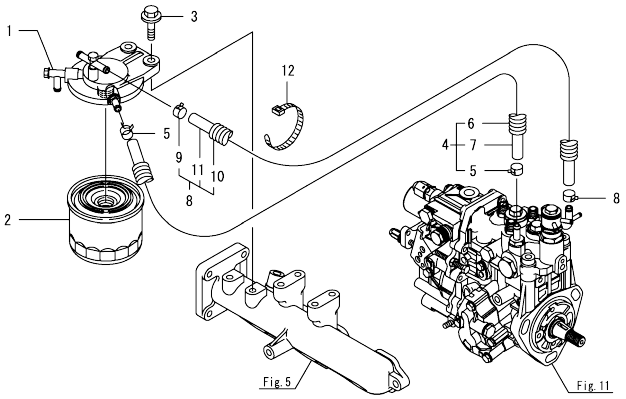

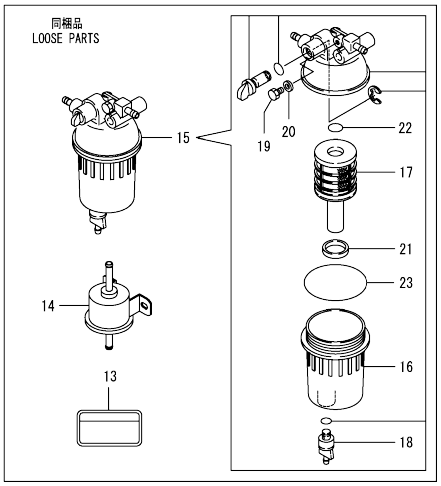

(A)=3TNV82A-BDTE (D)=
(B)= (E)=
(C)= (F)=

No.	Lev.	Parts No.	Description	Q'ty (A)	(B)	(C)	(D)	(E)	(F)	I	R
1	1	129004-55612	BRACKET, FILTER	1							
2	1	119802-55801	FILTER, FUEL	1							
3	1	26106-080302	BOLT, M8X 30 PLATED	2							
4	1	129044-59010	PIPE, D13/7.5X220	1							
5	2	124766-59050	CLIP, HOSE 12	2							
6	2	129044-59100	TUBE, CORRUGATED	1							
7	2	129044-59510	PIPE, FUEL 220	1							
8	1	129630-59010	PIPE ASSY, FUEL	1							
9	2	124766-59050	CLIP, HOSE 12	2							
10	2	129961-59110	TUBE, CORRUGATED	1							
11	2	105025-59560	PIPE, FUEL	1							
12	1	121750-59890	BAND, 140	1							
13	1	114110-07761	LABEL, FUEL OIL CAUT	1							
14	1	119225-52102	PUMP ASSY, FUEL FEED	1							
15	1	129242-55701	SEPARATOR ASSY	1							
16	2	129242-55720	CUP	1							
17	2	129242-55730	ELEMENT	1							
18	2	129242-55740	PLUG, DRAIN	1							
19	2	129242-55750	VALVE, AIR VENT	1							
20	2	129242-55760	GASKET	1							
21	2	129242-55770	FLOAT	1							
22	2	24311-000160	O-RING, 1AP16.0	1							
23	2	24321-000750	O-RING, 1AG75.0	1							

N:Old ←Yes/No→ New. Q:Old ←No/Yes→ New. R:Old ←Yes/Yes→ New. S:Old ←No/No→ New. W:Add. Z:Discontinued. F:Interchangeable by set. K:Q'ty Change

Copyright (C) YANMAR CO., LTD. All RightsReserved.

Fig.15. STARTING MOTOR

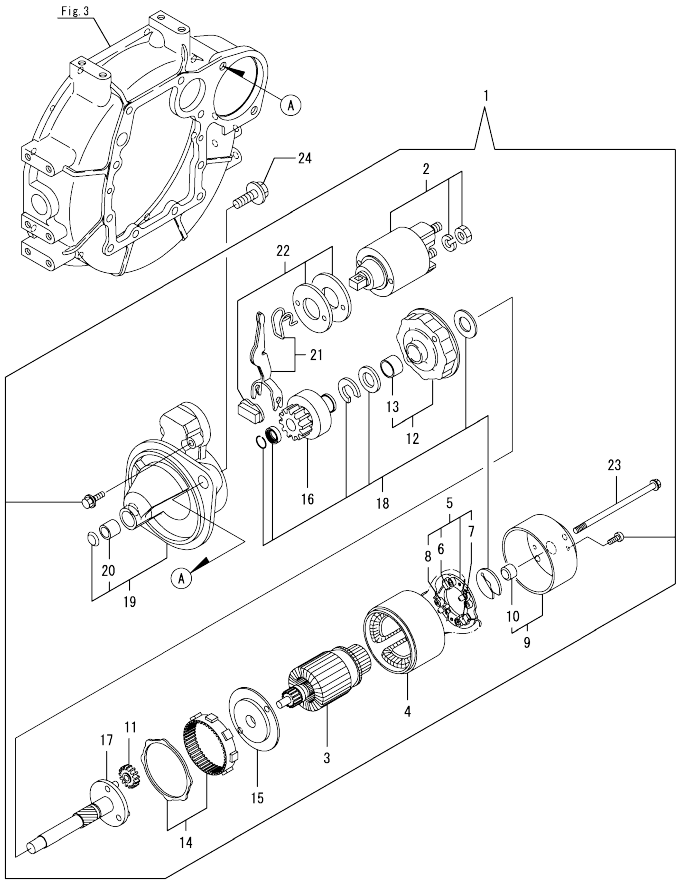

(A)=3TNV82A-BDTE
(B)=
(C)=
(D)=
(E)=
(F)=

No.	Lev.	Parts No.	Description	Q'ty (A)	(B)	(C)	(D)	(E)	(F)	I	R
1	1	129242-77010	STARTER	1							
2	2	129698-77020	SWITCH ASSY	1							
3	2	129242-77100	ARMATURE ASSY	1							
4	2	129242-77110	YOKE ASSY	1							
5	2	129242-77120	HOLDER ASSY, BRUSH	1							
6	3	129242-77130	BRUSH	2							
7	3	129242-77140	BRUSH SET	1							
8	3	129242-77150	SPRING	4							
9	2	129242-77160	COVER ASSY	1							
10	3	129242-77170	METAL	1							
11	2	118400-77170	GEAR	3							
12	2	129242-77180	BRACKET	1							
13	3	129698-77190	BRACKET	1							
14	2	129698-77200	GEAR, INTERNAL	1							
15	2	129242-77210	BRACKET	1							
16	2	129698-77220	PINION ASSY	1							
17	2	129698-77230	SHAFT	1							
18	2	129698-77250	WASHER SET	1							
19	2	129242-77260	CASE ASSY	1							
20	3	X2114535200	METAL, STARTER	1							
21	2	129242-77270	LEVER SET	1							
22	2	129242-77280	COVER ASSY, DUST	1							
23	2	124195-77770	BOLT, THROUGH	2							
24	1	26106-120252	BOLT, M12X 25 PLATED	2							

N:Old ←Yes/No→ New. Q:Old ←No/Yes→ New. R:Old ←Yes/Yes→ New. S:Old ←No/No→ New. W:Add. Z:Discontinued. F:Interchangeable by set. K:Q'ty Change

Copyright (C) YANMAR CO., LTD. All RightsReserved.

Fig.16. GENERATOR

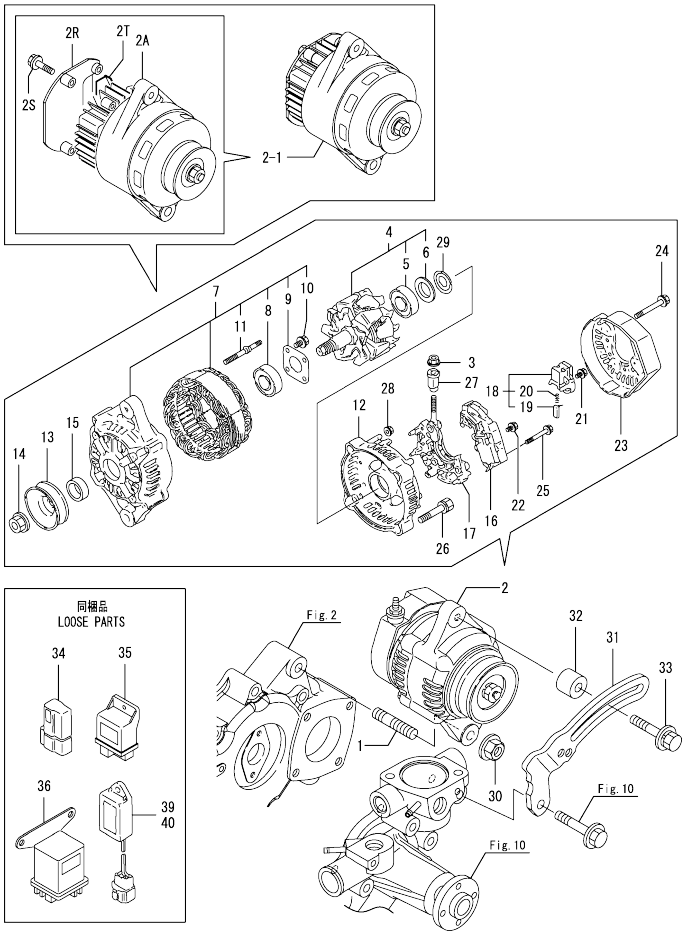

(A)=3TNV82A-BDTE (D)=
(B)= (E)=
(C)= (F)=

No.	Lev.	Parts No.	Description	Q'ty (A)	(B)	(C)	(D)	(E)	(F)	I	R
1	1	129795-01900	BOLT, M10X30	1							
2	1	129423-77200	GENERATOR, 12V-40A	1							
2-1	1	119128-77200	GENERATOR, 12V-40A	1						N	
2A	(A=EF1231) 2	119128-77220	GENERATOR ASSY	1						W	
2R	(A=EF1231) 2	119128-77370	COVER, GENERATOR	1						W	
2S	(A=EF1231) 2	119128-77380	BOLT, FLANGE	4						W	
2T	(A=EF1231) 2	119128-77390	COVER, GENERATOR	1						W	
3	(A=EF1231) 2	X9490561001	NUT	1						Z	
4	(A=EF1231) 2	119620-77380	ROTOR ASSY	1						Z	
5	(A=EF1231) 3	123501-79240	BEARING, BALL	1						Z	
6	(A=EF1231) 3	119620-79250	COVER, BEARING	1						Z	
7	(A=EF1231) 2	119620-77421	FRAME ASSY, DRIVE	1						Z	
8	(A=EF1231) 3	119620-79200	BEARING, BALL	1						Z	
9	(A=EF1231) 3	119620-79210	PLATE, RETAINER	1						Z	
10	(A=EF1231) 3	119620-79220	SCREW	4						Z	
11	(A=EF1231) 3	119620-79230	STUD	2						Z	
12	(A=EF1231) 2	119620-77440	FRAME ASSY, REAR	1						Z	
13	(A=EF1231) 2	119620-77461	PULLEY, GENERATOR	1						Z	
14	(A=EF1231) 2	119620-77471	NUT	1						Z	
15	(A=EF1231) 2	119620-77490	COLLAR	1						Z	
16	(A=EF1231) 2	129423-77710	REGULATOR ASSY	1						Z	
17	(A=EF1231) 2	119620-79260	HOLDER ASSY	1						Z	
18	(A=EF1231) 2	129052-79270	HOLDER ASSY, BRUSH	1						Z	
19	(A=EF1231) 3	119620-77480	BRUSH ASSY, SUB	2						Z	
20	(A=EF1231) 3	119620-79280	SPRING	2						Z	
21	(A=EF1231) 2	119620-79290	SCREW	6						Z	
22	(A=EF1231) 2	119620-79300	SCREW	1						Z	

N:Old ←Yes/No→ New. Q:Old ←No/Yes→ New. R:Old ←Yes/Yes→ New. S:Old ←No/No→ New. W:Add. Z:Discontinued. F:Interchangeable by set. K:Q'ty Change

++ CONTINUE ++

Copyright (C) YANMAR CO., LTD. All RightsReserved.

Fig.16. GENERATOR

(A)=3TNV82A-BDTE (D)=
(B)= (E)=
(C)= (F)=

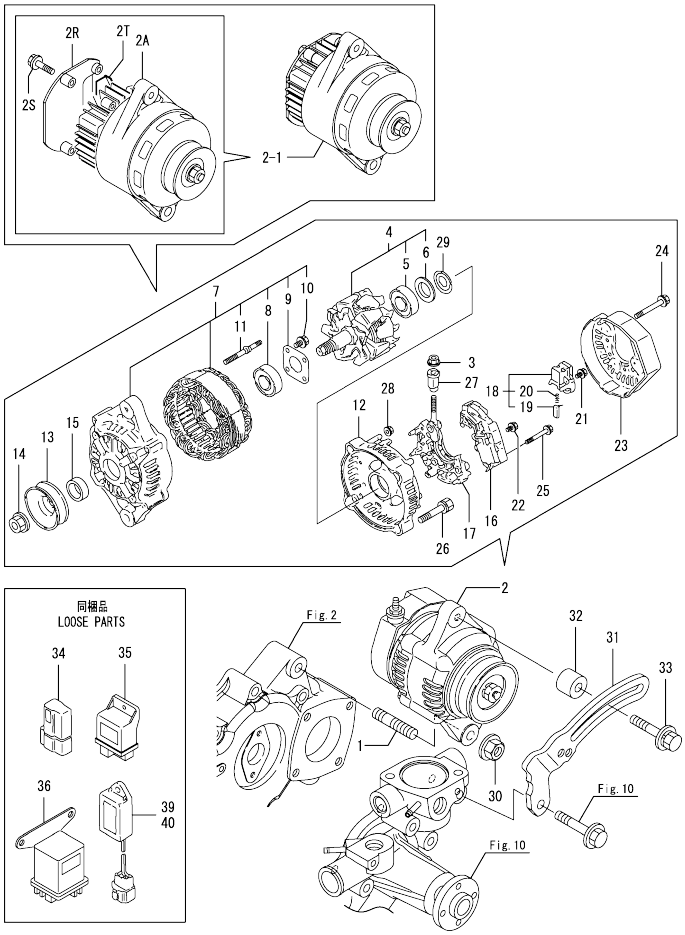

No.	Lev.	Parts No.	Description	Q'ty (A)	(B)	(C)	(D)	(E)	(F)	I	R
	(A=EF1231)										
23	2	129240-79300	COVER	1							Z
	(A=EF1231)										
24	2	119620-79310	BOLT	3							Z
	(A=EF1231)										
25	2	119620-79320	SCREW, W/WASHER	2							Z
	(A=EF1231)										
26	2	119620-79330	BOLT	2							Z
	(A=EF1231)										
27	2	119620-79340	BUSH, INSULATION	1							Z
	(A=EF1231)										
28	2	119620-79350	NUT	2							Z
	(A=EF1231)										
29	2	119620-79360	WASHER, THRUST	1							Z
	(A=EF1231)										
30	1	26306-100002	NUT, M10	1							
31	1	129064-77330	ADJUSTER, BELT	1							
32	1	129067-77340	SPACER, ADJUSTER	1							
33	1	129972-77341	BOLT, ADJUSTER L=50	1							
34	1	119643-66900	DIODE	1							Z
	(A=EF1231)										
35	1	119802-77200	RELAY, SAFETY	1							Z
	(A=EF1231)										
36	1	119650-77911	RELAY ASSY, GLOW	1							Z
	(A=EF1231)										
39	1	128300-77920	TIMER, GLOW PLUG	1							
40	1	129211-77920	TIMER, SECTION 1	1							Z
	(A=EF1231)										

N:Old ←Yes/No→ New. Q:Old ←No/Yes→ New. R:Old ←Yes/Yes→ New. S:Old ←No/No→ New. W:Add. Z:Discontinued. F:Interchangeable by set. K:Q'ty Change

Copyright (C) YANMAR CO., LTD. All RightsReserved.

Fig.17. GASKET SET

(A)=3TNV82A-BDTE
(B)=
(C)=
(D)=
(E)=
(F)=

No.	Lev.	Parts No.	Description	Q'ty (A)	(B)	(C)	(D)	(E)	(F)	I	R
1	1	719812-92750	GASKET SET	1							1
2	2	119812-01330	GASKET, HEAD	1							
3	2	119609-32040	O-RING, P16	2							
4	2	121850-51960	O-RING	1							
5	2	22190-080002	WASHER, SEAL 6	7							
6	2	24311-000320	O-RING, 1AP32.0	2							
7	2	24341-000240	O-RING, 1AS24.0	1							
8	2	22190-220002	WASHER, SEAL 22	1							
9	2	119803-11340	SEAL, VALVE STEM	3							
10	2	124160-11340	SEAL, VALVE STEM	3							
11	2	119802-11870	PROTECTOR, NOZZLE	3							
12	2	119625-11880	SEAT, NOZZLE	3							
13	2	119802-11310	GASKET, BONNET	1							
14	2	24311-000120	O-RING, 1AP12.0	3							
15	2	119810-12112	GASKET, MANIFOLD	1							
16	2	129150-77511	GASKET	1							
17	2	119810-13110	GASKET	1							
18	2	129004-13200	GASKET, SILENCER	2							
19	2	129150-32020	GASKET, PUMP	1							
20	2	129150-35042	GASKET	1							
21	2	129150-35111	GASKET	1							
22	2	22190-100002	WASHER, SEAL 10	2							
23	2	129486-42050	GASKET, WATER PUMP	1							
24	2	23414-080000	GASKET, 8X1.0	1							
25	2	129150-49811	GASKET, THERMOSTAT	1							
26	2	129795-49551	GASKET	1							
27	2	124465-44950	GASKET, 16	2							
28	2	129C26-01890	GASKET, HO-P	1							
29	2	24321-000800	O-RING, 1AG80.0	1							
30	2	171353-26081	GASKET	1							
31	2	24321-000850	O-RING, 1AG85.0	1							
32	1	129400-92420	HONE	1							1
33	1	977770-1207F	GASKET.LIQUID	1							1

Remarks
(1)Optional parts.

N:Old $\frac{\text{Yes}}{\text{No}}$ New. Q:Old $\frac{\text{No}}{\text{Yes}}$ New. R:Old $\frac{\text{Yes}}{\text{Yes}}$ New. S:Old $\frac{\text{No}}{\text{No}}$ New. W:Add. Z:Discontinued. F:Interchangeable by set. K:Q'ty Change

Copyright (C) YANMAR CO., LTD. All RightsReserved.

Parts No. Index

Parts No.	Fig. No.	Ref. No.
104211-11180	4	22
104211-11370	4	12
105025-59560	14	11
114110-07761	14	13
114250-39450	9	47
114250-53080	13	5
114250-53120	13	11
114250-53130	13	12
114250-53140	13	13
114250-53210	13	14
118400-77170	15	11
119128-77200	16	2 -1
119128-77220	16	2 A
119128-77370	16	2 R
119128-77380	16	2 S
119128-77390	16	2 T
119131-18320	6	5
119225-52102	14	14
119255-44660	10	50
119260-34810	9	16
119305-59120	13	42
119593-59581	13	70
119609-32040	2	9
	17	3
119620-01750	3	3
119620-02020	1	9
119620-77380	16	4
119620-77421	16	7
119620-77440	16	12
119620-77461	16	13
119620-77471	16	14
119620-77480	16	19
119620-77490	16	15
119620-79200	16	8
119620-79210	16	9
119620-79220	16	10
119620-79230	16	11
119620-79250	16	6
119620-79260	16	17
119620-79280	16	20
119620-79290	16	21
119620-79300	16	22
119620-79310	16	24
119620-79320	16	25
119620-79330	16	26
119620-79340	16	27
119620-79350	16	28
119620-79360	16	29
119625-11880	4	28
	17	12

Parts No.	Fig. No.	Ref. No.
119640-01640	3	8
119643-66900	16	34
119650-77911	16	36
119653-77950	12	118
119660-61901	12	61
119717-02930	1	15
119802-01561	2	5
119802-03010	4	37
119802-03090	5	1
119802-03110	4	39
119802-03121	4	40
119802-03130	4	41
119802-03141	4	42
119802-11100	4	19
119802-11110	4	20
119802-11241	4	1
119802-11251	4	2
119802-11260	4	4
119802-11270	4	5
119802-11280	4	6
119802-11310	4	44
	17	13
119802-11350	4	36
119802-11650	4	8
119802-11810	4	56
119802-11870	4	27
	17	11
119802-11900	4	29
119802-12130	5	4
119802-12560	5	15
119802-13109	6	1
119802-13640	6	3
119802-13740	6	4
119802-14580	7	3
119802-21650	8	8
119802-22500	8	17
119802-22950	8	34
119802-25071	7	27
119802-25101	7	10
119802-25901	7	15
119802-34831	9	17
119802-34850	9	18
119802-39450	9	49
119802-42001	10	1
119802-44570	10	49
119802-44600	10	46
119802-49610	10	36
119802-49620	10	41
119802-49711	10	37
119802-49721	10	42

Parts No.	Fig. No.	Ref. No.
119802-49730	10	38
119802-51090	11	12
119802-51250	11	134
119802-51560	11	58
119802-51590	11	64
119802-51600	11	65
119802-51680	11	69
119802-51690	11	70
119802-55801	14	2
119802-59320	10	40
119802-59550	13	64
119802-59560	13	66
119802-59960	13	51
119802-59970	13	55
119802-59980	13	59
119802-77200	16	35
119803-11340	4	23
	17	9
119803-11700	4	13
119803-21000	8	1
119803-21200	8	4
119803-22080	8	15
119803-25050	7	9
119803-53400	13	15
119803-77821	4	53
119803-77830	4	54
119807-61420	12	24
119808-12520	5	11
119808-12540	5	12
119810-01200	1	27
119810-01730	3	6
119810-02871	1	32
119810-02941	1	35
119810-11120	4	21
119810-12112	5	3
	17	15
119810-13110	6	2
	17	17
119810-14400	7	2
119810-23200	8	26
119810-23601	8	27
119810-23611	8	30
119810-23910	8	29
119810-35401	9	22
119810-42051	10	3
119810-42120	10	4
119810-42281	10	8
119810-42290	10	9
119812-01330	1	28
	17	2

Parts No.	Fig. No.	Ref. No.
119813-22300	8	21
119843-01780	3	7
119865-21600	8	14
119934-01800	2	3
119934-59910	11	131
119940-59130	9	43
119944-49300	9	45
120270-54410	4	30
120445-44530	10	48
121023-01551	2	22
121023-26071	7	16
121111-21501	8	11
121250-44901	10	33
121267-44760	10	24
121450-42450	10	32
121750-59890	14	12
121850-21680	8	10
121850-51960	2	10
	17	4
123501-79240	16	5
124060-01050	1	4
124060-11800	4	55
124060-77680	13	71
124160-01751	2	6
	4	35
124160-01910	1	6
		7
124160-11340	4	24
	17	10
124160-11360	4	47
124160-39140	9	48
124195-77770	15	23
124240-01871	2	7
		19
124465-44950	10	34
		35
	17	27
124722-59050	10	39
		43
	13	65
		68
124766-59050	14	5
		9
126650-12680	5	14
128300-77920	16	39
129001-01250	1	5
129001-32001	9	1
129004-13200	6	7
	17	18
129004-44500	10	44

Parts No. Index

Parts No.	Fig. No.	Ref. No.
129004-49010	10	51
129004-49020	10	52
129004-55612	14	1
129005-59830	9	50
129006-35100	9	30
129006-44480	9	35
129008-51390	11	40
129008-51900	11	10
129008-51920	11	11
129008-53000	13	2
129008-77800	4	52
129044-59010	14	4
129044-59100	14	6
129044-59510	14	7
129052-79270	16	18
129054-42320	10	11
129064-77330	16	31
129067-77340	16	32
129100-01580	3	1
		13
	8	2
129100-01640	3	14
129107-44590	10	45
129150-02450	7	4
129150-03070	4	38
129150-11230	4	9
129150-11280	4	7
129150-11750	4	11
129150-14101	7	6
129150-14200	7	1
129150-25301	7	14
129150-32020	9	14
	17	19
129150-35042	9	21
	17	20
129150-35111	9	33
	17	21
129150-35153	9	56
129150-49080	10	54
129150-49100	10	53
129150-49811	10	27
	17	25
129150-59120	13	46
129150-59131	13	45
		49
129150-77511	5	7
	17	16
129155-49801	10	26
129155-51280	12	6
129155-61460	12	26

Parts No.	Fig. No.	Ref. No.
129209-12500	5	9
129209-12510	5	10
129209-12540	5	13
129211-77920	16	40
129240-79300	16	23
129242-55701	14	15
129242-55720	14	16
129242-55730	14	17
129242-55740	14	18
129242-55750	14	19
129242-55760	14	20
129242-55770	14	21
129242-77010	15	1
129242-77100	15	3
129242-77110	15	4
129242-77120	15	5
129242-77130	15	6
129242-77140	15	7
129242-77150	15	8
129242-77160	15	9
129242-77170	15	10
129242-77180	15	12
129242-77210	15	15
129242-77260	15	19
129242-77270	15	21
129242-77280	15	22
129255-61410	12	23
129335-44740	10	23
129350-49530	10	28
129400-92420	17	32
129403-42380	10	21
129410-03990	5	2
129417-33111	9	29
129417-35150	9	32
129423-77200	16	2
129423-77710	16	16
129484-26200	7	18
129484-26210	7	20
129486-01670	3	17
129486-12581	5	6
129486-42050	10	16
	17	23
129486-59551	13	67
129508-33010	9	27
129508-33050	9	28
129508-49030	9	36
129508-49040	9	40
129604-01520	2	4
129612-01600	3	2
129630-59010	14	8

Parts No.	Fig. No.	Ref. No.
129698-77020	15	2
129698-77190	15	13
129698-77200	15	14
129698-77220	15	16
129698-77230	15	17
129698-77250	15	18
129792-22400	8	22
129795-01780	3	16
129795-01900	16	1
129795-01950	2	8
129795-02412	1	12
129795-21661	8	9
129795-49551	10	29
	17	26
129900-07900	4	50
129961-59110	14	10
129972-77341	16	33
129C26-01890	2	20
	17	28
158552-51151	11	15
158552-51571	11	59
		60
158552-51580	11	63
158552-51600	11	73
158552-51670	11	127
158552-51781	11	99
158552-52100	11	129
158552-52311	11	108
158552-52400	11	109
158552-52500	11	130
158552-61061	12	86
158552-61441	12	25
158552-61900	12	77
158553-51551	11	125
158553-51630	11	74
158553-51650	11	76
158553-51660	11	77
158553-51670	11	68
158553-51680	11	78
158553-51770	11	105
158553-51930	11	102
	12	7
158553-61050	12	3
158553-61070	12	4
158557-51570	11	61
158563-51281	11	38
		39
158563-51330	11	49
158600-51270	11	37
158601-51550	11	57

Parts No.	Fig. No.	Ref. No.
158601-51570	11	62
158601-51650	11	126
158601-51770	11	98
158601-51790	11	100
171008-03990	9	37
		41
171051-01921	1	8
171056-49120	10	31
171353-26081	7	17
	17	30
171420-21580	8	12
22190-080002	2	11
	9	51
		53
	17	5
22190-100002	9	54
	17	22
22190-120002	11	103
		110
		132
	12	65
22190-180002	11	104
		111
22190-220002	3	10
	17	8
22217-140000	11	112
22312-050140	11	113
22351-030010	8	7
22351-050010	11	114
22351-060012	4	31
22512-070140	7	7
	8	5
22857-500100	4	45
		46
23000-060000	5	16
23010-038000	10	58
23080-015000	9	39
		44
23414-080000	10	17
	17	24
23857-030000	9	52
23876-030000	10	13
24105-060064	7	23
24311-000070	11	116
24311-000120	4	48
	17	14
24311-000160	14	22
24311-000320	2	12
	4	49
	17	6

Parts No. Index

Parts No.	Fig. No.	Ref. No.
24316-240100	9	19
24321-000750	14	23
24321-000800	17	29
24321-000850	7	24
	17	31
24341-000240	2	23
	17	7
24356-190180	11	117
24356-190200	11	71
		118
24372-000150	11	72
25132-003700	10	22
26014-060122	10	47
26106-060102	11	119
	12	68
26106-060142	10	14
	12	83
		84
26106-060162	2	24
26106-060202	10	15
	12	85
26106-060302	10	25
26106-080122	10	18
26106-080142	7	8
26106-080162	2	13
		14
		21
	3	11
	4	51
	9	20
	11	135
26106-080202	5	8
	9	46
	11	136
26106-080222	10	30
26106-080252	4	32
	5	5
26106-080302	2	15
	14	3
26106-080352	3	18
	9	26
	10	19
26106-080402	7	13
26106-080452	3	12
	4	33
26106-080502	4	34
26106-080552	2	16
	10	20
26106-080852	2	17
26106-100452	7	25

Parts No.	Fig. No.	Ref. No.
26106-120252	15	24
26206-100252	3	4
26206-100302	3	5
26306-080002	2	18
	6	6
26306-100002	16	30
26366-060002	9	55
26450-060252	9	15
26450-080282	7	26
26450-080452	11	121
26756-060002	12	69
26776-140002	11	122
27241-120000	1	13
27241-300000	1	14
27241-400000	4	18
27310-070001	4	25
719802-01560	1	1
719803-22900	8	32
719810-02981	1	29
719810-23100	8	23
719812-92750	17	1
719933-51301	11	1
729008-53100	13	1
729652-01500	2	1
977770-1207F	17	33
X2114535200	15	20
X9490561001	16	3

Parts No.	Fig. No.	Ref. No.

Parts No.	Fig. No.	Ref. No.