YANMAR

PARTS CATALOG

0CW10-M57600EN

Last update Mar., 2013

PREFACE

1. This parts catalog is the 1st edition of 4TNV84T-BGYM for YA.

Pub.No. : 0CW10-G57600
Published : October, 2009

2. Model name

Engine model	Vehicle	Vehicle made by
4TNV84T-BGYM	GENERATOR	YA

Directions for the Parts Catalog.

1.The parts stipulated in this Parts Catalog are not necessarily standard equipped parts.
2.Parts may change without prior notice.
3.The following is an example of the Parts Catalog format.

0CF10-G21601 29. FUEL INJECTION PUMP(W/BOOST)

(A)=4JH-DT
(B)=4JH-DTZ
(C)=4JH-DTZP
(D)=4JH-DTZA
(E)=4JH-DTZY
(F)=

① REF.	② LEV.	PARTS NO.	DESCRIPTION	Q'TY (A)	(B)	(C)	(D)	(E)	(F)	③ I	⑤ R
1	1	729595-51390	FUEL INJECTION PUMP	1	1	1	1	1			1
1-1	1	729595-51391	FUEL INJECTION PUMP	1	1	1	1	1		N	1
	(A=E00185)	(B=E00200)									
3	2	26022-060162	SCREW M 6X 16	9	9	9	9	9			
3-1 ④	2	26022-060162	SCREW M 6X 16	4	4	4	4	4		K	
	(A=E00156)	(B=E00156)	(C=E00156) (D=E00156)	(E=E00156)							
4	2	129470-51040	CAMSHAFT	1	1	1	1	1			
5	2	122710-51050	BEARING, ROLLER	2	2	2	2	2			
6	2	129470-51060	RETAINER	1	1	1	1	1			

Remarks
(1) BOOST COMPEMSATOR TYPE. OPTIONAL
PART, TO E00155,(4JH-DT, 4JH-DTZ

① Ref. No.

The Ref. No. listed may not be in accordance with the illustration Ref. No.

(Ex.) Illustration No. 1 List Ref No. 1 (Before change) → 1- 1 (After change)

For interchangeable symbols N, R and K, illustrations for new parts may be abbreviated.

② Lev. (Level)

Level indication
The numbers below indicate the level of relativity towards the main part.
1 ----- Main parts (Assembly parts)
2 ----- Sub component included in " 1 ".
3 ----- Sub component included in " 2 ".
Note) Parts that are not for sale are partially illustrated but not listed.

③ Interchangeability Mark

When a part change takes place, one of the following interchangeability symbols is indicated beside the part.

Symbol	Interchangeability	Contents note
N	Old ← Yes / No → New	New Part is interchangeable for Old Part but Old Part is not interchangeable for New Part.
Q	Old ← No / Yes → New	New Part is not interchangeable for Old Part but Old Part is interchangeable for New Part.
R	Old ← Yes / Yes → New	New/ Old Parts are both interchangeable.
S	Old ← No / No → New	New/ Old Parts are both not interchangeable.
W		Part newly added.
Z		Part discontinued.
F		Not interchangeable by a single part but interchangeable together with related parts.
K		Changes only for used parts quantities.

④ Effective Machine No.

When a part changes, the effective Machine No. will be indicated in the (A)-(F) column.

Product Symbol	Product No.	Product Symbol	Product No.
C	Clutch No. Compressor No.	F	Machine No. (Agricultural Equip.)
D	Drive No.	M	Machine No.
E	Engine No.		

Note 1) A date may follow the symbol. (Ex.) 1996.01
Note 2) " XXXXX " and " ZZZZZ " are for parts that could not be predicted or for engine models that could not be identified.
Note 3) (A=E00185) is the E (Engine Serial Number) for the column (A) model (in this case 4JH-DT) after the parts design change.

⑤ Remarks Mark

Figures or alphabets (symbols) are entered in the remarks column.
The comments (remarks) on parts that are indicated at the bottom of the illustration are the same symbols as those stated above.

Contents

0CW10-M57600

Fig. No.	Fig. Name
ENGINE SECTION(4TNV84T-BGYM)	
1.	CYLINDER BLOCK
2.	GEAR HOUSING
3.	FLYWHEEL HOUSING & OIL SUMP
4.	CYLINDER HEAD & BONNET
5.	SUCTION MANIFOLD
6.	CAMSHAFT & DRIVING GEAR
7.	TURBINE
8.	CRANKSHAFT & PISTON
9.	LUB.OIL SYSTEM
10.	LUB.OIL LINE
11.	COOLING FRESH WATER SYSTEM
12.	COOLING SEA WATER SYSTEM
13.	COOLING FRESH WATER COOLER
14.	FUEL INJECTION PUMP
15.	GOVERNOR
16.	FUEL INJECTION VALVE
17.	FUEL LINE
18.	STARTING MOTOR
19.	GENERATOR
20.	GASKET SET

Fig.1. CYLINDER BLOCK

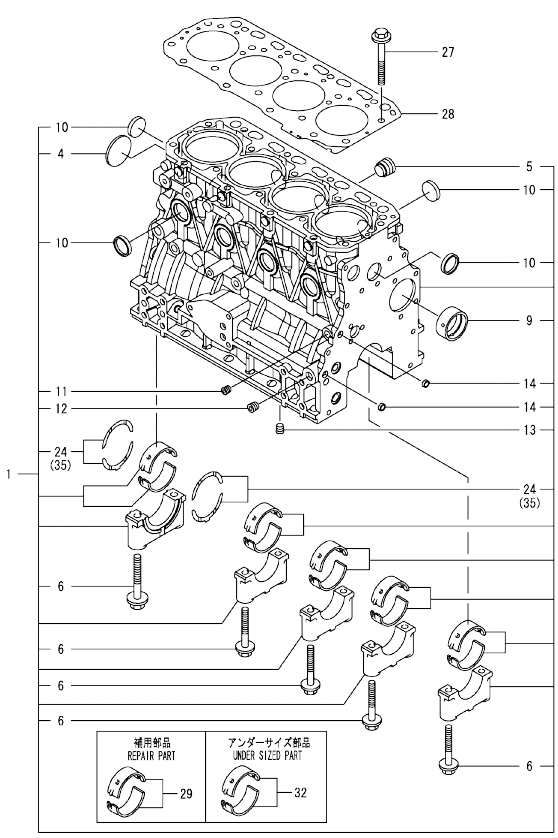

Remarks
(1) REPAIR PART.
(2) UNDER-SIZE(U.S=0.25)PART.
(3) OVER-SIZE(O.S=0.25)PART.

(A)=4TNV84T-BGYM (D)=
(B)= (E)=
(C)= (F)=

No.	Lev.	Parts No.	Description	Q'ty (A)	(B)	(C)	(D)	(E)	(F)	I	R
1	1	729508-01560	BLOCK ASSY, CYLINDER	1							
4	2	129001-01250	PLUG, 50	1							
5	2	171051-01921	PLUG, NPTF1	1							
6	2	129150-02020	BOLT, METAL CAP	10							
9	2	129795-02412	BUSH, CAMSHAFT	1							
10	2	27241-300000	PLUG 30	8							
11	2	124060-01050	PLUG, PT1/8	1							
12	2	124160-01910	PLUG, PT1/4	2							
13	2	124160-01910	PLUG, PT1/4	1							
14	2	27241-120000	PLUG, 12	2							
24	2	129150-02931	BEARING, THRUST	2							
27	1	129150-01200	BOLT, HEAD	18							
28	1	129508-01330	GASKET, HEAD	1							
29	1	129001-02931	BEARING, MAIN	5							1
32	1	129150-02871	BEARING, 0.25 US	5							2
35	1	129150-02941	BEARING, THRUST 0.25	1							3

N:Old ←Yes/No→ New. Q:Old ←No/Yes→ New. R:Old ←Yes/Yes→ New. S:Old ←No/No→ New. W:Add. Z:Discontinued. F:Interchangeable by set. K:Q'ty Change

Copyright (C) YANMAR GLOBAL CS CO., LTD. All RightsReserved.

Fig.2. GEAR HOUSING

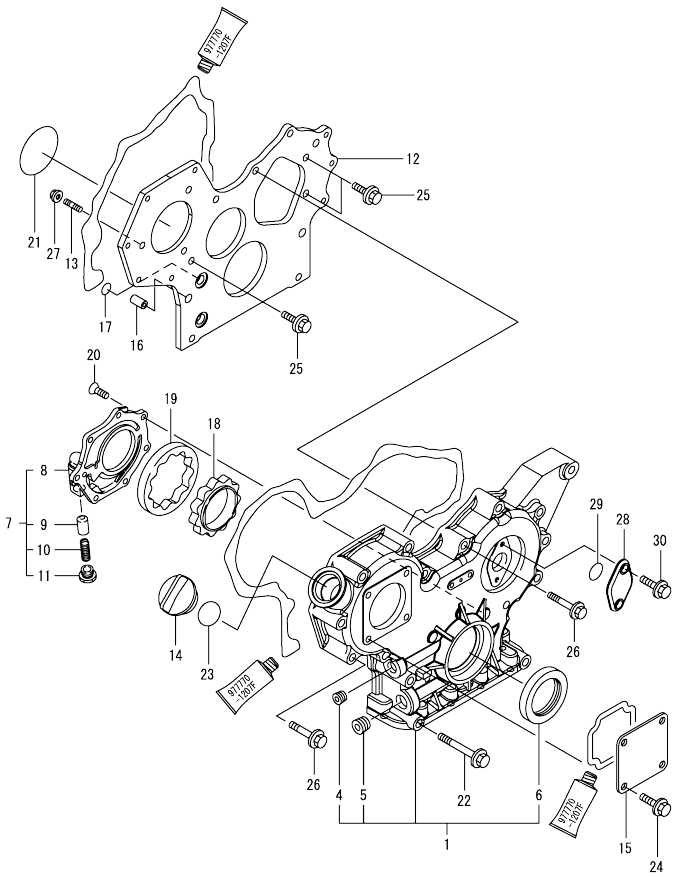

(A)=4TNV84T-BGYM
(B)=
(C)=
(D)=
(E)=
(F)=

No.	Lev.	Parts No.	Description	Q'ty (A)	(B)	(C)	(D)	(E)	(F)	I	R
1	1	729508-01500	CASE ASSY, GEAR	1							
4	2	23876-030000	PLUG, R03	1							
5	2	23876-040000	PLUG, R04	1							
6	2	129795-01800	SEAL, OIL	1							
7	1	119802-32100	COVER ASSY	1							
8	2	119802-32070	COVER	1							
9	2	129900-32130	VALVE, RELIEF	1							
10	2	129418-32320	SPRING	1							
11	2	129001-32330	PLUG	1							
12	1	119802-01520	FLANGE, GEAR CASE	1							
13	1	119802-01561	STUD, M8X25	3							
14	1	124160-01751	COVER, FILLER	1							
15	1	124240-01871	COVER	1							
16	1	129795-01950	PIPE, KNOCK L=18	2							
17	1	119609-32040	O-RING, P16	4							
18	1	129508-32111	ROTOR, INNER	1							
19	1	129508-32120	ROTOR, OUTER	1							
20	1	119802-32130	SCREW, M6X16	7							
21	1	121850-51960	O-RING	1							
22	1	26106-080852	BOLT, M8X 85 PLATED	3							
23	1	24311-000320	O-RING, 1AP32.0	1							
24	1	26106-080162	BOLT, M8X 16 PLATED	4							
25	1	26106-080162	BOLT, M8X 16 PLATED	3							
26	1	26106-080552	BOLT, M8X 55 PLATED	12							
27	1	26306-080002	NUT, M8	3							
28	1	121023-01551	COVER	1							
29	1	24341-000240	O-RING, 1AS24.0	1							
30	1	26106-060162	BOLT, M6X 16 PLATED	2							

N:Old ◄Yes/No► New. Q:Old ◄No/Yes► New. R:Old ◄Yes/Yes► New. S:Old ◄No/No► New. W:Add. Z:Discontinued. F:Interchangeable by set. K:Q'ty Change

Copyright (C) YANMAR GLOBAL CS CO., LTD. All RightsReserved.

Fig.3. FLYWHEEL HOUSING & OIL SUMP

(A)=4TNV84T-BGYM (D)=
(B)= (E)=
(C)= (F)=

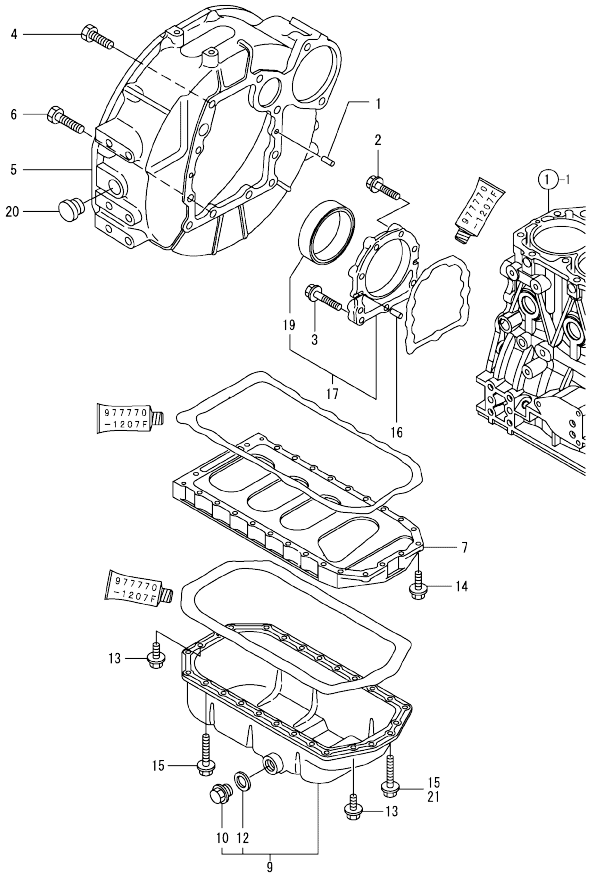

No.	Lev.	Parts No.	Description	Q'ty (A)	(B)	(C)	(D)	(E)	(F)	I	R
1	1	129100-01580	PIN, M8X16	2							
2	1	129486-01670	BOLT, M8X30	6							
3	1	26106-080352	BOLT, M8X 35 PLATED	3							
4	1	26206-100252	BOLT, M10X 25 PLATED	6							
5	1	171487-01600	HOUSING, FLYWHEEL	1							
6	1	26206-100302	BOLT, M10X 30 PLATED	2							
7	1	129400-01730	SPACER, OIL SUMP	1							
9	1	729577-01720	SUMP ASSY, OIL	1							
10	2	119640-01640	PLUG, DRAIN M22	1							
12	2	22190-220002	WASHER, SEAL 22	1							
13	1	26106-080162	BOLT, M8X 16 PLATED	4							
14	1	26106-080252	BOLT, M8X 25 PLATED	2							
15	1	26106-080452	BOLT, M8X 45 PLATED	20							
16	1	129100-01580	PIN, M8X16	2							
17	1	129100-01640	CASE ASSY, OIL SEAL	1							
19	2	129795-01780	SEAL, OIL	1							
20	1	119620-01750	CAP	1							
21	1	26106-080502	BOLT, M8X 50 PLATED	4							

N:Old ◄Yes/No► New. Q:Old ◄No/Yes► New. R:Old ◄Yes/Yes► New. S:Old ◄No/No► New. W:Add. Z:Discontinued. F:Interchangeable by set. K:Q'ty Change

Copyright (C) YANMAR GLOBAL CS CO., LTD. All RightsReserved.

Fig.4. CYLINDER HEAD & BONNET

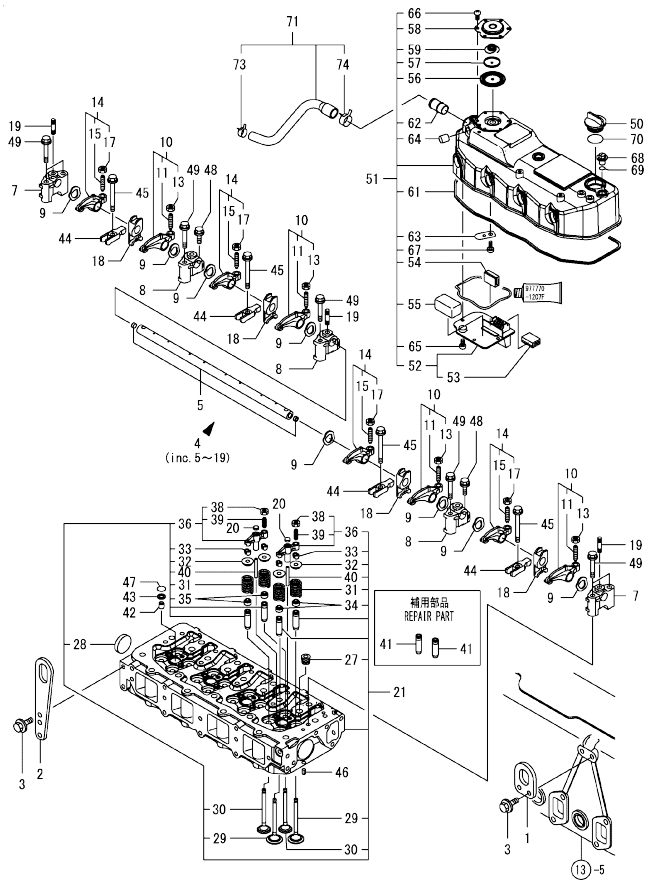

(A)=4TNV84T-BGYM
(B)=
(C)=
(D)=
(E)=
(F)=

No.	Lev.	Parts No.	Description	Q'ty (A)	(B)	(C)	(D)	(E)	(F)	I	R
1	1	129470-07230	LIFTER	1							
2	1	129900-07900	LIFTER	1							
3	1	26106-080162	BOLT, M8X 16 PLATED	4							
4	1	129508-11241	SHAFT ASSY, ROCKER	1							
5	2	129508-11250	SHAFT, ROCKER ARM	1							
7	2	129508-11260	SUPPORT, ROCKER ARM	2							
8	2	129508-11270	SUPPORT, ROCKER ARM	3							
9	2	129508-11280	WASHER	8							
10	2	129508-11650	ARM, ROCKER	4							
11	3	129150-11230	SCREW, VALVE ADJUST	4							
13	3	129150-11750	NUT, M8	4							
14	2	129508-11660	ARM, ROCKER	4							
15	3	129150-11230	SCREW, VALVE ADJUST	4							
17	3	129150-11750	NUT, M8	4							
18	2	129508-11920	RETAINER	4							
19	2	26226-080352	STUD, M8X 35	3							
20	1	123907-11550	SEAT, VALVE BRIDGE	8							
21	1	129509-11700	HEAD ASSY, CYLINDER	1							
27	2	23876-020000	PLUG, R02	4							
28	2	27241-400000	PLUG, 40	2							
29	2	129508-11100	VALVE, INTAKE	8							
30	2	129508-11110	VALVE, EXHAUST	8							
31	2	129508-11130	SPRING, VALVE	16							
32	2	129508-11180	RETAINER, SPRING	16							
33	2	119717-11190	COTTER	32							
34	2	119717-11340	SEAL, VALVE STEM	8							
35	2	119717-11350	SEAL, VALVE STEM	8							
36	2	129672-11510	BRIDGE ASSY, VALVE	8							
38	3	129150-11750	NUT, M8	8							
39	3	123907-11830	ADJUSTER	8							
40	2	129508-11820	GUIDE	8							
41	1	119717-11800	GUIDE, VALVE	16							1
42	1	119802-11870	PROTECTOR, NOZZLE	4							
43	1	119625-11880	SEAT, NOZZLE	4							
44	1	129508-11900	RETAINER, NOZZLE	4							
45	1	129907-11950	BOLT, M8X75	4							
46	1	22351-060012	PIN, SPRING 6.0X12	2							
47	1	24311-000120	O-RING, 1AP12.0	4							
48	1	26106-080252	BOLT, M8X 25 PLATED	3							
49	1	26106-080502	BOLT, M8X 50 PLATED	7							
50	1	124160-01751	COVER, FILLER	1							
51	1	129584-11350	BONNET ASSY, HEAD	1							
52	2	129508-03010	PLATE	1							
53	3	119802-03070	BAFFLE, BREATHER	1							
54	2	129150-03070	BAFFLE, BREATHER	1							
55	2	129907-03070	BAFFLE, BREATHER	1							
56	2	123907-03100	DIAPHRAGM	1							
57	2	123907-03110	PLATE	1							
58	2	123907-03120	PLATE, BREATHER	1							
59	2	123907-03140	SPRING, DIAPHRAGM	1							
61	2	129508-11310	GASKET, BONNET	1							

Remarks
(1) REPAIR PART.

N:Old ←Yes/No→ New. Q:Old ←No/Yes→ New. R:Old ←Yes/Yes→ New. S:Old ←No/No→ New. W:Add. Z:Discontinued. F:Interchangeable by set. K:Q'ty Change

++ CONTINUE ++

Copyright (C) YANMAR GLOBAL CS CO., LTD. All RightsReserved.

Fig.4. CYLINDER HEAD & BONNET

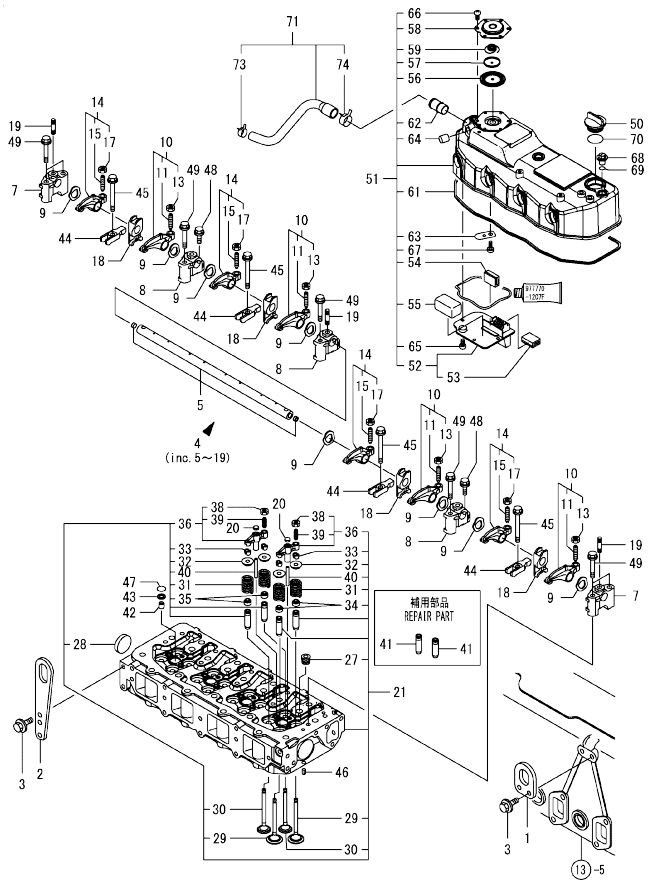

(A)=4TNV84T-BGYM (D)=
(B)= (E)=
(C)= (F)=

No.	Lev.	Parts No.	Description	Q'ty (A)	(B)	(C)	(D)	(E)	(F)	I	R
62	2	129001-11340	PIPE , BREATHER	1							
63	2	129009-11340	SPRING	1							
64	2	119640-61400	PLUG	1							
65	2	22857-500100	SCREW, 5X10	4							
66	2	22857-500100	SCREW, 5X10	6							
67	2	22857-500100	SCREW, 5X10	1							
68	1	124160-11360	KNOB	3							
69	1	24311-000120	O-RING, 1AP12.0	3							
70	1	24311-000320	O-RING, 1AP32.0	1							
71	1	129584-03010	PIPE ASSY, BREATHER	1							
73	2	129301-03660	CLAMP 16	1							
74	2	129410-03990	CLIP	1							

Remarks
(1) REPAIR PART.

N:Old ←Yes/No→ New. Q:Old ←No/Yes→ New, R:Old ←Yes/Yes→ New. S:Old ←No/No→ New. W:Add. Z:Discontinued. F:Interchangeable by set. K:Q'ty Change

Copyright (C) YANMAR GLOBAL CS CO., LTD. All RightsReserved.

Fig.5. SUCTION MANIFOLD

(A)=4TNV84T-BGYM (D)=
(B)= (E)=
(C)= (F)=

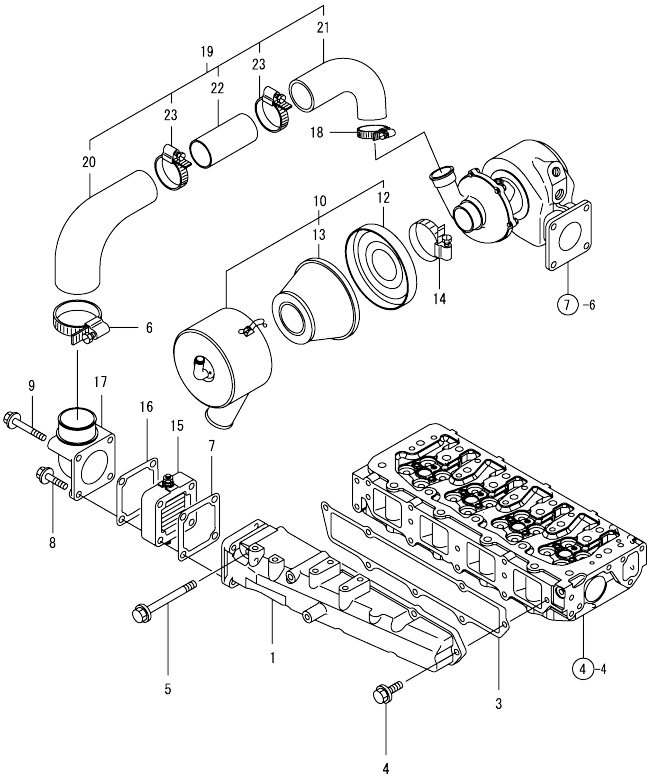

No.	Lev.	Parts No.	Description	Q'ty (A)	(B)	(C)	(D)	(E)	(F)	I	R
1	1	129508-12100	MANIFOLD, AIR INTAKE	1							
3	1	129508-12110	GASKET, MANIFOLD	1							
4	1	26106-080202	BOLT, M8X 20 PLATED	5							
5	1	26106-080802	BOLT, M8X 80 PLATED	2							
6	1	23000-060000	CLAMP, 60	1							
7	1	129150-77511	GASKET	1							
8	1	26106-080402	BOLT, M8X 40 PLATED	2							
9	1	26106-080802	BOLT, M8X 80 PLATED	2							
10	1	129477-12500	SILENCER ASSY	1							
12	2	129477-12530	PLATE	1							
13	2	124770-12540	ELEMENT	1							
14	1	23000-048000	CLAMP, 48	1							
15	1	129100-77501	HEATER	1							
16	1	129100-77510	GASKET	1							
17	1	171340-77520	BEND	1							
18	1	23000-048000	CLAMP, 48	1							
19	1	129649-12851	HOSE ASSY, INTAKE	1							
20	2	129649-12811	PIPE, AIR INTAKE	1							
21	2	129649-12821	PIPE, AIR INTAKE	1							
22	2	129649-12832	JOINT	1							
23	2	23000-054000	CLAMP, 54	2							

N:Old ◄Yes/No► New. Q:Old ◄No/Yes► New. R:Old ◄Yes/Yes► New. S:Old ◄No/No► New. W:Add. Z:Discontinued. F:Interchangeable by set. K:Q'ty Change

Copyright (C) YANMAR GLOBAL CS CO., LTD. All RightsReserved.

Fig.6. CAMSHAFT & DRIVING GEAR

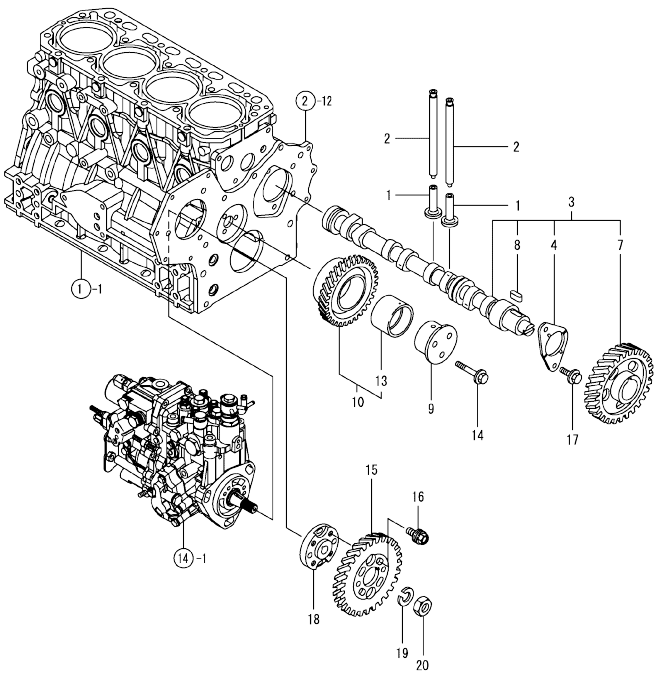

(A)=4TNV84T-BGYM (D)=
(B)= (E)=
(C)= (F)=

No.	Lev.	Parts No.	Description	Q'ty (A)	(B)	(C)	(D)	(E)	(F)	I	R
1	1	129150-14200	TAPPET	8							
2	1	129150-14400	ROD, PUSH L=178	8							
3	1	129508-14580	CAMSHAFT ASSY	1							
4	2	129150-02450	BEARING, THRUST	1							
7	2	129150-14101	GEAR, CAMSHAFT	1							
8	2	22512-070140	KEY, 7X 14	1							
9	1	119802-25051	SHAFT, IDLE	1							
10	1	119802-25101	GEAR ASSY, IDLE	1							
13	2	119802-25070	BUSH, IDLE GEAR	1							1
14	1	26106-080402	BOLT, M8X 40 PLATED	3							
15	1	119802-25901	GEAR, PUMP	1							
16	1	129150-25301	BOLT	4							
17	1	26106-080142	BOLT, M8X 14 PLATED	2							
18	1	158552-51151	FLANGE	1							
19	1	22217-140000	WASHER, SPRING 14	1							
20	1	26776-140002	NUT, LOCK M14	1							

Remarks
(1) REPAIR PART.

N:Old ←Yes/No→ New. Q:Old ←No/Yes→ New. R:Old ←Yes/Yes→ New. S:Old ←No/No→ New. W:Add. Z:Discontinued. F:Interchangeable by set. K:Q'ty Change

Copyright (C) YANMAR GLOBAL CS CO., LTD. All RightsReserved.

Fig.7. TURBINE

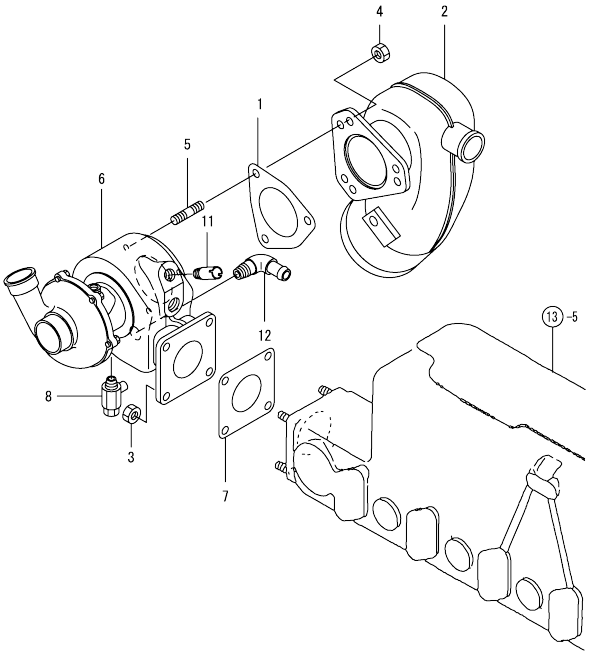

(A)=4TNV84T-BGYM
(B)=
(C)=
(D)=
(E)=
(F)=

No.	Lev.	Parts No.	Description	Q'ty (A)	(B)	(C)	(D)	(E)	(F)	I	R
1	1	129472-13520	GASKET	1							
2	1	129579-13551	ELBOW	1							
3	1	26703-080002	NUT, M8	4							
4	1	26703-080002	NUT, M8	4							
5	1	128170-13600	STUD, M8X31	3							
6	1	129611-18040	TURBINE, RHB31GW	1							
7	1	129792-18091	GASKET	1							
8	1	129670-49290	COCK ASSY, R1/8	1							
11	1	104407-44480	JOINT	1							
12	1	171007-49400	JOINT	1							

N:Old ←Yes/No→ New. Q:Old ←No/Yes→ New. R:Old ←Yes/Yes→ New. S:Old ←No/No→ New. W:Add. Z:Discontinued. F:Interchangeable by set. K:Q'ty Change

Copyright (C) YANMAR GLOBAL CS CO., LTD. All RightsReserved.

Fig.8. CRANKSHAFT & PISTON

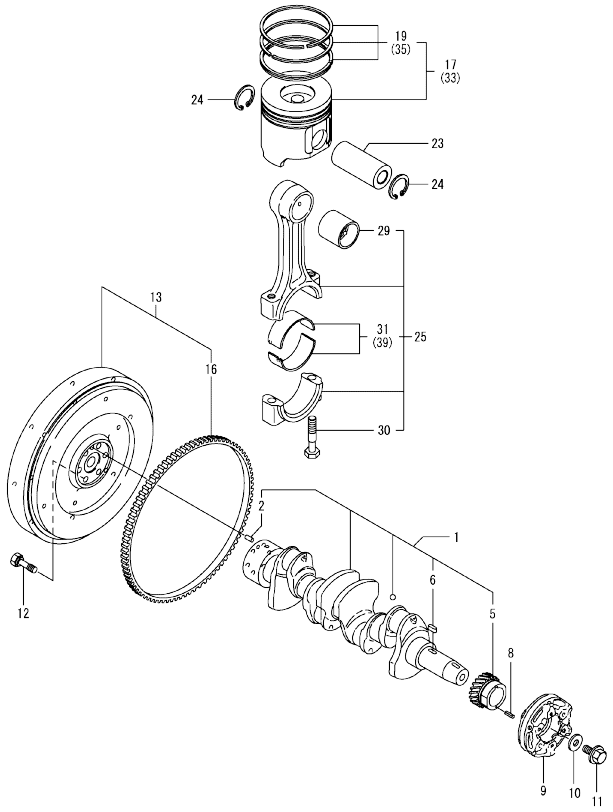

(A)=4TNV84T-BGYM
(B)=
(C)=
(D)=
(E)=
(F)=

No.	Lev.	Parts No.	Description	Q'ty (A)	(B)	(C)	(D)	(E)	(F)	I	R
1	1	129508-21002	CRANKSHAFT ASSY	1							
2	2	129100-01580	PIN, M8X16	1							
5	2	119802-21202	GEAR, CRANKSHAFT	1							
6	2	22512-070140	KEY, 7X 14	1							
8	1	22351-030010	PIN, SPRING 3.0X10	1							
9	1	129579-21651	V-PULLEY	1							
10	1	129795-21661	WASHER	1							
11	1	121850-21680	BOLT	1							
12	1	121111-21501	BOLT, FLYWHEEL	6							
13	1	171487-21590	FLYWHEEL ASSY	1							
16	2	124550-21600	GEAR, RING	1							
17	1	129508-22080	PISTON ASSY	4							
19	2	129004-22500	RING SET, PISTON	4							
23	1	129202-22300	PIN, PISTON D26 L70	4							
24	1	22252-000260	RING, 26	8							
25	1	729402-23100	ROD ASSY, CONNECTING	4							
29	2	129100-23910	BEARING, PISTON PIN	4							1
30	2	121550-23200	BOLT, CONNECTING ROD	8							
31	2	129150-23601	BEARING, CRANK PIN	4							
33	1	129508-22900	PISTON ASSY, 0.25 OS	4							2
35	2	129004-22950	RING SET, 0.25 OS	4							2
39	1	129150-23610	BEARING, 0.25 US	4							3

Remarks
(1) REPAIR PART.
(2) OVER-SIZE(O.S=0.25)PART.
(3) UNDER-SIZE(U.S=0.25)PART.

N:Old $\frac{\text{Yes}}{\text{No}}$ New. Q:Old $\frac{\text{No}}{\text{Yes}}$ New. R:Old $\frac{\text{Yes}}{\text{Yes}}$ New. S:Old $\frac{\text{No}}{\text{No}}$ New. W:Add. Z:Discontinued. F:Interchangeable by set. K:Q'ty Change

Copyright (C) YANMAR GLOBAL CS CO., LTD. All RightsReserved.

Fig.9. LUB.OIL SYSTEM

(A)=4TNV84T-BGYM
(B)=
(C)=
(D)=
(E)=
(F)=

No.	Lev.	Parts No.	Description	Q'ty (A)	(B)	(C)	(D)	(E)	(F)	I	R
1	1	129005-34802	DIPSTICK, OIL	1							
2	1	121520-34810	GUIDE, DIPSTICK	1							
3	1	129150-35042	GASKET	1							
4	1	129150-35091	PIPE ASSY, OIL INLET	1							
8	1	129006-35100	BRACKET ASSY, FILTER	1							
9	2	119802-35110	BRACKET, FILTER	1							
10	2	129417-35150	STUD, L=67	1							
11	1	129150-35111	GASKET	1							
12	1	129150-35170	FILTER,LO	1							1
13	1	129006-44480	JOINT	1							
14	1	129508-49030	PIPE ASSY, WATER	1							
15	2	171008-03990	CLIP, HOSE 18.5	1							
17	2	23080-015000	CLAMP, 15	1							
18	1	129508-49040	PIPE ASSY, WATER	1							
19	2	119940-59130	TUBE, CORRUGATED	1							
21	2	23080-015000	CLAMP, 15	1							
22	2	171008-03990	CLIP, HOSE 18.5	1							
23	1	129466-49300	ELBOW, PT3/8	1							
24	1	26106-080202	BOLT, M8X 20 PLATED	3							
25	1	114250-39450	SWITCH, 0.5KG	1							
26	1	129792-39410	VALVE ASSY, CHECK	4							
32	1	129553-39650	NOZZLE	4							
33	1	22351-030010	PIN, SPRING 3.0X10	4							
34	1	26106-080352	BOLT, M8X 35 PLATED	2							
35	1	129508-33010	COOLER ASSY, OIL	1							
36	2	129508-33050	O-RING	1							
37	1	129417-33110	NUT	1							
38	1	119620-49290	COCK ASSY, 1/4	1							

Remarks
(1) REPAIR PART.

N:Old ◄Yes/No► New. Q:Old ◄No/Yes► New. R:Old ◄Yes/Yes► New. S:Old ◄No/No► New. W:Add. Z:Discontinued. F:Interchangeable by set. K:Q'ty Change

Copyright (C) YANMAR GLOBAL CS CO., LTD. All RightsReserved.

Fig.10. LUB.OIL LINE

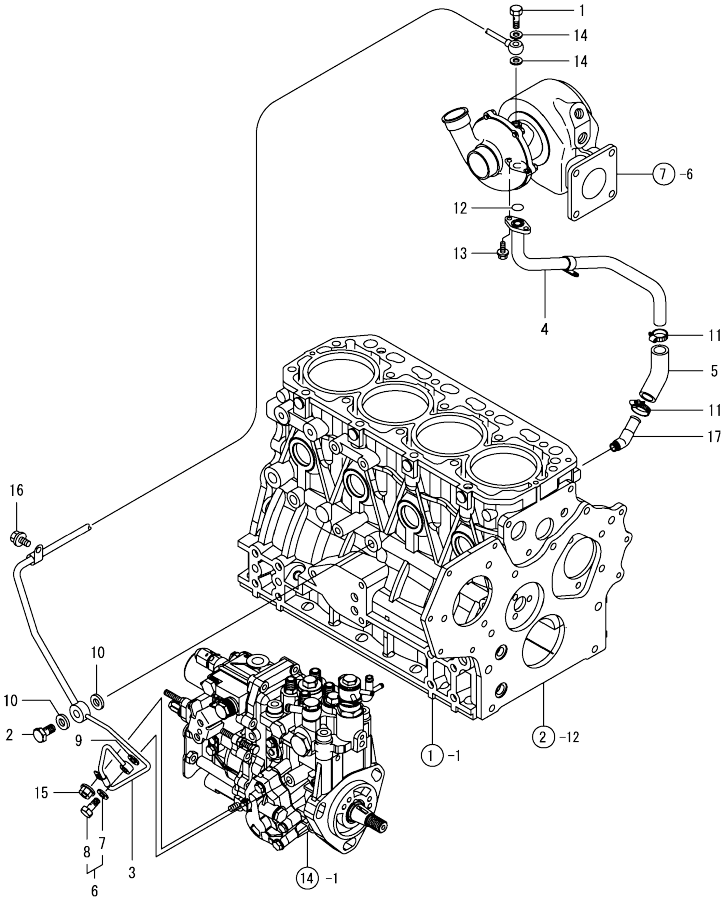

(A)=4TNV84T-BGYM
(B)=
(C)=
(D)=
(E)=
(F)=

No.	Lev.	Parts No.	Description	Q'ty (A)	(B)	(C)	(D)	(E)	(F)	I	R
1	1	105010-39140	BOLT, PIPE JOINT	1							
2	1	124160-39140	BOLT, PIPE JOINT M10	1							
3	1	129649-39450	PIPE ASSY, OIL	1							
4	1	129577-39630	PIPE, OIL	1							
5	1	129403-39610	JOINT, RUBBER	1							
6	1	129005-59830	BOLT ASSY, JOINT M8	1							
7	2	22190-080002	WASHER, SEAL 6	1							
8	2	23857-030000	BOLT, JOINT 3	1							
9	1	22190-080002	WASHER, SEAL 6	1							
10	1	22190-100002	WASHER, SEAL 10	2							
11	1	23000-022000	CLAMP, 22	2							
12	1	24316-000160	O-RING, 4DP16.0	1							
13	1	26106-060162	BOLT, M6X 16 PLATED	2							
14	1	23414-080000	GASKET, 8X1.0	2							
15	1	26366-060002	NUT, M6	1							
16	1	26106-080122	BOLT, M8X 12 PLATED	1							
17	1	128270-13620	JOINT, PIPE PT3/8	1							

N:Old ←Yes/No→ New. Q:Old ←No/Yes→ New. R:Old ←Yes/Yes→ New. S:Old ←No/No→ New. W:Add. Z:Discontinued. F:Interchangeable by set. K:Q'ty Change

Copyright (C) YANMAR GLOBAL CS CO., LTD. All RightsReserved.

Fig.11. COOLING FRESH WATER SYSTEM

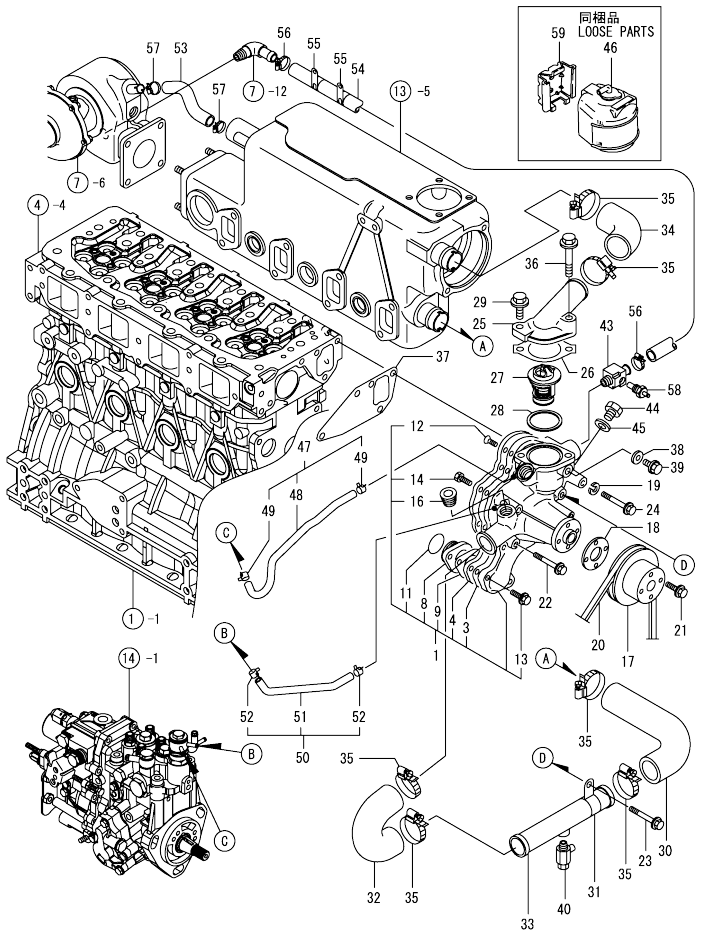

(A)=4TNV84T-BGYM
(B)=
(C)=
(D)=
(E)=
(F)=

No.	Lev.	Parts No.	Description	Q'ty (A)	(B)	(C)	(D)	(E)	(F)	I	R
1	1	129247-42000	PUMP ASSY, WATER	1							
3	2	129150-42059	GASKET	1							
4	2	129263-42120	PLATE	1							
8	2	129150-42300	FLANGE	1							
9	2	129150-42319	GASKET	1							
11	2	129054-42320	O-RING	1							
12	2	26577-060152	SCREW, M6X15	3							
13	2	26106-060202	BOLT, M6X 20 PLATED	2							
14	2	26116-060162	BOLT, M6X 16 PLATED	3							
16	2	129916-49740	PLUG, R03	2							
17	1	129550-42350	V-PULLEY, D=120	1							
18	1	129156-44760	WASHER	1							
19	1	22217-080000	WASHER, SPRING 8	1							
20	1	25132-004400	V-BELT, A44	1							
21	1	26106-060102	BOLT, M6X 10 PLATED	4							
22	1	26106-080552	BOLT, M8X 55 PLATED	2							
23	1	26106-080552	BOLT, M8X 55 PLATED	1							
24	1	26106-080652	BOLT, M8X 65 PLATED	1							
25	1	129470-49540	COVER, THERMOSTAT	1							
26	1	129795-49551	GASKET	1							
27	1	129470-49801	THERMOSTAT, 76.5	1							
28	1	129470-49810	GASKET, THERMOSTAT	1							
29	1	26106-080252	BOLT, M8X 25 PLATED	1							
30	1	129470-49200	JOINT, RUBBER	1							
31	1	129470-49220	RETAINER	1							
32	1	129470-49240	JOINT, RUBBER 28	1							
33	1	129470-49250	PIPE, WATER	1							
34	1	129470-49260	JOINT, RUBBER	1							
35	1	23000-041000	CLAMP, 41	6							
36	1	26106-080352	BOLT, M8X 35 PLATED	1							
37	1	129486-42050	GASKET, WATER PUMP	1							
38	1	23414-080000	GASKET, 8X1.0	1							
39	1	26106-080122	BOLT, M8X 12 PLATED	1							
40	1	129670-49290	COCK ASSY, R1/8	1							
43	1	129473-49310	JOINT, PT3/8-8	1							
44	1	121450-42450	PLUG, M16	1							
45	1	124465-44950	GASKET, 16	1							
46	1	120445-44530	TANK, SUB	1							
47	1	129263-49610	PIPE, WATER	1							
48	2	129263-49710	PIPE, WATER	1							
49	2	124722-59050	CLIP, HOSE 9	2							
50	1	129263-49620	PIPE, WATER	1							
51	2	129263-49720	PIPE, WATER	1							
52	2	124722-59050	CLIP, HOSE 9	2							
53	1	129579-49320	HOSE, RUBBER	1							
54	1	129693-49500	PIPE, WATER	1							
55	1	194440-51620	CLAMP	2							
56	1	23000-013000	CLAMP, 13	2							
57	1	23000-025000	CLAMP, 25	2							
58	1	127610-91350	SWITCH, 95	1							
59	1	120445-44540	SUPPORT	1							

N:Old ←Yes/No→ New. Q:Old ←No/Yes→ New. R:Old ←Yes/Yes→ New. S:Old ←No/No→ New. W:Add. Z:Discontinued. F:Interchangeable by set. K:Q'ty Change

Copyright (C) YANMAR GLOBAL CS CO., LTD. All RightsReserved.

Fig.12. COOLING SEA WATER SYSTEM

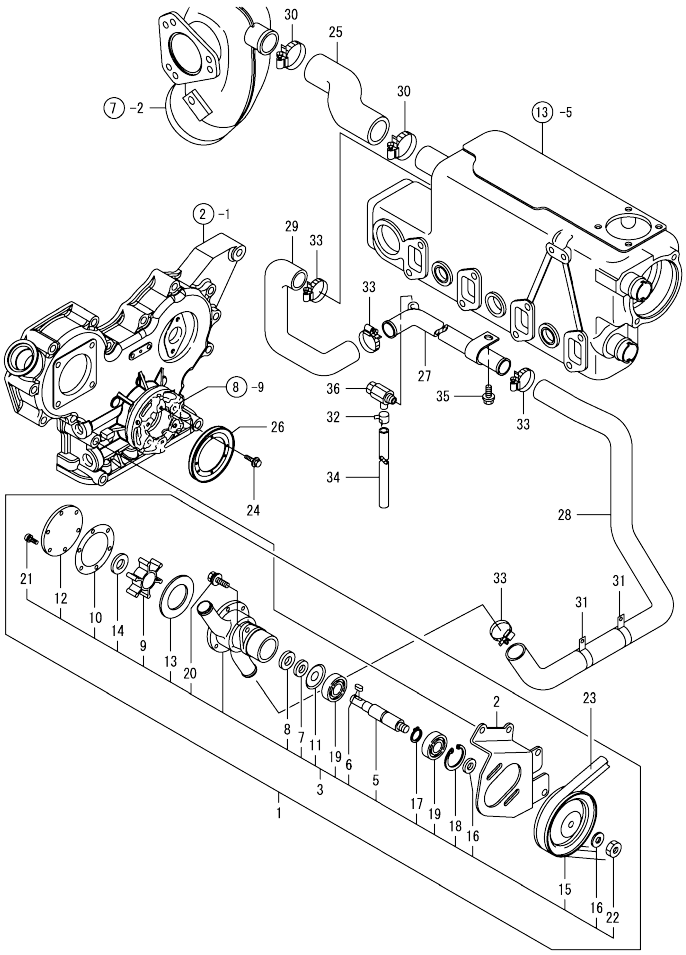

(A)=4TNV84T-BGYM (D)=
(B)= (E)=
(C)= (F)=

No.	Lev.	Parts No.	Description	Q'ty (A)	(B)	(C)	(D)	(E)	(F)	I	R
1	1	129647-42500	PUMP ASSY, WATER	1							
2	2	129647-42150	BRACKET, PUMP	1							
3	2	129579-42502	PUMP ASSY, WATER	1							
5	3	121575-42021	SHAFT, IMPELLER	1							
6	3	124223-42040	KEY	1							
7	3	124223-42070	PIECE	1							
8	3	124223-42080	SEAL, TC13X28X7	1							
9	3	124223-42092	IMPELLER	1							
10	3	124223-42110	GASKET, WATER PUMP	1							
11	3	121575-42120	COVER, BEARING	1							
12	3	121575-42150	COVER	1							
13	3	129579-42160	PLATE	1							
14	3	129579-42190	COVER	1							
15	3	124070-42400	V-PULLEY	1							
16	3	124070-42420	WASHER	2							
17	3	22242-000150	RING, 15	1							
18	3	22252-000350	RING, 35	1							
19	3	24107-062024	BEARING, BALL 6202ZZ	2							
20	3	26014-080162	BOLT, M8X 16	2							
21	3	26113-040088	BOLT, M4X 8	6							
22	3	129579-42590	NUT, M8	1							
23	1	104214-42780	V-BELT, HM30	1							
24	1	26106-060082	BOLT, M6X 8 PLATED	4							
25	1	129472-49040	PIPE, WATER	1							
26	1	104407-21600	V-PULLEY	1							
27	1	129611-49010	PIPE, WATER	1							
28	1	171487-49010	PIPE, WATER	1							
29	1	129475-49020	PIPE, WATER	1							
30	1	23000-035000	CLAMP, 35	2							
31	1	129579-49460	RETAINER, D32	2							
32	1	124460-77680	RETAINER	2							
33	1	23000-035000	CLAMP, 35	4							
34	1	23061-070300	PIPE, 7X 300	2							
35	1	26106-080162	BOLT, M8X 16 PLATED	1							
36	1	129670-49290	COCK ASSY, R1/8	1							

N:Old ←Yes/No→ New. Q:Old ←No/Yes→ New. R:Old ←Yes/Yes→ New. S:Old ←No/No→ New. W:Add. Z:Discontinued. F:Interchangeable by set. K:Q'ty Change

Copyright (C) YANMAR GLOBAL CS CO., LTD. All RightsReserved.

Fig.13. COOLING FRESH WATER COOLER

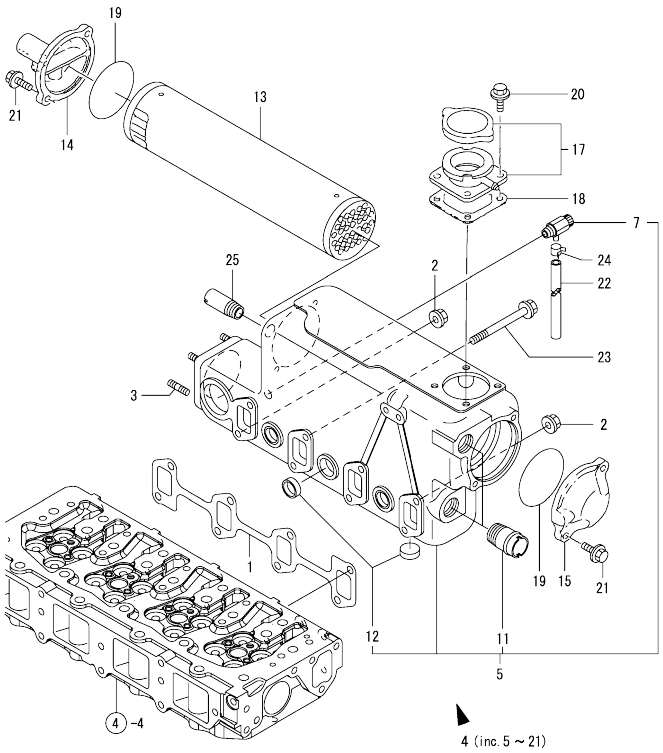

(A)=4TNV84T-BGYM (D)=
(B)= (E)=
(C)= (F)=

No.	Lev.	Parts No.	Description	Q'ty (A)	(B)	(C)	(D)	(E)	(F)	I	R
1	1	129550-13110	GASKET	1							
2	1	26306-080002	NUT, M8	2							
3	1	128170-13600	STUD, M8X31	4							
4	1	129577-44900	COOLER ASSY, WATER	1							
5	2	171487-44000	CORE ASSY, COOLER	1							
7	3	43600-500310	COCK	1							
11	3	124160-49480	JOINT, PIPE	2							
12	3	27241-280000	PLUG, 28	4							
13	2	129473-44111	CORE ASSY, COOLER	1							
14	2	129470-44440	COVER, A	1							
15	2	129470-44450	COVER, B	1							
17	2	129171-44600	FILLER ASSY	1							
18	2	120445-44640	GASKET	1							
19	2	24321-000750	O-RING, 1AG75.0	2							
20	2	26106-080162	BOLT, M8X 16 PLATED	4							
21	2	26106-080252	BOLT, M8X 25 PLATED	4							
22	1	23061-120300	PIPE, 12X 300	1							
23	1	26106-081002	BOLT, M8X100 PLATED	6							
24	1	23080-013000	CLAMP, 13	1							
25	1	104407-44480	JOINT	1							

N:Old ←Yes/No→ New. Q:Old ←No/Yes→ New. R:Old ←Yes/Yes→ New. S:Old ←No/No→ New. W:Add. Z:Discontinued. F:Interchangeable by set. K:Q'ty Change

Copyright (C) YANMAR GLOBAL CS CO., LTD. All RightsReserved.

Fig.14. FUEL INJECTION PUMP

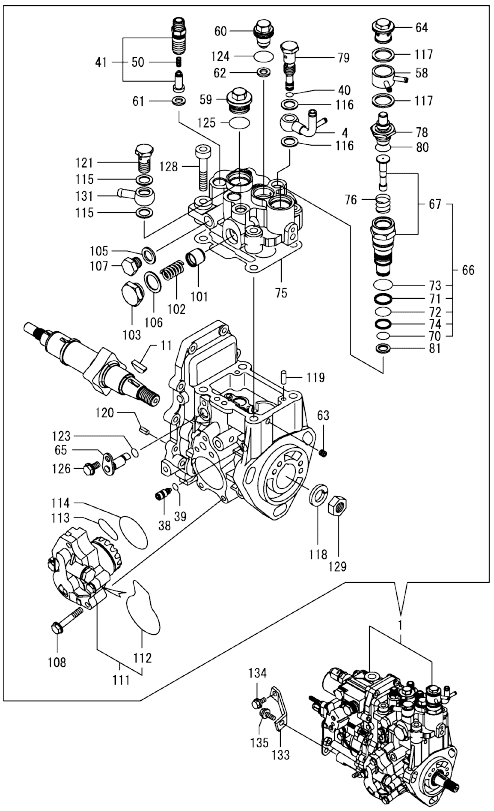

Remarks
(1) GOVERNOR ASSY(FIG.15) IS INCORPORATED IN THIS FOP.CMP (REF.NO.1).

(A)=4TNV84T-BGYM
(B)=
(C)=
(D)=
(E)=
(F)=

No.	Lev.	Parts No.	Description	Q'ty (A)	(B)	(C)	(D)	(E)	(F)	I	R
1	1	729584-51300	PUMP ASSY, INJECTION	1							1
4	2	158552-51670	JOINT, OVER FLOW	1							
11	2	119802-51090	KEY, 4X16	1							
38	2	158600-51270	STOPPER, TAPPET	1							
39	2	158563-51281	O-RING, 4D S6	1							
40	2	158563-51281	O-RING, 4D S6	1							
41	2	129509-51390	VALVE ASSY, DELIVERY	4							
50	3	158563-51330	SPRING, DELIVERY	4							
58	2	158553-51551	JOINT	1							
59	2	158601-51550	PLUG	1							
60	2	119802-51560	PLUG, BARREL	1							
61	2	158552-51571	GASKET	4							
62	2	158552-51571	GASKET	1							
63	2	158557-51570	PLUG	1							
64	2	158601-51570	PLUG	1							
65	2	158552-51580	LIFTER	1							
66	2	119802-51590	TIMER SET	1							
67	3	119802-51600	TIMER ASSY	1							
70	3	158553-51670	O-RING, 1011	1							
71	3	119802-51680	RING, BACK UP	1							
72	3	119802-51690	O-RING	1							
73	3	24356-010200	O-RING, 4D1020	1							
74	3	24372-000150	RING, BACK UP T2P15	1							
75	2	158552-51600	GASKET	1							
76	2	158553-51630	SPRING, TIMER	1							
78	2	158553-51640	ELEMENT	1							
79	2	158601-51650	JOINT, OVER FLOW	1							
80	2	158553-51660	O-RING, P14	1							
81	2	158553-51680	GASKET	1							
101	2	158601-51770	PISTON	1							
102	2	158552-51781	SPRING	1							
103	2	158601-51790	PLUG	1							
105	2	22190-120002	WASHER, SEAL 12	1							
106	2	22190-180002	WASHER, SEAL 18	1							
107	2	23887-120002	PLUG, 12	1							
108	2	158553-51770	BOLT	4							
111	2	158552-52100	PUMP ASSY, FUEL FEED	1							
112	3	158552-52500	O-RING	1							
113	2	158552-52310	O-RING	1							
114	2	158552-52400	O-RING, 4E S42	1							
115	2	22190-120002	WASHER, SEAL 12	2							
116	2	22190-120002	WASHER, SEAL 12	2							
117	2	22190-180002	WASHER, SEAL 18	2							
118	2	22217-140000	WASHER, SPRING 14	1							
119	2	22312-050140	PIN, PARALLEL M5X14	2							
120	2	22351-050010	PIN, SPRING 5.0X10	2							
121	2	23857-060000	BOLT, JOINT 6	1							
123	2	24311-000070	O-RING, 1AP7.0	1							
124	2	24356-010180	O-RING, 4D1018	1							
125	2	24356-010200	O-RING, 4D1020	1							
126	2	26106-060102	BOLT, M6X 10 PLATED	1							

N:Old ←Yes/No→ New. Q:Old ←No/Yes→ New. R:Old ←Yes/Yes→ New. S:Old ←No/No→ New. W:Add. Z:Discontinued. F:Interchangeable by set. K:Q'ty Change

++ CONTINUE ++

Copyright (C) YANMAR GLOBAL CS CO., LTD. All RightsReserved.

Fig.14. FUEL INJECTION PUMP

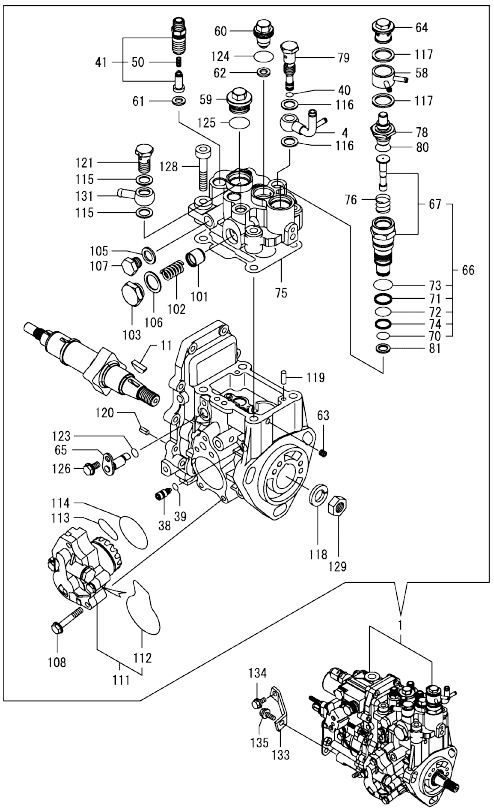

Remarks
(1) GOVERNOR ASSY(FIG.15) IS INCORPORATED IN THIS FOP.CMP (REF.NO.1).

(A)=4TNV84T-BGYM
(B)=
(C)=
(D)=
(E)=
(F)=

No.	Lev.	Parts No.	Description	Q'ty (A)	(B)	(C)	(D)	(E)	(F)	I	R
128	2	26450-080452	BOLT, M8X 45	4							
129	2	26776-140002	NUT, LOCK M14	1							
131	2	129916-59020	JOINT, PIPE 12	1							
133	1	129601-51250	RETAINER, PUMP	1							
134	1	26106-080162	BOLT, M8X 16 PLATED	1							
135	1	26106-080202	BOLT, M8X 20 PLATED	1							

N:Old ←Yes/No→ New. Q:Old ←No/Yes→ New. R:Old ←Yes/Yes→ New. S:Old ←No/No→ New. W:Add. Z:Discontinued. F:Interchangeable by set. K:Q'ty Change

Copyright (C) YANMAR GLOBAL CS CO., LTD. All RightsReserved.

Fig.15. GOVERNOR

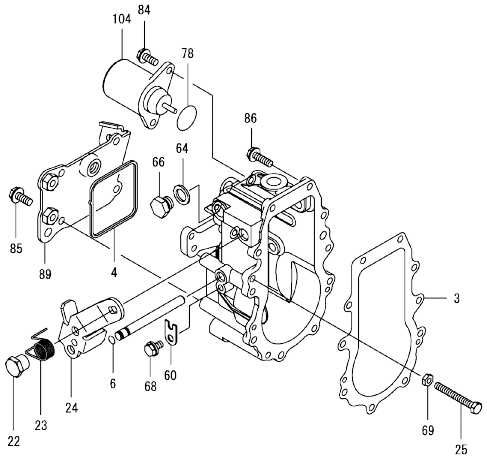

Remarks
* THIS FIGURE(GOVERNOR ASSY)IS INCORPORATED IN THE FUEL INJECTION PUMP ASSY(FIG.14).

(A)=4TNV84T-BGYM (D)=
(B)= (E)=
(C)= (F)=

No.	Lev.	Parts No.	Description	Q'ty (A)	(B)	(C)	(D)	(E)	(F)	I	R
3	2	158553-61050	GASKET	1							
4	2	158553-61070	GASKET	1							
6	2	129155-51280	O-RING, S6	1							
22	2	129255-61410	NUT, LOCK	1							
23	2	119807-61420	SPRING, RETURN	1							
24	2	129246-61441	LEVER, REGULATOR	1							
25	2	129155-61460	BOLT, IDLE	1							
60	2	119660-61901	RETAINER, SHAFT	1							
64	2	22190-120002	WASHER, SEAL 12	1							
66	2	23887-120002	PLUG, 12	1							
68	2	26106-060102	BOLT, M6X 10 PLATED	1							
69	2	26756-060002	NUT, LOCK M6	1							
78	2	158552-61900	O-RING	1							
84	2	26106-060142	BOLT, M6X 14 PLATED	2							
85	2	26106-060142	BOLT, M6X 14 PLATED	4							
86	2	26106-060202	BOLT, M6X 20 PLATED	10							
89	2	129246-61061	COVER, GOVERNOR CASE	1							
104	2	119653-77950	SOLENOID, STOP	1							

N:Old ←Yes/No→ New. Q:Old ←No/Yes→ New. R:Old ←Yes/Yes→ New. S:Old ←No/No→ New. W:Add. Z:Discontinued. F:Interchangeable by set. K:Q'ty Change

Copyright (C) YANMAR GLOBAL CS CO., LTD. All RightsReserved.

Fig.16. FUEL INJECTION VALVE

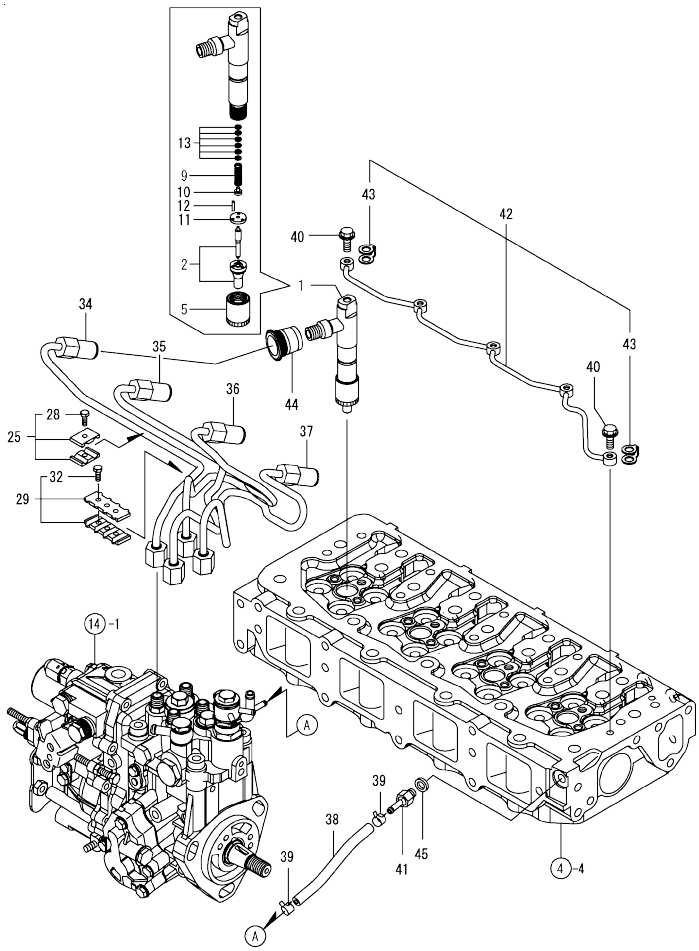

(A)=4TNV84T-BGYM (D)=
(B)= (E)=
(C)= (F)=

No.	Lev.	Parts No.	Description	Q'ty (A)	(B)	(C)	(D)	(E)	(F)	I	R
1	1	729649-53100	VALVE ASSY,INJECTION	4							
2	2	129649-53000	VALVE ASSY,INJECTION	4							
5	2	114250-53080	NUT, NOZZLE D16.95	4							
9	2	114250-53120	SPRING, NOZZLE	4							
10	2	114250-53130	SEAT, SPRING	4							
11	2	114250-53140	PLATE	4							
12	2	114250-53210	PIN	8							
13	2	114250-53400	SHIM SET	4							
25	1	119305-59120	RETAINER, PIPE	2							
28	2	129150-59131	BOLT, M4X14	2							
29	1	129550-59120	RETAINER, PIPE	1							
32	2	129150-59131	BOLT, M4X14	2							
34	1	129508-59910	PIPE ASSY, INJECTION	1							
35	1	129508-59920	PIPE ASSY, INJECTION	1							
36	1	129508-59930	PIPE ASSY, INJECTION	1							
37	1	129508-59940	PIPE ASSY, INJECTION	1							
38	1	129649-59510	PIPE, FUEL	1							
39	1	23000-013000	CLAMP, 13	2							
40	1	123907-59540	BOLT, PIPE JOINT M6	5							
41	1	123907-59560	JOINT	1							
42	1	129508-59550	PIPE ASSY, RETURN	1							
43	2	123907-59550	GASKET	5							
44	1	123907-11601	SEAL	4							
45	1	22190-080002	WASHER, SEAL 6	1							

N:Old ←Yes/No→ New. Q:Old ←No/Yes→ New. R:Old ←Yes/Yes→ New. S:Old ←No/No→ New. W:Add. Z:Discontinued. F:Interchangeable by set. K:Q'ty Change

Copyright (C) YANMAR GLOBAL CS CO., LTD. All RightsReserved.

Fig.17. FUEL LINE

(A)=4TNV84T-BGYM (D)=
(B)= (E)=
(C)= (F)=

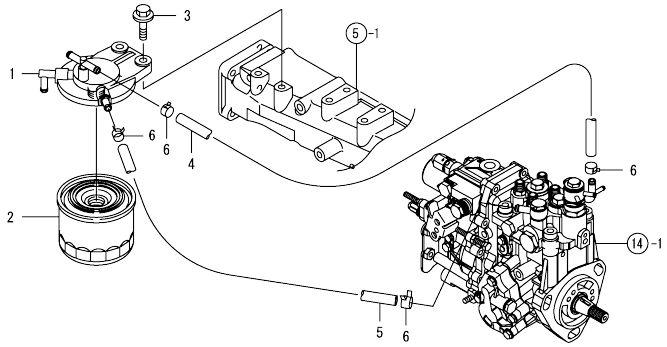

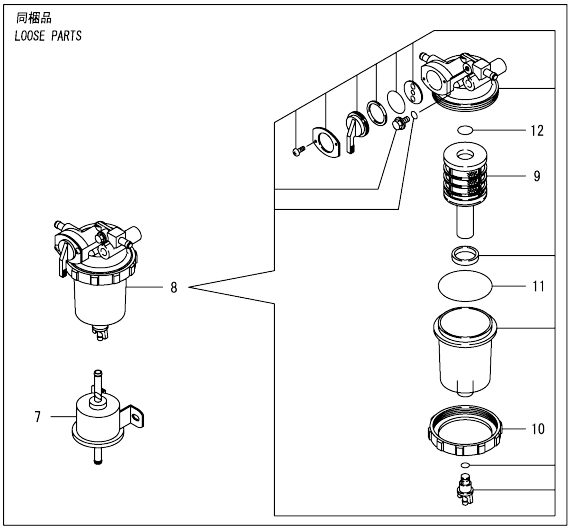

No.	Lev.	Parts No.	Description	Q'ty (A)	(B)	(C)	(D)	(E)	(F)	I	R
1	1	129004-55612	BRACKET, FILTER	1							
2	1	119802-55810	FILTER,FO	1							
3	1	26106-080302	BOLT, M8X 30 PLATED	2							
4	1	129649-59010	PIPE, FUEL RETURN	1							
5	1	128370-59102	PIPE, FUEL	1							
6	1	23000-016000	CLAMP, 16	4							
7	1	119225-52102	PUMP ASSY, FUEL FEED	1							
8	1	119802-55700	SEPARATOR ASSY	1							
9	2	119802-55710	ELEMENT	1							
10	2	129100-55690	RING, RETAINING	1							
11	2	24321-000650	O-RING, 1AG65.0	1							
12	2	24311-000160	O-RING, 1AP16.0	1							

N:Old ←Yes/No→ New. Q:Old ←No/Yes→ New. R:Old ←Yes/Yes→ New. S:Old ←No/No→ New. W:Add. Z:Discontinued. F:Interchangeable by set. K:Q'ty Change

Copyright (C) YANMAR GLOBAL CS CO., LTD. All RightsReserved.

Fig.18. STARTING MOTOR

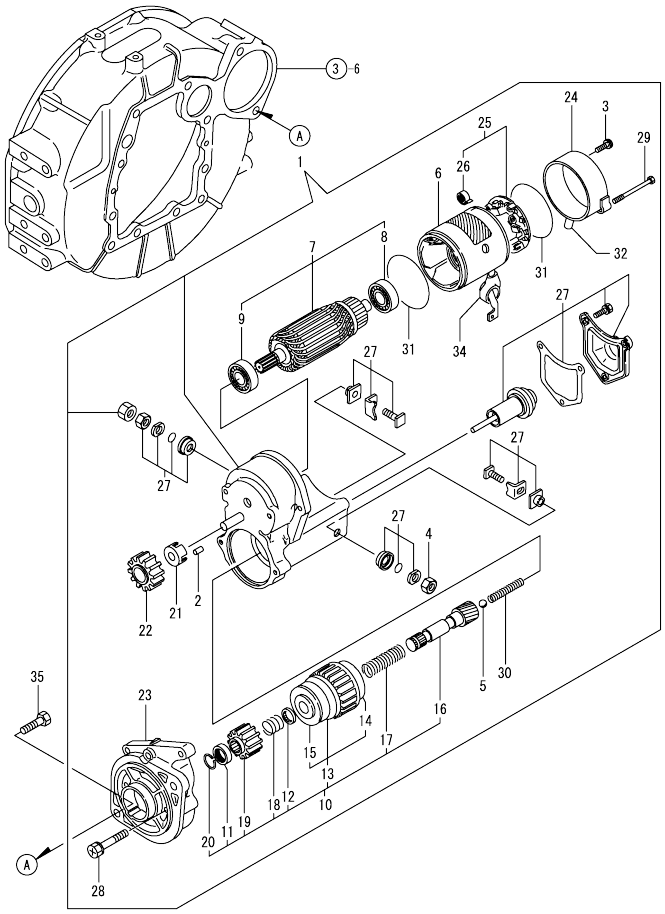

(A)=4TNV84T-BGYM
(B)=
(C)=
(D)=
(E)=
(F)=

No.	Lev.	Parts No.	Description	Q'ty (A)	(B)	(C)	(D)	(E)	(F)	I	R
1	1	129407-77010	STARTER, RA1.4	1							
2	2	X0283060061	ROLLER	5							
3	2	129129-77460	SCREW	2							
4	2	X9490561370	NUT	1							
5	2	X9491200240	BALL	1							
6	2	129407-77210	YOKE ASSY	1							
7	2	129407-77220	ARMATURE ASSY	1							
8	3	129129-77230	BEARING	1							
9	3	129129-77240	BEARING	1							
10	2	129407-77250	STARTER	1							
11	3	X0280210230	NUT	1							
12	3	X0283270140	RETAINER	1							
13	3	129407-77390	CLUTCH ASSY	1							
14	4	129129-77440	BEARING, BALL	1							
15	4	129129-77450	BEARING, BALL	1							
16	3	129129-77400	SHAFT	1							
17	3	129129-77410	SPRING, COIL	1							
18	3	129407-77410	SPRING	1							
19	3	129129-77420	PINION, STARTER	1							
20	3	129129-77430	RING	1							
21	2	129129-77260	RETAINER	1							
22	2	129129-77270	PINION	1							
23	2	129407-77280	HOUSING	1							
24	2	129129-77290	FRAME	1							
25	2	129407-77300	HOLDER ASSY	1							
26	3	X9491730461	SPRING	4							
27	2	129407-77310	SWITCH ASSY	1							
28	2	129129-77320	BOLT	2							
29	2	129407-77330	BOLT	2							
30	2	129129-77340	SPRING	1							
31	2	129129-77350	O-RING	2							
32	2	129129-77362	COVER	1							
34	2	129129-77380	CAP	1							
35	1	26116-120252	BOLT, M12X 25 PLATED	2							

N:Old ←Yes/No→ New. Q:Old ←No/Yes→ New. R:Old ←Yes/Yes→ New. S:Old ←No/No→ New. W:Add. Z:Discontinued. F:Interchangeable by set. K:Q'ty Change

Copyright (C) YANMAR GLOBAL CS CO., LTD. All RightsReserved.

Fig.19. GENERATOR

(A)=4TNV84T-BGYM
(B)=
(C)=
(D)=
(E)=
(F)=

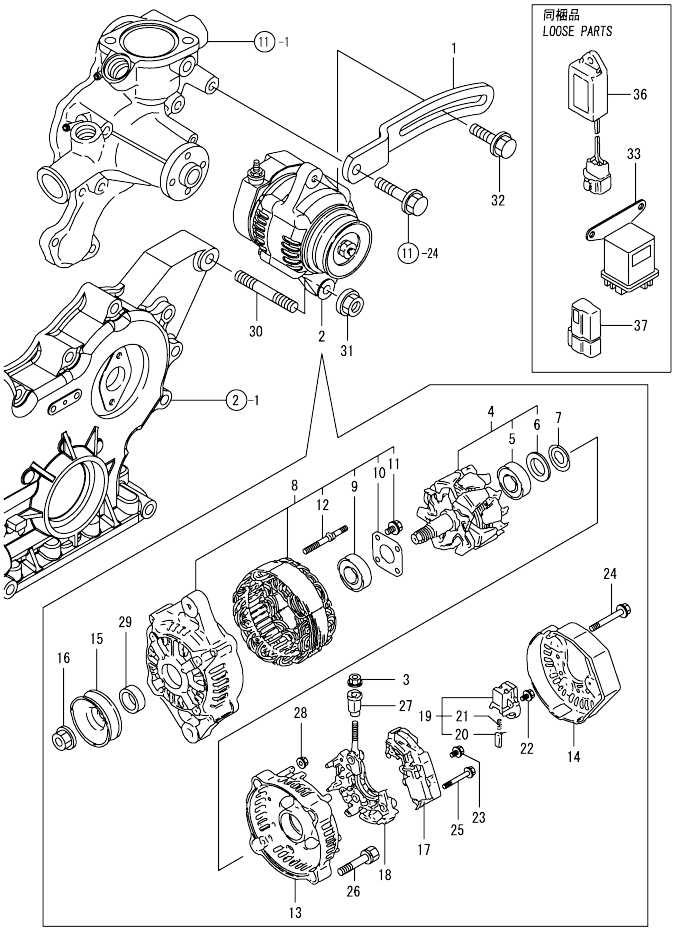

No.	Lev.	Parts No.	Description	Q'ty (A)	(B)	(C)	(D)	(E)	(F)	I	R
1	1	129410-77330	ADJUSTER	1							
2	1	129423-77200	GENERATOR, 12V-40A	1							
3	2	X9490561001	NUT	1							
4	2	119620-77380	ROTOR ASSY	1							
5	3	123501-79240	BEARING, BALL	1							
6	3	119620-79250	COVER	1							
7	2	119620-79360	WASHER, THRUST	1							
8	2	119620-77421	FRAME ASSY, DRIVE	1							
9	3	119620-79200	BEARING, BALL	1							
10	3	119620-79210	PLATE, RETAINER	1							
11	3	119620-79220	SCREW	4							
12	3	119620-79230	STUD	2							
13	2	119620-77440	FRAME ASSY	1							
14	2	129423-77450	COVER	1							
15	2	119620-77461	PULLEY	1							
16	2	119620-77471	NUT	1							
17	2	129423-77710	REGULATOR ASSY	1							
18	2	119620-79260	HOLDER	1							
19	2	129052-79270	HOLDER, BRUSH	1							
20	3	119620-77480	BRUSH ASSY	2							
21	3	119620-79280	SPRING	2							
22	2	119620-79290	SCREW	1							
23	2	119620-79300	SCREW	1							
24	2	119620-79310	BOLT	3							
25	2	119620-79320	SCREW	2							
26	2	119620-79330	BOLT	2							
27	2	119620-79340	BUSH, INSULATION	1							
28	2	119620-79350	NUT	2							
29	2	119620-77490	COLLAR	1							
30	1	129795-01900	STUD	1							
31	1	26306-100002	NUT, M10	1							
32	1	26106-080452	BOLT, M8X 45 PLATED	1							
33	1	119650-77910	RELAY ASSY, GLOW	1							
36	1	129211-77920	TIMER	1							
37	1	119643-66900	DIODE	1							

N:Old ←Yes/No→ New. Q:Old ←No/Yes→ New. R:Old ←Yes/Yes→ New. S:Old ←No/No→ New. W:Add. Z:Discontinued. F:Interchangeable by set. K:Q'ty Change

Copyright (C) YANMAR GLOBAL CS CO., LTD. All RightsReserved.

Fig.20. GASKET SET

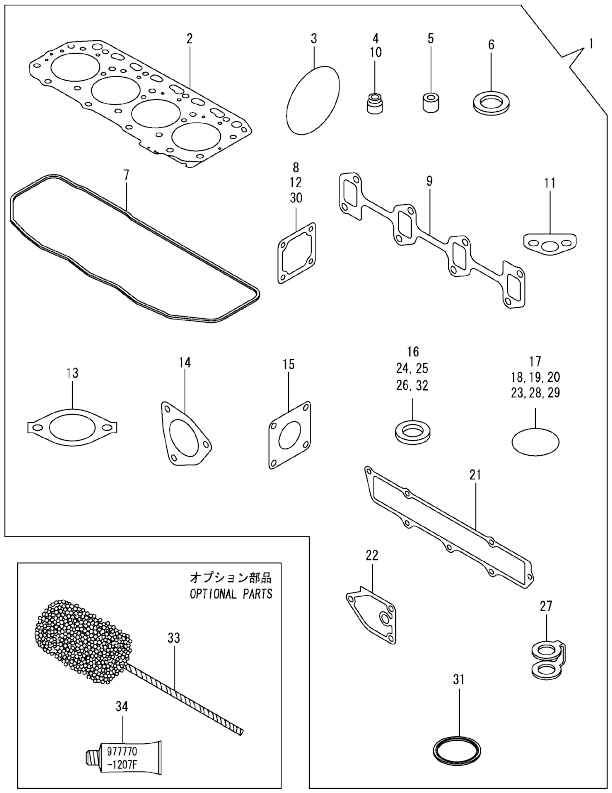

(A)=4TNV84T-BGYM (D)=
(B)= (E)=
(C)= (F)=

No.	Lev.	Parts No.	Description	Q'ty (A)	(B)	(C)	(D)	(E)	(F)	I	R
1	1	729508-92690	GASKET SET	1							1
2	2	129508-01330	GASKET, HEAD	1							
3	2	121850-51960	O-RING	1							
4	2	119717-11340	SEAL, VALVE STEM	8							
5	2	119802-11870	PROTECTOR, NOZZLE	4							
6	2	119625-11880	SEAT, NOZZLE	4							
7	2	129508-11310	GASKET, BONNET	1							
8	2	129150-77511	GASKET	1							
9	2	129550-13110	GASKET	1							
10	2	119717-11350	SEAL, VALVE STEM	8							
11	2	129150-35042	GASKET	1							
12	2	129100-77510	GASKET	1							
13	2	129795-49551	GASKET	1							
14	2	129472-13520	GASKET	1							
15	2	129792-18091	GASKET	1							
16	2	22190-080002	WASHER, SEAL 6	3							
17	2	24311-000120	O-RING, 1AP12.0	3							
18	2	24311-000320	O-RING, 1AP32.0	2							
19	2	24341-000240	O-RING, 1AS24.0	1							
20	2	24316-000160	O-RING, 4DP16.0	1							
21	2	129508-12110	GASKET, MANIFOLD	1							
22	2	129150-35111	GASKET	1							
23	2	119609-32040	O-RING, P16	4							
24	2	22190-100002	WASHER, SEAL 10	2							
25	2	23414-080000	GASKET, 8X1.0	3							
26	2	22190-220002	WASHER, SEAL 22	1							
27	2	123907-59550	GASKET	5							
28	2	24341-000400	O-RING, 1AS40.0	1							
29	2	24321-000750	O-RING, 1AG75.0	2							
30	2	120445-44640	GASKET	1							
31	2	129470-49810	GASKET, THERMOSTAT	1							
32	2	124465-44950	GASKET, 16	1							
33	1	129400-92420	HONE	1							1
34	1	977770-1207F	GASKET.LIQUID	1							1

Remarks
(1) OPTIONAL PARTS.

N:Old ←Yes/No→ New. Q:Old ←No/Yes→ New. R:Old ←Yes/Yes→ New. S:Old ←No/No→ New. W:Add. Z:Discontinued. F:Interchangeable by set. K:Q'ty Change

Copyright (C) YANMAR GLOBAL CS CO., LTD. All RightsReserved.

Parts No. Index

Parts No.	Fig. No.	Ref. No.
104214-42780	12	23
104407-21600	12	26
104407-44480	7	11
	13	25
105010-39140	10	1
114250-39450	9	25
114250-53080	16	5
114250-53120	16	9
114250-53130	16	10
114250-53140	16	11
114250-53210	16	12
114250-53400	16	13
119225-52102	17	7
119305-59120	16	25
119609-32040	2	17
	20	23
119620-01750	3	20
119620-49290	9	38
119620-77380	19	4
119620-77421	19	8
119620-77440	19	13
119620-77461	19	15
119620-77471	19	16
119620-77480	19	20
119620-77490	19	29
119620-79200	19	9
119620-79210	19	10
119620-79220	19	11
119620-79230	19	12
119620-79250	19	6
119620-79260	19	18
119620-79280	19	21
119620-79290	19	22
119620-79300	19	23
119620-79310	19	24
119620-79320	19	25
119620-79330	19	26
119620-79340	19	27
119620-79350	19	28
119620-79360	19	7
119625-11880	4	43
	20	6
119640-01640	3	10
119640-61400	4	64
119643-66900	19	37
119650-77910	19	33
119653-77950	15	104
119660-61901	15	60
119717-11190	4	33
119717-11340	4	34

Parts No.	Fig. No.	Ref. No.
119717-11340	20	4
119717-11350	4	35
	20	10
119717-11800	4	41
119802-01520	2	12
119802-01561	2	13
119802-03070	4	53
119802-11870	4	42
	20	5
119802-21202	8	5
119802-25051	6	9
119802-25070	6	13
119802-25101	6	10
119802-25901	6	15
119802-32070	2	8
119802-32100	2	7
119802-32130	2	20
119802-35110	9	9
119802-51090	14	11
119802-51560	14	60
119802-51590	14	66
119802-51600	14	67
119802-51680	14	71
119802-51690	14	72
119802-55700	17	8
119802-55710	17	9
119802-55810	17	2
119807-61420	15	23
119940-59130	9	19
120445-44530	11	46
120445-44540	11	59
120445-44640	13	18
	20	30
121023-01551	2	28
121111-21501	8	12
121450-42450	11	44
121520-34810	9	2
121550-23200	8	30
121575-42021	12	5
121575-42120	12	11
121575-42150	12	12
121850-21680	8	11
121850-51960	2	21
	20	3
123501-79240	19	5
123907-03100	4	56
123907-03110	4	57
123907-03120	4	58
123907-03140	4	59
123907-11550	4	20

Parts No.	Fig. No.	Ref. No.
123907-11601	16	44
123907-11830	4	39
123907-59540	16	40
123907-59550	16	43
	20	27
123907-59560	16	41
124060-01050	1	11
124070-42400	12	15
124070-42420	12	16
124160-01751	2	14
	4	50
124160-01910	1	12
		13
124160-11360	4	68
124160-39140	10	2
124160-49480	13	11
124223-42040	12	6
124223-42070	12	7
124223-42080	12	8
124223-42092	12	9
124223-42110	12	10
124240-01871	2	15
124460-77680	12	32
124465-44950	11	45
	20	32
124550-21600	8	16
124722-59050	11	49
		52
124770-12540	5	13
127610-91350	11	58
128170-13600	7	5
	13	3
128270-13620	10	17
128370-59102	17	5
129001-01250	1	4
129001-02931	1	29
129001-11340	4	62
129001-32330	2	11
129004-22500	8	19
129004-22950	8	35
129004-55612	17	1
129005-34802	9	1
129005-59830	10	6
129006-35100	9	8
129006-44480	9	13
129009-11340	4	63
129052-79270	19	19
129054-42320	11	11
129100-01580	3	1
		16

Parts No.	Fig. No.	Ref. No.
129100-01580	8	2
129100-01640	3	17
129100-23910	8	29
129100-55690	17	10
129100-77501	5	15
129100-77510	5	16
	20	12
129129-77230	18	8
129129-77240	18	9
129129-77260	18	21
129129-77270	18	22
129129-77290	18	24
129129-77320	18	28
129129-77340	18	30
129129-77350	18	31
129129-77362	18	32
129129-77380	18	34
129129-77400	18	16
129129-77410	18	17
129129-77420	18	19
129129-77430	18	20
129129-77440	18	14
129129-77450	18	15
129129-77460	18	3
129150-01200	1	27
129150-02020	1	6
129150-02450	6	4
129150-02871	1	32
129150-02931	1	24
129150-02941	1	35
129150-03070	4	54
129150-11230	4	11
		15
129150-11750	4	13
		17
		38
129150-14101	6	7
129150-14200	6	1
129150-14400	6	2
129150-23601	8	31
129150-23610	8	39
129150-25301	6	16
129150-35042	9	3
	20	11
129150-35091	9	4
129150-35111	9	11
	20	22
129150-35170	9	12
129150-42059	11	3
129150-42300	11	8

Parts No. Index

Parts No.	Fig. No.	Ref. No.
129150-42319	11	9
129150-59131	16	28
		32
129150-77511	5	7
	20	8
129155-51280	15	6
129155-61460	15	25
129156-44760	11	18
129171-44600	13	17
129202-22300	8	23
129211-77920	19	36
129246-61061	15	89
129246-61441	15	24
129247-42000	11	1
129255-61410	15	22
129263-42120	11	4
129263-49610	11	47
129263-49620	11	50
129263-49710	11	48
129263-49720	11	51
129301-03660	4	73
129400-01730	3	7
129400-92420	20	33
129403-39610	10	5
129407-77010	18	1
129407-77210	18	6
129407-77220	18	7
129407-77250	18	10
129407-77280	18	23
129407-77300	18	25
129407-77310	18	27
129407-77330	18	29
129407-77390	18	13
129407-77410	18	18
129410-03990	4	74
129410-77330	19	1
129417-33110	9	37
129417-35150	9	10
129418-32320	2	10
129423-77200	19	2
129423-77450	19	14
129423-77710	19	17
129466-49300	9	23
129470-07230	4	1
129470-44440	13	14
129470-44450	13	15
129470-49200	11	30
129470-49220	11	31
129470-49240	11	32
129470-49250	11	33

Parts No.	Fig. No.	Ref. No.
129470-49260	11	34
129470-49540	11	25
129470-49801	11	27
129470-49810	11	28
	20	31
129472-13520	7	1
	20	14
129472-49040	12	25
129473-44111	13	13
129473-49310	11	43
129475-49020	12	29
129477-12500	5	10
129477-12530	5	12
129486-01670	3	2
129486-42050	11	37
129508-01330	1	28
	20	2
129508-03010	4	52
129508-11100	4	29
129508-11110	4	30
129508-11130	4	31
129508-11180	4	32
129508-11241	4	4
129508-11250	4	5
129508-11260	4	7
129508-11270	4	8
129508-11280	4	9
129508-11310	4	61
	20	7
129508-11650	4	10
129508-11660	4	14
129508-11820	4	40
129508-11900	4	44
129508-11920	4	18
129508-12100	5	1
129508-12110	5	3
	20	21
129508-14580	6	3
129508-21002	8	1
129508-22080	8	17
129508-22900	8	33
129508-32111	2	18
129508-32120	2	19
129508-33010	9	35
129508-33050	9	36
129508-49030	9	14
129508-49040	9	18
129508-59550	16	42
129508-59910	16	34
129508-59920	16	35

Parts No.	Fig. No.	Ref. No.
129508-59930	16	36
129508-59940	16	37
129509-11700	4	21
129509-51390	14	41
129550-13110	13	1
	20	9
129550-42350	11	17
129550-59120	16	29
129553-39650	9	32
129577-39630	10	4
129577-44900	13	4
129579-13551	7	2
129579-21651	8	9
129579-42160	12	13
129579-42190	12	14
129579-42502	12	3
129579-42590	12	22
129579-49320	11	53
129579-49460	12	31
129584-03010	4	71
129584-11350	4	51
129601-51250	14	133
129611-18040	7	6
129611-49010	12	27
129647-42150	12	2
129647-42500	12	1
129649-12811	5	20
129649-12821	5	21
129649-12832	5	22
129649-12851	5	19
129649-39450	10	3
129649-53000	16	2
129649-59010	17	4
129649-59510	16	38
129670-49290	7	8
	11	40
	12	36
129672-11510	4	36
129693-49500	11	54
129792-18091	7	7
	20	15
129792-39410	9	26
129795-01780	3	19
129795-01800	2	6
129795-01900	19	30
129795-01950	2	16
129795-02412	1	9
129795-21661	8	10
129795-49551	11	26
	20	13

Parts No.	Fig. No.	Ref. No.
129900-07900	4	2
129900-32130	2	9
129907-03070	4	55
129907-11950	4	45
129916-49740	11	16
129916-59020	14	131
158552-51151	6	18
158552-51571	14	61
		62
158552-51580	14	65
158552-51600	14	75
158552-51670	14	4
158552-51781	14	102
158552-52100	14	111
158552-52310	14	113
158552-52400	14	114
158552-52500	14	112
158552-61900	15	78
158553-51551	14	58
158553-51630	14	76
158553-51640	14	78
158553-51660	14	80
158553-51670	14	70
158553-51680	14	81
158553-51770	14	108
158553-61050	15	3
158553-61070	15	4
158557-51570	14	63
158563-51281	14	39
		40
158563-51330	14	50
158600-51270	14	38
158601-51550	14	59
158601-51570	14	64
158601-51650	14	79
158601-51770	14	101
158601-51790	14	103
171007-49400	7	12
171008-03990	9	15
		22
171051-01921	1	5
171340-77520	5	17
171487-01600	3	5
171487-21590	8	13
171487-44000	13	5
171487-49010	12	28
194440-51620	11	55
22190-080002	10	7
		9
	16	45

Parts No. Index

Parts No.	Fig. No.	Ref. No.
22190-080002	20	16
22190-100002	10	10
	20	24
22190-120002	14	105
		115
		116
	15	64
22190-180002	14	106
		117
22190-220002	3	12
	20	26
22217-080000	11	19
22217-140000	6	19
	14	118
22242-000150	12	17
22252-000260	8	24
22252-000350	12	18
22312-050140	14	119
22351-030010	8	8
	9	33
22351-050010	14	120
22351-060012	4	46
22512-070140	6	8
	8	6
22857-500100	4	65
		66
		67
23000-013000	11	56
	16	39
23000-016000	17	6
23000-022000	10	11
23000-025000	11	57
23000-035000	12	30
		33
23000-041000	11	35
23000-048000	5	14
		18
23000-054000	5	23
23000-060000	5	6
23061-070300	12	34
23061-120300	13	22
23080-013000	13	24
23080-015000	9	17
		21
23414-080000	10	14
	11	38
	20	25
23857-030000	10	8
23857-060000	14	121
23876-020000	4	27

Parts No.	Fig. No.	Ref. No.
23876-030000	2	4
23876-040000	2	5
23887-120002	14	107
	15	66
24107-062024	12	19
24311-000070	14	123
24311-000120	4	47
		69
	20	17
24311-000160	17	12
24311-000320	2	23
	4	70
	20	18
24316-000160	10	12
	20	20
24321-000650	17	11
24321-000750	13	19
	20	29
24341-000240	2	29
	20	19
24341-000400	20	28
24356-010180	14	124
24356-010200	14	73
		125
24372-000150	14	74
25132-004400	11	20
26014-080162	12	20
26106-060082	12	24
26106-060102	11	21
	14	126
	15	68
26106-060142	15	84
		85
26106-060162	2	30
	10	13
26106-060202	11	13
	15	86
26106-080122	10	16
	11	39
26106-080142	6	17
26106-080162	2	24
		25
	3	13
	4	3
	12	35
	13	20
	14	134
26106-080202	5	4
	9	24
	14	135

Parts No.	Fig. No.	Ref. No.
26106-080252	3	14
	4	48
	11	29
	13	21
26106-080302	17	3
26106-080352	3	3
	9	34
	11	36
26106-080402	5	8
	6	14
26106-080452	3	15
	19	32
26106-080502	3	21
	4	49
26106-080552	2	26
	11	22
		23
26106-080652	11	24
26106-080802	5	5
		9
26106-080852	2	22
26106-081002	13	23
26113-040088	12	21
26116-060162	11	14
26116-120252	18	35
26206-100252	3	4
26206-100302	3	6
26226-080352	4	19
26306-080002	2	27
	13	2
26306-100002	19	31
26366-060002	10	15
26450-080452	14	128
26577-060152	11	12
26703-080002	7	3
		4
26756-060002	15	69
26776-140002	6	20
	14	129
27241-120000	1	14
27241-280000	13	12
27241-300000	1	10
27241-400000	4	28
43600-500310	13	7
729402-23100	8	25
729508-01500	2	1
729508-01560	1	1
729508-92690	20	1
729577-01720	3	9
729584-51300	14	1

Parts No.	Fig. No.	Ref. No.
729649-53100	16	1
977770-1207F	20	34
X0280210230	18	11
X0283060061	18	2
X0283270140	18	12
X9490561001	19	3
X9490561370	18	4
X9491200240	18	5
X9491730461	18	26