YANMAR

# PARTS CATALOG

0CW10-M48901EN

Last update Mar., 2013

# PREFACE

1. This parts catalog is the 2nd edition of 4TNV84T-BPCU for CUMMINS POWER GENERATION.

Pub.No. : 0CW10-G48901
Published : June, 2009

2. Model name

| Engine model | Vehicle | Vehicle made by |
|---|---|---|
| 4TNV84T-BPCU | GENERATOR | CUMMINS POWER GENERATION |

## Directions for the Parts Catalog.

**1.The parts stipulated in this Parts Catalog are not necessarily standard equipped parts.**
**2.Parts may change without prior notice.**
**3.The following is an example of the Parts Catalog format.**

0CF10-G21601 29. FUEL INJECTION PUMP(W/BOOST)

(A)=4JH-DT
(B)=4JH-DTZ
(C)=4JH-DTZP
(D)=4JH-DTZA
(E)=4JH-DTZY
(F)=

| ① REF. | ② LEV. | PARTS NO. | DESCRIPTION | Q'TY (A) | (B) | (C) | (D) | (E) | (F) | ③ I | ⑤ R |
|---|---|---|---|---|---|---|---|---|---|---|---|
| 1 | 1 | 729595-51390 | FUEL INJECTION PUMP | 1 | 1 | 1 | 1 | 1 | | | 1 |
| 1-1 | 1 | 729595-51391 | FUEL INJECTION PUMP | 1 | 1 | 1 | 1 | 1 | | N | 1 |
| | (A=E00185) | (B=E00200) | | | | | | | | | |
| 3 | 2 | 26022-060162 | SCREW M 6X 16 | 9 | 9 | 9 | 9 | 9 | | | |
| 3-1 ④ | 2 | 26022-060162 | SCREW M 6X 16 | 4 | 4 | 4 | 4 | 4 | | K | |
| | (A=E00156) | (B=E00156) | (C=E00156) (D=E00156) | (E=E00156) | | | | | | | |
| 4 | 2 | 129470-51040 | CAMSHAFT | 1 | 1 | 1 | 1 | 1 | | | |
| 5 | 2 | 122710-51050 | BEARING, ROLLER | 2 | 2 | 2 | 2 | 2 | | | |
| 6 | 2 | 129470-51060 | RETAINER | 1 | 1 | 1 | 1 | 1 | | | |

Remarks
(1) BOOST COMPEMSATOR TYPE. OPTIONAL
PART, TO E00155,(4JH-DT, 4JH-DTZ

### ① Ref. No.

The Ref. No. listed may not be in accordance with the illustration Ref. No.

(Ex.) Illustration No. 1 List Ref No. 1 (Before change) → 1- 1 (After change)

For interchangeable symbols N, R and K, illustrations for new parts may be abbreviated.

### ② Lev. (Level)

Level indication
The numbers below indicate the level of relativity towards the main part.
1 ----- Main parts (Assembly parts)
2 ----- Sub component included in " 1 ".
3 ----- Sub component included in " 2 ".
Note) Parts that are not for sale are partially illustrated but not listed.

### ③ Interchangeability Mark

When a part change takes place, one of the following interchangeability symbols is indicated beside the part.

| Symbol | Interchangeability | Contents note |
|---|---|---|
| N | Old ← Yes / No → New | New Part is interchangeable for Old Part but Old Part is not interchangeable for New Part. |
| Q | Old ← No / Yes → New | New Part is not interchangeable for Old Part but Old Part is interchangeable for New Part. |
| R | Old ← Yes / Yes → New | New/ Old Parts are both interchangeable. |
| S | Old ← No / No → New | New/ Old Parts are both not interchangeable. |
| W | | Part newly added. |
| Z | | Part discontinued. |
| F | | Not interchangeable by a single part but interchangeable together with related parts. |
| K | | Changes only for used parts quantities. |

### ④ Effective Machine No.

When a part changes, the effective Machine No. will be indicated in the (A)-(F) column.

| Product Symbol | Product No. | Product Symbol | Product No. |
|---|---|---|---|
| C | Clutch No. Compressor No. | F | Machine No. (Agricultural Equip.) |
| D | Drive No. | M | Machine No. |
| E | Engine No. | | |

Note 1) A date may follow the symbol. (Ex.) 1996.01
Note 2) " XXXXX " and " ZZZZZ " are for parts that could not be predicted or for engine models that could not be identified.
Note 3) (A=E00185) is the E (Engine Serial Number) for the column (A) model (in this case 4JH-DT) after the parts design change.

### ⑤ Remarks Mark

Figures or alphabets (symbols) are entered in the remarks column.
The comments (remarks) on parts that are indicated at the bottom of the illustration are the same symbols as those stated above.

# Contents

0CW10-M48901


| Fig. No. | Fig. Name |
|---|---|
| 4TNV84T-BPCU | |
| 1. | CYLINDER BLOCK |
| 2. | GEAR HOUSING |
| 3. | OIL SUMP |
| 4. | CYLINDER HEAD & BONNET |
| 5. | SUCTION MANIFOLD & AIR CLEANER |
| 6. | EXHAUST MANIFOLD |
| 7. | CAMSHAFT & DRIVING GEAR |
| 8. | TURBINE |
| 9. | CRANKSHAFT & PISTON |
| 10. | LUB.OIL SYSTEM |
| 11. | LUB.OIL LINE |
| 12. | COOLING WATER SYSTEM |
| 13. | FUEL INJECTION PUMP |
| 14. | GOVERNOR |
| 15. | FUEL INJECTION VALVE |
| 16. | GASKET SET |
| 17. | FUEL LINE |

# Fig.1. CYLINDER BLOCK

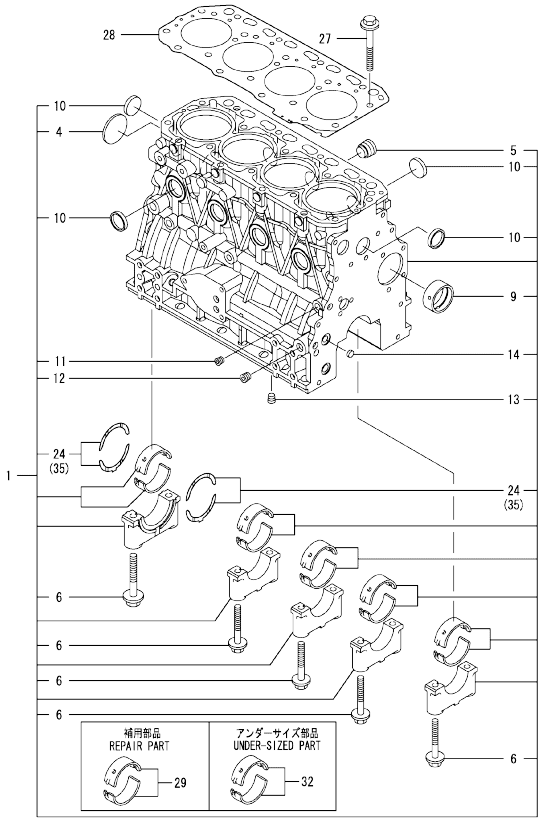


Remarks
(1) REPAIR PART.
(2) UNDER-SIZED(U.S=0.25)PART.
(3) OVER-SIZED(O.S=0.25)PART.



(A)=4TNV84T-BPCU (D)=
(B)= (E)=
(C)= (F)=

| No. | Lev. | Parts No. | Description | Q'ty (A) | (B) | (C) | (D) | (E) | (F) | I | R |
|---|---|---|---|---|---|---|---|---|---|---|---|
| 1 | 1 | 729508-01560 | BLOCK ASSY, CYLINDER | 1 | | | | | | | |
| 4 | 2 | 129001-01250 | PLUG, 50 | 1 | | | | | | | |
| 5 | 2 | 171051-01921 | PLUG, NPTF1 | 1 | | | | | | | |
| 6 | 2 | 129150-02020 | BOLT, METAL CAP | 10 | | | | | | | |
| 9 | 2 | 129795-02412 | BUSH, CAMSHAFT | 1 | | | | | | | |
| 10 | 2 | 27241-300000 | PLUG 30 | 8 | | | | | | | |
| 11 | 2 | 124060-01050 | PLUG, PT1/8 | 1 | | | | | | | |
| 12 | 2 | 124160-01910 | PLUG, PT1/4 | 2 | | | | | | | |
| 13 | 2 | 124160-01910 | PLUG, PT1/4 | 1 | | | | | | | |
| 14 | 2 | 27241-120000 | PLUG, 12 | 2 | | | | | | | |
| 24 | 2 | 129150-02931 | BEARING, THRUST | 2 | | | | | | | |
| 27 | 1 | 129150-01200 | BOLT, HEAD | 18 | | | | | | | |
| 28 | 1 | 129508-01330 | GASKET, HEAD | 1 | | | | | | | |
| 29 | 1 | 129001-02931 | BEARING, MAIN | 5 | | | | | | | 1 |
| 32 | 1 | 129150-02871 | BEARING, 0.25 US | 5 | | | | | | | 2 |
| 35 | 1 | 129150-02941 | BEARING, THRUST 0.25 | 1 | | | | | | | 3 |

N:Old ←Yes/No→ New. Q:Old ←No/Yes→ New. R:Old ←Yes/Yes→ New. S:Old ←No/No→ New. W:Add. Z:Discontinued. F:Interchangeable by set. K:Q'ty Change

Copyright (C) YANMAR GLOBAL CS CO., LTD. All RightsReserved.

# Fig.2. GEAR HOUSING

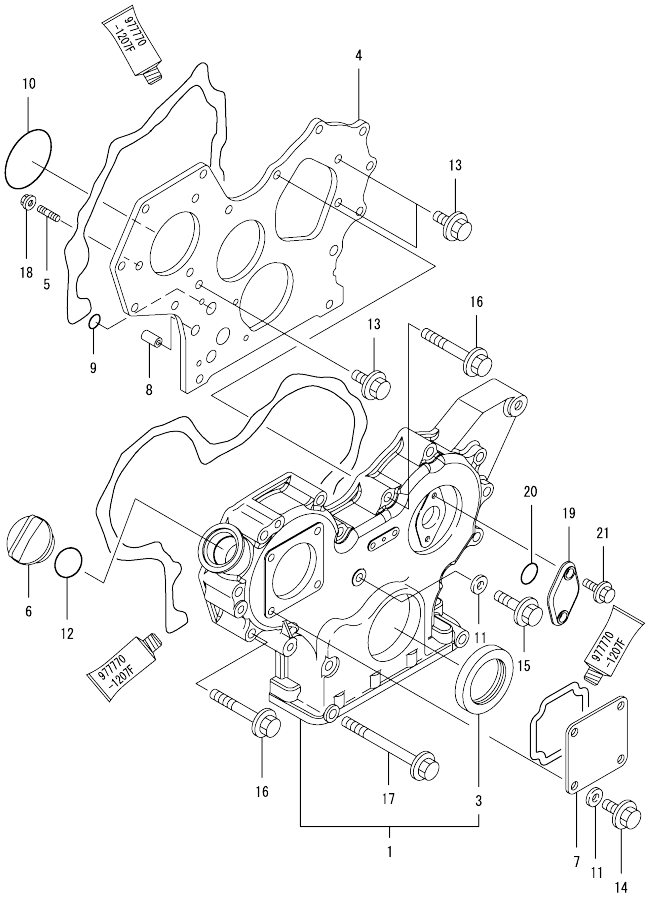




(A)=4TNV84T-BPCU (D)=
(B)= (E)=
(C)= (F)=

| No. | Lev. | Parts No. | Description | Q'ty (A) | (B) | (C) | (D) | (E) | (F) | I | R |
|---|---|---|---|---|---|---|---|---|---|---|---|
| 1 | 1 | 719803-01500 | CASE ASSY, GEAR | 1 | | | | | | | |
| 3 | 2 | 119934-01800 | SEAL, OIL | 1 | | | | | | | |
| 4 | 1 | 119803-01520 | FLANGE, GEAR CASE | 1 | | | | | | | |
| 5 | 1 | 119802-01561 | STUD, M8X25 | 3 | | | | | | | |
| 6 | 1 | 124160-01751 | COVER, FILLER | 1 | | | | | | | |
| 7 | 1 | 124240-01871 | COVER | 1 | | | | | | | |
| 8 | 1 | 129795-01950 | PIPE, KNOCK L=18 | 2 | | | | | | | |
| 9 | 1 | 119609-32040 | O-RING, P16 | 2 | | | | | | | |
| 10 | 1 | 121850-51960 | O-RING | 1 | | | | | | | |
| 11 | 1 | 22190-080002 | WASHER, SEAL 6 | 5 | | | | | | | |
| 12 | 1 | 24311-000320 | O-RING, 1AP32.0 | 1 | | | | | | | |
| 13 | 1 | 26106-080162 | BOLT, M8X 16 PLATED | 3 | | | | | | | |
| 14 | 1 | 26106-080162 | BOLT, M8X 16 PLATED | 4 | | | | | | | |
| 15 | 1 | 26106-080302 | BOLT, M8X 30 PLATED | 1 | | | | | | | |
| 16 | 1 | 26106-080552 | BOLT, M8X 55 PLATED | 12 | | | | | | | |
| 17 | 1 | 26106-080852 | BOLT, M8X 85 PLATED | 3 | | | | | | | |
| 18 | 1 | 26306-080002 | NUT, M8 | 3 | | | | | | | |
| 19 | 1 | 121023-01551 | COVER | 1 | | | | | | | |
| 20 | 1 | 24341-000240 | O-RING, 1AS24.0 | 1 | | | | | | | |
| 21 | 1 | 26106-060162 | BOLT, M6X 16 PLATED | 2 | | | | | | | |

N:Old ←Yes/No→ New. Q:Old ←No/Yes→ New. R:Old ←Yes/Yes→ New. S:Old ←No/No→ New. W:Add. Z:Discontinued. F:Interchangeable by set. K:Q'ty Change

Copyright (C) YANMAR GLOBAL CS CO., LTD. All RightsReserved.

# Fig.3. OIL SUMP

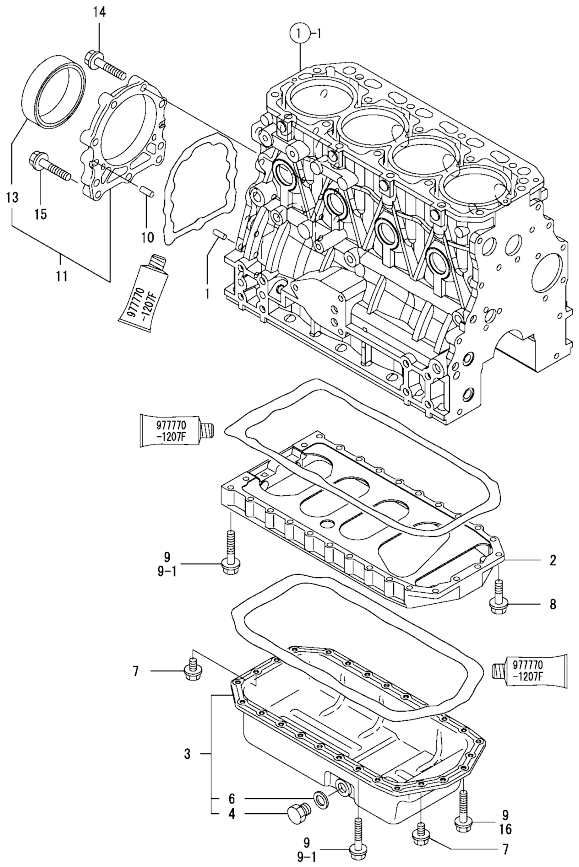




(A)=4TNV84T-BPCU (D)=
(B)= (E)=
(C)= (F)=

| No. | Lev. | Parts No. | Description | Q'ty (A) | (B) | (C) | (D) | (E) | (F) | I | R |
|---|---|---|---|---|---|---|---|---|---|---|---|
| 1 | 1 | 129100-01580 | PIN, M8X16 | 2 | | | | | | | |
| 2 | 1 | 129400-01730 | SPACER, OIL SUMP | 1 | | | | | | | |
| 3 | 1 | 129400-01770 | SUMP ASSY, OIL | 1 | | | | | | | |
| 3-1 | 1 | 129688-01780 | OIL PAN ASSY, DEEP | 1 | | | | | | N | |
| | (A=E51503) | | | | | | | | | | |
| 4 | 2 | 119640-01640 | PLUG, DRAIN M22 | 1 | | | | | | | |
| 6 | 2 | 22190-220002 | WASHER, SEAL 22 | 1 | | | | | | | |
| 7 | 1 | 26106-080162 | BOLT, M8X 16 PLATED | 4 | | | | | | | |
| 8 | 1 | 26106-080252 | BOLT, M8X 25 PLATED | 2 | | | | | | | |
| 9 | 1 | 26106-080452 | BOLT, M8X 45 PLATED | 24 | | | | | | | |
| 9-1 | 1 | 26106-080452 | BOLT, M8X 45 PLATED | 20 | | | | | | K | |
| | (A=FROM 1ST) | | | | | | | | | | |
| 10 | 1 | 129100-01580 | PIN, M8X16 | 2 | | | | | | | |
| 11 | 1 | 129100-01640 | CASE ASSY, OIL SEAL | 1 | | | | | | | |
| 13 | 2 | 129795-01780 | SEAL, OIL | 1 | | | | | | | |
| 14 | 1 | 129486-01670 | BOLT, M8X30 | 6 | | | | | | | |
| 15 | 1 | 26106-080352 | BOLT, M8X 35 PLATED | 3 | | | | | | | |
| 16 | 1 | 26106-080502 | BOLT, M8X 50 PLATED | 4 | | | | | | W | |
| | (A=FROM 1ST) | | | | | | | | | | |

N:Old ←Yes/No→ New. Q:Old ←No/Yes→ New. R:Old ←Yes/Yes→ New. S:Old ←No/No→ New. W:Add. Z:Discontinued. F:Interchangeable by set. K:Q'ty Change

Copyright (C) YANMAR GLOBAL CS CO., LTD. All RightsReserved.

# Fig.4. CYLINDER HEAD & BONNET



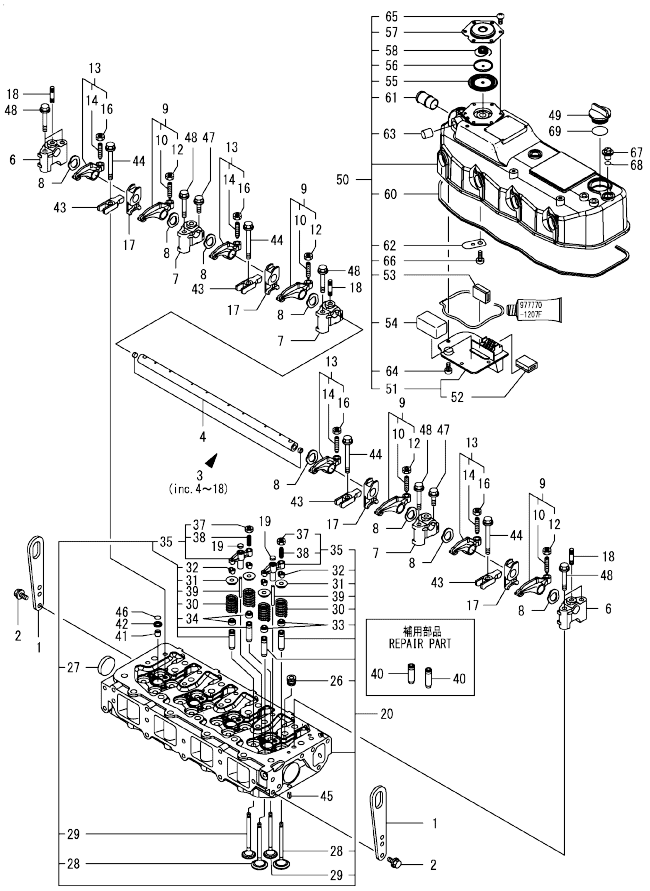


(A)=4TNV84T-BPCU
(B)=
(C)=
(D)=
(E)=
(F)=

| No. | Lev. | Parts No. | Description | Q'ty (A) | (B) | (C) | (D) | (E) | (F) | I | R |
|---|---|---|---|---|---|---|---|---|---|---|---|
| 1 | 1 | 129900-07900 | LIFTER | 2 | | | | | | | |
| 2 | 1 | 26106-080162 | BOLT, M8X 16 PLATED | 4 | | | | | | | |
| 3 | 1 | 129508-11241 | SHAFT ASSY, ROCKER | 1 | | | | | | | |
| 4 | 2 | 129508-11250 | SHAFT, ROCKER ARM | 1 | | | | | | | |
| 6 | 2 | 129508-11260 | SUPPORT, ROCKER ARM | 2 | | | | | | | |
| 7 | 2 | 129508-11270 | SUPPORT, ROCKER ARM | 3 | | | | | | | |
| 8 | 2 | 129508-11280 | WASHER | 8 | | | | | | | |
| 9 | 2 | 129508-11650 | ARM, ROCKER | 4 | | | | | | | |
| 10 | 3 | 129150-11230 | SCREW, VALVE ADJUST | 4 | | | | | | | |
| 12 | 3 | 129150-11750 | NUT, M8 | 4 | | | | | | | |
| 13 | 2 | 129508-11660 | ARM, ROCKER | 4 | | | | | | | |
| 14 | 3 | 129150-11230 | SCREW, VALVE ADJUST | 4 | | | | | | | |
| 16 | 3 | 129150-11750 | NUT, M8 | 4 | | | | | | | |
| 17 | 2 | 129508-11920 | RETAINER | 4 | | | | | | | |
| 18 | 2 | 26226-080352 | STUD, M8X 35 | 3 | | | | | | | |
| 19 | 1 | 123907-11550 | SEAT, VALVE BRIDGE | 8 | | | | | | | |
| 20 | 1 | 129509-11700 | HEAD ASSY, CYLINDER | 1 | | | | | | | |
| 26 | 2 | 23876-020000 | PLUG, R02 | 4 | | | | | | | |
| 27 | 2 | 27241-400000 | PLUG, 40 | 2 | | | | | | | |
| 28 | 2 | 129508-11100 | VALVE, INTAKE | 8 | | | | | | | |
| 29 | 2 | 129508-11110 | VALVE, EXHAUST | 8 | | | | | | | |
| 30 | 2 | 129508-11130 | SPRING, VALVE | 16 | | | | | | | |
| 31 | 2 | 129508-11180 | RETAINER, SPRING | 16 | | | | | | | |
| 32 | 2 | 119717-11190 | COTTER | 32 | | | | | | | |
| 33 | 2 | 119717-11340 | SEAL, VALVE STEM | 8 | | | | | | | |
| 34 | 2 | 119717-11350 | SEAL, VALVE STEM | 8 | | | | | | | |
| 35 | 2 | 129672-11510 | BRIDGE ASSY, VALVE | 8 | | | | | | | |
| 37 | 3 | 129150-11750 | NUT, M8 | 8 | | | | | | | |
| 38 | 3 | 123907-11830 | ADJUSTER | 8 | | | | | | | |
| 39 | 2 | 129508-11820 | GUIDE | 8 | | | | | | | |
| 40 | 1 | 119717-11800 | GUIDE, VALVE | 16 | | | | | | | 1 |
| 41 | 1 | 119802-11870 | PROTECTOR, NOZZLE | 4 | | | | | | | |
| 42 | 1 | 119625-11880 | SEAT, NOZZLE | 4 | | | | | | | |
| 43 | 1 | 129508-11900 | RETAINER, NOZZLE | 4 | | | | | | | |
| 44 | 1 | 129907-11950 | BOLT, M8X75 | 4 | | | | | | | |
| 45 | 1 | 22351-060012 | PIN, SPRING 6.0X12 | 2 | | | | | | | |
| 46 | 1 | 24311-000120 | O-RING, 1AP12.0 | 4 | | | | | | | |
| 47 | 1 | 26106-080252 | BOLT, M8X 25 PLATED | 3 | | | | | | | |
| 48 | 1 | 26106-080502 | BOLT, M8X 50 PLATED | 7 | | | | | | | |
| 49 | 1 | 124160-01751 | COVER, FILLER | 1 | | | | | | | |
| 50 | 1 | 129584-11350 | BONNET ASSY, HEAD | 1 | | | | | | | |
| 51 | 2 | 129508-03010 | PLATE | 1 | | | | | | | |
| 52 | 3 | 119802-03070 | BAFFLE, BREATHER | 1 | | | | | | | |
| 53 | 2 | 129150-03070 | BAFFLE, BREATHER | 1 | | | | | | | |
| 54 | 2 | 129907-03070 | BAFFLE, BREATHER | 1 | | | | | | | |
| 55 | 2 | 123907-03100 | DIAPHRAGM | 1 | | | | | | | |
| 56 | 2 | 123907-03110 | PLATE | 1 | | | | | | | |
| 57 | 2 | 123907-03120 | PLATE, BREATHER | 1 | | | | | | | |
| 58 | 2 | 123907-03140 | SPRING, DIAPHRAGM | 1 | | | | | | | |
| 60 | 2 | 129508-11310 | GASKET, BONNET | 1 | | | | | | | |
| 61 | 2 | 129001-11340 | PIPE , BREATHER | 1 | | | | | | | |

Remarks
(1) REPAIR PART.

N:Old ←Yes/No→ New. Q:Old ←No/Yes→ New. R:Old ←Yes/Yes→ New. S:Old ←No/No→ New. W:Add. Z:Discontinued. F:Interchangeable by set. K:Q'ty Change

++ CONTINUE ++

Copyright (C) YANMAR GLOBAL CS CO., LTD. All RightsReserved.

# Fig.4. CYLINDER HEAD & BONNET



(A)=4TNV84T-BPCU
(B)=
(C)=
(D)=
(E)=
(F)=

| No. | Lev. | Parts No. | Description | Q'ty (A) | (B) | (C) | (D) | (E) | (F) | I | R |
|---|---|---|---|---|---|---|---|---|---|---|---|
| 62 | 2 | 129009-11340 | SPRING | 1 | | | | | | | |
| 63 | 2 | 119640-61400 | PLUG | 1 | | | | | | | |
| 64 | 2 | 22857-500100 | SCREW, 5X10 | 4 | | | | | | | |
| 65 | 2 | 22857-500100 | SCREW, 5X10 | 6 | | | | | | | |
| 66 | 2 | 22857-500100 | SCREW, 5X10 | 1 | | | | | | | |
| 67 | 1 | 124160-11360 | KNOB | 3 | | | | | | | |
| 68 | 1 | 24311-000120 | O-RING, 1AP12.0 | 3 | | | | | | | |
| 69 | 1 | 24311-000320 | O-RING, 1AP32.0 | 1 | | | | | | | |

Remarks
(1) REPAIR PART.

N:Old ←Yes/No→ New. Q:Old ←No/Yes→ New. R:Old ←Yes/Yes→ New. S:Old ←No/No→ New. W:Add. Z:Discontinued. F:Interchangeable by set. K:Q'ty Change

Copyright (C) YANMAR GLOBAL CS CO., LTD. All RightsReserved.

# Fig.5. SUCTION MANIFOLD & AIR CLEANER



(A)=4TNV84T-BPCU
(B)=
(C)=
(D)=
(E)=
(F)=

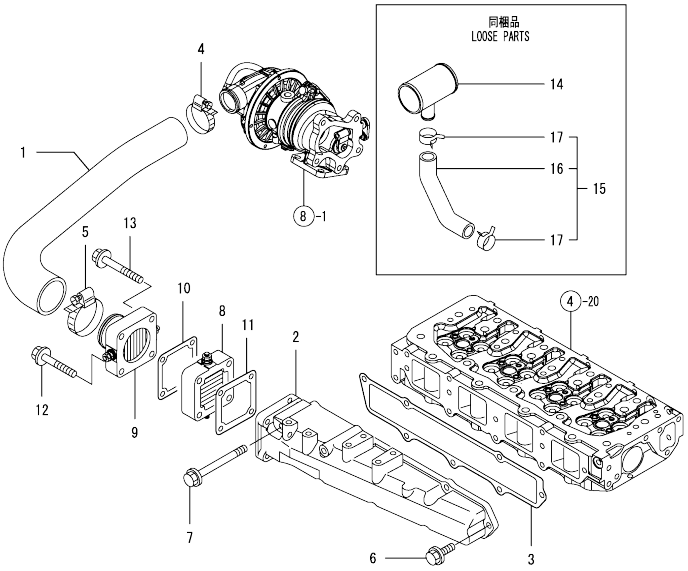


| No. | Lev. | Parts No. | Description | Q'ty (A) | (B) | (C) | (D) | (E) | (F) | I | R |
|---|---|---|---|---|---|---|---|---|---|---|---|
| 1 | 1 | 129584-12060 | PIPE, AIR INTAKE | 1 | | | | | | | |
| 2 | 1 | 129508-12100 | MANIFOLD, AIR INTAKE | 1 | | | | | | | |
| 3 | 1 | 129508-12110 | GASKET, MANIFOLD | 1 | | | | | | | |
| 4 | 1 | 23000-048000 | CLAMP, 48 | 1 | | | | | | | |
| 5 | 1 | 23000-060000 | CLAMP, 60 | 1 | | | | | | | |
| 6 | 1 | 26106-080202 | BOLT, M8X 20 PLATED | 5 | | | | | | | |
| 7 | 1 | 26106-080802 | BOLT, M8X 80 PLATED | 2 | | | | | | | |
| 8 | 1 | 129100-77501 | HEATER | 1 | | | | | | | |
| 8-1 | 1 | 129400-77501 | HEATER | 1 | | | | | | N | |
| | (A=EXXXXX) | | | | | | | | | | |
| 9 | 1 | 129120-77502 | HEATER | 1 | | | | | | | |
| 10 | 1 | 129100-77510 | GASKET, AIR HEATER | 1 | | | | | | | |
| 11 | 1 | 129150-77511 | GASKET | 1 | | | | | | | |
| 12 | 1 | 26106-080552 | BOLT, M8X 55 PLATED | 2 | | | | | | | |
| 13 | 1 | 26106-080602 | BOLT, M8X 60 PLATED | 2 | | | | | | | |
| 14 | 1 | 129509-03050 | JOINT, BREATHER | 1 | | | | | | | |
| 14-1 | 1 | 129009-03050 | JOINT, BREATHER | 1 | | | | | | N | |
| | (A=EXXXXX) | | | | | | | | | | |
| 15 | 1 | 129509-03080 | HOSE ASSY, BREATHER | 1 | | | | | | | |
| 16 | 2 | 129509-03090 | HOSE, BREATHER | 1 | | | | | | | |
| 17 | 2 | 129410-03990 | CLAMP 22 | 2 | | | | | | | |

N:Old ◄Yes/No► New. Q:Old ◄No/Yes► New. R:Old ◄Yes/Yes► New. S:Old ◄No/No► New. W:Add. Z:Discontinued. F:Interchangeable by set. K:Q'ty Change

Copyright (C) YANMAR GLOBAL CS CO., LTD. All RightsReserved.

# Fig.6. EXHAUST MANIFOLD

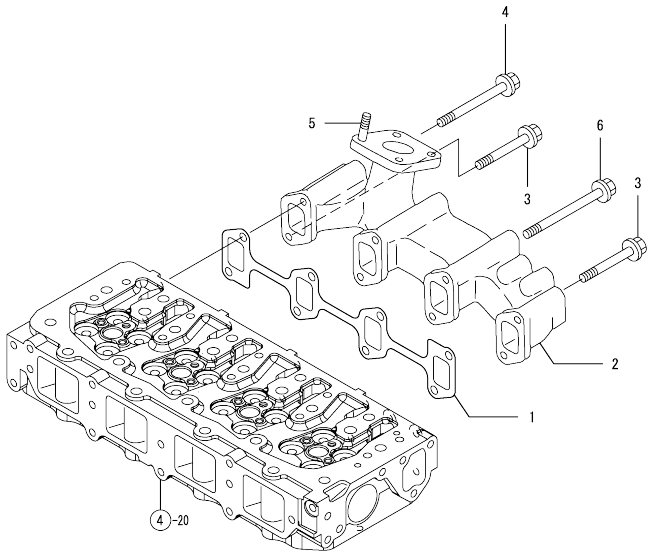




(A)=4TNV84T-BPCU (D)=
(B)= (E)=
(C)= (F)=

| No. | Lev. | Parts No. | Description | Q'ty (A) | (B) | (C) | (D) | (E) | (F) | I | R |
|---|---|---|---|---|---|---|---|---|---|---|---|
| 1 | 1 | 129550-13110 | GASKET | 1 | | | | | | | |
| 2 | 1 | 129403-13120 | MANIFOLD, EXHAUST | 1 | | | | | | | |
| 3 | 1 | 119802-13650 | BOLT, M8X65 | 3 | | | | | | | |
| 4 | 1 | 119802-13670 | BOLT, M8X85 | 1 | | | | | | | |
| 5 | 1 | 119131-18320 | STUD, M8X22 | 4 | | | | | | | |
| 6 | 1 | 129693-44310 | BOLT | 4 | | | | | | | |
| 6-1 | 1 | 119802-13820 | BOLT, M8X100 9.8T | 4 | | | | | | N | |
| | (A=*2009.12) | | | | | | | | | | |

N:Old ◄Yes/No► New. Q:Old ◄No/Yes► New. R:Old ◄Yes/Yes► New. S:Old ◄No/No► New. W:Add. Z:Discontinued. F:Interchangeable by set. K:Q'ty Change

Copyright (C) YANMAR GLOBAL CS CO., LTD. All RightsReserved.

# Fig.7. CAMSHAFT & DRIVING GEAR

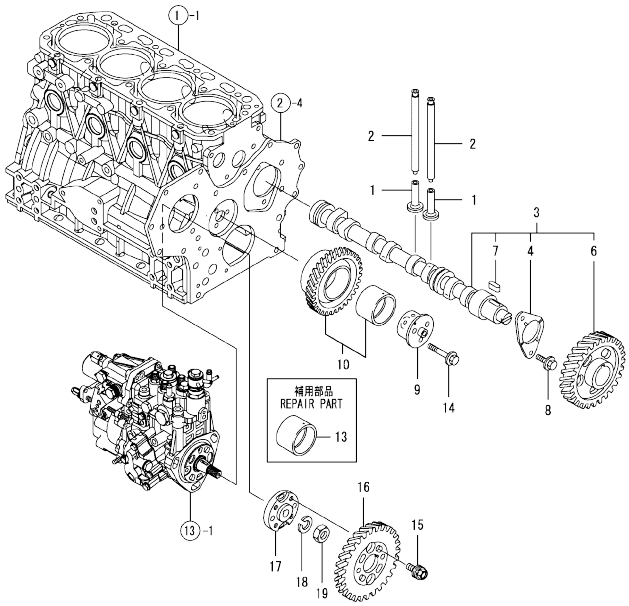




(A)=4TNV84T-BPCU (D)=
(B)= (E)=
(C)= (F)=

| No. | Lev. | Parts No. | Description | Q'ty (A) | (B) | (C) | (D) | (E) | (F) | I | R |
|---|---|---|---|---|---|---|---|---|---|---|---|
| 1 | 1 | 129150-14200 | TAPPET | 8 | | | | | | | |
| 2 | 1 | 129150-14400 | ROD, PUSH L=178 | 8 | | | | | | | |
| 3 | 1 | 129508-14580 | CAMSHAFT ASSY | 1 | | | | | | | |
| 4 | 2 | 129150-02450 | BEARING, THRUST | 1 | | | | | | | |
| 6 | 2 | 129150-14101 | GEAR, CAMSHAFT | 1 | | | | | | | |
| 7 | 2 | 22512-070140 | KEY, 7X 14 | 1 | | | | | | | |
| 8 | 1 | 26106-080142 | BOLT, M8X 14 PLATED | 2 | | | | | | | |
| 9 | 1 | 119803-25050 | SHAFT, IDLE | 1 | | | | | | | |
| 10 | 1 | 119802-25101 | GEAR ASSY, IDLE | 1 | | | | | | | |
| 13 | 1 | 119802-25071 | BUSH, IDLE GEAR | 1 | | | | | | | 1 |
| 14 | 1 | 26106-080402 | BOLT, M8X 40 PLATED | 3 | | | | | | | |
| 15 | 1 | 129150-25301 | BOLT | 4 | | | | | | | |
| 16 | 1 | 119802-25901 | GEAR, PUMP | 1 | | | | | | | |
| 17 | 1 | 158552-51151 | FLANGE | 1 | | | | | | | |
| 18 | 1 | 22217-140000 | WASHER, SPRING 14 | 1 | | | | | | | |
| 19 | 1 | 26776-140002 | NUT, LOCK M14 | 1 | | | | | | | |

Remarks
(1) REPAIR PART.

N:Old ←Yes/No→ New. Q:Old ←No/Yes→ New. R:Old ←Yes/Yes→ New. S:Old ←No/No→ New. W:Add. Z:Discontinued. F:Interchangeable by set. K:Q'ty Change

Copyright (C) YANMAR GLOBAL CS CO., LTD. All RightsReserved.

# Fig.8. TURBINE

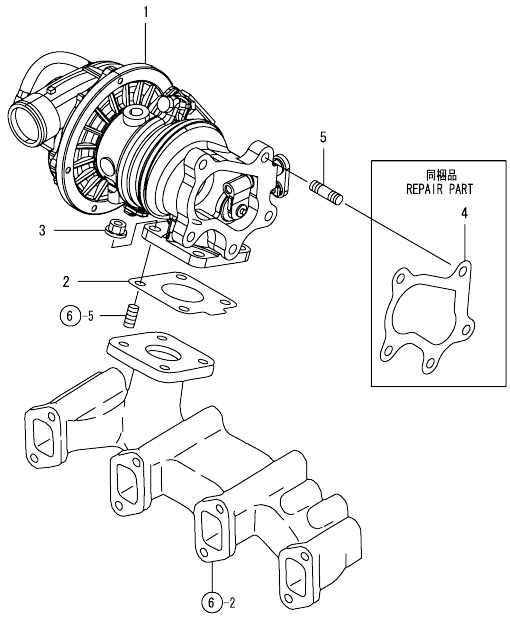




(A)=4TNV84T-BPCU (D)=
(B)= (E)=
(C)= (F)=

| No. | Lev. | Parts No. | Description | Q'ty (A) | (B) | (C) | (D) | (E) | (F) | I | R |
|---|---|---|---|---|---|---|---|---|---|---|---|
| 1 | 1 | 129567-18010 | TURBINE, RHF5 | 1 | | | | | | | |
| 2 | 1 | 129508-18080 | GASKET | 1 | | | | | | | |
| 3 | 1 | 26306-080002 | NUT, M8 | 4 | | | | | | | |
| 4 | 1 | 129508-18090 | GASKET | 1 | | | | | | | |
| 5 | 1 | 129418-18320 | STUD, M8X20 | 5 | | | | | | W | |
| | (A=EXXXXX) | | | | | | | | | | |

N:Old ←Yes/No→ New. Q:Old ←No/Yes→ New. R:Old ←Yes/Yes→ New. S:Old ←No/No→ New. W:Add. Z:Discontinued. F:Interchangeable by set. K:Q'ty Change

Copyright (C) YANMAR GLOBAL CS CO., LTD. All RightsReserved.

# Fig.9. CRANKSHAFT & PISTON



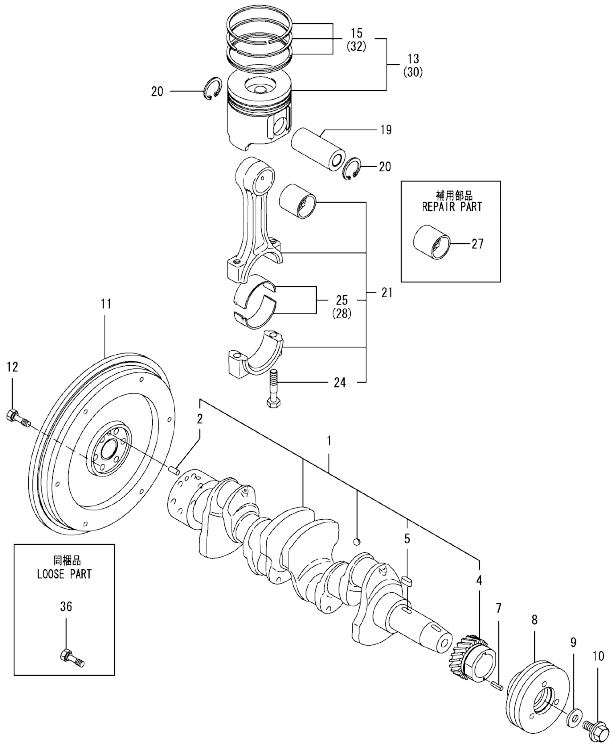


(A)=4TNV84T-BPCU
(B)=
(C)=
(D)=
(E)=
(F)=

| No. | Lev. | Parts No. | Description | Q'ty (A) | (B) | (C) | (D) | (E) | (F) | I | R |
|---|---|---|---|---|---|---|---|---|---|---|---|
| 1 | 1 | 129509-21000 | CRANKSHAFT ASSY | 1 | | | | | | | |
| 2 | 2 | 129100-01580 | PIN, M8X16 | 1 | | | | | | | |
| 4 | 2 | 119803-21200 | GEAR, CRANKSHAFT | 1 | | | | | | | |
| 5 | 2 | 22512-070140 | KEY, 7X 14 | 1 | | | | | | | |
| 7 | 1 | 22351-030010 | PIN, SPRING 3.0X10 | 1 | | | | | | | |
| 8 | 1 | 119802-21660 | V-PULLEY, 120 | 1 | | | | | | | |
| 9 | 1 | 129795-21661 | WASHER | 1 | | | | | | | |
| 10 | 1 | 121850-21680 | BOLT | 1 | | | | | | | |
| 11 | 1 | 129659-21410 | FLYWHEEL | 1 | | | | | | | |
| 12 | 1 | 121111-21501 | BOLT, FLYWHEEL | 6 | | | | | | | |
| 13 | 1 | 129508-22080 | PISTON ASSY | 4 | | | | | | | |
| 15 | 2 | 129004-22500 | RING SET, PISTON | 4 | | | | | | | |
| 19 | 1 | 129202-22300 | PIN, PISTON D26 L70 | 4 | | | | | | | |
| 20 | 1 | 22252-000260 | RING, 26 | 8 | | | | | | | |
| 21 | 1 | 729402-23100 | ROD ASSY, CONNECTING | 4 | | | | | | | |
| 24 | 2 | 121550-23200 | BOLT, CONNECTING ROD | 8 | | | | | | | |
| 25 | 2 | 129150-23601 | BEARING, CRANK PIN | 4 | | | | | | | |
| 27 | 1 | 129100-23910 | BEARING, PISTON PIN | 4 | | | | | | | 1 |
| 28 | 1 | 129150-23611 | BEARING, 0.25 US | 4 | | | | | | | 2 |
| 30 | 1 | 129508-22900 | PISTON ASSY, 0.25 OS | 4 | | | | | | | 3 |
| 32 | 2 | 129004-22950 | RING SET, 0.25 OS | 4 | | | | | | | 3 |
| 36 | 1 | 121111-21501 | BOLT, FLYWHEEL | 6 | | | | | | | |

Remarks
(1) REPAIR PART.
(2) OVER-SIZE(O.S=0.25)PART.
(3) UNDER-SIZE(U.S=0.25)PART.

N:Old ←Yes/No→ New. Q:Old ←No/Yes→ New. R:Old ←Yes/Yes→ New. S:Old ←No/No→ New. W:Add. Z:Discontinued. F:Interchangeable by set. K:Q'ty Change

Copyright (C) YANMAR GLOBAL CS CO., LTD. All RightsReserved.

# Fig.10. LUB.OIL SYSTEM

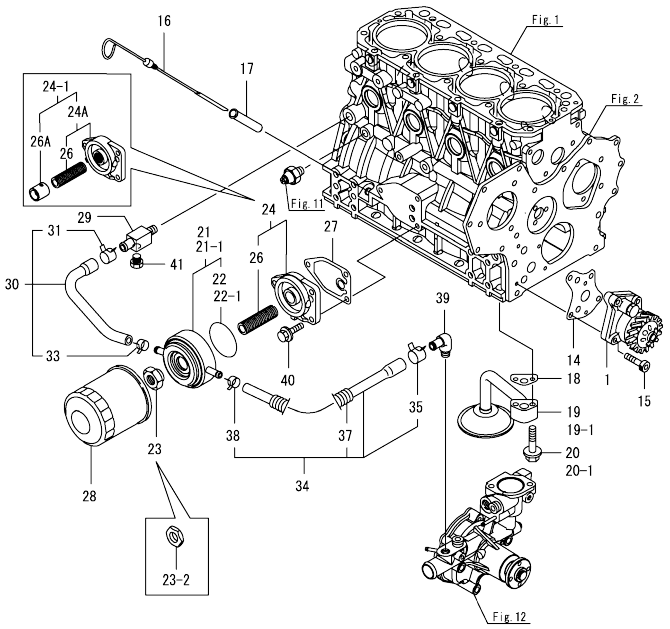




(A)=4TNV84T-BPCU (D)=
(B)= (E)=
(C)= (F)=

| No. | Lev. | Parts No. | Description | Q'ty (A) | (B) | (C) | (D) | (E) | (F) | I | R |
|---|---|---|---|---|---|---|---|---|---|---|---|
| 1 | 1 | 129418-32000 | PUMP ASSY, OIL | 1 | | | | | | | |
| 14 | 1 | 129150-32020 | GASKET, PUMP | 1 | | | | | | | |
| 15 | 1 | 26450-060252 | BOLT, M6X 25 | 4 | | | | | | | |
| 16 | 1 | 129004-34802 | DIPSTICK | 1 | | | | | | | |
| 17 | 1 | 121520-34810 | GUIDE, DIPSTICK | 1 | | | | | | | |
| 18 | 1 | 129150-35042 | GASKET | 1 | | | | | | | |
| 19 | 1 | 129436-35091 | PIPE ASSY, OIL INLET | 1 | | | | | | | |
| 19-1 | 1 | 129436-35070 | PIPE ASSY, OIL INLET | 1 | | | | | | | S |
| | (A=EZZZZZ) | | | | | | | | | | |
| 20 | 1 | 26106-080352 | BOLT, M8X 35 PLATED | 2 | | | | | | | |
| 20-1 | 1 | 26106-080552 | BOLT, M8X 55 PLATED | 1 | | | | | | | S |
| | (A=EZZZZZ) | | | | | | | | | | |
| 21 | 1 | 129508-33010 | COOLER ASSY, OIL | 1 | | | | | | | |
| 21-1 | 1 | 129508-33031 | COOLER ASSY, OIL | 1 | | | | | | | S |
| | (A=E92892) | | | | | | | | | | |
| 22 | 2 | 129508-33050 | O-RING | 1 | | | | | | | |
| 22-1 | 2 | 129508-33060 | GASKET, COOLER | 1 | | | | | | | S |
| | (A=E92892) | | | | | | | | | | |
| 23 | 1 | 129417-33110 | NUT | 1 | | | | | | | |
| 23-1 | 1 | 129417-33111 | NUT, OIL COOLER | 1 | | | | | | | R |
| | (A=E47538) | | | | | | | | | | |
| 23-2 | 1 | 124085-35350 | NUT, M20 | 1 | | | | | | | S |
| | (A=E92892) | | | | | | | | | | |
| 24 | 1 | 129006-35100 | BRACKET ASSY, FILTER | 1 | | | | | | | |
| 24-1 | 1 | 129508-35100 | BRACKET ASSY,LO FILT | 1 | | | | | | | S |
| | (A=E92892) | | | | | | | | | | |
| 24A | 2 | 129006-35100 | BRACKET ASSY, FILTER | 1 | | | | | | | W |
| | (A=E92892) | | | | | | | | | | |
| 26 | 3 | 129417-35150 | BOLT, STUD M20X67 | 1 | | | | | | | |
| 26A | 2 | 129508-35150 | COLLAR, OIL-COOLER | 1 | | | | | | | W |
| | (A=E92892) | | | | | | | | | | |
| 27 | 1 | 129150-35111 | GASKET | 1 | | | | | | | |
| 28 | 1 | 119005-35160 | FILTER, OIL 80X100L | 1 | | | | | | | |
| 29 | 1 | 129006-44480 | JOINT | 1 | | | | | | | |
| 30 | 1 | 129508-49030 | HOSE ASSY, WATER | 1 | | | | | | | |
| 31 | 2 | 171008-03990 | CLAMP, HOSE 18.5 | 1 | | | | | | | |
| 33 | 2 | 23080-015000 | CLAMP, 15 | 1 | | | | | | | |
| 34 | 1 | 129508-49040 | HOSE ASSY, WATER | 1 | | | | | | | |
| 35 | 2 | 171008-03990 | CLAMP, HOSE 18.5 | 1 | | | | | | | |
| 37 | 2 | 119940-59130 | TUBE, CORRUGATED 19 | 1 | | | | | | | |
| 38 | 2 | 23080-015000 | CLAMP, 15 | 1 | | | | | | | |
| 39 | 1 | 129103-49301 | ELBOW, PT1/4 | 1 | | | | | | | |
| 40 | 1 | 26106-080202 | BOLT, M8X 20 PLATED | 3 | | | | | | | |
| 41 | 1 | 171056-49120 | PLUG, DRAIN R1/4 | 1 | | | | | | | |

N:Old ←Yes/No→ New. Q:Old ←No/Yes→ New. R:Old ←Yes/Yes→ New. S:Old ←No/No→ New. W:Add. Z:Discontinued. F:Interchangeable by set. K:Q'ty Change

Copyright (C) YANMAR GLOBAL CS CO., LTD. All RightsReserved.

0CW10-M48901 4TNV84T-BPCU

# Fig.11. LUB.OIL LINE

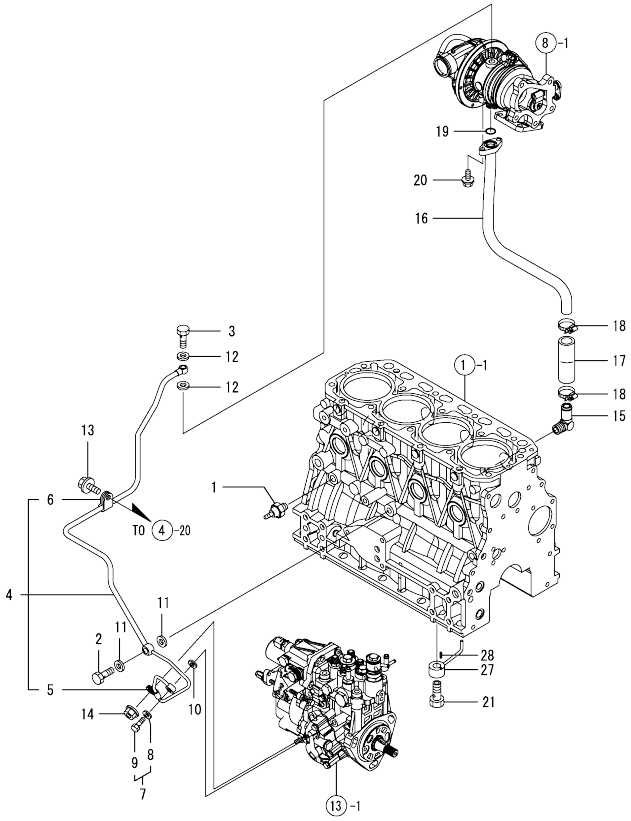


0CW10-M48901 Fig.11

(A)=4TNV84T-BPCU (D)=
(B)= (E)=
(C)= (F)=

| No. | Lev. | Parts No. | Description | Q'ty (A) | (B) | (C) | (D) | (E) | (F) | I | R |
|---|---|---|---|---|---|---|---|---|---|---|---|
| 1 | 1 | 114250-39450 | SWITCH, 0.5KG | 1 | | | | | | | |
| 2 | 1 | 124160-39140 | BOLT, PIPE JOINT M10 | 1 | | | | | | | |
| 3 | 1 | 121252-39150 | BOLT, JOINT M10X1.5 | 1 | | | | | | | |
| 4 | 1 | 129508-39450 | PIPE ASSY, OIL | 1 | | | | | | | |
| 5 | 2 | 119802-39500 | RETAINER, PIPE | 1 | | | | | | | |
| 6 | 2 | 124223-39900 | RETAINER | 1 | | | | | | | |
| 7 | 1 | 129005-59830 | BOLT ASSY, JOINT M8 | 1 | | | | | | | |
| 8 | 2 | 22190-080002 | WASHER, SEAL 6 | 1 | | | | | | | |
| 9 | 2 | 23857-030000 | BOLT, JOINT 3 | 1 | | | | | | | |
| 10 | 1 | 22190-080002 | WASHER, SEAL 6 | 1 | | | | | | | |
| 11 | 1 | 22190-100002 | WASHER, SEAL 10 | 2 | | | | | | | |
| 12 | 1 | 23414-100000 | GASKET, 10X1.0 | 2 | | | | | | | |
| 13 | 1 | 26106-080122 | BOLT, M8X 12 PLATED | 1 | | | | | | | |
| 14 | 1 | 26366-060002 | NUT, M6 | 1 | | | | | | | |
| 15 | 1 | 124070-13300 | ELBOW, PT3/8 | 1 | | | | | | | |
| 16 | 1 | 129508-39600 | PIPE, OIL | 1 | | | | | | | |
| 17 | 1 | 123901-39820 | HOSE | 1 | | | | | | | |
| 18 | 1 | 23000-025000 | CLAMP, 25 | 2 | | | | | | | |
| 19 | 1 | 24316-000160 | O-RING, 4DP16.0 | 1 | | | | | | | |
| 20 | 1 | 26106-060162 | BOLT, M6X 16 PLATED | 2 | | | | | | | |
| 21 | 1 | 129792-39410 | VALVE ASSY, CHECK | 4 | | | | | | | |
| 27 | 1 | 129553-39650 | NOZZLE | 4 | | | | | | | |
| 28 | 1 | 22351-030010 | PIN, SPRING 3.0X10 | 4 | | | | | | | |

N:Old ←Yes/No→ New. Q:Old ←No/Yes→ New. R:Old ←Yes/Yes→ New. S:Old ←No/No→ New. W:Add. Z:Discontinued. F:Interchangeable by set. K:Q'ty Change

Copyright (C) YANMAR GLOBAL CS CO., LTD. All RightsReserved.

# Fig.12. COOLING WATER SYSTEM



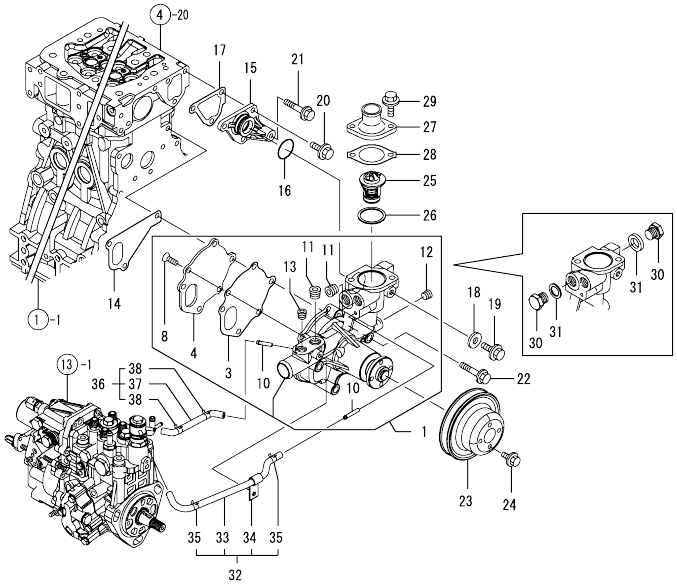


(A)=4TNV84T-BPCU
(B)=
(C)=
(D)=
(E)=
(F)=

| No. | Lev. | Parts No. | Description | Q'ty (A) | (B) | (C) | (D) | (E) | (F) | I | R |
|---|---|---|---|---|---|---|---|---|---|---|---|
| 1 | 1 | 129508-42001 | PUMP ASSY, WATER | 1 | | | | | | | |
| 3 | 2 | 129100-42051 | GASKET, WATER PUMP | 1 | | | | | | | |
| 4 | 2 | 129100-42121 | PLATE | 1 | | | | | | | |
| 8 | 2 | 121850-42410 | SCREW | 3 | | | | | | | |
| 10 | 2 | 119802-49113 | JOINT, PIPE | 2 | | | | | | | |
| 11 | 2 | 129916-49740 | PLUG, R03 | 2 | | | | | | | |
| 12 | 2 | 23876-010000 | PLUG, R01 | 1 | | | | | | | |
| 13 | 2 | 23876-020000 | PLUG, R02 | 1 | | | | | | | |
| 14 | 1 | 129486-42021 | GASKET, WATER PUMP | 1 | | | | | | | |
| 15 | 1 | 129004-42040 | JOINT | 1 | | | | | | | |
| 16 | 1 | 129486-42140 | O-RING, G30 | 1 | | | | | | | |
| 17 | 1 | 124395-49840 | GASKET | 1 | | | | | | | |
| 18 | 1 | 23414-080000 | GASKET, 8X1.0 | 1 | | | | | | | |
| 19 | 1 | 26106-080122 | BOLT, M8X 12 PLATED | 1 | | | | | | | |
| 20 | 1 | 26106-080162 | BOLT, M8X 16 PLATED | 3 | | | | | | | |
| 21 | 1 | 26106-080452 | BOLT, M8X 45 PLATED | 1 | | | | | | | |
| 22 | 1 | 26106-080602 | BOLT, M8X 60 PLATED | 3 | | | | | | | |
| 23 | 1 | 129403-42380 | V-PULLEY, D=110 | 1 | | | | | | | |
| 24 | 1 | 26106-060122 | BOLT, M6X 12 PLATED | 4 | | | | | | | |
| 25 | 1 | 129457-49801 | THERMOSTAT, 82 | 1 | | | | | | | |
| 26 | 1 | 129150-49811 | GASKET, THERMOSTAT | 1 | | | | | | | |
| 27 | 1 | 129350-49530 | COVER, THERMOSTAT | 1 | | | | | | | |
| 28 | 1 | 129795-49551 | GASKET | 1 | | | | | | | |
| 29 | 1 | 26106-080222 | BOLT, M8X 22 PLATED | 2 | | | | | | | |
| 30 | 1 | 121450-42450 | PLUG, M16 | 2 | | | | | | | |
| 31 | 1 | 124465-44950 | GASKET, 16 | 2 | | | | | | | |
| 32 | 1 | 129004-49610 | PIPE ASSY, WATER | 1 | | | | | | | |
| 33 | 2 | 129004-49711 | PIPE ASSY, WATER | 1 | | | | | | | |
| 34 | 2 | 119802-49730 | RETAINER, PIPE | 1 | | | | | | | |
| 35 | 2 | 124722-59050 | CLIP, HOSE 9 | 2 | | | | | | | |
| 36 | 1 | 129004-49620 | PIPE ASSY, WATER | 1 | | | | | | | |
| 37 | 2 | 129004-49721 | PIPE ASSY, WATER | 1 | | | | | | | |
| 38 | 2 | 124722-59050 | CLIP, HOSE 9 | 2 | | | | | | | |

N:Old ←Yes/No→ New. Q:Old ←No/Yes→ New. R:Old ←Yes/Yes→ New. S:Old ←No/No→ New. W:Add. Z:Discontinued. F:Interchangeable by set. K:Q'ty Change

Copyright (C) YANMAR GLOBAL CS CO., LTD. All RightsReserved.

# Fig.13. FUEL INJECTION PUMP



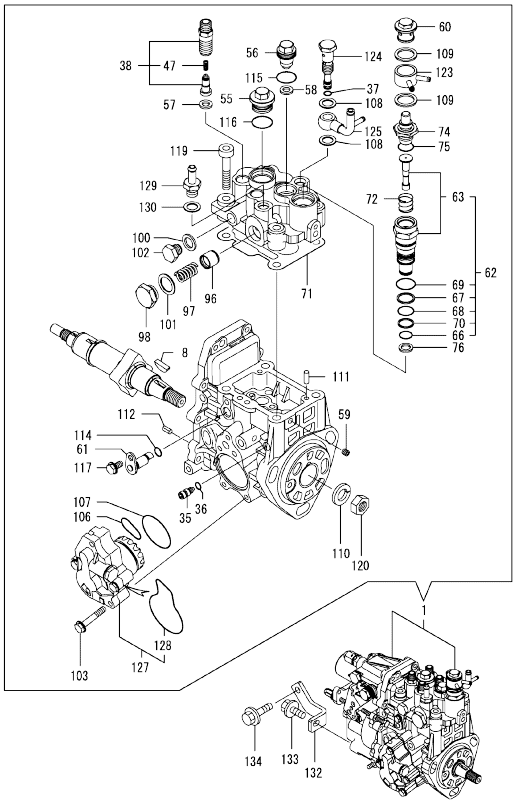


Remarks
(1) GOVERNOR ASSY(FIG.14) IS INCORPORATED IN THIS FOP.CMP (REF.NO.1).

(A)=4TNV84T-BPCU (D)=
(B)= (E)=
(C)= (F)=

| No. | Lev. | Parts No. | Description | Q'ty (A) | (B) | (C) | (D) | (E) | (F) | I | R |
|---|---|---|---|---|---|---|---|---|---|---|---|
| 1 | 1 | 729584-51310 | PUMP ASSY, INJECTION | 1 | | | | | | | 1 |
| 8 | 2 | 119802-51090 | KEY, 4X16 | 1 | | | | | | | |
| 35 | 2 | 158600-51270 | STOPPER, TAPPET | 1 | | | | | | | |
| 36 | 2 | 158563-51281 | O-RING, 4D S6 | 1 | | | | | | | |
| 37 | 2 | 158563-51281 | O-RING, 4D S6 | 1 | | | | | | | |
| 38 | 2 | 129509-51390 | VALVE ASSY, DELIVERY | 4 | | | | | | | |
| 47 | 3 | 158563-51330 | SPRING, DELIVERY | 4 | | | | | | | |
| 55 | 2 | 158601-51550 | PLUG | 1 | | | | | | | |
| 56 | 2 | 119802-51560 | PLUG, BARREL | 1 | | | | | | | |
| 57 | 2 | 158552-51571 | GASKET | 4 | | | | | | | |
| 58 | 2 | 158552-51571 | GASKET | 1 | | | | | | | |
| 59 | 2 | 158557-51570 | PLUG | 1 | | | | | | | |
| 60 | 2 | 158601-51570 | PLUG | 1 | | | | | | | |
| 61 | 2 | 158552-51580 | LIFTER | 1 | | | | | | | |
| 62 | 2 | 119802-51590 | TIMER SET | 1 | | | | | | | |
| 63 | 3 | 119802-51600 | TIMER ASSY | 1 | | | | | | | |
| 66 | 3 | 158553-51670 | O-RING, 1011 | 1 | | | | | | | |
| 67 | 3 | 119802-51680 | RING, BACK UP | 1 | | | | | | | |
| 68 | 3 | 119802-51690 | O-RING | 1 | | | | | | | |
| 69 | 3 | 24356-010200 | O-RING, 4D1020 | 1 | | | | | | | |
| 70 | 3 | 24372-000150 | RING, BACK UP T2P15 | 1 | | | | | | | |
| 71 | 2 | 158552-51600 | GASKET | 1 | | | | | | | |
| 72 | 2 | 158553-51630 | SPRING, TIMER | 1 | | | | | | | |
| 74 | 2 | 158553-51640 | ELEMENT | 1 | | | | | | | |
| 75 | 2 | 158553-51660 | O-RING, P14 | 1 | | | | | | | |
| 76 | 2 | 158553-51680 | GASKET | 1 | | | | | | | |
| 96 | 2 | 158601-51770 | PISTON | 1 | | | | | | | |
| 97 | 2 | 158552-51781 | SPRING | 1 | | | | | | | |
| 98 | 2 | 158601-51790 | PLUG | 1 | | | | | | | |
| 100 | 2 | 22190-120002 | WASHER, SEAL 12 | 1 | | | | | | | |
| 101 | 2 | 22190-180002 | WASHER, SEAL 18 | 1 | | | | | | | |
| 102 | 2 | 23887-120002 | PLUG, 12 | 1 | | | | | | | |
| 102-1 | 2 | 158553-51930 | PLUG, M12 | 1 | | | | | | R | |
| | (A=EXXXXX) | | | | | | | | | | |
| 103 | 2 | 158553-51770 | BOLT | 4 | | | | | | | |
| 106 | 2 | 158552-52310 | O-RING | 1 | | | | | | | |
| 107 | 2 | 158552-52400 | O-RING, 4E S42 | 1 | | | | | | | |
| 108 | 2 | 22190-120002 | WASHER, SEAL 12 | 2 | | | | | | | |
| 109 | 2 | 22190-180002 | WASHER, SEAL 18 | 2 | | | | | | | |
| 110 | 2 | 22217-140000 | WASHER, SPRING 14 | 1 | | | | | | | |
| 111 | 2 | 22312-050140 | PIN, PARALLEL M5X14 | 2 | | | | | | | |
| 112 | 2 | 22351-050010 | PIN, SPRING 5.0X10 | 2 | | | | | | | |
| 114 | 2 | 24311-000070 | O-RING, 1AP7.0 | 1 | | | | | | | |
| 115 | 2 | 24356-010180 | O-RING, 4D1018 | 1 | | | | | | | |
| 116 | 2 | 24356-010200 | O-RING, 4D1020 | 1 | | | | | | | |
| 117 | 2 | 26106-060102 | BOLT, M6X 10 PLATED | 1 | | | | | | | |
| 119 | 2 | 26450-080452 | BOLT, M8X 45 | 4 | | | | | | | |
| 120 | 2 | 26776-140002 | NUT, LOCK M14 | 1 | | | | | | | |
| 123 | 2 | 158553-51551 | JOINT | 1 | | | | | | | |
| 124 | 2 | 158601-51650 | JOINT, OVER FLOW | 1 | | | | | | | |
| 125 | 2 | 158552-51670 | JOINT, OVER FLOW | 1 | | | | | | | |

N:Old ←Yes/No→ New. Q:Old ←No/Yes→ New. R:Old ←Yes/Yes→ New. S:Old ←No/No→ New. W:Add. Z:Discontinued. F:Interchangeable by set. K:Q'ty Change

++ CONTINUE ++

Copyright (C) YANMAR GLOBAL CS CO., LTD. All RightsReserved.

# Fig.13. FUEL INJECTION PUMP



(A)=4TNV84T-BPCU
(B)=
(C)=
(D)=
(E)=
(F)=

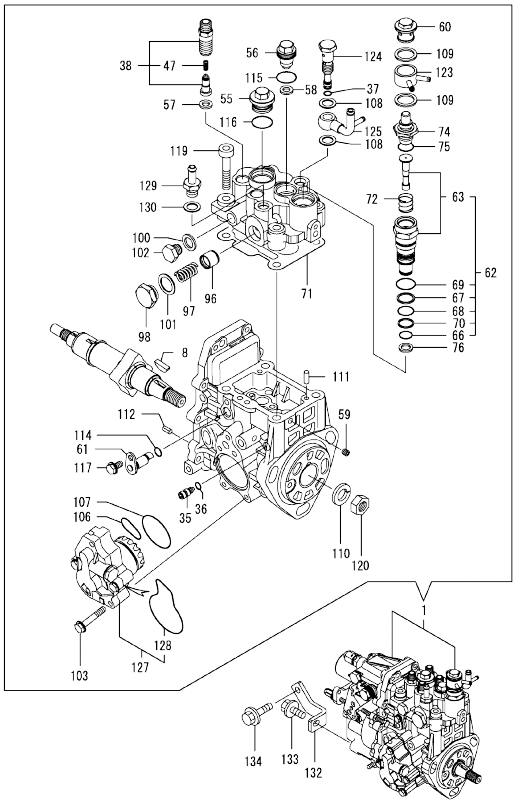


| No. | Lev. | Parts No. | Description | Q'ty (A) | (B) | (C) | (D) | (E) | (F) | I | R |
|---|---|---|---|---|---|---|---|---|---|---|---|
| 127 | 2 | 158552-52150 | PUMP ASSY, FUEL FEED | 1 | | | | | | | |
| 128 | 3 | 158552-52500 | O-RING | 1 | | | | | | | |
| 129 | 2 | 119934-59910 | JOINT, PIPE | 1 | | | | | | | |
| 130 | 2 | 22190-120002 | WASHER, SEAL 12 | 1 | | | | | | | |
| 132 | 1 | 129508-51250 | RETAINER, PUMP | 1 | | | | | | | |
| 133 | 1 | 26106-080202 | BOLT, M8X 20 PLATED | 1 | | | | | | | |
| 134 | 1 | 26106-080302 | BOLT, M8X 30 PLATED | 1 | | | | | | | |

Remarks
(1) GOVERNOR ASSY(FIG.14) IS INCORPORATED IN THIS FOP.CMP (REF.NO.1).

N:Old ←Yes/No→ New. Q:Old ←No/Yes→ New. R:Old ←Yes/Yes→ New. S:Old ←No/No→ New. W:Add. Z:Discontinued. F:Interchangeable by set. K:Q'ty Change

Copyright (C) YANMAR GLOBAL CS CO., LTD. All RightsReserved.

# Fig.14. GOVERNOR

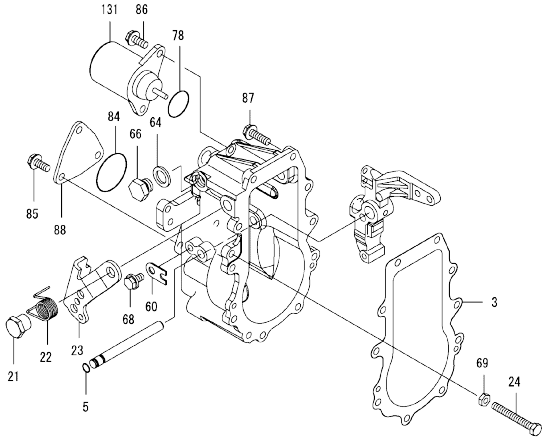


Remarks
* THIS FIGURE(GOVERNOR ASSY)IS INCORPORATED IN THE FUEL INJECTION PUMP ASSY(FIG.13).



(A)=4TNV84T-BPCU (D)=
(B)= (E)=
(C)= (F)=

| No. | Lev. | Parts No. | Description | Q'ty (A) | (B) | (C) | (D) | (E) | (F) | I | R |
|---|---|---|---|---|---|---|---|---|---|---|---|
| 3 | 2 | 158553-61050 | GASKET | 1 | | | | | | | |
| 5 | 2 | 129155-51280 | O-RING, S6 | 1 | | | | | | | |
| 21 | 2 | 129255-61410 | NUT, LOCK | 1 | | | | | | | |
| 22 | 2 | 119807-61420 | SPRING, RETURN | 1 | | | | | | | |
| 23 | 2 | 158552-61441 | LEVER, REGULATOR | 1 | | | | | | | |
| 24 | 2 | 129155-61460 | BOLT, IDLE | 1 | | | | | | | |
| 60 | 2 | 119660-61901 | RETAINER, SHAFT | 1 | | | | | | | |
| 64 | 2 | 22190-120002 | WASHER, SEAL 12 | 1 | | | | | | | |
| 66 | 2 | 23887-120002 | PLUG, 12 | 1 | | | | | | | |
| 66-1 | 2 | 158553-51930 | PLUG, M12 | 1 | | | | | | | R |
| | (A=EXXXXX) | | | | | | | | | | |
| 68 | 2 | 26106-060102 | BOLT, M6X 10 PLATED | 1 | | | | | | | |
| 69 | 2 | 26756-060002 | NUT, LOCK M6 | 1 | | | | | | | |
| 78 | 2 | 158552-61900 | O-RING | 1 | | | | | | | |
| 84 | 2 | 24341-000360 | O-RING, 1AS36.0 | 1 | | | | | | | |
| 85 | 2 | 26106-060142 | BOLT, M6X 14 PLATED | 3 | | | | | | | |
| 86 | 2 | 26106-060142 | BOLT, M6X 14 PLATED | 2 | | | | | | | |
| 87 | 2 | 26106-060202 | BOLT, M6X 20 PLATED | 10 | | | | | | | |
| 88 | 2 | 158563-61060 | COVER, GOVERNOR CASE | 1 | | | | | | | |
| 131 | 2 | 119653-77950 | SOLENOID, STOP | 1 | | | | | | | |

N:Old ←Yes/No→ New. Q:Old ←No/Yes→ New. R:Old ←Yes/Yes→ New. S:Old ←No/No→ New. W:Add. Z:Discontinued. F:Interchangeable by set. K:Q'ty Change

Copyright (C) YANMAR GLOBAL CS CO., LTD. All RightsReserved.

# Fig.15. FUEL INJECTION VALVE



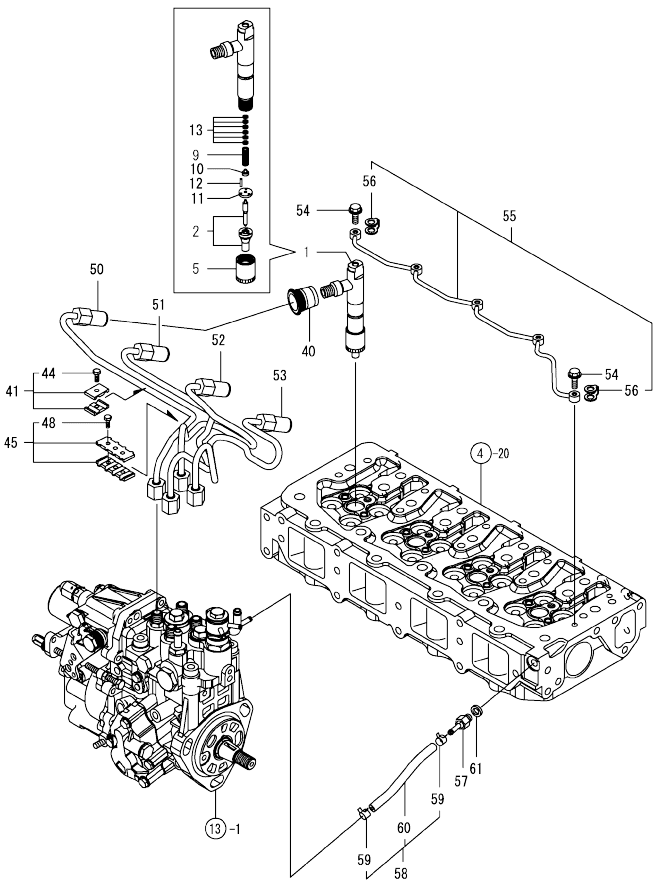


(A)=4TNV84T-BPCU (D)=
(B)= (E)=
(C)= (F)=

| No. | Lev. | Parts No. | Description | Q'ty (A) | (B) | (C) | (D) | (E) | (F) | I | R |
|---|---|---|---|---|---|---|---|---|---|---|---|
| 1 | 1 | 729530-53100 | VALVE ASSY,INJECTION | 4 | | | | | | | |
| 2 | 2 | 129937-53000 | VALVE ASSY,INJECTION | 4 | | | | | | | |
| 5 | 2 | 114250-53080 | NUT, NOZZLE D16.95 | 4 | | | | | | | |
| 9 | 2 | 114250-53120 | SPRING, NOZZLE | 4 | | | | | | | |
| 10 | 2 | 114250-53130 | SEAT, SPRING | 4 | | | | | | | |
| 11 | 2 | 114250-53140 | PLATE | 4 | | | | | | | |
| 12 | 2 | 114250-53210 | PIN | 8 | | | | | | | |
| 13 | 2 | 119803-53400 | SHIM SET | 4 | | | | | | | |
| 40 | 1 | 123907-11601 | SEAL | 4 | | | | | | | |
| 41 | 1 | 119305-59120 | RETAINER, PIPE | 2 | | | | | | | |
| 44 | 2 | 129150-59131 | BOLT, M4X14 | 2 | | | | | | | |
| 45 | 1 | 129550-59120 | RETAINER, PIPE | 1 | | | | | | | |
| 48 | 2 | 129150-59131 | BOLT, M4X14 | 2 | | | | | | | |
| 50 | 1 | 129508-59910 | PIPE ASSY, INJECTION | 1 | | | | | | | |
| 51 | 1 | 129508-59920 | PIPE ASSY, INJECTION | 1 | | | | | | | |
| 52 | 1 | 129508-59930 | PIPE ASSY, INJECTION | 1 | | | | | | | |
| 53 | 1 | 129508-59940 | PIPE ASSY, INJECTION | 1 | | | | | | | |
| 54 | 1 | 123907-59540 | BOLT, PIPE JOINT M6 | 5 | | | | | | | |
| 55 | 1 | 129508-59550 | PIPE ASSY, RETURN | 1 | | | | | | | |
| 56 | 2 | 123907-59550 | GASKET | 5 | | | | | | | |
| 57 | 1 | 123907-59560 | JOINT | 1 | | | | | | | |
| 58 | 1 | 129508-59570 | PIPE ASSY, RETURN | 1 | | | | | | | |
| 59 | 2 | 124722-59050 | CLIP, HOSE 9 | 2 | | | | | | | |
| 60 | 2 | 129508-59510 | PIPE, FUEL RETURN | 1 | | | | | | | |
| 61 | 1 | 22190-080002 | WASHER, SEAL 6 | 1 | | | | | | | |

N:Old ◄Yes/No► New. Q:Old ◄No/Yes► New, R:Old ◄Yes/Yes► New, S:Old ◄No/No► New, W:Add, Z:Discontinued, F:Interchangeable by set, K:Q'ty Change

Copyright (C) YANMAR GLOBAL CS CO., LTD. All RightsReserved.

# Fig.16. GASKET SET



(A)=4TNV84T-BPCU
(B)=
(C)=
(D)=
(E)=
(F)=

| No. | Lev. | Parts No. | Description | Q'ty (A) | (B) | (C) | (D) | (E) | (F) | I | R |
|---|---|---|---|---|---|---|---|---|---|---|---|
| 1 | 1 | 729508-92850 | GASKET SET | 1 | | | | | | | 1 |
| 2 | 2 | 129508-01330 | GASKET, HEAD | 1 | | | | | | | |
| 3 | 2 | 119609-32040 | O-RING, P16 | 2 | | | | | | | |
| 4 | 2 | 121850-51960 | O-RING | 1 | | | | | | | |
| 5 | 2 | 24311-000320 | O-RING, 1AP32.0 | 2 | | | | | | | |
| 6 | 2 | 24341-000240 | O-RING, 1AS24.0 | 1 | | | | | | | |
| 7 | 2 | 22190-220002 | WASHER, SEAL 22 | 1 | | | | | | | |
| 8 | 2 | 119717-11340 | SEAL, VALVE STEM | 8 | | | | | | | |
| 9 | 2 | 119717-11350 | SEAL, VALVE STEM | 8 | | | | | | | |
| 10 | 2 | 119802-11870 | PROTECTOR, NOZZLE | 4 | | | | | | | |
| 11 | 2 | 119625-11880 | SEAT, NOZZLE | 4 | | | | | | | |
| 12 | 2 | 129508-11310 | GASKET, BONNET | 1 | | | | | | | |
| 13 | 2 | 24311-000120 | O-RING, 1AP12.0 | 7 | | | | | | | |
| 14 | 2 | 129508-12110 | GASKET, MANIFOLD | 1 | | | | | | | |
| 15 | 2 | 129150-77511 | GASKET | 1 | | | | | | | |
| 16 | 2 | 129550-13110 | GASKET | 1 | | | | | | | |
| 17 | 2 | 129508-18080 | GASKET | 1 | | | | | | | |
| 18 | 2 | 129508-18090 | GASKET | 1 | | | | | | | |
| 19 | 2 | 129150-35042 | GASKET | 1 | | | | | | | |
| 20 | 2 | 129150-35111 | GASKET | 1 | | | | | | | |
| 21 | 2 | 22190-080002 | WASHER, SEAL 6 | 7 | | | | | | | |
| 22 | 2 | 22190-100002 | WASHER, SEAL 10 | 2 | | | | | | | |
| 23 | 2 | 23414-100000 | GASKET, 10X1.0 | 2 | | | | | | | |
| 24 | 2 | 24316-000160 | O-RING, 4DP16.0 | 1 | | | | | | | |
| 25 | 2 | 129486-42021 | GASKET, WATER PUMP | 1 | | | | | | | |
| 26 | 2 | 129486-42140 | O-RING, G30 | 1 | | | | | | | |
| 27 | 2 | 124395-49840 | GASKET | 1 | | | | | | | |
| 28 | 2 | 23414-080000 | GASKET, 8X1.0 | 1 | | | | | | | |
| 29 | 2 | 129150-49811 | GASKET, THERMOSTAT | 1 | | | | | | | |
| 30 | 2 | 129795-49551 | GASKET | 1 | | | | | | | |
| 31 | 2 | 124465-44950 | GASKET, 16 | 2 | | | | | | | |
| 32 | 2 | 123907-59550 | GASKET | 5 | | | | | | | |
| 33 | 2 | 129100-77510 | GASKET, AIR HEATER | 1 | | | | | | | |
| 34 | 2 | 129150-32020 | GASKET, PUMP | 1 | | | | | | | |
| 35 | 1 | 129400-92420 | FLEX HORN | 1 | | | | | | | 1 |
| 36 | 1 | 977770-1207F | GASKET.LIQUID | 1 | | | | | | | 1 |
| 37 | 1 | 114110-07760 | LABEL, FUEL OIL | 1 | | | | | | | |
| 38 | 1 | 119129-77920 | TIMER | 1 | | | | | | | |

Remarks
(1) OPTIONAL PART.

N:Old $\frac{\text{Yes}}{\text{No}}$ New. Q:Old $\frac{\text{No}}{\text{Yes}}$ New. R:Old $\frac{\text{Yes}}{\text{Yes}}$ New. S:Old $\frac{\text{No}}{\text{No}}$ New. W:Add. Z:Discontinued. F:Interchangeable by set. K:Q'ty Change

Copyright (C) YANMAR GLOBAL CS CO., LTD. All RightsReserved.

0CW10-M48901 4TNV84T-BPCU

# Fig.17. FUEL LINE

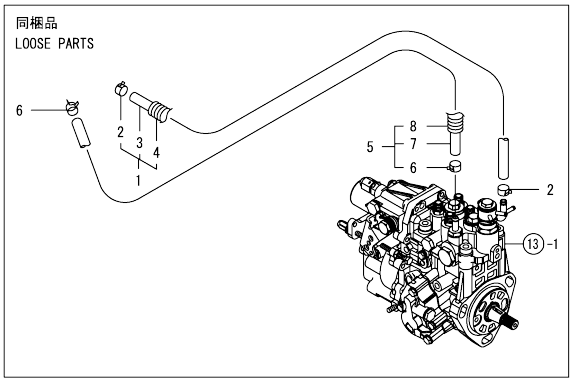




(A)=4TNV84T-BPCU (D)=
(B)= (E)=
(C)= (F)=

| No. | Lev. | Parts No. | Description | Q'ty (A) | (B) | (C) | (D) | (E) | (F) | I | R |
|---|---|---|---|---|---|---|---|---|---|---|---|
| 1 | 1 | 129630-59010 | PIPE ASSY, FUEL | 1 | | | | | | | |
| 2 | 2 | 124766-59050 | CLIP, HOSE 12 | 2 | | | | | | | |
| 3 | 2 | 129961-59110 | TUBE, CORRUGATED | 1 | | | | | | | |
| 4 | 2 | 105025-59560 | PIPE, FUEL | 1 | | | | | | | |
| 5 | 1 | 129972-59010 | PIPE ASSY, FUEL L420 | 1 | | | | | | | |
| 6 | 2 | 124766-59050 | CLIP, HOSE 12 | 2 | | | | | | | |
| 7 | 2 | 129972-59090 | PIPE, FUEL D13X420 | 1 | | | | | | | |
| 8 | 2 | 129950-59221 | TUBE, CORRUGATED | 1 | | | | | | | |

N:Old ◄Yes/No► New. Q:Old ◄No/Yes► New. R:Old ◄Yes/Yes► New. S:Old ◄No/No► New. W:Add. Z:Discontinued. F:Interchangeable by set. K:Q'ty Change

Copyright (C) YANMAR GLOBAL CS CO., LTD. All RightsReserved.

# Parts No. Index


| Parts No. | Fig. No. | Ref. No. |
|---|---|---|
| 105025-59560 | 17 | 4 |
| 114110-07760 | 16 | 37 |
| 114250-39450 | 11 | 1 |
| 114250-53080 | 15 | 5 |
| 114250-53120 | 15 | 9 |
| 114250-53130 | 15 | 10 |
| 114250-53140 | 15 | 11 |
| 114250-53210 | 15 | 12 |
| 119005-35160 | 10 | 28 |
| 119129-77920 | 16 | 38 |
| 119131-18320 | 6 | 5 |
| 119305-59120 | 15 | 41 |
| 119609-32040 | 2 | 9 |
| | 16 | 3 |
| 119625-11880 | 4 | 42 |
| | 16 | 11 |
| 119640-01640 | 3 | 4 |
| 119640-61400 | 4 | 63 |
| 119653-77950 | 14 | 131 |
| 119660-61901 | 14 | 60 |
| 119717-11190 | 4 | 32 |
| 119717-11340 | 4 | 33 |
| | 16 | 8 |
| 119717-11350 | 4 | 34 |
| | 16 | 9 |
| 119717-11800 | 4 | 40 |
| 119802-01561 | 2 | 5 |
| 119802-03070 | 4 | 52 |
| 119802-11870 | 4 | 41 |
| | 16 | 10 |
| 119802-13650 | 6 | 3 |
| 119802-13670 | 6 | 4 |
| 119802-13820 | 6 | 6 -1 |
| 119802-21660 | 9 | 8 |
| 119802-25071 | 7 | 13 |
| 119802-25101 | 7 | 10 |
| 119802-25901 | 7 | 16 |
| 119802-39500 | 11 | 5 |
| 119802-49113 | 12 | 10 |
| 119802-49730 | 12 | 34 |
| 119802-51090 | 13 | 8 |
| 119802-51560 | 13 | 56 |
| 119802-51590 | 13 | 62 |
| 119802-51600 | 13 | 63 |
| 119802-51680 | 13 | 67 |
| 119802-51690 | 13 | 68 |
| 119803-01520 | 2 | 4 |
| 119803-21200 | 9 | 4 |
| 119803-25050 | 7 | 9 |
| 119803-53400 | 15 | 13 |

| Parts No. | Fig. No. | Ref. No. |
|---|---|---|
| 119807-61420 | 14 | 22 |
| 119934-01800 | 2 | 3 |
| 119934-59910 | 13 | 129 |
| 119940-59130 | 10 | 37 |
| 121023-01551 | 2 | 19 |
| 121111-21501 | 9 | 12 |
| | | 36 |
| 121252-39150 | 11 | 3 |
| 121450-42450 | 12 | 30 |
| 121520-34810 | 10 | 17 |
| 121550-23200 | 9 | 24 |
| 121850-21680 | 9 | 10 |
| 121850-42410 | 12 | 8 |
| 121850-51960 | 2 | 10 |
| | 16 | 4 |
| 123901-39820 | 11 | 17 |
| 123907-03100 | 4 | 55 |
| 123907-03110 | 4 | 56 |
| 123907-03120 | 4 | 57 |
| 123907-03140 | 4 | 58 |
| 123907-11550 | 4 | 19 |
| 123907-11601 | 15 | 40 |
| 123907-11830 | 4 | 38 |
| 123907-59540 | 15 | 54 |
| 123907-59550 | 15 | 56 |
| | 16 | 32 |
| 123907-59560 | 15 | 57 |
| 124060-01050 | 1 | 11 |
| 124070-13300 | 11 | 15 |
| 124085-35350 | 10 | 23 -2 |
| 124160-01751 | 2 | 6 |
| | 4 | 49 |
| 124160-01910 | 1 | 12 |
| | | 13 |
| 124160-11360 | 4 | 67 |
| 124160-39140 | 11 | 2 |
| 124223-39900 | 11 | 6 |
| 124240-01871 | 2 | 7 |
| 124395-49840 | 12 | 17 |
| | 16 | 27 |
| 124465-44950 | 12 | 31 |
| | 16 | 31 |
| 124722-59050 | 12 | 35 |
| | | 38 |
| | 15 | 59 |
| 124766-59050 | 17 | 2 |
| | | 6 |
| 129001-01250 | 1 | 4 |
| 129001-02931 | 1 | 29 |
| 129001-11340 | 4 | 61 |

| Parts No. | Fig. No. | Ref. No. |
|---|---|---|
| 129004-22500 | 9 | 15 |
| 129004-22950 | 9 | 32 |
| 129004-34802 | 10 | 16 |
| 129004-42040 | 12 | 15 |
| 129004-49610 | 12 | 32 |
| 129004-49620 | 12 | 36 |
| 129004-49711 | 12 | 33 |
| 129004-49721 | 12 | 37 |
| 129005-59830 | 11 | 7 |
| 129006-35100 | 10 | 24 |
| | | 24 A |
| 129006-44480 | 10 | 29 |
| 129009-03050 | 5 | 14 -1 |
| 129009-11340 | 4 | 62 |
| 129100-01580 | 3 | 1 |
| | | 10 |
| | 9 | 2 |
| 129100-01640 | 3 | 11 |
| 129100-23910 | 9 | 27 |
| 129100-42051 | 12 | 3 |
| 129100-42121 | 12 | 4 |
| 129100-77501 | 5 | 8 |
| 129100-77510 | 5 | 10 |
| | 16 | 33 |
| 129103-49301 | 10 | 39 |
| 129120-77502 | 5 | 9 |
| 129150-01200 | 1 | 27 |
| 129150-02020 | 1 | 6 |
| 129150-02450 | 7 | 4 |
| 129150-02871 | 1 | 32 |
| 129150-02931 | 1 | 24 |
| 129150-02941 | 1 | 35 |
| 129150-03070 | 4 | 53 |
| 129150-11230 | 4 | 10 |
| | | 14 |
| 129150-11750 | 4 | 12 |
| | | 16 |
| | | 37 |
| 129150-14101 | 7 | 6 |
| 129150-14200 | 7 | 1 |
| 129150-14400 | 7 | 2 |
| 129150-23601 | 9 | 25 |
| 129150-23611 | 9 | 28 |
| 129150-25301 | 7 | 15 |
| 129150-32020 | 10 | 14 |
| | 16 | 34 |
| 129150-35042 | 10 | 18 |
| | 16 | 19 |
| 129150-35111 | 10 | 27 |
| | 16 | 20 |

| Parts No. | Fig. No. | Ref. No. |
|---|---|---|
| 129150-49811 | 12 | 26 |
| | 16 | 29 |
| 129150-59131 | 15 | 44 |
| | | 48 |
| 129150-77511 | 5 | 11 |
| | 16 | 15 |
| 129155-51280 | 14 | 5 |
| 129155-61460 | 14 | 24 |
| 129202-22300 | 9 | 19 |
| 129255-61410 | 14 | 21 |
| 129350-49530 | 12 | 27 |
| 129400-01730 | 3 | 2 |
| 129400-01770 | 3 | 3 |
| 129400-77501 | 5 | 8 -1 |
| 129400-92420 | 16 | 35 |
| 129403-13120 | 6 | 2 |
| 129403-42380 | 12 | 23 |
| 129410-03990 | 5 | 17 |
| 129417-33110 | 10 | 23 |
| 129417-33111 | 10 | 23 -1 |
| 129417-35150 | 10 | 26 |
| 129418-18320 | 8 | 5 |
| 129418-32000 | 10 | 1 |
| 129436-35070 | 10 | 19 -1 |
| 129436-35091 | 10 | 19 |
| 129457-49801 | 12 | 25 |
| 129486-01670 | 3 | 14 |
| 129486-42021 | 12 | 14 |
| | 16 | 25 |
| 129486-42140 | 12 | 16 |
| | 16 | 26 |
| 129508-01330 | 1 | 28 |
| | 16 | 2 |
| 129508-03010 | 4 | 51 |
| 129508-11100 | 4 | 28 |
| 129508-11110 | 4 | 29 |
| 129508-11130 | 4 | 30 |
| 129508-11180 | 4 | 31 |
| 129508-11241 | 4 | 3 |
| 129508-11250 | 4 | 4 |
| 129508-11260 | 4 | 6 |
| 129508-11270 | 4 | 7 |
| 129508-11280 | 4 | 8 |
| 129508-11310 | 4 | 60 |
| | 16 | 12 |
| 129508-11650 | 4 | 9 |
| 129508-11660 | 4 | 13 |
| 129508-11820 | 4 | 39 |
| 129508-11900 | 4 | 43 |
| 129508-11920 | 4 | 17 |

# Parts No. Index

| Parts No. | Fig. No. | Ref. No. |
|---|---|---|
| 129508-12100 | 5 | 2 |
| 129508-12110 | 5 | 3 |
| | 16 | 14 |
| 129508-14580 | 7 | 3 |
| 129508-18080 | 8 | 2 |
| | 16 | 17 |
| 129508-18090 | 8 | 4 |
| | 16 | 18 |
| 129508-22080 | 9 | 13 |
| 129508-22900 | 9 | 30 |
| 129508-33010 | 10 | 21 |
| 129508-33031 | 10 | 21 -1 |
| 129508-33050 | 10 | 22 |
| 129508-33060 | 10 | 22 -1 |
| 129508-35100 | 10 | 24 -1 |
| 129508-35150 | 10 | 26 A |
| 129508-39450 | 11 | 4 |
| 129508-39600 | 11 | 16 |
| 129508-42001 | 12 | 1 |
| 129508-49030 | 10 | 30 |
| 129508-49040 | 10 | 34 |
| 129508-51250 | 13 | 132 |
| 129508-59510 | 15 | 60 |
| 129508-59550 | 15 | 55 |
| 129508-59570 | 15 | 58 |
| 129508-59910 | 15 | 50 |
| 129508-59920 | 15 | 51 |
| 129508-59930 | 15 | 52 |
| 129508-59940 | 15 | 53 |
| 129509-03050 | 5 | 14 |
| 129509-03080 | 5 | 15 |
| 129509-03090 | 5 | 16 |
| 129509-11700 | 4 | 20 |
| 129509-21000 | 9 | 1 |
| 129509-51390 | 13 | 38 |
| 129550-13110 | 6 | 1 |
| | 16 | 16 |
| 129550-59120 | 15 | 45 |
| 129553-39650 | 11 | 27 |
| 129567-18010 | 8 | 1 |
| 129584-11350 | 4 | 50 |
| 129584-12060 | 5 | 1 |
| 129630-59010 | 17 | 1 |
| 129659-21410 | 9 | 11 |
| 129672-11510 | 4 | 35 |
| 129688-01780 | 3 | 3 -1 |
| 129693-44310 | 6 | 6 |
| 129792-39410 | 11 | 21 |
| 129795-01780 | 3 | 13 |
| 129795-01950 | 2 | 8 |

| Parts No. | Fig. No. | Ref. No. |
|---|---|---|
| 129795-02412 | 1 | 9 |
| 129795-21661 | 9 | 9 |
| 129795-49551 | 12 | 28 |
| | 16 | 30 |
| 129900-07900 | 4 | 1 |
| 129907-03070 | 4 | 54 |
| 129907-11950 | 4 | 44 |
| 129916-49740 | 12 | 11 |
| 129937-53000 | 15 | 2 |
| 129950-59221 | 17 | 8 |
| 129961-59110 | 17 | 3 |
| 129972-59010 | 17 | 5 |
| 129972-59090 | 17 | 7 |
| 158552-51151 | 7 | 17 |
| 158552-51571 | 13 | 57 |
| | | 58 |
| 158552-51580 | 13 | 61 |
| 158552-51600 | 13 | 71 |
| 158552-51670 | 13 | 125 |
| 158552-51781 | 13 | 97 |
| 158552-52150 | 13 | 127 |
| 158552-52310 | 13 | 106 |
| 158552-52400 | 13 | 107 |
| 158552-52500 | 13 | 128 |
| 158552-61441 | 14 | 23 |
| 158552-61900 | 14 | 78 |
| 158553-51551 | 13 | 123 |
| 158553-51630 | 13 | 72 |
| 158553-51640 | 13 | 74 |
| 158553-51660 | 13 | 75 |
| 158553-51670 | 13 | 66 |
| 158553-51680 | 13 | 76 |
| 158553-51770 | 13 | 103 |
| 158553-51930 | 13 | 102 -1 |
| | 14 | 66 -1 |
| 158553-61050 | 14 | 3 |
| 158557-51570 | 13 | 59 |
| 158563-51281 | 13 | 36 |
| | | 37 |
| 158563-51330 | 13 | 47 |
| 158563-61060 | 14 | 88 |
| 158600-51270 | 13 | 35 |
| 158601-51550 | 13 | 55 |
| 158601-51570 | 13 | 60 |
| 158601-51650 | 13 | 124 |
| 158601-51770 | 13 | 96 |
| 158601-51790 | 13 | 98 |
| 171008-03990 | 10 | 31 |
| | | 35 |
| 171051-01921 | 1 | 5 |

| Parts No. | Fig. No. | Ref. No. |
|---|---|---|
| 171056-49120 | 10 | 41 |
| 22190-080002 | 2 | 11 |
| | 11 | 8 |
| | | 10 |
| | 15 | 61 |
| | 16 | 21 |
| 22190-100002 | 11 | 11 |
| | 16 | 22 |
| 22190-120002 | 13 | 100 |
| | | 108 |
| | | 130 |
| | 14 | 64 |
| 22190-180002 | 13 | 101 |
| | | 109 |
| 22190-220002 | 3 | 6 |
| | 16 | 7 |
| 22217-140000 | 7 | 18 |
| | 13 | 110 |
| 22252-000260 | 9 | 20 |
| 22312-050140 | 13 | 111 |
| 22351-030010 | 9 | 7 |
| | 11 | 28 |
| 22351-050010 | 13 | 112 |
| 22351-060012 | 4 | 45 |
| 22512-070140 | 7 | 7 |
| | 9 | 5 |
| 22857-500100 | 4 | 64 |
| | | 65 |
| | | 66 |
| 23000-025000 | 11 | 18 |
| 23000-048000 | 5 | 4 |
| 23000-060000 | 5 | 5 |
| 23080-015000 | 10 | 33 |
| | | 38 |
| 23414-080000 | 12 | 18 |
| | 16 | 28 |
| 23414-100000 | 11 | 12 |
| | 16 | 23 |
| 23857-030000 | 11 | 9 |
| 23876-010000 | 12 | 12 |
| 23876-020000 | 4 | 26 |
| | 12 | 13 |
| 23887-120002 | 13 | 102 |
| | 14 | 66 |
| 24311-000070 | 13 | 114 |
| 24311-000120 | 4 | 46 |
| | | 68 |
| | 16 | 13 |
| 24311-000320 | 2 | 12 |
| | 4 | 69 |

| Parts No. | Fig. No. | Ref. No. |
|---|---|---|
| 24311-000320 | 16 | 5 |
| 24316-000160 | 11 | 19 |
| | 16 | 24 |
| 24341-000240 | 2 | 20 |
| | 16 | 6 |
| 24341-000360 | 14 | 84 |
| 24356-010180 | 13 | 115 |
| 24356-010200 | 13 | 69 |
| | | 116 |
| 24372-000150 | 13 | 70 |
| 26106-060102 | 13 | 117 |
| | 14 | 68 |
| 26106-060122 | 12 | 24 |
| 26106-060142 | 14 | 85 |
| | | 86 |
| 26106-060162 | 2 | 21 |
| | 11 | 20 |
| 26106-060202 | 14 | 87 |
| 26106-080122 | 11 | 13 |
| | 12 | 19 |
| 26106-080142 | 7 | 8 |
| 26106-080162 | 2 | 13 |
| | | 14 |
| | 3 | 7 |
| | 4 | 2 |
| | 12 | 20 |
| 26106-080202 | 5 | 6 |
| | 10 | 40 |
| | 13 | 133 |
| 26106-080222 | 12 | 29 |
| 26106-080252 | 3 | 8 |
| | 4 | 47 |
| 26106-080302 | 2 | 15 |
| | 13 | 134 |
| 26106-080352 | 3 | 15 |
| | 10 | 20 |
| 26106-080402 | 7 | 14 |
| 26106-080452 | 3 | 9 |
| | | 9 -1 |
| | 12 | 21 |
| 26106-080502 | 3 | 16 |
| | 4 | 48 |
| 26106-080552 | 2 | 16 |
| | 5 | 12 |
| | 10 | 20 -1 |
| 26106-080602 | 5 | 13 |
| | 12 | 22 |
| 26106-080802 | 5 | 7 |
| 26106-080852 | 2 | 17 |
| 26226-080352 | 4 | 18 |

# Parts No. Index

| Parts No. | Fig. No. | Ref. No. |
|---|---|---|
| 26306-080002 | 2 | 18 |
| | 8 | 3 |
| 26366-060002 | 11 | 14 |
| 26450-060252 | 10 | 15 |
| 26450-080452 | 13 | 119 |
| 26756-060002 | 14 | 69 |
| 26776-140002 | 7 | 19 |
| | 13 | 120 |
| 27241-120000 | 1 | 14 |
| 27241-300000 | 1 | 10 |
| 27241-400000 | 4 | 27 |
| 719803-01500 | 2 | 1 |
| 729402-23100 | 9 | 21 |
| 729508-01560 | 1 | 1 |
| 729508-92850 | 16 | 1 |
| 729530-53100 | 15 | 1 |
| 729584-51310 | 13 | 1 |
| 977770-1207F | 16 | 36 |

| Parts No. | Fig. No. | Ref. No. |
|---|---|---|

| Parts No. | Fig. No. | Ref. No. |
|---|---|---|

| Parts No. | Fig. No. | Ref. No. |
|---|---|---|