YANMAR

PARTS CATALOG

0CR10-M60800EN

Last update Mar., 2016

PREFACE

1.This Parts Catalog carries all parts incorporated in YANMAR Model 4TNV84T-DMW engine manufactured since April, 2005.

2.Each illustration corresponds to the parts list on the following page.

3.When ordering parts,clearly write down the engine model and serial number,as well as the name and number of each part in your order sheet. This will help insure reliable delivery of the parts you have ordered.

Directions for the Parts Catalog.

1.The parts stipulated in this Parts Catalog are not necessarily standard equipped parts.
2.Parts may change without prior notice.
3.The following is an example of the Parts Catalog format.

0CF10-G21601 29. FUEL INJECTION PUMP(W/BOOST)

(A)=4JH-DT
(B)=4JH-DTZ
(C)=4JH-DTZP
(D)=4JH-DTZA
(E)=4JH-DTZY
(F)=

① REF.	② LEV.	PARTS NO.	DESCRIPTION	Q'TY (A)	(B)	(C)	(D)	(E)	(F)	③ I	⑤ R
1	1	729595-51390	FUEL INJECTION PUMP	1	1	1	1	1			1
1-1	1	729595-51391	FUEL INJECTION PUMP	1	1	1	1	1		N	1
	(A=E00185)	(B=E00200)									
3	2	26022-060162	SCREW M 6X 16	9	9	9	9	9			
3-1 ④	2	26022-060162	SCREW M 6X 16	4	4	4	4	4		K	
	(A=E00156)	(B=E00156)	(C=E00156) (D=E00156)	(E=E00156)							
4	2	129470-51040	CAMSHAFT	1	1	1	1	1			
5	2	122710-51050	BEARING, ROLLER	2	2	2	2	2			
6	2	129470-51060	RETAINER	1	1	1	1	1			

Remarks
(1) BOOST COMPEMSATOR TYPE. OPTIONAL
PART, TO E00155,(4JH-DT, 4JH-DTZ

① Ref. No.

The Ref. No. listed may not be in accordance with the illustration Ref. No.

(Ex.) Illustration No. 1 List Ref No. 1 (Before change) → 1- 1 (After change)

For interchangeable symbols N, R and K, illustrations for new parts may be abbreviated.

② Lev. (Level)

Level indication
The numbers below indicate the level of relativity towards the main part.
1 ----- Main parts (Assembly parts)
2 ----- Sub component included in " 1 ".
3 ----- Sub component included in " 2 ".
Note) Parts that are not for sale are partially illustrated but not listed.

③ Interchangeability Mark

When a part change takes place, one of the following interchangeability symbols is indicated beside the part.

Symbol	Interchangeability	Contents note
N	Old ← Yes / No → New	New Part is interchangeable for Old Part but Old Part is not interchangeable for New Part.
Q	Old ← No / Yes → New	New Part is not interchangeable for Old Part but Old Part is interchangeable for New Part.
R	Old ← Yes / Yes → New	New/ Old Parts are both interchangeable.
S	Old ← No / No → New	New/ Old Parts are both not interchangeable.
W		Part newly added.
Z		Part discontinued.
F		Not interchangeable by a single part but interchangeable together with related parts.
K		Changes only for used parts quantities.

④ Effective Machine No.

When a part changes, the effective Machine No. will be indicated in the (A)-(F) column.

Product Symbol	Product No.	Product Symbol	Product No.
C	Clutch No. Compressor No.	F	Machine No. (Agricultural Equip.)
D	Drive No.	M	Machine No.
E	Engine No.		

Note 1) A date may follow the symbol. (Ex.) 1996.01
Note 2) " XXXXX " and " ZZZZZ " are for parts that could not be predicted or for engine models that could not be identified.
Note 3) (A=E00185) is the E (Engine Serial Number) for the column (A) model (in this case 4JH-DT) after the parts design change.

⑤ Remarks Mark

Figures or alphabets (symbols) are entered in the remarks column.
The comments (remarks) on parts that are indicated at the bottom of the illustration are the same symbols as those stated above.

Contents

0CR10-M60800

Fig. No.	Fig. Name
ENGINE SECTION (4TNV84T-DMW)	
1.	CYLINDER BLOCK
2.	GEAR HOUSING
3.	FLYWHEEL HOUSING & OIL SUMP
4.	CYLINDER HEAD & BONNET
5.	SUCTION MANIFOLD
6.	EXHAUST MANIFOLD & SILENCER
7.	CAMSHAFT & DRIVING GEAR
8.	TURBINE
9.	CRANKSHAFT & PISTON
10.	LUB. OIL SYSTEM
11.	LUB. OIL LINE
12.	COOLING WATER SYSTEM
13.	FUEL INJECTION PUMP
14.	GOVERNOR
15.	FUEL INJECTION VALVE
16.	FUEL LINE
17.	STARTING MOTOR
18.	GENERATOR
19.	GASKET SET

Fig.1. CYLINDER BLOCK

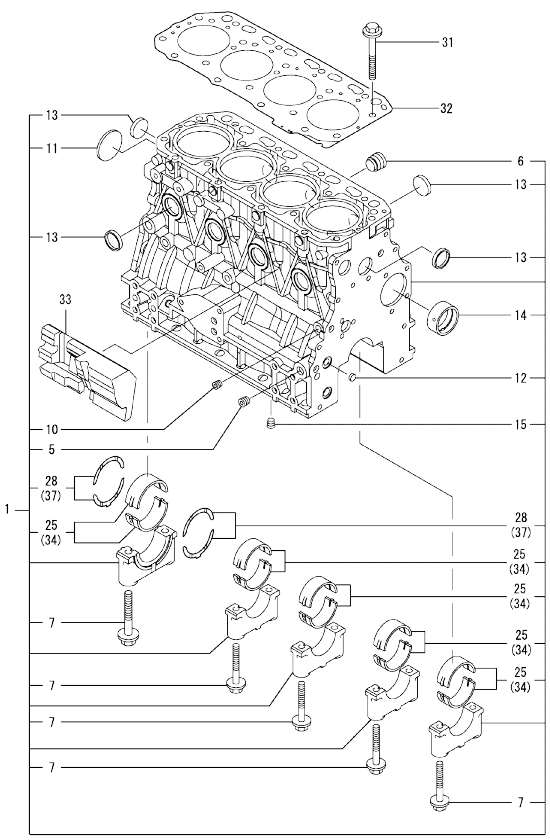

(A)=4TNV84T-DMW (D)=
(B)= (E)=
(C)= (F)=

No.	Lev.	Parts No.	Description	Q'ty (A)	(B)	(C)	(D)	(E)	(F)	I	R
1	1	729508-01560	BLOCK ASSY, CYLINDER	1							
5	2	124160-01910	PLUG, PT1/4	2							
6	2	171051-01921	PLUG, NPTF1	1							
7	2	129150-02020	BOLT, METAL CAP	10							
10	2	124060-01050	PLUG, PT1/8	1							
11	2	129001-01250	PLUG, 50	1							
12	2	27241-120000	PLUG, 12	2							
13	2	27241-300000	PLUG 30	8							
14	2	129795-02411	BUSH, CAMSHAFT	1							
15	2	124160-01910	PLUG, PT1/4	1							
25	2	129001-02930	BEARING, MAIN	5							3
28	2	129150-02930	BEARING, THRUST	2							
31	1	129150-01200	BOLT, HEAD	18							
32	1	129508-01330	GASKET, HEAD	1							
33	1	129004-01190	SPACER	1							
34	1	129150-02870	BEARING, 0.25 US	5							1
37	1	129150-02940	BEARING, THRUST 0.25	1							2

Remarks
(1) UNDER-SIZE(U.S=0.25)PART.
(2) OVER-SIZE(O.S=0.25)PART.
(3) REPAIR PART.

N:Old $\frac{\text{Yes}}{\text{No}}$ New. Q:Old $\frac{\text{No}}{\text{Yes}}$ New. R:Old $\frac{\text{Yes}}{\text{Yes}}$ New. S:Old $\frac{\text{No}}{\text{No}}$ New. W:Add. Z:Discontinued. F:Interchangeable by set. K:Q'ty Change

Copyright (C) YANMAR CO., LTD. All RightsReserved.

Fig.2. GEAR HOUSING

(A)=4TNV84T-DMW
(B)=
(C)=
(D)=
(E)=
(F)=

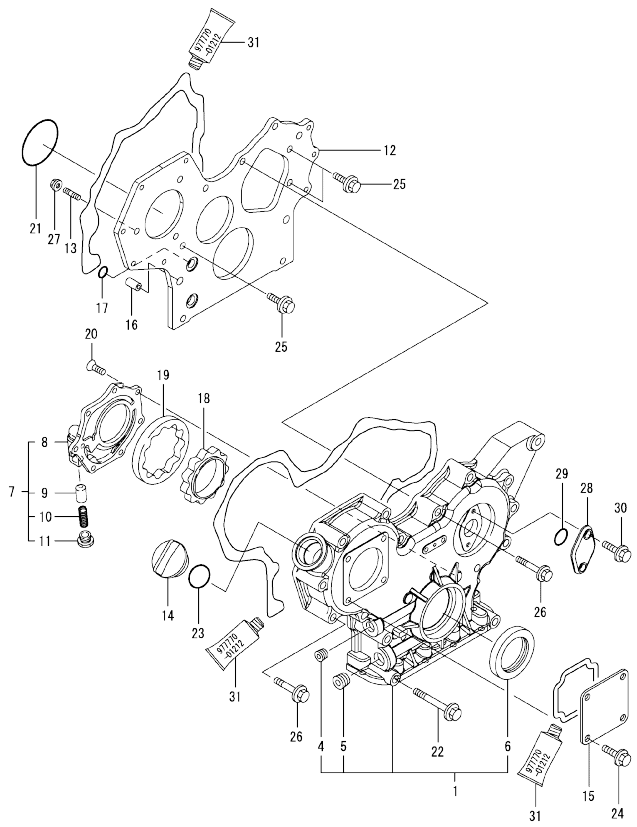

No.	Lev.	Parts No.	Description	Q'ty (A)	(B)	(C)	(D)	(E)	(F)	I	R
1	1	729508-01500	CASE ASSY, GEAR	1							
4	2	23876-030000	PLUG, R03	1							
5	2	23876-040000	PLUG, R04	1							
6	2	129795-01800	SEAL, OIL	1							
7	1	119802-32100	COVER ASSY	1							
8	2	119802-32070	COVER	1							
9	2	129900-32130	VALVE, RELIEF	1							
10	2	129418-32320	SPRING	1							
11	2	129001-32330	PLUG	1							
12	1	119802-01520	FLANGE, GEAR CASE	1							
13	1	119802-01560	STUD, M8X25	3							
14	1	124160-01751	COVER, FILLER	1							
15	1	124240-01871	COVER	1							
16	1	129795-01950	PIPE, KNOCK L=18	2							
17	1	119609-32040	O-RING, P16	4							
18	1	129508-32111	ROTOR, INNER	1							
19	1	129508-32120	ROTOR, OUTER	1							
20	1	119802-32130	SCREW, M6X16	7							
21	1	121850-51960	O-RING	1							
22	1	129001-91841	BOLT, M8X85	3							
23	1	24311-000320	O-RING, 1AP32.0	1							
24	1	26106-080162	BOLT, M8X 16 PLATED	4							
25	1	26106-080162	BOLT, M8X 16 PLATED	3							
26	1	26106-080552	BOLT, M8X 55 PLATED	12							
27	1	26306-080002	NUT, M8	3							
28	1	121023-01550	COVER	1							
29	1	24341-000240	O-RING, 1AS24.0	1							
30	1	26106-060162	BOLT, M6X 16 PLATED	2							
31	1	977770-01212	GASKET, LIQUID	1							1

Remarks
(1) OPTIONAL PART.

N:Old $\xleftarrow[\text{No}]{\text{Yes}}$ New. Q:Old $\xleftarrow[\text{Yes}]{\text{No}}$ New. R:Old $\xleftarrow[\text{Yes}]{\text{Yes}}$ New. S:Old $\xleftarrow[\text{No}]{\text{No}}$ New. W:Add. Z:Discontinued. F:Interchangeable by set. K:Q'ty Change

Copyright (C) YANMAR CO., LTD. All RightsReserved.

Fig.3. FLYWHEEL HOUSING & OIL SUMP

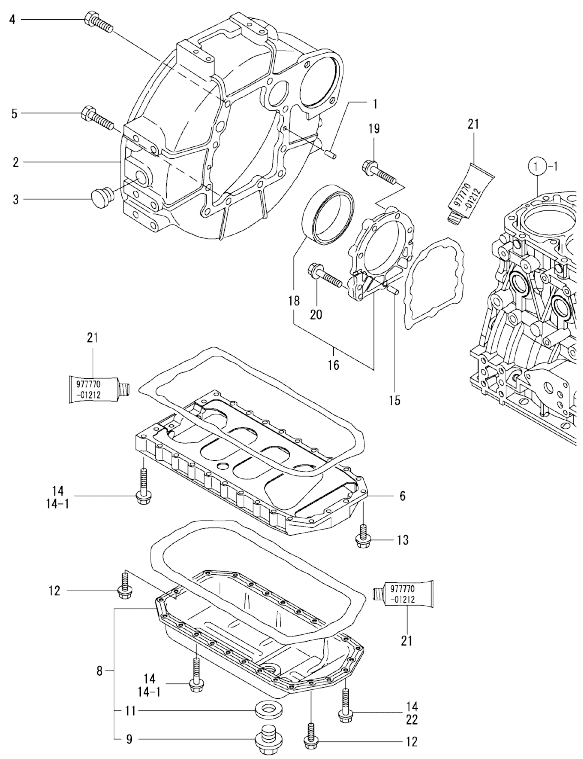

(A)=4TNV84T-DMW
(B)=
(C)=
(D)=
(E)=
(F)=

No.	Lev.	Parts No.	Description	Q'ty (A)	(B)	(C)	(D)	(E)	(F)	I	R
1	1	129100-01580	PIN, M8X16	2							
2	1	129612-01600	HOUSING, FLYWHEEL	1							
3	1	119620-01750	CAP	1							
4	1	26206-100252	BOLT, M10X 25 PLATED	6							
5	1	26206-100302	BOLT, M10X 30 PLATED	4							
6	1	129400-01730	SPACER, OIL SUMP	1							
8	1	729402-01540	SUMP ASSY, OIL	1							
9	2	119640-01640	PLUG, DRAIN M22	1							
11	2	22190-220002	WASHER, SEAL 22	1							
12	1	26106-080162	BOLT, M8X 16 PLATED	4							
13	1	26106-080252	BOLT, M8X 25 PLATED	2							
14	1	26106-080452	BOLT, M8X 45 PLATED	24							
14-1	1	26106-080452	BOLT, M8X 45 PLATED	20						K	
	(A=FROM 1ST)										
15	1	129100-01580	PIN, M8X16	2							
16	1	129100-01640	CASE ASSY, OIL SEAL	1							
18	2	129795-01780	SEAL, OIL	1							
19	1	129486-01670	BOLT, M8X30	6							
20	1	26106-080352	BOLT, M8X 35 PLATED	3							
21	1	977770-01212	GASKET, LIQUID	1							1
22	1	26106-080502	BOLT, M8X 50 PLATED	4						W	
	(A=FROM 1ST)										

Remarks
(1) OPTIONAL PART.

N:Old ◄Yes/No► New. Q:Old ◄No/Yes► New. R:Old ◄Yes/Yes► New. S:Old ◄No/No► New. W:Add. Z:Discontinued. F:Interchangeable by set. K:Q'ty Change

Copyright (C) YANMAR CO., LTD. All RightsReserved.

Fig.4. CYLINDER HEAD & BONNET

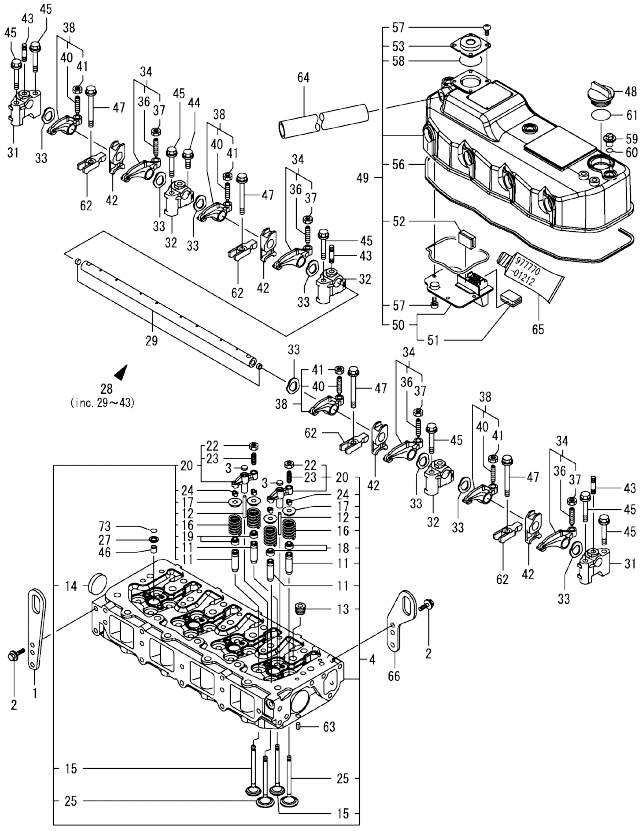

(A)=4TNV84T-DMW
(B)=
(C)=
(D)=
(E)=
(F)=

No.	Lev.	Parts No.	Description	Q'ty (A)	(B)	(C)	(D)	(E)	(F)	I	R
1	1	129900-07900	LIFTER	1							
2	1	26106-080162	BOLT, M8X 16 PLATED	4							
3	1	129508-11840	SEAT, VALVE BRIDGE	8							
4	1	129508-11700	HEAD ASSY, CYLINDER	1							
11	2	119717-11800	GUIDE, VALVE	16							1
12	2	129508-11820	GUIDE	8							
13	2	23876-020000	PLUG, R02	4							
14	2	27241-400000	PLUG, 40	2							
15	2	129508-11110	VALVE, EXHAUST	8							
16	2	129508-11130	SPRING, VALVE	16							
17	2	129508-11180	RETAINER, SPRING	16							
18	2	119717-11340	SEAL, VALVE STEM	8							
19	2	119717-11350	SEAL, VALVE STEM	8							
20	2	129508-11800	BRIDGE ASSY, VALVE	8							
22	3	129150-11750	NUT, M8	8							
23	3	123907-11830	ADJUSTER	8							
24	2	119717-11190	COTTER	32							
25	2	129508-11100	VALVE, INTAKE	8							
27	1	119625-11880	SEAT, NOZZLE	4							
28	1	129508-11241	SHAFT ASSY, ROCKER	1							
29	2	129508-11250	SHAFT, ROCKER ARM	1							
31	2	129508-11260	SUPPORT, ROCKER ARM	2							
32	2	129508-11270	SUPPORT, ROCKER ARM	3							
33	2	129508-11280	WASHER	8							
34	2	129508-11650	ARM, ROCKER	4							
36	3	129150-11230	SCREW, VALVE ADJUST	4							
37	3	129150-11750	NUT, M8	4							
38	2	129508-11660	ARM, ROCKER	4							
40	3	129150-11230	SCREW, VALVE ADJUST	4							
41	3	129150-11750	NUT, M8	4							
42	2	129508-11920	RETAINER	4							
43	2	26226-080352	STUD, M8X 35	3							
44	1	26106-080252	BOLT, M8X 25 PLATED	3							
45	1	26106-080502	BOLT, M8X 50 PLATED	7							
46	1	119802-11870	PROTECTOR, NOZZLE	4							
47	1	129907-11950	BOLT, M8X75	4							
48	1	124160-01751	COVER, FILLER	1							
49	1	129508-11350	BONNET ASSY, HEAD	1							
50	2	129508-03010	PLATE	1							
51	3	119802-03070	BAFFLE, BREATHER	1							
52	2	129150-03070	BAFFLE, BREATHER	1							
53	2	129006-03120	COVER, DIAPHRAGM	1							
56	2	129508-11310	GASKET, BONNET	1							
57	2	22857-500100	SCREW, 5X10	8							
58	2	24341-000400	O-RING, 1AS40.0	1							
59	1	124160-11360	KNOB	3							
60	1	24311-000120	O-RING, 1AP12.0	3							
61	1	24311-000320	O-RING, 1AP32.0	1							
62	1	129508-11900	RETAINER, NOZZLE	4							
63	1	22351-060012	PIN, SPRING 6.0X12	2							
64	1	129150-03090	HOSE, ID16X2T	1							

Remarks
(1) REPAIR PART.
(2) OPTIONAL PART.

N:Old ←Yes/No→ New. Q:Old ←No/Yes→ New. R:Old ←Yes/Yes→ New. S:Old ←No/No→ New. W:Add. Z:Discontinued. F:Interchangeable by set. K:Q'ty Change

++ CONTINUE ++

Copyright (C) YANMAR CO., LTD. All RightsReserved.

Fig.4. CYLINDER HEAD & BONNET

(A)=4TNV84T-DMW
(B)=
(C)=
(D)=
(E)=
(F)=

No.	Lev.	Parts No.	Description	Q'ty (A)	(B)	(C)	(D)	(E)	(F)	I	R
65	1	977770-01212	GASKET, LIQUID	1							2
66	1	129486-07901	LIFTER	1							
73	1	24311-000120	O-RING, 1AP12.0	4							

Remarks
(1) REPAIR PART.
(2) OPTIONAL PART.

N:Old ←Yes/No→ New. Q:Old ←No/Yes→ New. R:Old ←Yes/Yes→ New. S:Old ←No/No→ New. W:Add. Z:Discontinued. F:Interchangeable by set. K:Q'ty Change

Copyright (C) YANMAR CO., LTD. All RightsReserved.

Fig.5. SUCTION MANIFOLD

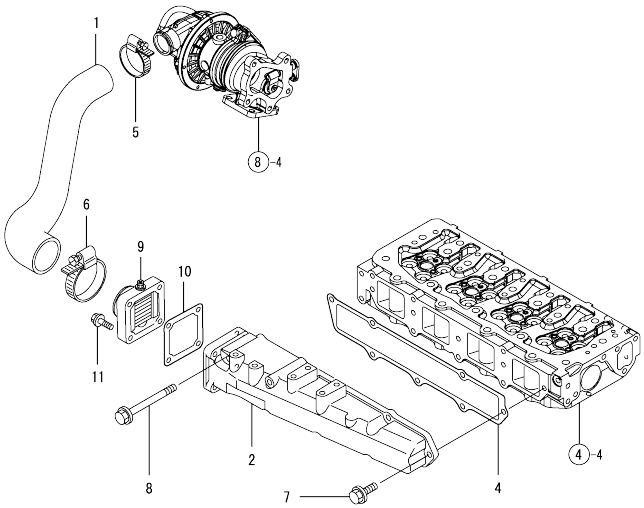

(A)=4TNV84T-DMW (D)=
(B)= (E)=
(C)= (F)=

No.	Lev.	Parts No.	Description	Q'ty (A)	(B)	(C)	(D)	(E)	(F)	I	R
1	1	129508-12060	PIPE, AIR INTAKE	1							
2	1	129508-12100	MANIFOLD, AIR INTAKE	1							
4	1	129508-12110	GASKET, MANIFOLD	1							
5	1	23000-048000	CLAMP, 48	1							
6	1	23000-060000	CLAMP, 60	1							
7	1	26106-080202	BOLT, M8X 20 PLATED	5							
8	1	26106-080802	BOLT, M8X 80 PLATED	2							
9	1	129120-77501	HEATER	1							
10	1	129150-77511	GASKET	1							
11	1	26106-080352	BOLT, M8X 35 PLATED	4							

N:Old ←Yes/No→ New. Q:Old ←No/Yes→ New. R:Old ←Yes/Yes→ New. S:Old ←No/No→ New. W:Add. Z:Discontinued. F:Interchangeable by set. K:Q'ty Change

Copyright (C) YANMAR CO., LTD. All RightsReserved.

Fig.6. EXHAUST MANIFOLD & SILENCER

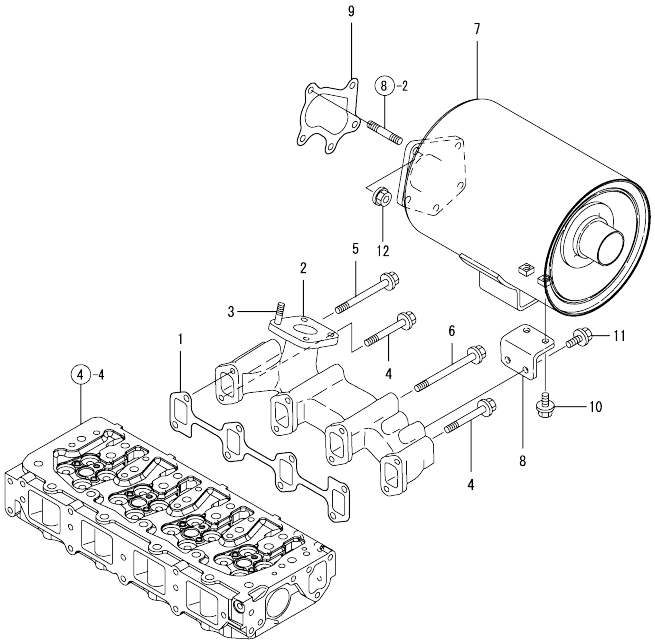

(A)=4TNV84T-DMW (D)=
(B)= (E)=
(C)= (F)=

No.	Lev.	Parts No.	Description	Q'ty (A)	(B)	(C)	(D)	(E)	(F)	I	R
1	1	129550-13110	GASKET	1							
2	1	129403-13120	MANIFOLD, EXHAUST	1							
3	1	119131-18320	STUD, M8X22	4							
4	1	119802-13650	BOLT, M8X65	3							
5	1	119802-13670	BOLT, M8X85	1							
6	1	129693-44310	BOLT	4							
6-1	1	119802-13820	BOLT, M8X100 9.8T	4						N	
	(A=*2009.12)										
7	1	129533-13500	SILENCER	1							
8	1	129403-13540	SUPPORT, SILENCER	1							
9	1	129508-18090	GASKET	1							
10	1	26106-080142	BOLT, M8X 14 PLATED	2							
11	1	26106-080202	BOLT, M8X 20 PLATED	2							
12	1	26306-080002	NUT, M8	5							

N:Old ←Yes/No→ New. Q:Old ←No/Yes→ New. R:Old ←Yes/Yes→ New. S:Old ←No/No→ New. W:Add. Z:Discontinued. F:Interchangeable by set. K:Q'ty Change

Copyright (C) YANMAR CO., LTD. All RightsReserved.

Fig.7. CAMSHAFT & DRIVING GEAR

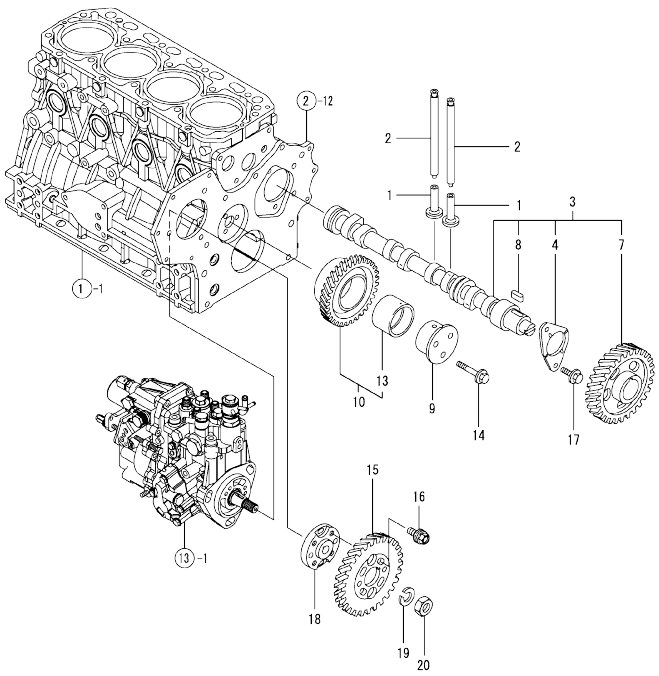

(A)=4TNV84T-DMW (D)=
(B)= (E)=
(C)= (F)=

No.	Lev.	Parts No.	Description	Q'ty (A)	(B)	(C)	(D)	(E)	(F)	I	R
1	1	129150-14200	TAPPET	8							
2	1	129150-14400	ROD, PUSH L=178	8							
3	1	129508-14580	CAMSHAFT ASSY	1							
4	2	129150-02450	BEARING, THRUST	1							
7	2	129150-14101	GEAR, CAMSHAFT	1							
8	2	22512-070140	KEY, 7X 14	1							
9	1	119802-25051	SHAFT, IDLE	1							
10	1	119802-25100	GEAR ASSY, IDLE	1							
13	2	119802-25070	BUSH, IDLE GEAR	1							1
14	1	26106-080402	BOLT, M8X 40 PLATED	3							
15	1	119802-25901	GEAR, PUMP	1							
16	1	129150-25301	BOLT	4							
17	1	26106-080142	BOLT, M8X 14 PLATED	2							
18	1	158552-51151	FLANGE	1							
19	1	22217-140000	WASHER, SPRING 14	1							
20	1	26776-140002	NUT, LOCK M14	1							

Remarks
(1) REPAIR PART.

N:Old $\frac{\text{Yes}}{\text{No}}$ New. Q:Old $\frac{\text{No}}{\text{Yes}}$ New. R:Old $\frac{\text{Yes}}{\text{Yes}}$ New. S:Old $\frac{\text{No}}{\text{No}}$ New. W:Add. Z:Discontinued. F:Interchangeable by set. K:Q'ty Change

Copyright (C) YANMAR CO., LTD. All RightsReserved.

Fig.8. TURBINE

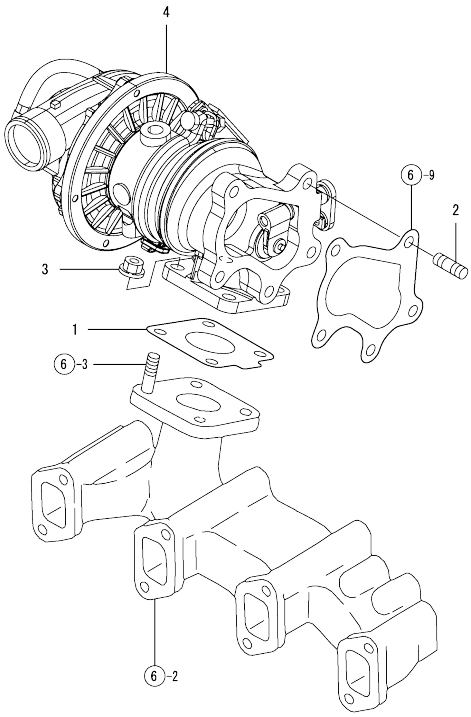

(A)=4TNV84T-DMW (D)=
(B)= (E)=
(C)= (F)=

No.	Lev.	Parts No.	Description	Q'ty (A)	(B)	(C)	(D)	(E)	(F)	I	R
1	1	129508-18080	GASKET	1							
2	1	129418-18320	STUD, M8X20	5							
3	1	26306-080002	NUT, M8	5							
4	1	129508-18010	TURBINE, RHF4	1							

N:Old ◄Yes/No► New. Q:Old ◄No/Yes► New. R:Old ◄Yes/Yes► New. S:Old ◄No/No► New. W:Add. Z:Discontinued. F:Interchangeable by set. K:Q'ty Change

Copyright (C) YANMAR CO., LTD. All RightsReserved.

Fig.9. CRANKSHAFT & PISTON

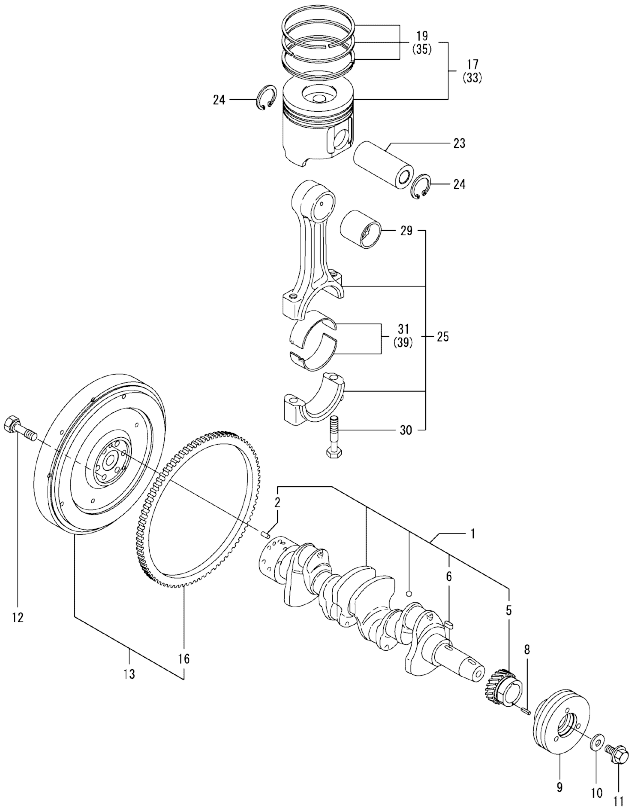

(A)=4TNV84T-DMW
(B)=
(C)=
(D)=
(E)=
(F)=

No.	Lev.	Parts No.	Description	Q'ty (A)	(B)	(C)	(D)	(E)	(F)	I	R
1	1	129508-21002	CRANKSHAFT ASSY	1							
2	2	129100-01580	PIN, M8X16	1							
5	2	119802-21202	GEAR, CRANKSHAFT	1							
6	2	22512-070140	KEY, 7X 14	1							
8	1	22351-030010	PIN, SPRING 3.0X10	1							
9	1	119802-21650	V-PULLEY, 110	1							
10	1	129795-21661	WASHER	1							
11	1	121850-21680	BOLT	1							
12	1	121111-21501	BOLT, FLYWHEEL	6							
13	1	171420-21580	FLYWHEEL ASSY	1							
16	2	119865-21600	GEAR, RING	1							
17	1	129508-22080	PISTON ASSY	4							
19	2	129004-22500	RING SET, PISTON	4							
23	1	129202-22300	PIN, PISTON D26 L70	4							
24	1	22252-000260	RING, 26	8							
25	1	729402-23100	ROD ASSY, CONNECTING	4							
29	2	129100-23910	BEARING, PISTON PIN	4							1
30	2	121550-23200	BOLT, CONNECTING ROD	8							
31	2	129150-23600	BEARING, CRANK PIN	4							
33	1	129508-22900	PISTON ASSY, 0.25 OS	4							2
35	2	129004-22950	RING SET, 0.25 OS	4							2
39	1	129150-23610	BEARING, 0.25 US	4							3

Remarks
(1) REPAIR PART.
(2) OVER-SIZE(O.S=0.25)PART.
(3) UNDER-SIZE(U.S=0.25)PART.

N:Old ←Yes/No→ New. Q:Old ←No/Yes→ New. R:Old ←Yes/Yes→ New. S:Old ←No/No→ New. W:Add. Z:Discontinued. F:Interchangeable by set. K:Q'ty Change

Copyright (C) YANMAR CO., LTD. All RightsReserved.

Fig.10. LUB. OIL SYSTEM

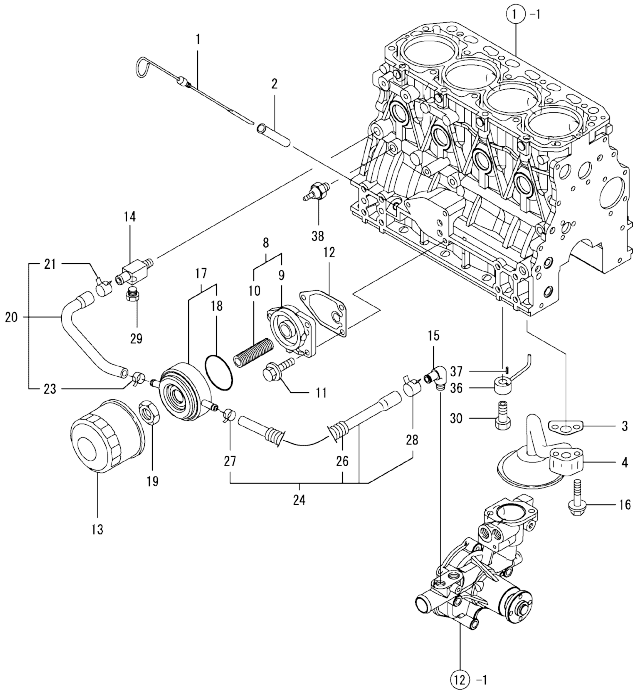

(A)=4TNV84T-DMW
(B)=
(C)=
(D)=
(E)=
(F)=

No.	Lev.	Parts No.	Description	Q'ty (A)	(B)	(C)	(D)	(E)	(F)	I	R
1	1	129005-34802	DIPSTICK, OIL	1							
2	1	121520-34810	GUIDE, DIPSTICK	1							
3	1	129150-35042	GASKET	1							
4	1	129150-35091	PIPE ASSY, OIL INLET	1							
8	1	129006-35100	BRACKET ASSY, FILTER	1							
9	2	119802-35110	BRACKET, FILTER	1							
10	2	129417-35150	STUD, L=67	1							
11	1	26106-080202	BOLT, M8X 20 PLATED	3							
12	1	129150-35111	GASKET	1							
13	1	129150-35170	FILTER,LO	1							1
14	1	129006-44480	JOINT	1							
15	1	129103-49301	ELBOW, PT1/4	1							
16	1	26106-080352	BOLT, M8X 35 PLATED	2							
17	1	129508-33010	COOLER ASSY, OIL	1							
18	2	129508-33050	O-RING	1							
19	1	129417-33110	NUT	1							
20	1	129508-49030	PIPE ASSY, WATER	1							
21	2	171008-03990	CLIP, HOSE 18.5	1							
23	2	23080-015000	CLAMP, 15	1							
24	1	129508-49040	PIPE ASSY, WATER	1							
26	2	119940-59130	TUBE, CORRUGATED	1							
27	2	23080-015000	CLAMP, 15	1							
28	2	23080-018000	CLAMP, 18	1							
29	1	171056-49120	PLUG, DRAIN	1							
30	1	129792-39410	VALVE ASSY, CHECK	4							
36	1	129553-39650	NOZZLE	4							
37	1	22351-030010	PIN, SPRING 3.0X10	4							
38	1	114250-39450	SWITCH, 0.5KG	1							

Remarks
(1) REPAIR PART.

N:Old ←Yes/No→ New. Q:Old ←No/Yes→ New. R:Old ←Yes/Yes→ New. S:Old ←No/No→ New. W:Add. Z:Discontinued. F:Interchangeable by set. K:Q'ty Change

Copyright (C) YANMAR CO., LTD. All RightsReserved.

Fig.11. LUB. OIL LINE

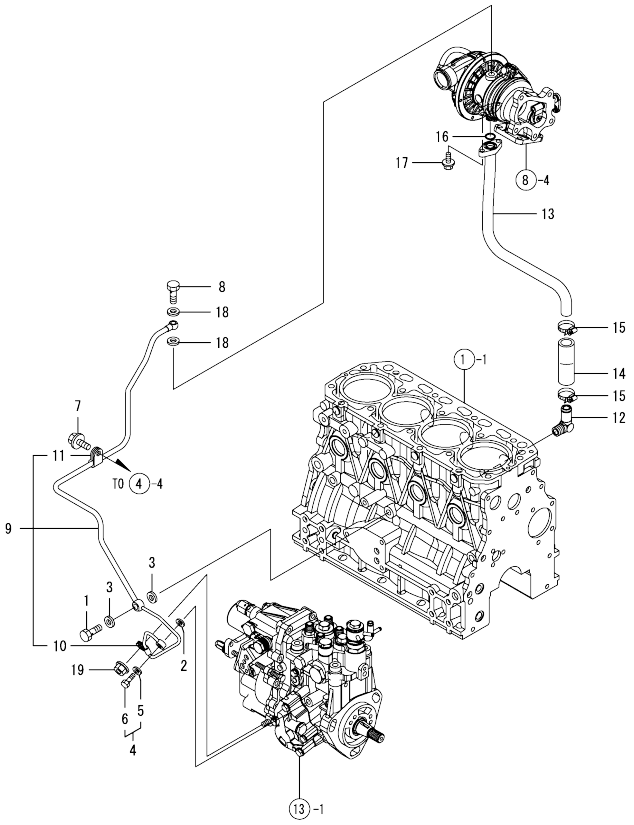

(A)=4TNV84T-DMW
(B)=
(C)=
(D)=
(E)=
(F)=

No.	Lev.	Parts No.	Description	Q'ty (A)	(B)	(C)	(D)	(E)	(F)	I	R
1	1	124160-39140	BOLT, PIPE JOINT M10	1							
2	1	22190-080002	WASHER, SEAL 6	1							
3	1	22190-100002	WASHER, SEAL 10	2							
4	1	129005-59830	BOLT ASSY, JOINT M8	1							
5	2	22190-080002	WASHER, SEAL 6	1							
6	2	23857-030000	BOLT, JOINT 3	1							
7	1	26106-080122	BOLT, M8X 12 PLATED	1							
8	1	121252-39150	BOLT, JOINT M10X1.5	1							
9	1	129508-39450	PIPE ASSY, OIL	1							
10	2	119802-39500	RETAINER, PIPE	1							
11	2	124223-39900	RETAINER	1							
12	1	124070-13300	ELBOW, PT3/8	1							
13	1	129508-39600	PIPE, OIL	1							
14	1	123901-39820	HOSE	1							
15	1	23000-025000	CLAMP, 25	2							
16	1	24316-000160	O-RING, 4DP16.0	1							
17	1	26106-060162	BOLT, M6X 16 PLATED	2							
18	1	23414-100000	GASKET, 10X1.0	2							
19	1	26366-060002	NUT, M6	1							

N:Old ←Yes/No→ New. Q:Old ←No/Yes→ New. R:Old ←Yes/Yes→ New. S:Old ←No/No→ New. W:Add. Z:Discontinued. F:Interchangeable by set. K:Q'ty Change

Copyright (C) YANMAR CO., LTD. All RightsReserved.

Fig.12. COOLING WATER SYSTEM

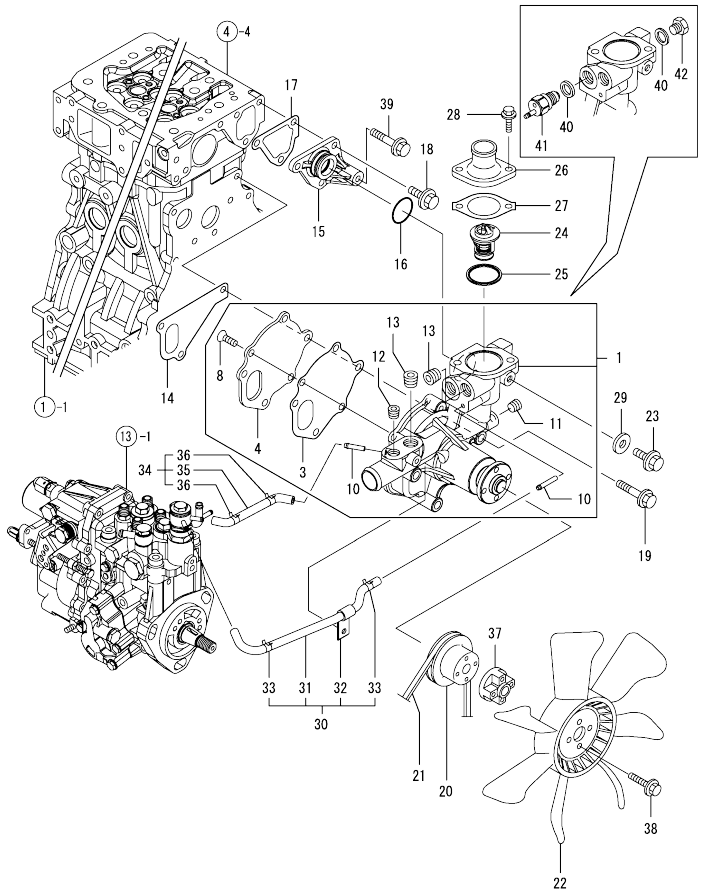

(A)=4TNV84T-DMW
(B)=
(C)=
(D)=
(E)=
(F)=

No.	Lev.	Parts No.	Description	Q'ty (A)	(B)	(C)	(D)	(E)	(F)	I	R
1	1	129508-42001	PUMP ASSY, WATER	1							
3	2	129100-42051	GASKET, WATER PUMP	1							
4	2	129100-42121	PLATE	1							
8	2	121850-42410	SCREW	3							
10	2	119802-49113	JOINT, PIPE	2							
11	2	23876-010000	PLUG, R01	1							
12	2	23876-020000	PLUG, R02	1							
13	2	129916-49740	PLUG, R03	2							
14	1	129486-42021	GASKET, WATER PUMP	1							
15	1	129004-42040	JOINT	1							
16	1	129486-42140	O-RING, G30	1							
17	1	124395-49840	GASKET	1							
18	1	26106-080162	BOLT, M8X 16 PLATED	3							
19	1	26106-080602	BOLT, M8X 60 PLATED	3							
20	1	129403-42380	V-PULLEY, D=110	1							
21	1	25132-003800	V-BELT, A38	1							
22	1	129655-44740	FAN, COOLING D380	1							
23	1	26106-080122	BOLT, M8X 12 PLATED	1							
24	1	129155-49801	THERMOSTAT, 71	1							
25	1	129150-49811	GASKET, THERMOSTAT	1							
26	1	129350-49530	COVER, THERMOSTAT	1							
27	1	129795-49551	GASKET	1							
28	1	26106-080222	BOLT, M8X 22 PLATED	2							
29	1	23414-080000	GASKET, 8X1.0	1							
30	1	129004-49610	PIPE ASSY, WATER	1							
31	2	129004-49711	PIPE ASSY, WATER	1							
32	2	119802-49730	RETAINER, PIPE	1							
33	2	124722-59050	CLIP, HOSE 9	2							
34	1	129004-49620	PIPE ASSY, WATER	1							
35	2	129004-49721	PIPE ASSY, WATER	1							
36	2	124722-59050	CLIP, HOSE 9	2							
37	1	171353-44760	SPACER, FAN	1							
38	1	26106-060402	BOLT, M6X 40 PLATED	4							
39	1	26106-080452	BOLT, M8X 45 PLATED	1							
40	1	124465-44950	GASKET, 16	2							
41	1	121250-44901	SWITCH, 110	1							
42	1	121450-42450	PLUG, M16	1							

N:Old ◄Yes/No► New. Q:Old ◄No/Yes► New. R:Old ◄Yes/Yes► New. S:Old ◄No/No► New. W:Add. Z:Discontinued. F:Interchangeable by set. K:Q'ty Change

Copyright (C) YANMAR CO., LTD. All RightsReserved.

Fig.13. FUEL INJECTION PUMP

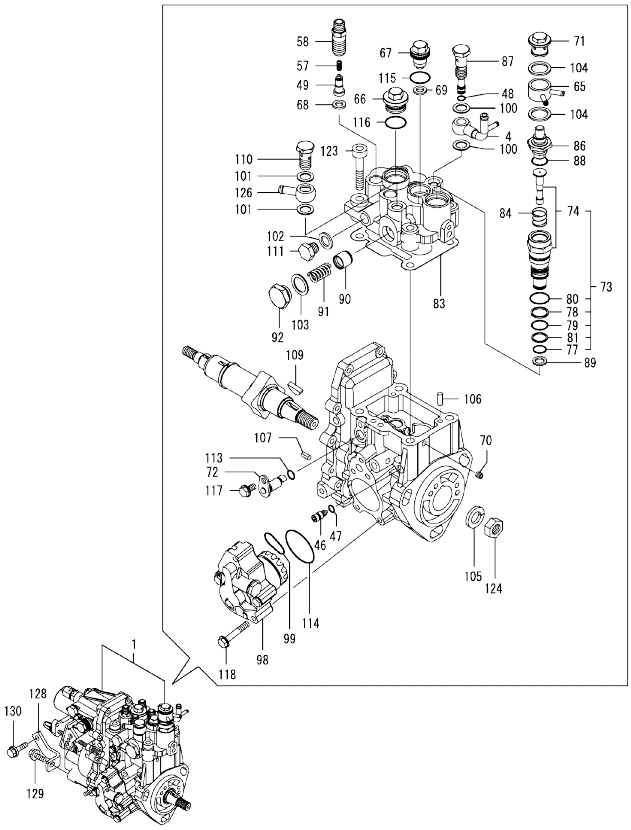

Remarks
(1) GOVERNOR ASSY(FIG.14) IS INCORPORATED IN THIS FOP.CMP (REF.NO.1).

(A)=4TNV84T-DMW
(B)=
(C)=
(D)=
(E)=
(F)=

No.	Lev.	Parts No.	Description	Q'ty (A)	(B)	(C)	(D)	(E)	(F)	I	R
1	1	729533-51390	PUMP ASSY, INJECTION	1							1
4	2	158552-51670	JOINT, OVER FLOW	1							
46	2	158600-51270	STOPPER, TAPPET	1							
47	2	158563-51281	O-RING, 4D S6	1							
48	2	158563-51281	O-RING, 4D S6	1							
49	2	158560-51300	VALVE ASSY, DELIVERY	4							
57	2	158563-51330	SPRING, DELIVERY	4							
58	2	158601-51340	HOLDER, DELIVERY	4							
65	2	158553-51551	JOINT	1							
66	2	158601-51550	PLUG	1							
67	2	119802-51560	PLUG, BARREL	1							
68	2	158552-51570	GASKET	4							
69	2	158552-51570	GASKET	1							
70	2	158557-51570	PLUG	1							
71	2	158601-51570	PLUG	1							
72	2	158552-51580	LIFTER	1							
73	2	119802-51590	TIMER SET	1							
74	3	119802-51600	TIMER ASSY	1							
77	3	158553-51670	O-RING, 1011	1							
78	3	119802-51680	RING, BACK UP	1							
79	3	119802-51690	O-RING	1							
80	3	24356-010200	O-RING, 4D1020	1							
81	3	24372-000150	RING, BACK UP T2P15	1							
83	2	158552-51600	GASKET	1							
84	2	158553-51630	SPRING, TIMER	1							
86	2	158553-51640	ELEMENT	1							
87	2	158601-51650	JOINT, OVER FLOW	1							
88	2	158553-51660	O-RING, P14	1							
89	2	158553-51680	GASKET	1							
90	2	158601-51770	PISTON	1							
91	2	158552-51780	SPRING	1							
92	2	158601-51790	PLUG	1							
98	2	158552-52100	PUMP ASSY, FUEL FEED	1							
99	2	158552-52310	O-RING	1							
100	2	22190-120002	WASHER, SEAL 12	2							
101	2	22190-120002	WASHER, SEAL 12	2							
102	2	22190-120002	WASHER, SEAL 12	1							
103	2	22190-180002	WASHER, SEAL 18	1							
104	2	22190-180002	WASHER, SEAL 18	2							
105	2	22217-140000	WASHER, SPRING 14	1							
106	2	22312-050140	PIN, PARALLEL M5X14	2							
107	2	22351-050010	PIN, SPRING 5.0X10	2							
109	2	119802-51090	KEY, 4X16	1							
110	2	23857-060000	BOLT, JOINT 6	1							
111	2	23887-120002	PLUG, 12	1							
113	2	24311-000070	O-RING, 1AP7.0	1							
114	2	158552-52400	O-RING, 4E S42	1							
115	2	24356-010180	O-RING, 4D1018	1							
116	2	24356-010200	O-RING, 4D1020	1							
117	2	26106-060102	BOLT, M6X 10 PLATED	1							
118	2	158553-51770	BOLT	4							

N:Old ←Yes/No→ New. Q:Old ←No/Yes→ New. R:Old ←Yes/Yes→ New. S:Old ←No/No→ New. W:Add. Z:Discontinued. F:Interchangeable by set. K:Q'ty Change

++ CONTINUE ++

Copyright (C) YANMAR CO., LTD. All RightsReserved.

Fig.13. FUEL INJECTION PUMP

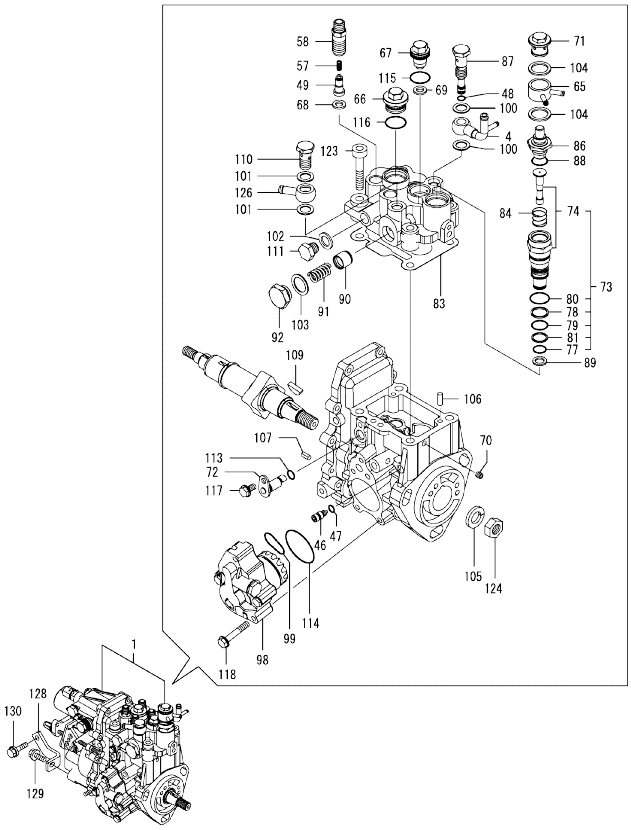

Remarks
(1) GOVERNOR ASSY(FIG.14) IS INCORPORATED IN THIS FOP.CMP (REF.NO.1).

(A)=4TNV84T-DMW
(B)=
(C)=
(D)=
(E)=
(F)=

No.	Lev.	Parts No.	Description	Q'ty (A)	(B)	(C)	(D)	(E)	(F)	I	R
123	2	26450-080452	BOLT, M8X 45	4							
124	2	26776-140002	NUT, LOCK M14	1							
126	2	129916-59020	JOINT, PIPE 12	1							
128	1	129508-51250	RETAINER, PUMP	1							
129	1	26106-080202	BOLT, M8X 20 PLATED	1							
130	1	26106-080302	BOLT, M8X 30 PLATED	1							

N:Old ←Yes/No→ New. Q:Old ←No/Yes→ New. R:Old ←Yes/Yes→ New. S:Old ←No/No→ New. W:Add. Z:Discontinued. F:Interchangeable by set. K:Q'ty Change

Copyright (C) YANMAR CO., LTD. All RightsReserved.

Fig.14. GOVERNOR

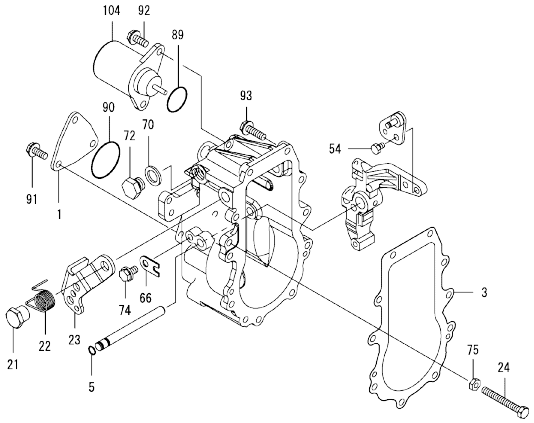

Remarks
* THIS FIGURE(GOVERNOR ASSY)IS INCORPORATED IN THE FUEL INJECTION PUMP ASSY(FIG.13).

(A)=4TNV84T-DMW (D)=
(B)= (E)=
(C)= (F)=

No.	Lev.	Parts No.	Description	Q'ty (A)	(B)	(C)	(D)	(E)	(F)	I	R
1	2	158563-61060	COVER, GOVERNOR CASE	1							
3	2	158553-61050	GASKET	1							
5	2	129155-51280	O-RING, S6	1							
21	2	129255-61410	NUT, LOCK	1							
22	2	119807-61420	SPRING, RETURN	1							
23	2	158552-61441	LEVER, REGULATOR	1							
24	2	129155-61460	BOLT, IDLE	1							
54	2	26116-060102	BOLT, M6X 10 PLATED	1							
66	2	119660-61901	RETAINER, SHAFT	1							
70	2	22190-120000	WASHER, SEAL 12	1							
72	2	23887-120002	PLUG, 12	1							
74	2	26106-060102	BOLT, M6X 10 PLATED	1							
75	2	26756-060002	NUT, LOCK M6	1							
89	2	24341-000280	O-RING, 1AS28.0	1							
90	2	24341-000360	O-RING, 1AS36.0	1							
91	2	26106-060102	BOLT, M6X 10 PLATED	3							
92	2	26106-060142	BOLT, M6X 14 PLATED	2							
93	2	26106-060202	BOLT, M6X 20 PLATED	10							
104	2	119653-77950	SOLENOID, STOP	1							

N:Old ←Yes/No→ New. Q:Old ←No/Yes→ New, R:Old ←Yes/Yes→ New. S:Old ←No/No→ New. W:Add. Z:Discontinued. F:Interchangeable by set. K:Q'ty Change

Copyright (C) YANMAR CO., LTD. All RightsReserved.

Fig.15. FUEL INJECTION VALVE

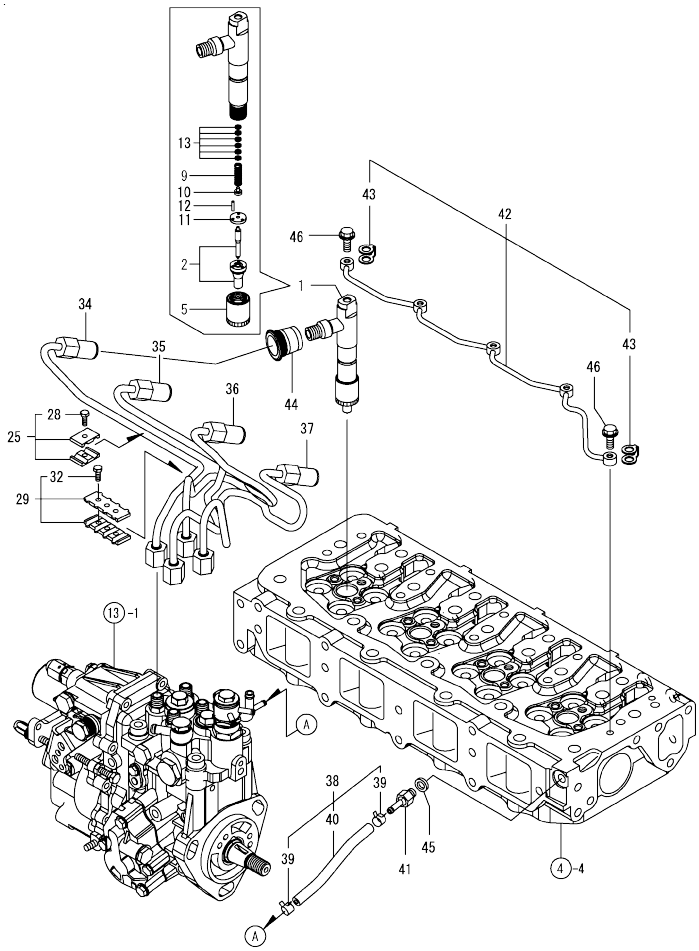

(A)=4TNV84T-DMW
(B)=
(C)=
(D)=
(E)=
(F)=

No.	Lev.	Parts No.	Description	Q'ty (A)	(B)	(C)	(D)	(E)	(F)	I	R
1	1	729508-53100	VALVE ASSY,INJECTION	4							
2	2	129508-53000	VALVE ASSY,INJECTION	4							
5	2	114250-53080	NUT, NOZZLE D16.95	4							
9	2	114250-53120	SPRING, NOZZLE	4							
10	2	114250-53130	SEAT, SPRING	4							
11	2	114250-53140	PLATE	4							
12	2	114250-53210	PIN	8							
13	2	114250-53400	SHIM SET	4							
25	1	119305-59120	RETAINER, PIPE	2							
28	2	129150-59131	BOLT, M4X14	2							
29	1	129550-59120	RETAINER, PIPE	1							
32	2	129150-59131	BOLT, M4X14	2							
34	1	129508-59910	PIPE ASSY, INJECTION	1							
35	1	129508-59920	PIPE ASSY, INJECTION	1							
36	1	129508-59930	PIPE ASSY, INJECTION	1							
37	1	129508-59940	PIPE ASSY, INJECTION	1							
38	1	129508-59570	PIPE ASSY, RETURN	1							
39	2	124722-59050	CLIP, HOSE 9	2							
40	2	129508-59510	PIPE, FUEL RETURN	1							
41	1	123907-59560	JOINT	1							
42	1	129508-59550	PIPE ASSY, RETURN	1							
43	2	123907-59550	GASKET	5							
44	1	123907-11601	SEAL	4							
45	1	22190-080002	WASHER, SEAL 6	1							
46	1	123907-59540	BOLT, PIPE JOINT M6	5							

N:Old ←Yes/No→ New. Q:Old ←No/Yes→ New. R:Old ←Yes/Yes→ New. S:Old ←No/No→ New. W:Add. Z:Discontinued. F:Interchangeable by set. K:Q'ty Change

Copyright (C) YANMAR CO., LTD. All RightsReserved.

Fig.16. FUEL LINE

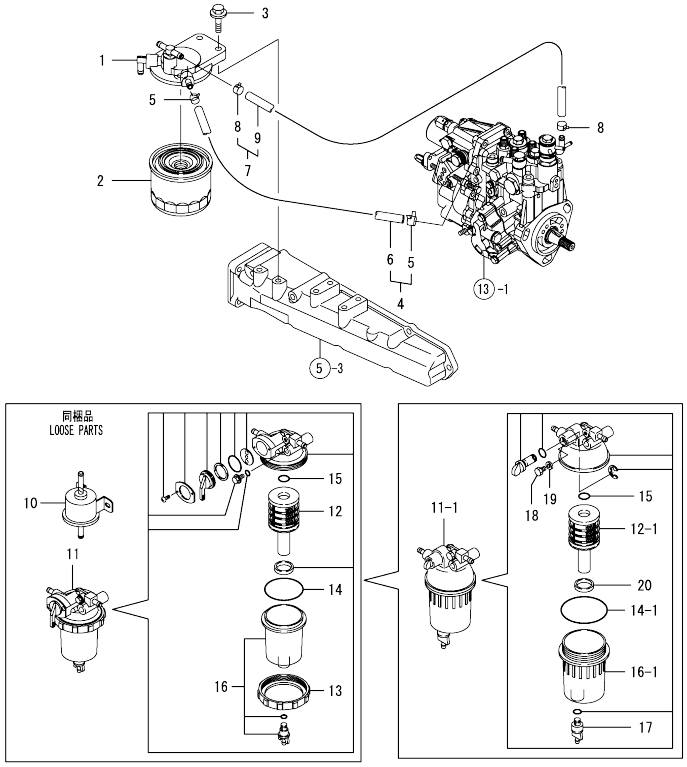

(A)=4TNV84T-DMW
(B)=
(C)=
(D)=
(E)=
(F)=

No.	Lev.	Parts No.	Description	Q'ty (A)	(B)	(C)	(D)	(E)	(F)	I	R
1	1	129004-55610	BRACKET, FILTER	1							
2	1	119802-55800	FILTER, FUEL	1							
3	1	26106-080302	BOLT, M8X 30 PLATED	2							
4	1	129210-59110	PIPE ASSY, FUEL	1							
5	2	124766-59050	CLIP, HOSE 12	2							
6	2	105025-59560	PIPE, FUEL	1							
7	1	129210-59160	PIPE ASSY, FUEL	1							
8	2	124766-59050	CLIP, HOSE 12	2							
9	2	129612-59520	PIPE, FUEL	1							
10	1	119225-52102	PUMP ASSY, FUEL FEED	1							
11	1	119802-55700	SEPARATOR ASSY	1							
11-1	1	129242-55700	SEPARATOR ASSY	1							N
	(A=*2008.08.)										
12	2	119802-55710	ELEMENT	1							
12-1	2	129242-55730	ELEMENT	1							S
	(A=*2008.08.)										
13	2	129100-55690	RING, RETAINING	1							Z
	(A=*2008.08.)										
14	2	24321-000650	O-RING, 1AG65.0	1							
14-1	2	24321-000750	O-RING, 1AG75.0	1							S
	(A=*2008.08.)										
15	2	24311-000160	O-RING, 1AP16.0	1							
16	2	119802-55730	CUP ASSY	1							W
	(A=FROM 1ST)										
16-1	2	129242-55720	CUP	1							S
	(A=*2008.08.)										
17	2	129242-55740	PLUG, DRAIN	1							W
	(A=*2008.08.)										
18	2	129242-55750	VALVE, AIR VENT	1							W
	(A=*2008.08.)										
19	2	129242-55760	GASKET	1							W
	(A=*2008.08.)										
20	2	129242-55770	FLOAT	1							W
	(A=*2008.08.)										

N:Old $\frac{\text{Yes}}{\text{No}}$ New. Q:Old $\frac{\text{No}}{\text{Yes}}$ New. R:Old $\frac{\text{Yes}}{\text{Yes}}$ New. S:Old $\frac{\text{No}}{\text{No}}$ New. W:Add. Z:Discontinued. F:Interchangeable by set. K:Q'ty Change

Copyright (C) YANMAR CO., LTD. All RightsReserved.

Fig.17. STARTING MOTOR

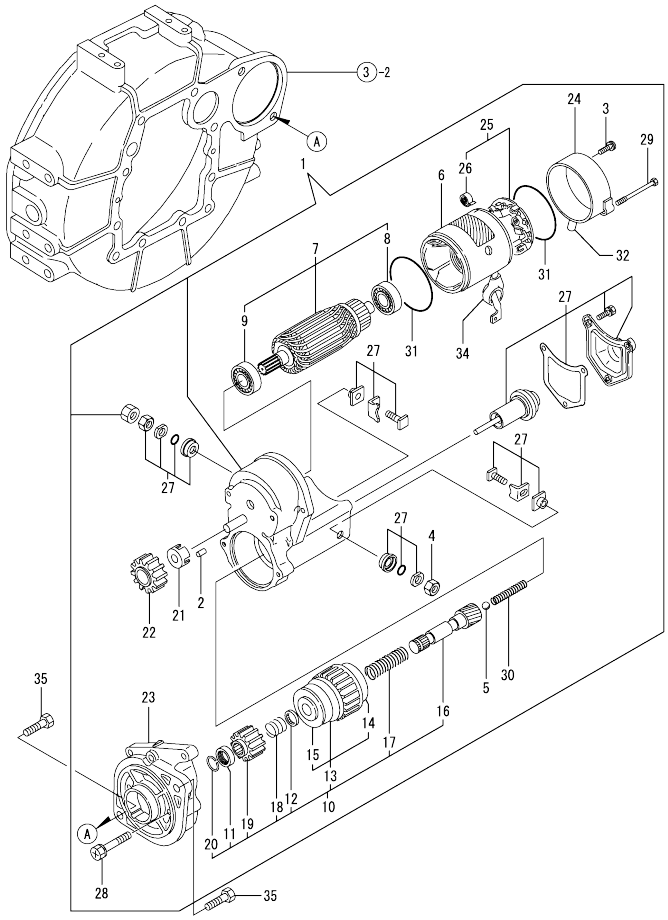

(A)=4TNV84T-DMW
(B)=
(C)=
(D)=
(E)=
(F)=

No.	Lev.	Parts No.	Description	Q'ty (A)	(B)	(C)	(D)	(E)	(F)	I	R
1	1	129407-77010	STARTER, RA1.4	1							
2	2	X0283060061	ROLLER	5							
3	2	129129-77460	SCREW	2							
4	2	X9490561370	NUT	1							
5	2	X9491200240	BALL	1							
6	2	129407-77210	YOKE ASSY	1							
7	2	129407-77220	ARMATURE ASSY	1							
8	3	129129-77230	BEARING	1							
9	3	129129-77240	BEARING	1							
10	2	129407-77250	STARTER	1							
11	3	X0280210230	NUT	1							
12	3	X0283270140	RETAINER	1							
13	3	129407-77390	CLUTCH ASSY	1							
14	4	129129-77440	BEARING	1							
15	4	129129-77450	BEARING	1							
16	3	129129-77400	SHAFT	1							
17	3	129129-77410	SPRING, COIL	1							
18	3	129407-77410	SPRING	1							
19	3	129129-77420	PINION	1							
20	3	129129-77430	RING	1							
21	2	129129-77260	RETAINER	1							
22	2	129129-77270	PINION	1							
23	2	129407-77280	HOUSING	1							
24	2	129407-77290	FRAME	1							
25	2	129407-77300	HOLDER ASSY	1							
26	3	X9491730461	SPRING	4							
27	2	129407-77310	SWITCH ASSY	1							
28	2	129129-77320	BOLT	2							
29	2	129407-77330	BOLT	2							
30	2	129129-77340	SPRING	1							
31	2	129129-77350	O-RING	2							
32	2	129129-77362	COVER	1							
34	2	129129-77380	CAP	1							
35	1	26116-120252	BOLT, M12X 25 PLATED	2							

N:Old ←Yes/No→ New. Q:Old ←No/Yes→ New. R:Old ←Yes/Yes→ New. S:Old ←No/No→ New. W:Add. Z:Discontinued. F:Interchangeable by set. K:Q'ty Change

Copyright (C) YANMAR CO., LTD. All RightsReserved.

Fig.18. GENERATOR

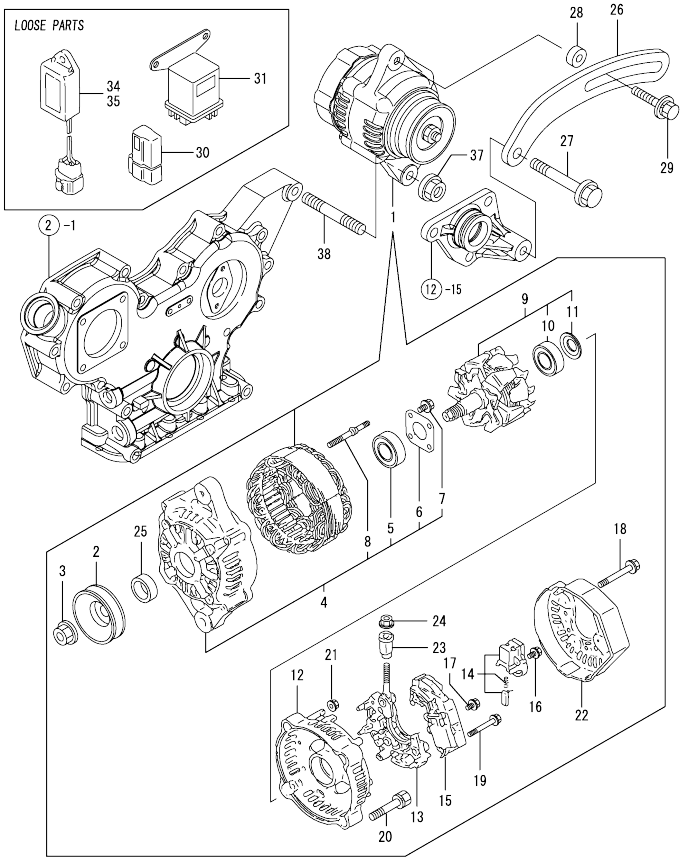

(A)=4TNV84T-DMW
(B)=
(C)=
(D)=
(E)=
(F)=

No.	Lev.	Parts No.	Description	Q'ty (A)	(B)	(C)	(D)	(E)	(F)	I	R
1	1	129052-77220	GENERATOR, 12V-55A	1							
2	2	119620-77461	PULLEY	1							
3	2	119620-77471	NUT	1							
4	2	129052-77422	FRAME ASSY	1							
5	3	119620-79200	BALL BEARING	1							
6	3	119620-79210	PLATE	1							
7	3	119620-79220	SCREW	4							
8	3	119620-79230	BOLT, STUD	2							
9	2	129052-77380	ROTOR ASSY	1							
10	3	123501-79240	BEARING, BALL	1							
11	3	119620-79250	COVER, BEARING	1							
12	2	128401-77440	FRAME	1							
13	2	129052-79260	HOLDER	1							
14	2	129052-79270	HOLDER, BRUSH	1							
15	2	119620-77710	REGULATOR ASSY	1							
16	2	119620-79290	SCREW	6							
17	2	119620-79300	SCREW	1							
18	2	119620-79310	BOLT	3							
19	2	119620-79320	SCREW W/WASHER	2							
20	2	119620-79330	BOLT	2							
21	2	119620-79350	NUT	2							
22	2	128401-77450	COVER	1							
23	2	119620-79340	INSULATION BUSH	1							
24	2	X9490561001	NUT	1							
25	2	119620-77490	COLLAR	1							
26	1	119802-77330	ADJUSTER	1							
27	1	26106-080452	BOLT, M8X 45 PLATED	1							
28	1	119940-77270	SPACER, GENERATOR	1							
29	1	129972-77341	BOLT, ADJUSTER L=50	1							
30	1	119643-66900	DIODE	1							
31	1	119650-77910	RELAY ASSY, GLOW	1							
34	1	128300-77920	TIMER	1							
35	1	129211-77920	TIMER	1							
37	1	26306-100002	NUT, M10	1							
38	1	129795-01900	STUD	1							

N:Old ←Yes/No→ New. Q:Old ←No/Yes→ New. R:Old ←Yes/Yes→ New. S:Old ←No/No→ New. W:Add. Z:Discontinued. F:Interchangeable by set. K:Q'ty Change

Copyright (C) YANMAR CO., LTD. All RightsReserved.

Fig.19. GASKET SET

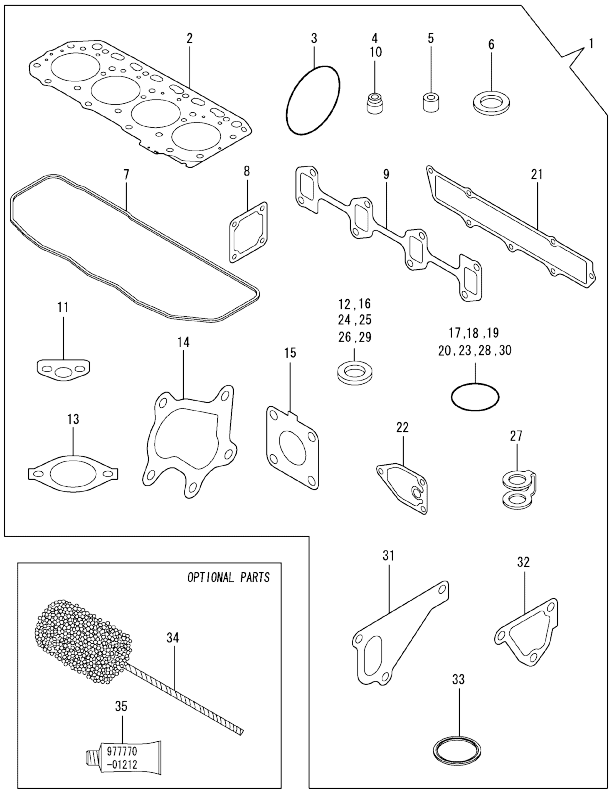

(A)=4TNV84T-DMW (D)=
(B)= (E)=
(C)= (F)=

No.	Lev.	Parts No.	Description	Q'ty (A)	(B)	(C)	(D)	(E)	(F)	I	R
1	1	729508-92670	GASKET SET	1							1
2	2	129508-01330	GASKET, HEAD	1							
3	2	121850-51960	O-RING	1							
4	2	119717-11340	SEAL, VALVE STEM	8							
5	2	119802-11870	PROTECTOR, NOZZLE	4							
6	2	119625-11880	SEAT, NOZZLE	4							
7	2	129508-11310	GASKET, BONNET	1							
8	2	129150-77511	GASKET	1							
9	2	129550-13110	GASKET	1							
10	2	119717-11350	SEAL, VALVE STEM	8							
11	2	129150-35042	GASKET	1							
12	2	124465-44950	GASKET, 16	2							
13	2	129795-49551	GASKET	1							
14	2	129508-18090	GASKET	1							
15	2	129508-18080	GASKET	1							
16	2	22190-080002	WASHER, SEAL 6	3							
17	2	24311-000120	O-RING, 1AP12.0	3							
18	2	24311-000320	O-RING, 1AP32.0	2							
19	2	24341-000240	O-RING, 1AS24.0	1							
20	2	24316-000160	O-RING, 4DP16.0	1							
21	2	129508-12110	GASKET, MANIFOLD	1							
22	2	129150-35111	GASKET	1							
23	2	119609-32040	O-RING, P16	4							
24	2	22190-100002	WASHER, SEAL 10	2							
25	2	23414-080000	GASKET, 8X1.0	1							
26	2	22190-220002	WASHER, SEAL 22	1							
27	2	123907-59550	GASKET	5							
28	2	24341-000400	O-RING, 1AS40.0	1							
29	2	23414-100000	GASKET, 10X1.0	2							
30	2	129486-42140	O-RING, G30	1							
31	2	129486-42021	GASKET, WATER PUMP	1							
32	2	124395-49840	GASKET	1							
33	2	129150-49811	GASKET, THERMOSTAT	1							
34	1	129400-92420	FLEX HORN	1							1
35	1	977770-01212	GASKET, LIQUID	1							1

Remarks
(1)OPTIONAL PARTS.

N:Old ←Yes/No→ New. Q:Old ←No/Yes→ New, R:Old ←Yes/Yes→ New, S:Old ←No/No→ New, W:Add, Z:Discontinued, F:Interchangeable by set, K:Q'ty Change

Copyright (C) YANMAR CO., LTD. All RightsReserved.

Parts No. Index

Parts No.	Fig. No.	Ref. No.
105025-59560	16	6
114250-39450	10	38
114250-53080	15	5
114250-53120	15	9
114250-53130	15	10
114250-53140	15	11
114250-53210	15	12
114250-53400	15	13
119131-18320	6	3
119225-52102	16	10
119305-59120	15	25
119609-32040	2	17
	19	23
119620-01750	3	3
119620-77461	18	2
119620-77471	18	3
119620-77490	18	25
119620-77710	18	15
119620-79200	18	5
119620-79210	18	6
119620-79220	18	7
119620-79230	18	8
119620-79250	18	11
119620-79290	18	16
119620-79300	18	17
119620-79310	18	18
119620-79320	18	19
119620-79330	18	20
119620-79340	18	23
119620-79350	18	21
119625-11880	4	27
	19	6
119640-01640	3	9
119643-66900	18	30
119650-77910	18	31
119653-77950	14	104
119660-61901	14	66
119717-11190	4	24
119717-11340	4	18
	19	4
119717-11350	4	19
	19	10
119717-11800	4	11
119802-01520	2	12
119802-01560	2	13
119802-03070	4	51
119802-11870	4	46
	19	5
119802-13650	6	4
119802-13670	6	5

Parts No.	Fig. No.	Ref. No.
119802-13820	6	6 -1
119802-21202	9	5
119802-21650	9	9
119802-25051	7	9
119802-25070	7	13
119802-25100	7	10
119802-25901	7	15
119802-32070	2	8
119802-32100	2	7
119802-32130	2	20
119802-35110	10	9
119802-39500	11	10
119802-49113	12	10
119802-49730	12	32
119802-51090	13	109
119802-51560	13	67
119802-51590	13	73
119802-51600	13	74
119802-51680	13	78
119802-51690	13	79
119802-55700	16	11
119802-55710	16	12
119802-55730	16	16
119802-55800	16	2
119802-77330	18	26
119807-61420	14	22
119865-21600	9	16
119940-59130	10	26
119940-77270	18	28
121023-01550	2	28
121111-21501	9	12
121250-44901	12	41
121252-39150	11	8
121450-42450	12	42
121520-34810	10	2
121550-23200	9	30
121850-21680	9	11
121850-42410	12	8
121850-51960	2	21
	19	3
123501-79240	18	10
123901-39820	11	14
123907-11601	15	44
123907-11830	4	23
123907-59540	15	46
123907-59550	15	43
	19	27
123907-59560	15	41
124060-01050	1	10
124070-13300	11	12

Parts No.	Fig. No.	Ref. No.
124160-01751	2	14
	4	48
124160-01910	1	5
		15
124160-11360	4	59
124160-39140	11	1
124223-39900	11	11
124240-01871	2	15
124395-49840	12	17
	19	32
124465-44950	12	40
	19	12
124722-59050	12	33
		36
	15	39
124766-59050	16	5
		8
128300-77920	18	34
128401-77440	18	12
128401-77450	18	22
129001-01250	1	11
129001-02930	1	25
129001-32330	2	11
129001-91841	2	22
129004-01190	1	33
129004-22500	9	19
129004-22950	9	35
129004-42040	12	15
129004-49610	12	30
129004-49620	12	34
129004-49711	12	31
129004-49721	12	35
129004-55610	16	1
129005-34802	10	1
129005-59830	11	4
129006-03120	4	53
129006-35100	10	8
129006-44480	10	14
129052-77220	18	1
129052-77380	18	9
129052-77422	18	4
129052-79260	18	13
129052-79270	18	14
129100-01580	3	1
		15
	9	2
129100-01640	3	16
129100-23910	9	29
129100-42051	12	3
129100-42121	12	4

Parts No.	Fig. No.	Ref. No.
129100-55690	16	13
129103-49301	10	15
129120-77501	5	9
129129-77230	17	8
129129-77240	17	9
129129-77260	17	21
129129-77270	17	22
129129-77320	17	28
129129-77340	17	30
129129-77350	17	31
129129-77362	17	32
129129-77380	17	34
129129-77400	17	16
129129-77410	17	17
129129-77420	17	19
129129-77430	17	20
129129-77440	17	14
129129-77450	17	15
129129-77460	17	3
129150-01200	1	31
129150-02020	1	7
129150-02450	7	4
129150-02870	1	34
129150-02930	1	28
129150-02940	1	37
129150-03070	4	52
129150-03090	4	64
129150-11230	4	36
		40
129150-11750	4	22
		37
		41
129150-14101	7	7
129150-14200	7	1
129150-14400	7	2
129150-23600	9	31
129150-23610	9	39
129150-25301	7	16
129150-35042	10	3
	19	11
129150-35091	10	4
129150-35111	10	12
	19	22
129150-35170	10	13
129150-49811	12	25
	19	33
129150-59131	15	28
		32
129150-77511	5	10
	19	8

Parts No. Index

Parts No.	Fig. No.	Ref. No.
129155-49801	12	24
129155-51280	14	5
129155-61460	14	24
129202-22300	9	23
129210-59110	16	4
129210-59160	16	7
129211-77920	18	35
129242-55700	16	11 -1
129242-55720	16	16 -1
129242-55730	16	12 -1
129242-55740	16	17
129242-55750	16	18
129242-55760	16	19
129242-55770	16	20
129255-61410	14	21
129350-49530	12	26
129400-01730	3	6
129400-92420	19	34
129403-13120	6	2
129403-13540	6	8
129403-42380	12	20
129407-77010	17	1
129407-77210	17	6
129407-77220	17	7
129407-77250	17	10
129407-77280	17	23
129407-77290	17	24
129407-77300	17	25
129407-77310	17	27
129407-77330	17	29
129407-77390	17	13
129407-77410	17	18
129417-33110	10	19
129417-35150	10	10
129418-18320	8	2
129418-32320	2	10
129486-01670	3	19
129486-07901	4	66
129486-42021	12	14
	19	31
129486-42140	12	16
	19	30
129508-01330	1	32
	19	2
129508-03010	4	50
129508-11100	4	25
129508-11110	4	15
129508-11130	4	16
129508-11180	4	17
129508-11241	4	28

Parts No.	Fig. No.	Ref. No.
129508-11250	4	29
129508-11260	4	31
129508-11270	4	32
129508-11280	4	33
129508-11310	4	56
	19	7
129508-11350	4	49
129508-11650	4	34
129508-11660	4	38
129508-11700	4	4
129508-11800	4	20
129508-11820	4	12
129508-11840	4	3
129508-11900	4	62
129508-11920	4	42
129508-12060	5	1
129508-12100	5	2
129508-12110	5	4
	19	21
129508-14580	7	3
129508-18010	8	4
129508-18080	8	1
	19	15
129508-18090	6	9
	19	14
129508-21002	9	1
129508-22080	9	17
129508-22900	9	33
129508-32111	2	18
129508-32120	2	19
129508-33010	10	17
129508-33050	10	18
129508-39450	11	9
129508-39600	11	13
129508-42001	12	1
129508-49030	10	20
129508-49040	10	24
129508-51250	13	128
129508-53000	15	2
129508-59510	15	40
129508-59550	15	42
129508-59570	15	38
129508-59910	15	34
129508-59920	15	35
129508-59930	15	36
129508-59940	15	37
129533-13500	6	7
129550-13110	6	1
	19	9
129550-59120	15	29

Parts No.	Fig. No.	Ref. No.
129553-39650	10	36
129612-01600	3	2
129612-59520	16	9
129655-44740	12	22
129693-44310	6	6
129792-39410	10	30
129795-01780	3	18
129795-01800	2	6
129795-01900	18	38
129795-01950	2	16
129795-02411	1	14
129795-21661	9	10
129795-49551	12	27
	19	13
129900-07900	4	1
129900-32130	2	9
129907-11950	4	47
129916-49740	12	13
129916-59020	13	126
129972-77341	18	29
158552-51151	7	18
158552-51570	13	68
		69
158552-51580	13	72
158552-51600	13	83
158552-51670	13	4
158552-51780	13	91
158552-52100	13	98
158552-52310	13	99
158552-52400	13	114
158552-61441	14	23
158553-51551	13	65
158553-51630	13	84
158553-51640	13	86
158553-51660	13	88
158553-51670	13	77
158553-51680	13	89
158553-51770	13	118
158553-61050	14	3
158557-51570	13	70
158560-51300	13	49
158563-51281	13	47
		48
158563-51330	13	57
158563-61060	14	1
158600-51270	13	46
158601-51340	13	58
158601-51550	13	66
158601-51570	13	71
158601-51650	13	87

Parts No.	Fig. No.	Ref. No.
158601-51770	13	90
158601-51790	13	92
171008-03990	10	21
171051-01921	1	6
171056-49120	10	29
171353-44760	12	37
171420-21580	9	13
22190-080002	11	2
		5
	15	45
	19	16
22190-100002	11	3
	19	24
22190-120000	14	70
22190-120002	13	100
		101
		102
22190-180002	13	103
		104
22190-220002	3	11
	19	26
22217-140000	7	19
	13	105
22252-000260	9	24
22312-050140	13	106
22351-030010	9	8
	10	37
22351-050010	13	107
22351-060012	4	63
22512-070140	7	8
	9	6
22857-500100	4	57
23000-025000	11	15
23000-048000	5	5
23000-060000	5	6
23080-015000	10	23
		27
23080-018000	10	28
23414-080000	12	29
	19	25
23414-100000	11	18
	19	29
23857-030000	11	6
23857-060000	13	110
23876-010000	12	11
23876-020000	4	13
	12	12
23876-030000	2	4
23876-040000	2	5
23887-120002	13	111

Parts No. Index

Parts No.	Fig. No.	Ref. No.
23887-120002	14	72
24311-000070	13	113
24311-000120	4	60
		73
	19	17
24311-000160	16	15
24311-000320	2	23
	4	61
	19	18
24316-000160	11	16
	19	20
24321-000650	16	14
24321-000750	16	14 -1
24341-000240	2	29
	19	19
24341-000280	14	89
24341-000360	14	90
24341-000400	4	58
	19	28
24356-010180	13	115
24356-010200	13	80
		116
24372-000150	13	81
25132-003800	12	21
26106-060102	13	117
	14	74
		91
26106-060142	14	92
26106-060162	2	30
	11	17
26106-060202	14	93
26106-060402	12	38
26106-080122	11	7
	12	23
26106-080142	6	10
	7	17
26106-080162	2	24
		25
	3	12
	4	2
	12	18
26106-080202	5	7
	6	11
	10	11
	13	129
26106-080222	12	28
26106-080252	3	13
	4	44
26106-080302	13	130
	16	3

Parts No.	Fig. No.	Ref. No.
26106-080352	3	20
	5	11
	10	16
26106-080402	7	14
26106-080452	3	14
		14 -1
	12	39
	18	27
26106-080502	3	22
	4	45
26106-080552	2	26
26106-080602	12	19
26106-080802	5	8
26116-060102	14	54
26116-120252	17	35
26206-100252	3	4
26206-100302	3	5
26226-080352	4	43
26306-080002	2	27
	6	12
	8	3
26306-100002	18	37
26366-060002	11	19
26450-080452	13	123
26756-060002	14	75
26776-140002	7	20
	13	124
27241-120000	1	12
27241-300000	1	13
27241-400000	4	14
729402-01540	3	8
729402-23100	9	25
729508-01500	2	1
729508-01560	1	1
729508-53100	15	1
729508-92670	19	1
729533-51390	13	1
977770-01212	2	31
	3	21
	4	65
	19	35
X0280210230	17	11
X0283060061	17	2
X0283270140	17	12
X9490561001	18	24
X9490561370	17	4
X9491200240	17	5
X9491730461	17	26

Parts No.	Fig. No.	Ref. No.

Parts No.	Fig. No.	Ref. No.