YANMAR

PARTS CATALOG

0CW10-M42900EN

Last update Mar., 2013

PREFACE

1. This Parts Catalog carries all parts incorporated in YANMAR Model 4TNV84T-DSA01 engine manufactured since August, 2008.

2. Each illustration corresponds to the parts list on the following page.

3. When ordering parts, clearly write down the engine model and serial number, as well as the name and number of each part in your order sheet. This will help insure reliable delivery of the parts you have ordered.

Directions for the Parts Catalog.

1.The parts stipulated in this Parts Catalog are not necessarily standard equipped parts.
2.Parts may change without prior notice.
3.The following is an example of the Parts Catalog format.

0CF10-G21601 29. FUEL INJECTION PUMP(W/BOOST)

(A)=4JH-DT
(B)=4JH-DTZ
(C)=4JH-DTZP
(D)=4JH-DTZA
(E)=4JH-DTZY
(F)=

① REF.	② LEV.	PARTS NO.	DESCRIPTION	Q'TY (A)	(B)	(C)	(D)	(E)	(F)	③ I	⑤ R
1	1	729595-51390	FUEL INJECTION PUMP	1	1	1	1	1			1
1-1	1	729595-51391	FUEL INJECTION PUMP	1	1	1	1	1		N	1
	(A=E00185)	(B=E00200)									
3	2	26022-060162	SCREW M 6X 16	9	9	9	9	9			
3-1 ④	2	26022-060162	SCREW M 6X 16	4	4	4	4	4		K	
	(A=E00156)	(B=E00156)	(C=E00156) (D=E00156)	(E=E00156)							
4	2	129470-51040	CAMSHAFT	1	1	1	1	1			
5	2	122710-51050	BEARING, ROLLER	2	2	2	2	2			
6	2	129470-51060	RETAINER	1	1	1	1	1			

Remarks
(1) BOOST COMPEMSATOR TYPE. OPTIONAL
PART, TO E00155,(4JH-DT, 4JH-DTZ

① Ref. No.

The Ref. No. listed may not be in accordance with the illustration Ref. No.

(Ex.) Illustration No. 1 List Ref No. 1 (Before change) → 1- 1 (After change)

For interchangeable symbols N, R and K, illustrations for new parts may be abbreviated.

② Lev. (Level)

Level indication
The numbers below indicate the level of relativity towards the main part.
1 ----- Main parts (Assembly parts)
2 ----- Sub component included in " 1 ".
3 ----- Sub component included in " 2 ".
Note) Parts that are not for sale are partially illustrated but not listed.

③ Interchangeability Mark

When a part change takes place, one of the following interchangeability symbols is indicated beside the part.

Symbol	Interchangeability	Contents note
N	Old ← Yes / No → New	New Part is interchangeable for Old Part but Old Part is not interchangeable for New Part.
Q	Old ← No / Yes → New	New Part is not interchangeable for Old Part but Old Part is interchangeable for New Part.
R	Old ← Yes / Yes → New	New/ Old Parts are both interchangeable.
S	Old ← No / No → New	New/ Old Parts are both not interchangeable.
W		Part newly added.
Z		Part discontinued.
F		Not interchangeable by a single part but interchangeable together with related parts.
K		Changes only for used parts quantities.

④ Effective Machine No.

When a part changes, the effective Machine No. will be indicated in the (A)-(F) column.

Product Symbol	Product No.	Product Symbol	Product No.
C	Clutch No. Compressor No.	F	Machine No. (Agricultural Equip.)
D	Drive No.	M	Machine No.
E	Engine No.		

Note 1) A date may follow the symbol. (Ex.) 1996.01
Note 2) " XXXXX " and " ZZZZZ " are for parts that could not be predicted or for engine models that could not be identified.
Note 3) (A=E00185) is the E (Engine Serial Number) for the column (A) model (in this case 4JH-DT) after the parts design change.

⑤ Remarks Mark

Figures or alphabets (symbols) are entered in the remarks column.
The comments (remarks) on parts that are indicated at the bottom of the illustration are the same symbols as those stated above.

Contents

0CW10-M42900

Fig. No.	Fig. Name
4TNV84T-DSA01	
1.	CYLINDER BLOCK
2.	GEAR HOUSING
3.	FLYWHEEL HOUSING & OIL SUMP
4.	CYLINDER HEAD & BONNET
5.	SUCTION MANIFOLD & AIR CLEANER
6.	EXHAUST MANIFOLD
7.	CAMSHAFT & DRIVING GEAR
8.	TURBINE
9.	CRANKSHAFT & PISTON
10.	LUB.OIL SYSTEM
11.	LUB.OIL LINE
12.	COOLING WATER SYSTEM
13.	RADIATOR
14.	FUEL INJECTION PUMP
15.	GOVERNOR
16.	FUEL INJECTION VALVE
17.	FUEL LINE
18.	STARTING MOTOR
19.	GENERATOR
20.	ELECTRIC PARTS
21.	GASKET SET & TOOLS

Fig.1. CYLINDER BLOCK

(A)=4TNV84T-DSA01
(B)=
(C)=
(D)=
(E)=
(F)=

No.	Lev.	Parts No.	Description	Q'ty (A)	(B)	(C)	(D)	(E)	(F)	I	R
1	1	729508-01560	BLOCK ASSY, CYLINDER	1							
5	3	129795-02412	BUSH, CAMSHAFT	1							
6	3	171051-01921	PLUG, NPTF1	1							
7	3	129150-02020	BOLT, METAL CAP	10							
10	3	27241-300000	PLUG 30	8							
11	3	129001-01250	PLUG, 50	1							
12	2	27241-120000	PLUG, 12	2							
13	2	124160-01910	PLUG, PT1/4	2							
14	2	124060-01050	PLUG, PT1/8	1							
15	2	124160-01910	PLUG, PT1/4	1							
25	2	129150-02931	BEARING, THRUST	2							3
28	2	129001-02931	BEARING, MAIN	5							3
31	1	129150-01200	BOLT, HEAD	18							
32	1	129508-01330	GASKET, HEAD	1							
33	1	129004-01190	SPACER	1							
34	1	129150-02871	BEARING, 0.25 US	5							1
37	1	129150-02941	BEARING, THRUST 0.25	1							2

Remarks
(1)UNDER-SIZED(U.S.=0.25)PART.
(2)OVER-SIZED(O.S.=0.25)PART.
(3)REPAIR PART.

N:Old $\frac{\text{Yes}}{\text{No}}$ New. Q:Old $\frac{\text{No}}{\text{Yes}}$ New. R:Old $\frac{\text{Yes}}{\text{Yes}}$ New. S:Old $\frac{\text{No}}{\text{No}}$ New. W:Add. Z:Discontinued. F:Interchangeable by set. K:Q'ty Change

Copyright (C) YANMAR GLOBAL CS CO., LTD. All RightsReserved.

Fig.2. GEAR HOUSING

(A)=4TNV84T-DSA01
(B)=
(C)=
(D)=
(E)=
(F)=

No.	Lev.	Parts No.	Description	Q'ty (A)	(B)	(C)	(D)	(E)	(F)	I	R
1	1	129005-01520	FLANGE, GEAR CASE	1							
4	2	23876-030000	PLUG, R03	1							
5	2	23876-040000	PLUG, R04	1							
6	2	119934-01800	SEAL, OIL	1							
7	1	119802-32100	COVER ASSY	1							
8	2	119802-32070	COVER	1							
9	2	129900-32130	VALVE, RELIEF	1							
10	2	129418-32320	SPRING	1							
11	2	129001-32330	PLUG	1							
12	1	129005-01520	FLANGE, GEAR CASE	1							
13	1	119802-01561	STUD, M8X25	3							
14	1	124160-01751	COVER, FILLER	1							
15	1	124240-01871	COVER	1							
16	1	129795-01950	PIPE, KNOCK L=18	2							
17	1	119609-32040	O-RING, P16	4							
18	1	129508-32111	ROTOR, INNER	1							
19	1	129508-32120	ROTOR, OUTER	1							
20	1	119802-32130	SCREW, M6X16	7							
21	1	121850-51960	O-RING	1							
22	1	129001-91841	BOLT, M8X85	3							
23	1	24311-000320	O-RING, 1AP32.0	1							
24	1	26106-080162	BOLT, M8X 16 PLATED	4							
25	1	26106-080162	BOLT, M8X 16 PLATED	3							
26	1	26106-080552	BOLT, M8X 55 PLATED	11							
27	1	26306-080002	NUT, M8	3							
28	1	121023-01551	COVER	1							
29	1	24341-000240	O-RING, 1AS24.0	1							
30	1	26106-060162	BOLT, M6X 16 PLATED	2							
31	1	977770-1207F	GASKET, LIQUID	1							1
32	1	124240-01871	COVER	1							
33	1	124240-01883	GASKET	1							
34	1	26106-080162	BOLT, M8X 16 PLATED	4							

Remarks
(1)OPTIONAL PART.

N:Old ←Yes/No→ New. Q:Old ←No/Yes→ New. R:Old ←Yes/Yes→ New. S:Old ←No/No→ New. W:Add. Z:Discontinued. F:Interchangeable by set. K:Q'ty Change

Copyright (C) YANMAR GLOBAL CS CO., LTD. All RightsReserved.

Fig.3. FLYWHEEL HOUSING & OIL SUMP

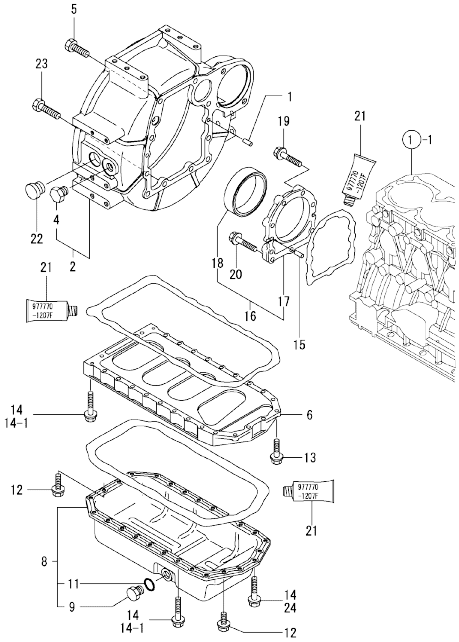

(A)=4TNV84T-DSA01
(B)=
(C)=
(D)=
(E)=
(F)=

No.	Lev.	Parts No.	Description	Q'ty (A)	(B)	(C)	(D)	(E)	(F)	I	R
1	1	129100-01580	PIN, M8X16	2							
2	1	119888-01601	HOUSING, FLYWHEEL	1							
4	2	129486-35210	PLUG, 3/4-16UNF	1							
5	1	26206-100252	BOLT, M10X 25 PLATED	6							
6	1	129400-01730	SPACER, OIL SUMP	1							
8	1	129400-01770	SUMP ASSY, OIL	1							
8-1	1	129688-01780	OIL PAN ASSY, DEEP	1						N	
	(A=E53254)										
9	2	119640-01640	PLUG, DRAIN M22	1							
11	2	22190-220002	WASHER, SEAL 22	1							
12	1	26106-080162	BOLT, M8X 16 PLATED	4							
13	1	26106-080252	BOLT, M8X 25 PLATED	2							
14	1	26106-080452	BOLT, M8X 45 PLATED	24							
14-1	1	26106-080452	BOLT, M8X 45 PLATED	20						K	
	(A=FROM 1ST)										
15	1	129100-01580	PIN, M8X16	2							
16	1	129100-01640	CASE ASSY, OIL SEAL	1							
17	2	129150-01650	CASE, OIL SEAL	1							
18	2	129795-01780	SEAL, OIL	1							
19	1	129486-01670	BOLT, M8X30	6							
20	1	26106-080352	BOLT, M8X 35 PLATED	3							
21	1	977770-1207F	GASKET, LIQUID	1							1
22	1	119620-01750	CAP	1							
23	1	26206-100302	BOLT, M10X 30 PLATED	4							
24	1	26106-080502	BOLT, M8X 50 PLATED	4						W	
	(A=FROM 1ST)										

Remarks
(1)OPTIONAL PART.

N:Old $\frac{\text{Yes}}{\text{No}}$ New. Q:Old $\frac{\text{No}}{\text{Yes}}$ New. R:Old $\frac{\text{Yes}}{\text{Yes}}$ New. S:Old $\frac{\text{No}}{\text{No}}$ New. W:Add. Z:Discontinued. F:Interchangeable by set. K:Q'ty Change

Copyright (C) YANMAR GLOBAL CS CO., LTD. All RightsReserved.

Fig.4. CYLINDER HEAD & BONNET

(A)=4TNV84T-DSA01
(B)=
(C)=
(D)=
(E)=
(F)=

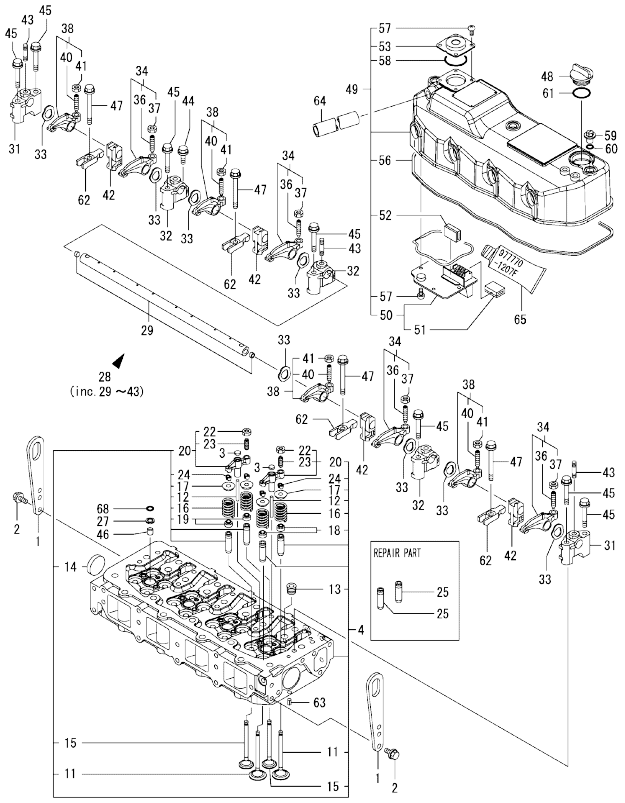

No.	Lev.	Parts No.	Description	Q'ty (A)	(B)	(C)	(D)	(E)	(F)	I	R
1	1	129900-07900	LIFTER	2							
2	1	26106-080162	BOLT, M8X 16 PLATED	4							
3	1	123907-11550	SEAT, VALVE BRIDGE	8							
4	1	129508-11700	HEAD ASSY, CYLINDER	1							
11	2	129508-11100	VALVE, INTAKE	8							
12	2	129508-11820	GUIDE	8							
13	2	23876-020000	PLUG, R02	4							
14	2	27241-400000	PLUG, 40	2							
15	2	129508-11110	VALVE, EXHAUST	8							
16	2	129508-11130	SPRING, VALVE	16							
17	2	129508-11180	RETAINER, SPRING	16							
18	2	119717-11340	SEAL, VALVE STEM	8							
19	2	119717-11350	SEAL, VALVE STEM	8							
20	2	129672-11510	BRIDGE ASSY, VALVE	8							
22	3	129150-11750	NUT, M8	8							
23	3	123907-11830	ADJUSTER	8							
24	2	119717-11190	COTTER	32							
25	1	119717-11800	GUIDE, VALVE	16							1
27	1	119625-11880	SEAT, NOZZLE	4							
28	1	129508-11241	SHAFT ASSY, ROCKER	1							
29	2	129508-11250	SHAFT, ROCKER ARM	1							
31	2	129508-11260	SUPPORT, ROCKER ARM	2							
32	2	129508-11270	SUPPORT, ROCKER ARM	3							
33	2	129508-11280	WASHER	8							
34	2	129508-11650	ARM, ROCKER	4							
36	3	129150-11230	SCREW, VALVE ADJUST	4							
37	3	129150-11750	NUT, M8	4							
38	2	129508-11660	ARM, ROCKER	4							
40	3	129150-11230	SCREW, VALVE ADJUST	4							
41	3	129150-11750	NUT, M8	4							
42	2	129508-11920	RETAINER	4							
43	2	26226-080352	STUD, M8X 35	3							
44	1	26106-080252	BOLT, M8X 25 PLATED	3							
45	1	26106-080502	BOLT, M8X 50 PLATED	7							
46	1	119802-11870	PROTECTOR, NOZZLE	4							
47	1	129907-11950	BOLT, M8X75	4							
48	1	124160-01751	COVER, FILLER	1							
49	1	129508-11350	BONNET ASSY, HEAD	1							
50	2	129508-03010	PLATE	1							
51	3	119802-03070	BAFFLE, BREATHER	1							
52	2	129150-03070	BAFFLE, BREATHER	1							
53	2	129006-03120	COVER, DIAPHRAGM	1							
56	2	129508-11310	GASKET, BONNET	1							
57	2	22857-500100	SCREW, 5X10	8							
58	2	24341-000400	O-RING, 1AS40.0	1							
59	1	124160-11360	KNOB	3							
60	1	24311-000120	O-RING, 1AP12.0	3							
61	1	24311-000320	O-RING, 1AP32.0	1							
62	1	129508-11900	RETAINER, NOZZLE	4							
63	1	22351-060012	PIN, SPRING 6.0X12	2							
64	1	129150-03090	HOSE, ID16X2T	1							

Remarks
(1)REPAIR PART.
(2)OPTIONAL PART.

N:Old ←Yes/No→ New. Q:Old ←No/Yes→ New. R:Old ←Yes/Yes→ New. S:Old ←No/No→ New. W:Add. Z:Discontinued. F:Interchangeable by set. K:Q'ty Change

++ CONTINUE ++

Copyright (C) YANMAR GLOBAL CS CO., LTD. All RightsReserved.

Fig.4. CYLINDER HEAD & BONNET

(A)=4TNV84T-DSA01
(B)=
(C)=
(D)=
(E)=
(F)=

No.	Lev.	Parts No.	Description	Q'ty (A)	(B)	(C)	(D)	(E)	(F)	I	R
65	1	977770-1207F	GASKET, LIQUID	1							2
68	1	24311-000120	O-RING, 1AP12.0	3							

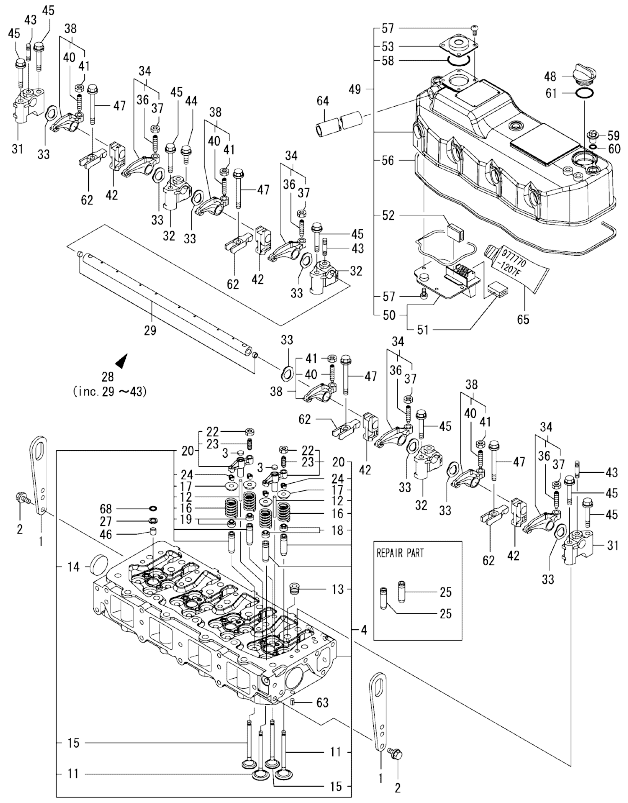

Remarks
(1)REPAIR PART.
(2)OPTIONAL PART.

N:Old ←Yes/No→ New. Q:Old ←No/Yes→ New. R:Old ←Yes/Yes→ New. S:Old ←No/No→ New. W:Add. Z:Discontinued. F:Interchangeable by set. K:Q'ty Change

Copyright (C) YANMAR GLOBAL CS CO., LTD. All RightsReserved.

Fig.5. SUCTION MANIFOLD & AIR CLEANER

(A)=4TNV84T-DSA01
(B)=
(C)=
(D)=
(E)=
(F)=

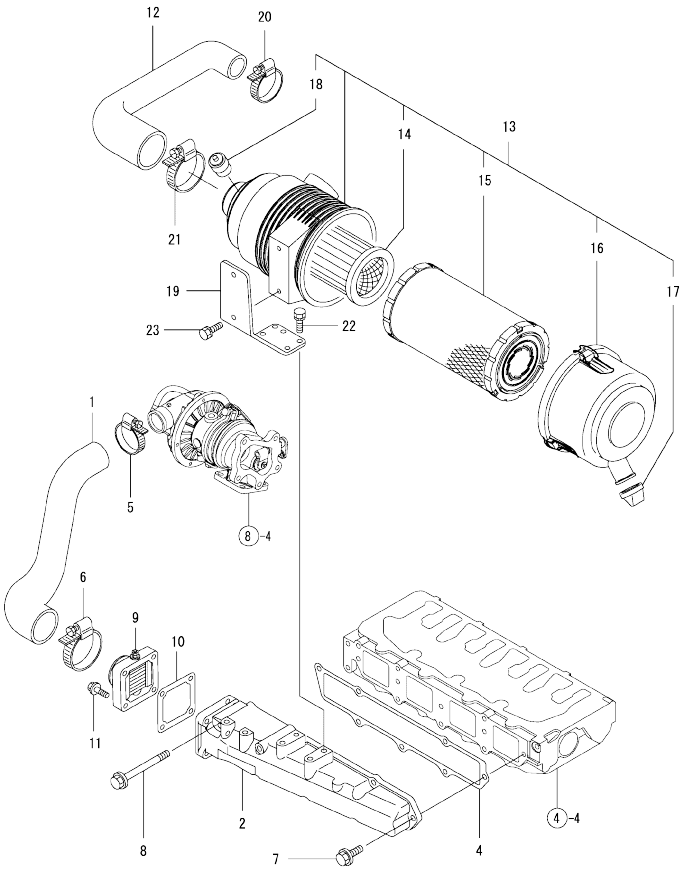

No.	Lev.	Parts No.	Description	Q'ty (A)	(B)	(C)	(D)	(E)	(F)	I	R
1	1	129508-12060	PIPE, AIR INTAKE	1							
2	1	129508-12100	MANIFOLD, AIR INTAKE	1							
4	1	129508-12110	GASKET, MANIFOLD	1							
5	1	23000-048000	CLAMP, 48	1							
6	1	23000-060000	CLAMP, 60	1							
7	1	26106-080202	BOLT, M8X 20 PLATED	5							
8	1	26106-080802	BOLT, M8X 80 PLATED	2							
9	1	129120-77502	HEATER	1							
10	1	129150-77511	GASKET	1							
11	1	26106-080352	BOLT, M8X 35 PLATED	4							
12	1	129508-12080	PIPE, AIR INTAKE	1							
13	1	129946-12510	CLEANER ASSY, AIR	1							
14	2	119005-12571	ELEMENT	1							
15	2	129062-12560	ELEMENT	1							
16	2	129900-12530	COVER ASSY	1							
17	2	119808-12540	VALVE, UNLOADER	1							
18	2	129612-12650	LABEL, MARKING	1							
19	1	129508-12560	BRACKET, AIR CLEANER	1							
20	1	23000-060000	CLAMP, 60	1							
21	1	23000-080000	CLAMP, 80	1							
22	1	26013-080222	BOLT, M8X 22	4							
23	1	26013-080222	BOLT, M8X 22	2							

N:Old ←Yes/No→ New. Q:Old ←No/Yes→ New. R:Old ←Yes/Yes→ New. S:Old ←No/No→ New. W:Add. Z:Discontinued. F:Interchangeable by set. K:Q'ty Change

Copyright (C) YANMAR GLOBAL CS CO., LTD. All RightsReserved.

Fig.6. EXHAUST MANIFOLD

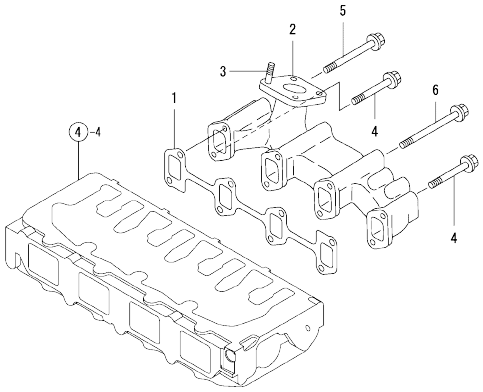

(A)=4TNV84T-DSA01
(B)=
(C)=
(D)=
(E)=
(F)=

No.	Lev.	Parts No.	Description	Q'ty (A)	(B)	(C)	(D)	(E)	(F)	I	R
1	1	129550-13110	GASKET	1							
2	1	129403-13120	MANIFOLD, EXHAUST	1							
3	1	119131-18320	STUD, M8X22	4							
4	1	119802-13650	BOLT, M8X65	3							
5	1	119802-13670	BOLT, M8X85	1							
6	1	129693-44310	BOLT	4							
6-1	1	119802-13820	BOLT, M8X100 9.8T	4						N	
	(A=*2009.12)										

N:Old ◄Yes/No► New. Q:Old ◄No/Yes► New. R:Old ◄Yes/Yes► New. S:Old ◄No/No► New. W:Add. Z:Discontinued. F:Interchangeable by set. K:Q'ty Change

Copyright (C) YANMAR GLOBAL CS CO., LTD. All RightsReserved.

Fig.7. CAMSHAFT & DRIVING GEAR

(A)=4TNV84T-DSA01
(B)=
(C)=
(D)=
(E)=
(F)=

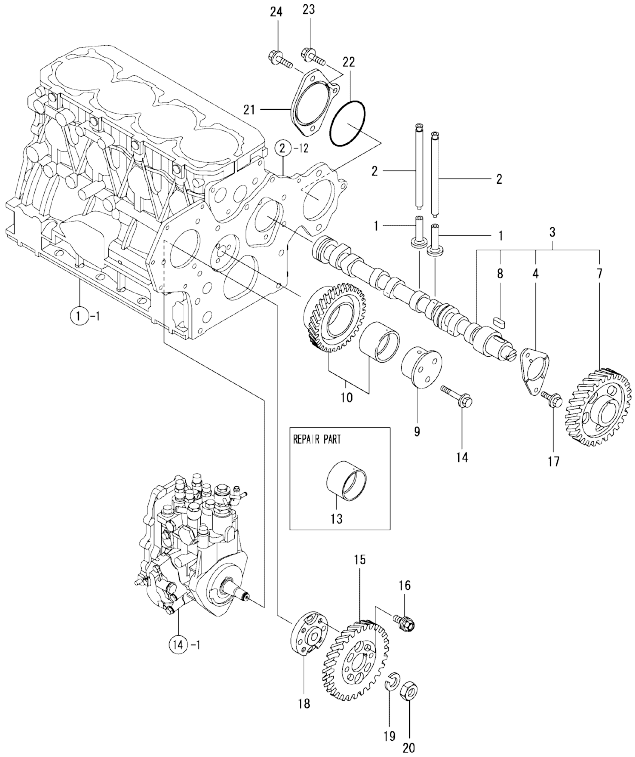

No.	Lev.	Parts No.	Description	Q'ty (A)	(B)	(C)	(D)	(E)	(F)	I	R
1	1	129150-14200	TAPPET	8							
2	1	129150-14400	ROD, PUSH L=178	8							
3	1	129508-14580	CAMSHAFT ASSY	1							
4	2	129150-02450	BEARING, THRUST	1							
7	2	129150-14101	GEAR, CAMSHAFT	1							
8	2	22512-070140	KEY, 7X 14	1							
9	1	119802-25051	SHAFT, IDLE	1							
10	1	119802-25101	GEAR ASSY, IDLE	1							
13	1	119802-25071	BUSH, IDLE GEAR	1							1
14	1	26106-080402	BOLT, M8X 40 PLATED	3							
15	1	119802-25901	GEAR, PUMP	1							
16	1	129150-25301	BOLT	4							
17	1	26106-080142	BOLT, M8X 14 PLATED	2							
18	1	158552-51151	FLANGE	1							
19	1	22217-140000	WASHER, SPRING 14	1							
20	1	26776-140002	NUT, LOCK M14	1							
21	1	129430-26070	COVER	1							
22	1	24321-000800	O-RING, 1AG80.0	1							
23	1	26106-080252	BOLT, M8X 25 PLATED	1							
24	1	26106-100302	BOLT, M10X 30 PLATED	2							

Remarks
(1)REPAIR PART.

N:Old $\frac{\text{Yes}}{\text{No}}$ New. Q:Old $\frac{\text{No}}{\text{Yes}}$ New. R:Old $\frac{\text{Yes}}{\text{Yes}}$ New. S:Old $\frac{\text{No}}{\text{No}}$ New. W:Add. Z:Discontinued. F:Interchangeable by set. K:Q'ty Change

Copyright (C) YANMAR GLOBAL CS CO., LTD. All RightsReserved.

Fig.8. TURBINE

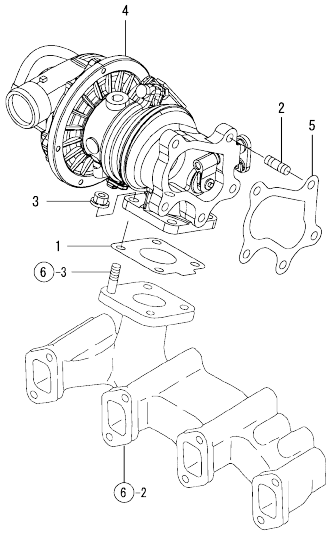

(A)=4TNV84T-DSA01
(B)=
(C)=
(D)=
(E)=
(F)=

No.	Lev.	Parts No.	Description	Q'ty (A)	(B)	(C)	(D)	(E)	(F)	I	R
1	1	129508-18080	GASKET	1							
2	1	129418-18320	STUD, M8X20	5							
3	1	26306-080002	NUT, M8	5							
4	1	129508-18010	TURBINE, RHF4	1							
5	1	129508-18090	GASKET	1							

N:Old ◄Yes/No► New. Q:Old ◄No/Yes► New. R:Old ◄Yes/Yes► New. S:Old ◄No/No► New. W:Add. Z:Discontinued. F:Interchangeable by set. K:Q'ty Change

Copyright (C) YANMAR GLOBAL CS CO., LTD. All RightsReserved.

Fig.9. CRANKSHAFT & PISTON

(A)=4TNV84T-DSA01
(B)=
(C)=
(D)=
(E)=
(F)=

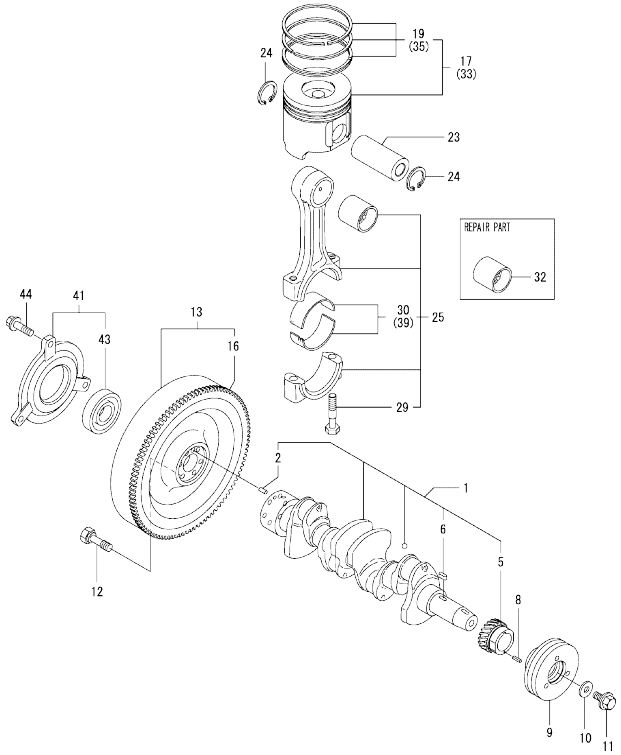

No.	Lev.	Parts No.	Description	Q'ty (A)	(B)	(C)	(D)	(E)	(F)	I	R
1	1	129508-21002	CRANKSHAFT ASSY	1							
2	2	129100-01580	PIN, M8X16	1							
5	2	119802-21202	GEAR, CRANKSHAFT	1							
6	2	22512-070140	KEY, 7X 14	1							
8	1	22351-030010	PIN, SPRING 3.0X10	1							
9	1	119802-21650	V-PULLEY, 110	1							
10	1	129795-21661	WASHER	1							
11	1	121850-21680	BOLT	1							
12	1	121111-21501	BOLT, FLYWHEEL	6							
13	1	129488-21590	FLYWHEEL ASSY	1							
16	2	119865-21600	GEAR, RING	1							
17	1	129508-22080	PISTON ASSY	4							
19	2	129004-22500	RING SET, PISTON	4							
23	1	129202-22300	PIN, PISTON D26 L70	4							
24	1	22252-000260	RING, 26	8							
25	1	729402-23100	ROD ASSY, CONNECTING	4							
29	2	121550-23200	BOLT, CONNECTING ROD	8							
30	2	129150-23601	BEARING, CRANK PIN	4							
32	1	129100-23910	BEARING, PISTON PIN	4							1
33	1	129508-22900	PISTON ASSY, 0.25 OS	4							2
35	2	129004-22950	RING SET, 0.25 OS	4							2
39	1	129150-23611	BEARING, 0.25 US	4							3
41	1	119888-21450	RETAINER, BEARING	1							
43	2	24104-062054	BEARING, BALL 6205UU	1							
44	1	26106-080222	BOLT, M8X 22 PLATED	3							

Remarks
(1)REPAIR PART.
(2)OVER-SIZE(O.S.=0.25)PART.
(3)UNDER-SIZE(U.S.=0.25)PART.

N:Old ←Yes/No→ New. Q:Old ←No/Yes→ New. R:Old ←Yes/Yes→ New. S:Old ←No/No→ New. W:Add. Z:Discontinued. F:Interchangeable by set. K:Q'ty Change

Copyright (C) YANMAR GLOBAL CS CO., LTD. All RightsReserved.

Fig.10. LUB.OIL SYSTEM

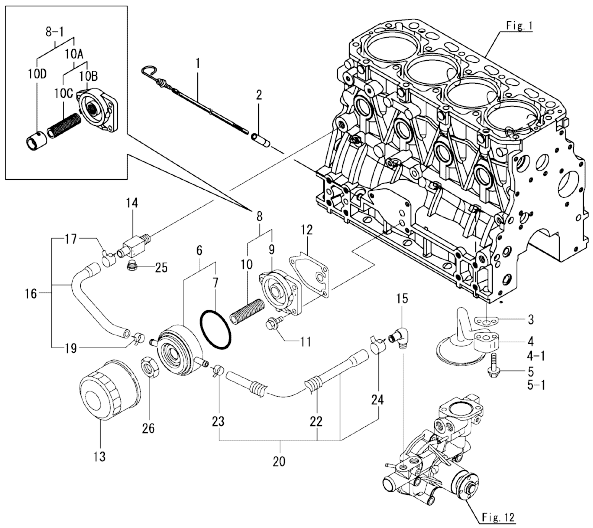

(A)=4TNV84T-DSA01 (D)=
(B)= (E)=
(C)= (F)=

No.	Lev.	Parts No.	Description	Q'ty (A)	(B)	(C)	(D)	(E)	(F)	I	R
1	1	129004-34802	DIPSTICK	1							
2	1	121520-34810	GUIDE, DIPSTICK	1							
3	1	129150-35042	GASKET	1							
4	1	129436-35091	PIPE ASSY, OIL INLET	1							
4-1	1	129436-35070	PIPE ASSY, OIL INLET	1						S	
	(A=EZZZZZ)										
5	1	26106-080352	BOLT, M8X 35 PLATED	2							
5-1	1	26106-080552	BOLT, M8X 55 PLATED	2						S	
	(A=EZZZZZ)										
6	1	129508-33010	COOLER ASSY, OIL	1							
6-1	1	129508-33031	COOLER ASSY, OIL	1						Q	
	(A=E60732)										
7	2	129508-33050	O-RING	1							
7-1	2	129508-33060	GASKET, COOLER	1						Q	
	(A=E60732)										
8	1	129006-35100	BRACKET ASSY, FILTER	1							
8-1	1	129508-35100	BRACKET ASSY,LO FILT	1						Q	
	(A=E60732)										
9	2	119802-35110	BRACKET, FILTER	1						Z	
	(A=E60732)										
10	2	129417-35150	BOLT, STUD M20X67	1						Z	
	(A=E60732)										
10A	2	129006-35100	BRACKET ASSY, FILTER	1						W	
	(A=E60732)										
10B	3	119802-35110	BRACKET, FILTER	1						W	
	(A=E60732)										
10C	3	129417-35150	STUD, M20X67	1						W	
	(A=E60732)										
10D	2	129508-35150	COLLAR, OIL-COOLER	1						W	
	(A=E60732)										
11	1	26106-080202	BOLT, M8X 20 PLATED	3							
12	1	129150-35111	GASKET	1							
13	1	129150-35170	FILTER,LO	1							1
14	1	129006-44480	JOINT	1							
15	1	129103-49301	ELBOW, PT1/4	1							
16	1	129508-49030	HOSE ASSY, WATER	1							
17	2	171008-03990	CLAMP, HOSE 18.5	1							
19	2	23080-015000	CLAMP, 15	1							
20	1	129508-49040	HOSE ASSY, WATER	1							
22	2	119940-59130	TUBE, CORRUGATED 19	1							
23	2	23080-015000	CLAMP, 15	1							
24	2	171008-03990	CLAMP, HOSE 18.5	1							
25	1	171056-49120	PLUG, DRAIN R1/4	1							
26	1	129417-33110	NUT	1							
26-1	1	129417-33111	NUT, OIL COOLER	1						R	
	(A=E46992)										
26-2	1	124085-35350	NUT, M20	1						Q	
	(A=E60732)										

Remarks
(1)Spare parts.

N:Old $\frac{\text{Yes}}{\text{No}}$ New. Q:Old $\frac{\text{No}}{\text{Yes}}$ New. R:Old $\frac{\text{Yes}}{\text{Yes}}$ New. S:Old $\frac{\text{No}}{\text{No}}$ New. W:Add. Z:Discontinued. F:Interchangeable by set. K:Q'ty Change

Copyright (C) YANMAR GLOBAL CS CO., LTD. All RightsReserved.

Fig.11. LUB.OIL LINE

(A)=4TNV84T-DSA01
(B)=
(C)=
(D)=
(E)=
(F)=

No.	Lev.	Parts No.	Description	Q'ty (A)	(B)	(C)	(D)	(E)	(F)	I	R
1	1	129792-39410	VALVE ASSY, CHECK	4							
7	1	129553-39650	NOZZLE	4							
8	1	114250-39450	SWITCH, 0.5KG	1							
9	1	124160-39140	BOLT, PIPE JOINT M10	1							
10	1	22190-080002	WASHER, SEAL 6	1							
11	1	22190-100002	WASHER, SEAL 10	2							
12	1	129005-59830	BOLT ASSY, JOINT M8	1							
13	2	22190-080002	WASHER, SEAL 6	1							
14	2	23857-030000	BOLT, JOINT 3	1							
15	1	26106-080122	BOLT, M8X 12 PLATED	1							
16	1	121252-39150	BOLT, JOINT M10X1.5	1							
17	1	129508-39450	PIPE ASSY, OIL	1							
18	2	119802-39500	RETAINER, PIPE	1							
19	2	124223-39900	RETAINER	1							
20	1	124070-13300	ELBOW, PT3/8	1							
21	1	129508-39600	PIPE, OIL	1							
22	1	123901-39820	HOSE	1							
23	1	23000-025000	CLAMP, 25	2							
24	1	24316-000160	O-RING, 4DP16.0	1							
25	1	26106-060162	BOLT, M6X 16 PLATED	2							
26	1	22351-030010	PIN, SPRING 3.0X10	4							
27	1	23414-100000	GASKET, 10X1.0	2							
28	1	26366-060002	NUT, M6	1							
29	1	171375-39601	DAMPER, 1/8	1							
30	1	119773-91501	SENSOR	1							

N:Old ←Yes/No→ New. Q:Old ←No/Yes→ New. R:Old ←Yes/Yes→ New. S:Old ←No/No→ New. W:Add. Z:Discontinued. F:Interchangeable by set. K:Q'ty Change

Copyright (C) YANMAR GLOBAL CS CO., LTD. All RightsReserved.

Fig.12. COOLING WATER SYSTEM

(A)=4TNV84T-DSA01
(B)=
(C)=
(D)=
(E)=
(F)=

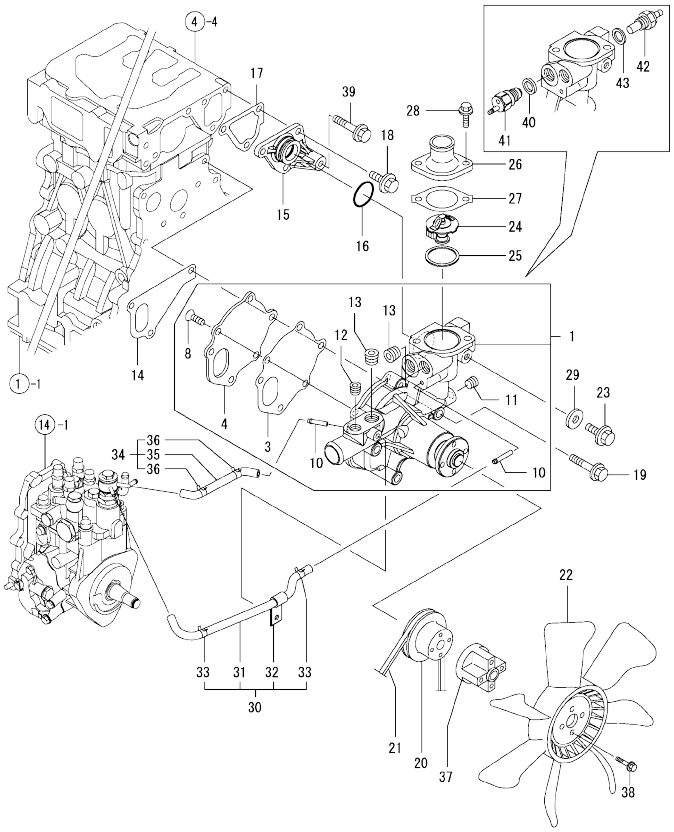

No.	Lev.	Parts No.	Description	Q'ty (A)	(B)	(C)	(D)	(E)	(F)	I	R
1	1	129508-42001	PUMP ASSY, WATER	1							
3	2	129100-42051	GASKET, WATER PUMP	1							
4	2	129100-42121	PLATE, PUMP	1							
8	2	121850-42410	SCREW	3							
10	2	119802-49113	JOINT, PIPE	2							
11	2	23876-010000	PLUG, R01	1							
12	2	23876-020000	PLUG, R02	1							
13	2	129916-49740	PLUG, R3/8	2							
14	1	129486-42021	GASKET, WATER PUMP	1							
15	1	129004-42040	JOINT	1							
16	1	129486-42140	O-RING, G30	1							
17	1	124395-49840	GASKET, THERMOSTAT	1							
18	1	26106-080162	BOLT, M8X 16 PLATED	3							
19	1	26106-080602	BOLT, M8X 60 PLATED	3							
20	1	129403-42380	V-PULLEY, D=110	1							
21	1	119865-42290	V-BELT, A36.5	1							
21-1	1	25152-003600	V-BELT, A36	1							N
	(A=EXXXXX)										
22	1	129655-44740	FAN, COOLING D380	1							
22-1	1	129612-44700	FAN, COOLING	1							R
	(A=E33828)										
23	1	26106-080122	BOLT, M8X 12 PLATED	1							
24	1	129155-49801	THERMOSTAT, 71C	1							
25	1	129150-49811	GASKET, THERMOSTAT	1							
26	1	129350-49530	COVER, THERMOSTAT	1							
27	1	129795-49551	GASKET	1							
28	1	26106-080222	BOLT, M8X 22 PLATED	2							
29	1	23414-080000	GASKET, 8X1.0	1							
30	1	129004-49610	HOSE ASSY, WATER	1							
31	2	129004-49711	HOSE, WATER	1							
32	2	119802-49730	RETAINER, PIPE	1							
33	2	124722-59050	CLAMP, HOSE 9	2							
34	1	129004-49620	HOSE ASSY, WATER	1							
35	2	129004-49721	HOSE, WATER	1							
36	2	124722-59050	CLAMP, HOSE 9	2							
37	1	171353-44760	SPACER, FAN	1							
38	1	26106-060402	BOLT, M6X 40 PLATED	4							
39	1	26106-080452	BOLT, M8X 45 PLATED	1							
40	1	124465-44950	GASKET, 16	1							
41	1	121250-44901	SWITCH, THERMO 110	1							
42	1	124250-49351	SENSOR, WATER TEMP.	1							
43	1	129150-49360	GASKET	1							

N:Old ←Yes/No→ New. Q:Old ←No/Yes→ New. R:Old ←Yes/Yes→ New. S:Old ←No/No→ New. W:Add. Z:Discontinued. F:Interchangeable by set. K:Q'ty Change

Copyright (C) YANMAR GLOBAL CS CO., LTD. All RightsReserved.

Fig.13. RADIATOR

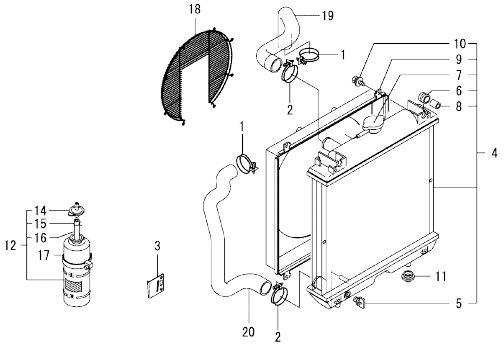

(A)=4TNV84T-DSA01 (D)=
(B)= (E)=
(C)= (F)=

No.	Lev.	Parts No.	Description	Q'ty (A)	(B)	(C)	(D)	(E)	(F)	I	R
1	1	23010-038000	CLAMP, 38	2							
2	1	23010-044000	CLAMP, 44	2							
3	1	121256-44600	BRACKET, SUB TANK	1							
4	1	129508-44520	RADIATOR ASSY	1							
5	2	129508-44550	COCK ASSY	1							
6	2	118400-44720	MOUNT, RUBBER	2							
7	2	129107-44590	CAP, RADIATOR	1							
8	2	118400-44670	COLLAR	2							
9	2	129602-44600	SHROUD	1							
10	2	26014-060122	BOLT, M6X 12	4							
11	1	119255-44660	ABSORBER	2							
12	1	124450-44510	TANK ASSY, SUB	1							
14	2	124450-44530	CAP, SUB-TANK	1							
15	2	124450-44560	CLAMP, HOSE	1							
16	2	23061-070230	PIPE, 7X 230	1							
17	1	124450-44550	BAND, SUB-TANK	1							
18	1	129601-44570	GUARD, FAN	1							
18-1	1	129601-44560	GUARD, FAN	1							R
	(A=E33828)										
19	1	129602-49010	HOSE, WATER	1							
20	1	129508-49070	PIPE, WATER	1							

Remarks
* THIS FIGURE(RADITOR ASSY)IS
OPTIONAL PART.

N:Old $\frac{\text{Yes}}{\text{No}}$ New. Q:Old $\frac{\text{No}}{\text{Yes}}$ New. R:Old $\frac{\text{Yes}}{\text{Yes}}$ New. S:Old $\frac{\text{No}}{\text{No}}$ New. W:Add. Z:Discontinued. F:Interchangeable by set. K:Q'ty Change

Copyright (C) YANMAR GLOBAL CS CO., LTD. All RightsReserved.

Fig.14. FUEL INJECTION PUMP

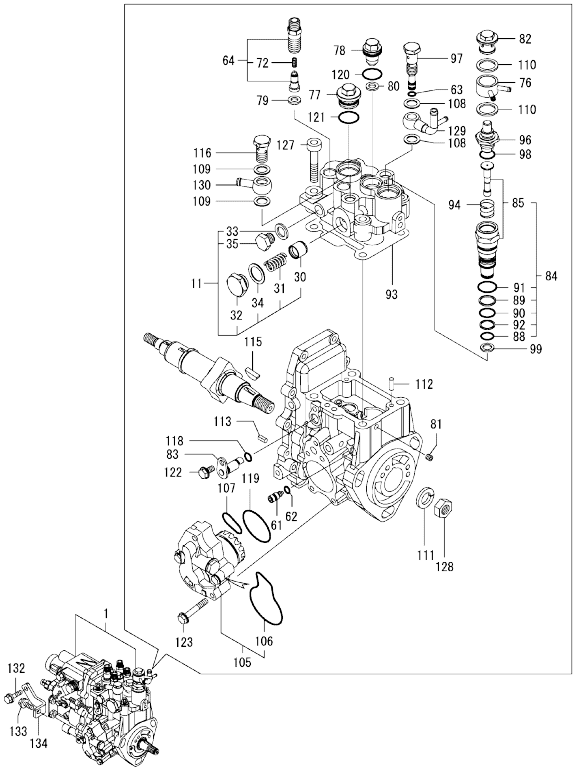

Remarks
(1)GOVERNOR ASSY(FIG.15) IS INCORPORATED IN THIS FUEL INJECTION PUMP.(REF.NO.1).

(A)=4TNV84T-DSA01 (D)=
(B)= (E)=
(C)= (F)=

No.	Lev.	Parts No.	Description	Q'ty (A)	(B)	(C)	(D)	(E)	(F)	I	R
1	1	729508-51310	PUMP ASSY, INJECTION	1							1
11	3	158553-51741	HEAD ASSY	1							
30	4	158601-51770	PISTON	1							
31	4	158552-51781	SPRING	1							
32	4	158601-51790	PLUG	1							
33	4	22190-120002	WASHER, SEAL 12	1							
34	4	22190-180002	WASHER, SEAL 18	1							
35	4	23887-120002	PLUG, 12	1							
61	3	158600-51270	STOPPER, TAPPET	1							
62	3	158563-51281	O-RING, 4D S6	1							
63	3	158563-51281	O-RING, 4D S6	1							
64	3	129509-51390	VALVE ASSY, DELIVERY	4							
72	4	158563-51330	SPRING, DELIVERY	4							
76	3	158553-51551	JOINT	1							
77	3	158601-51550	PLUG	1							
78	3	119802-51560	PLUG, BARREL	1							
79	3	158552-51571	GASKET	4							
80	3	158552-51571	GASKET	1							
81	3	158557-51570	PLUG	1							
82	3	158601-51570	PLUG	1							
83	3	158552-51580	LIFTER	1							
84	3	119802-51590	TIMER SET	1							
85	4	119802-51600	TIMER ASSY	1							
88	4	158553-51670	O-RING, 1011	1							
89	4	119802-51680	RING, BACK UP	1							
90	4	119802-51690	O-RING	1							
91	4	24356-010200	O-RING, 4D1020	1							
92	4	24372-000150	RING, BACK UP T2P15	1							
93	3	158552-51600	GASKET	1							
94	3	158553-51630	SPRING, TIMER	1							
96	3	158553-51640	ELEMENT	1							
97	3	158601-51650	JOINT, OVER FLOW	1							
98	3	158553-51660	O-RING, P14	1							
99	3	158553-51680	GASKET	1							
105	3	158552-52100	PUMP ASSY, FUEL FEED	1							
106	4	158552-52500	O-RING	1							
107	3	158552-52310	O-RING	1							
108	3	22190-120002	WASHER, SEAL 12	2							
109	3	22190-120002	WASHER, SEAL 12	2							
110	3	22190-180002	WASHER, SEAL 18	2							
111	3	22217-140000	WASHER, SPRING 14	1							
112	3	22312-050140	PIN, PARALLEL M5X14	2							
113	3	22351-050010	PIN, SPRING 5.0X10	2							
115	3	119802-51090	KEY, 4X16	1							
116	3	23857-060000	BOLT, JOINT 6	1							
118	3	24311-000070	O-RING, 1AP7.0	1							
119	3	158552-52400	O-RING, 4E S42	1							
120	3	24356-010180	O-RING, 4D1018	1							
121	3	24356-010200	O-RING, 4D1020	1							
122	3	26106-060102	BOLT, M6X 10 PLATED	1							
123	3	158553-51770	BOLT	4							

N:Old ←Yes/No→ New. Q:Old ←No/Yes→ New. R:Old ←Yes/Yes→ New. S:Old ←No/No→ New. W:Add. Z:Discontinued. F:Interchangeable by set. K:Q'ty Change

++ CONTINUE ++

Copyright (C) YANMAR GLOBAL CS CO., LTD. All RightsReserved.

Fig.14. FUEL INJECTION PUMP

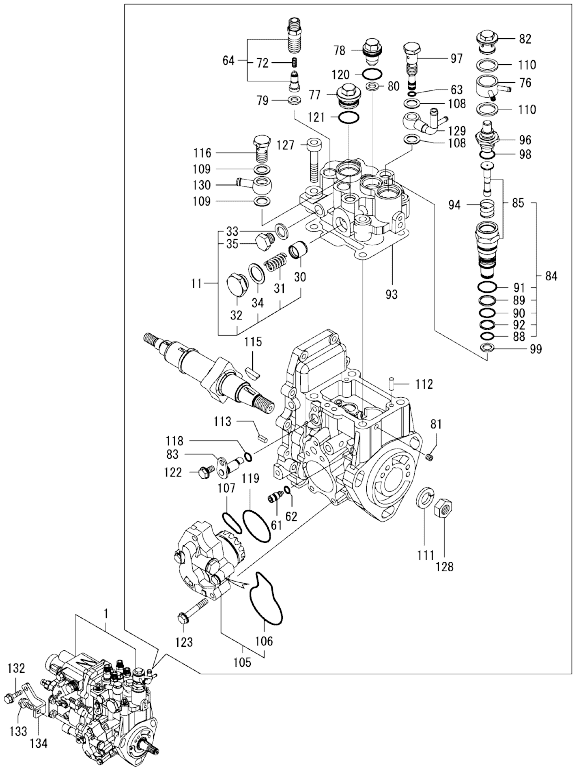

Remarks
(1)GOVERNOR ASSY(FIG.15) IS INCORPORATED IN THIS FUEL INJECTION PUMP.(REF.NO.1).

(A)=4TNV84T-DSA01
(B)=
(C)=
(D)=
(E)=
(F)=

No.	Lev.	Parts No.	Description	Q'ty (A)	(B)	(C)	(D)	(E)	(F)	I	R
127	3	26450-080452	BOLT, M8X 45	4							
128	3	26776-140002	NUT, LOCK M14	1							
129	2	158552-51670	JOINT, OVER FLOW	1							
130	2	129916-59020	JOINT, PIPE 12	1							
132	1	26106-080202	BOLT, M8X 20 PLATED	1							
133	1	26106-080302	BOLT, M8X 30 PLATED	1							
134	1	129508-51250	RETAINER, PUMP	1							

N:Old ←Yes/No→ New. Q:Old ←No/Yes→ New. R:Old ←Yes/Yes→ New. S:Old ←No/No→ New. W:Add. Z:Discontinued. F:Interchangeable by set. K:Q'ty Change

Copyright (C) YANMAR GLOBAL CS CO., LTD. All RightsReserved.

Fig.15. GOVERNOR

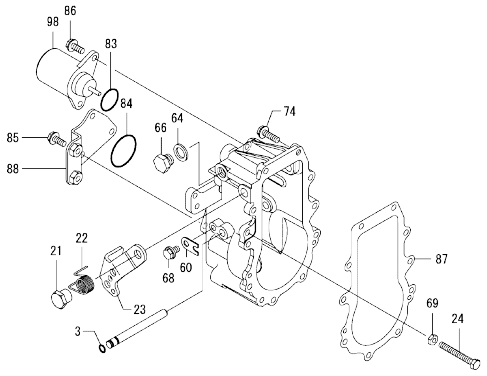

Remarks
* THIS FIGURE(GOVERNOR ASSY)IS INCORPORATED IN THE FUEL INJECTION PUMP ASSY(FIG.14).

(A)=4TNV84T-DSA01 (D)=
(B)= (E)=
(C)= (F)=

No.	Lev.	Parts No.	Description	Q'ty (A)	(B)	(C)	(D)	(E)	(F)	I	R
3	4	129155-51280	O-RING, S6	1							
21	4	129255-61410	NUT, LOCK	1							
22	4	119807-61420	SPRING, RETURN	1							
23	4	158552-61441	LEVER, REGULATOR	1							
24	4	129155-61460	BOLT, IDLE	1							
60	4	119660-61901	RETAINER, SHAFT	1							
64	4	22190-120000	WASHER, SEAL 12	1							
66	4	23887-120002	PLUG, 12	1							
68	4	26106-060102	BOLT, M6X 10 PLATED	1							
69	4	26756-060002	NUT, LOCK M6	1							
74	3	26106-060202	BOLT, M6X 20 PLATED	10							
83	3	158552-61900	O-RING	1							
84	3	24341-000360	O-RING, 1AS36.0	1							
85	3	26106-060142	BOLT, M6X 14 PLATED	3							
86	3	26106-060142	BOLT, M6X 14 PLATED	2							
87	3	158553-61050	GASKET	1							
88	2	129044-61060	COVER, GOVERNOR CASE	1							
98	2	119653-77950	SOLENOID, STOP	1							

N:Old ←Yes/No→ New. Q:Old ←No/Yes→ New. R:Old ←Yes/Yes→ New. S:Old ←No/No→ New. W:Add. Z:Discontinued. F:Interchangeable by set. K:Q'ty Change

Copyright (C) YANMAR GLOBAL CS CO., LTD. All RightsReserved.

Fig.16. FUEL INJECTION VALVE

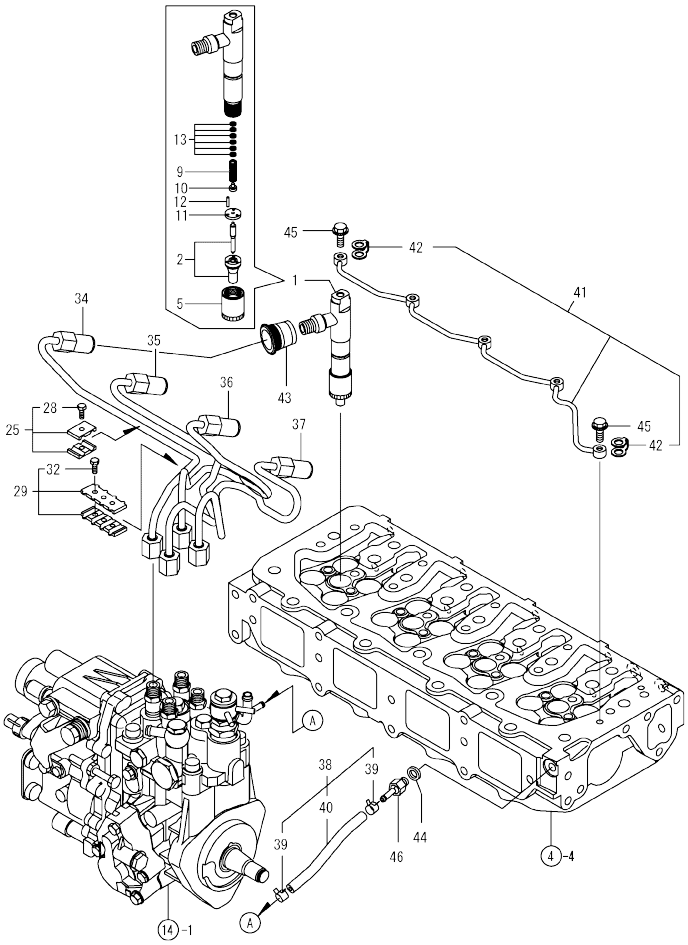

(A)=4TNV84T-DSA01
(B)=
(C)=
(D)=
(E)=
(F)=

No.	Lev.	Parts No.	Description	Q'ty (A)	(B)	(C)	(D)	(E)	(F)	I	R
1	1	729508-53100	VALVE ASSY,INJECTION	4							
2	2	129508-53000	VALVE ASSY,INJECTION	4							
5	2	114250-53080	NUT, NOZZLE D16.95	4							
9	2	114250-53120	SPRING, NOZZLE	4							
10	2	114250-53130	SEAT, SPRING	4							
11	2	114250-53140	PLATE	4							
12	2	114250-53210	PIN	8							
13	2	114250-53400	SHIM SET	4							
25	1	119305-59120	RETAINER, PIPE	2							
28	2	129150-59131	BOLT, M4X14	2							
29	1	129550-59120	RETAINER, PIPE	1							
32	2	129150-59131	BOLT, M4X14	2							
34	1	129508-59910	PIPE ASSY, INJECTION	1							
35	1	129508-59920	PIPE ASSY, INJECTION	1							
36	1	129508-59930	PIPE ASSY, INJECTION	1							
37	1	129508-59940	PIPE ASSY, INJECTION	1							
38	1	129508-59570	PIPE ASSY, RETURN	1							
39	2	124722-59050	CLIP, HOSE 9	2							
40	2	129508-59510	PIPE, FUEL RETURN	1							
41	1	129508-59550	PIPE ASSY, RETURN	1							
42	2	123907-59550	GASKET	5							
43	1	123907-11601	SEAL	4							
44	1	22190-080002	WASHER, SEAL 6	1							
45	1	123907-59540	BOLT, PIPE JOINT M6	5							
46	1	123907-59560	JOINT	1							

N:Old ←Yes/No→ New. Q:Old ←No/Yes→ New. R:Old ←Yes/Yes→ New. S:Old ←No/No→ New. W:Add. Z:Discontinued. F:Interchangeable by set. K:Q'ty Change

Copyright (C) YANMAR GLOBAL CS CO., LTD. All RightsReserved.

Fig.17. FUEL LINE

(A)=4TNV84T-DSA01
(B)=
(C)=
(D)=
(E)=
(F)=

No.	Lev.	Parts No.	Description	Q'ty (A)	(B)	(C)	(D)	(E)	(F)	I	R
1	1	129004-55612	BRACKET, FILTER	1							
2	1	119802-55810	FILTER,FO	1							
2-1	1	129004-55810	FILTER, FUEL	1						N	
	(A=E33828)										
3	1	26106-080302	BOLT, M8X 30 PLATED	2							
4	1	129210-59110	HOSE ASSY, FUEL	1							
5	2	124766-59050	CLAMP, HOSE 11.5	2							
6	2	105025-59560	HOSE, FUEL	1							
7	1	129210-59160	HOSE ASSY, FUEL	1							
8	2	124766-59050	CLAMP, HOSE 11.5	2							
9	2	129612-59520	HOSE, FUEL	1							
10	1	119225-52102	PUMP, FUEL FEED	1							1
11	1	129242-55700	SEPARATOR ASSY,WATER	1							1
12	2	129242-55720	CUP, SEPARATOR	1							1
13	2	129242-55730	ELEMENT, FUEL	1							1
14	2	129242-55740	PLUG, DRAIN	1							1
15	2	129242-55750	VALVE, AIR VENT	1							1
16	2	129242-55760	GASKET, PLUG	1							1
17	2	129242-55770	FLOAT	1							1
18	2	24311-000160	O-RING, 1AP16.0	1							1
19	2	24321-000750	O-RING, 1AG75.0	1							1

Remarks
(1)OPTIONAL PART.

N:Old $\frac{\text{Yes}}{\text{No}}$ New. Q:Old $\frac{\text{No}}{\text{Yes}}$ New. R:Old $\frac{\text{Yes}}{\text{Yes}}$ New. S:Old $\frac{\text{No}}{\text{No}}$ New. W:Add. Z:Discontinued. F:Interchangeable by set. K:Q'ty Change

Copyright (C) YANMAR GLOBAL CS CO., LTD. All RightsReserved.

Fig.18. STARTING MOTOR

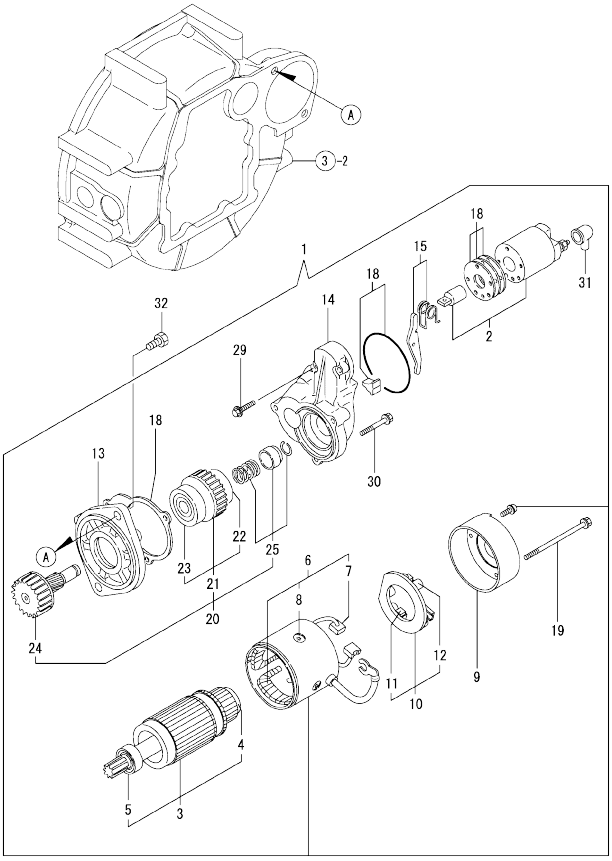

(A)=4TNV84T-DSA01
(B)=
(C)=
(D)=
(E)=
(F)=

No.	Lev.	Parts No.	Description	Q'ty (A)	(B)	(C)	(D)	(E)	(F)	I	R
1	1	129136-77011	STARTER	1							
2	2	129136-77310	SWITCH ASSY	1							
3	2	129900-77400	ARMATURE ASSY	1							
4	3	X2130350900	BEARING, BALL	1							
5	3	X2114255110	BEARING, BALL	1							
6	2	129900-77440	COIL ASSY, FIELD	1							
7	3	129900-77450	BRUSH	2							
8	3	171008-77450	SCREW	4							
9	2	129900-77460	COVER	1							
10	2	129900-77480	HOLDER ASSY, BRUSH	1							
11	3	129900-77450	BRUSH	2							
12	3	129400-77490	SPRING	4							
13	2	171008-77510	CASE, GEAR	1							
14	2	129136-77520	HOUSING	1							
15	2	171008-77540	LEVER SET	1							
18	2	129400-77571	COVER ASSY, DUST	1							
19	2	129900-77640	BOLT, THROUGH	2							
20	2	171008-77650	PINION ASSY	1							
21	3	X2114555500	CLUTCH ASSY	1							
22	4	X2114955020	BEARING, BALL	1							
23	4	X2240410100	BEARING, BALL	1							
24	3	171008-77660	SHAFT	1							
25	3	171008-77670	STOPPER SET	1							
29	2	26106-060322	BOLT, M6X 32 PLATED	2							
30	2	26106-060402	BOLT, M6X 40 PLATED	3							
31	2	171008-77750	COVER	1							
32	1	26116-120252	BOLT, M12X 25 PLATED	2							

N:Old ←Yes/No→ New. Q:Old ←No/Yes→ New. R:Old ←Yes/Yes→ New. S:Old ←No/No→ New. W:Add. Z:Discontinued. F:Interchangeable by set. K:Q'ty Change

Copyright (C) YANMAR GLOBAL CS CO., LTD. All RightsReserved.

Fig.19. GENERATOR

(A)=4TNV84T-DSA01
(B)=
(C)=
(D)=
(E)=
(F)=

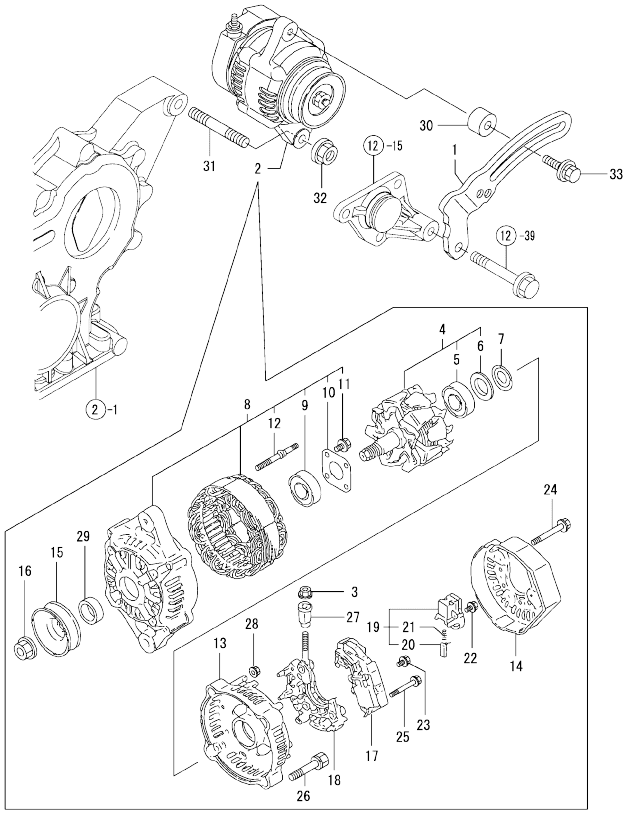

No.	Lev.	Parts No.	Description	Q'ty (A)	(B)	(C)	(D)	(E)	(F)	I	R
1	1	129064-77330	ADJUSTER	1							
2	1	129423-77200	GENERATOR, 12V-40A	1							
3	2	X9490561001	NUT	1							
4	2	119620-77380	ROTOR ASSY	1							
5	3	119620-79240	BEARING, BALL	1							
6	3	119620-79250	COVER	1							
7	2	119620-79360	WASHER, THRUST	1							
8	2	119620-77421	FRAME ASSY, DRIVE	1							
9	3	119620-79200	BEARING, BALL	1							
10	3	119620-79210	PLATE, RETAINER	1							
11	3	119620-79220	SCREW	4							
12	3	119620-79230	STUD	2							
13	2	119620-77440	FRAME ASSY	1							
14	2	129240-79300	COVER	1							
15	2	119620-77461	PULLEY	1							
16	2	119620-77471	NUT	1							
17	2	129423-77710	REGULATOR ASSY	1							
18	2	119620-79260	HOLDER	1							
19	2	119620-79270	HOLDER, BRUSH	1							
20	3	119620-77480	BRUSH ASSY	2							
21	3	119620-79280	SPRING	2							
22	2	119620-79290	SCREW	1							
23	2	119620-79300	SCREW	1							
24	2	119620-79310	BOLT	3							
25	2	119620-79320	SCREW	2							
26	2	119620-79330	BOLT	2							
27	2	119620-79340	BUSH, INSULATION	1							
28	2	119620-79350	NUT	2							
29	2	119620-77490	COLLAR	1							
30	1	129067-77340	SPACER	1							
31	1	129795-01900	STUD	1							
32	1	26306-100002	NUT, M10	1							
33	1	129972-77341	BOLT, ADJUSTER L=50	1							

N:Old ←Yes/No→ New. Q:Old ←No/Yes→ New. R:Old ←Yes/Yes→ New. S:Old ←No/No→ New. W:Add. Z:Discontinued. F:Interchangeable by set. K:Q'ty Change

Copyright (C) YANMAR GLOBAL CS CO., LTD. All RightsReserved.

Fig.20. ELECTRIC PARTS

(A)=4TNV84T-DSA01
(B)=
(C)=
(D)=
(E)=
(F)=

No.	Lev.	Parts No.	Description	Q'ty (A)	(B)	(C)	(D)	(E)	(F)	I	R
1	1	119946-91010	CORD, EXTENSION	1							
2	1	119888-91026	HARNESS, WIRE	1							
2-1	1	119888-91027	HARNESS, WIRE	1							N
	(A=*2008.10)										
3	1	119888-91120	SUPPORT	2							
4	1	119888-91202	PANEL ASSY	1							
5	2	104507-07190	LABEL, YANMAR	1							
6	2	119888-91221	PANEL ASSY	1							
7	3	124732-77720	LAMP, CHARGING	3							
8	3	171010-77850	THERMOSTAT	1							
9	3	128300-77920	TIMER	1							
10	3	124559-77971	LAMP, PILOT	1							
11	3	119888-91032	HARNESS, WIRE	1							
12	3	171080-91101	TACHOMETER	1							
13	3	119888-91110	BODY, PANEL	1							
14	3	171090-91010	GAUGE	1							
15	3	121400-91520	ABSORBER	4							
16	3	121400-91530	SPACER	4							
17	3	119888-91610	LABEL, CW & OIL LAMP	1							
18	3	119888-91620	LABEL, KEY SWITCH	1							
19	3	26106-060102	BOLT, M6X 10 PLATED	1							
20	3	933110-00100	SWITCH ASSY, STARTER	1							
22	4	933110-00301	KEY ASSY	1							
25	3	129211-77920	TIMER	1							
26	1	129150-91400	GEAR	1							
28	2	24341-000240	O-RING, 1AS24.0	1							
29	1	119643-66900	DIODE	1							
30	1	124737-91420	CABLE, TACHOMETER	1							
31	1	119650-77910	RELAY ASSY, GLOW	1							
34	1	128300-77920	TIMER	1							
35	1	129211-77920	TIMER	1							

Remarks
* THIS FIGURE(ELECTRIC PARTS ASSY)IS
OPTIONAL PART.

N:Old ←Yes/No→ New. Q:Old ←No/Yes→ New. R:Old ←Yes/Yes→ New. S:Old ←No/No→ New. W:Add. Z:Discontinued. F:Interchangeable by set. K:Q'ty Change

Copyright (C) YANMAR GLOBAL CS CO., LTD. All RightsReserved.

Fig.21. GASKET SET & TOOLS

(A)=4TNV84T-DSA01 (D)=
(B)= (E)=
(C)= (F)=

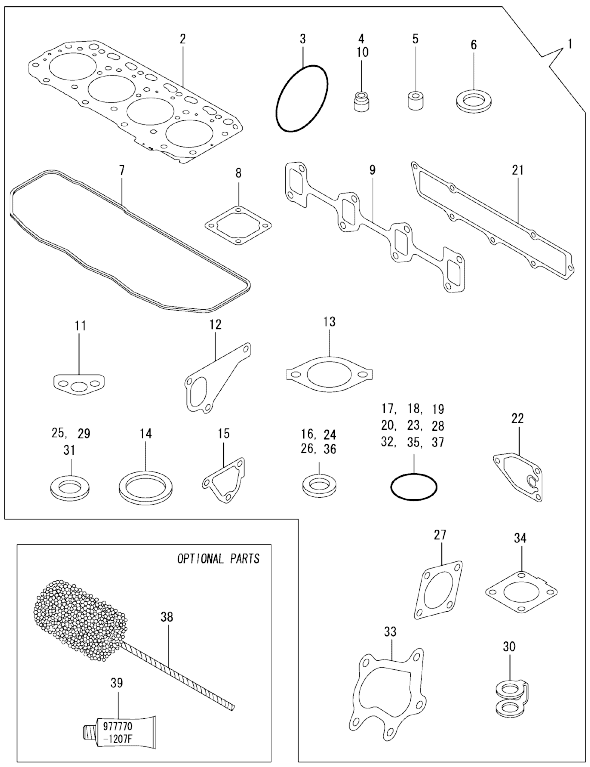

No.	Lev.	Parts No.	Description	Q'ty (A)	(B)	(C)	(D)	(E)	(F)	I	R
1	1	729508-92910	GASKET SET	1							1
2	2	129508-01330	GASKET, HEAD	1							
3	2	121850-51960	O-RING	1							
4	2	119717-11340	SEAL, VALVE STEM	8							
5	2	119802-11870	PROTECTOR, NOZZLE	4							
6	2	119625-11880	SEAT, NOZZLE	4							
7	2	129508-11310	GASKET, BONNET	1							
8	2	129150-77511	GASKET	1							
9	2	129550-13110	GASKET	1							
10	2	119717-11350	SEAL, VALVE STEM	8							
11	2	129150-35042	GASKET	1							
12	2	129486-42021	GASKET, WATER PUMP	1							
13	2	129795-49551	GASKET	1							
14	2	129150-49811	GASKET, THERMOSTAT	1							
15	2	124395-49840	GASKET	1							
16	2	22190-080002	WASHER, SEAL 6	3							
17	2	24311-000120	O-RING, 1AP12.0	7							
18	2	24311-000320	O-RING, 1AP32.0	2							
19	2	24341-000240	O-RING, 1AS24.0	1							
20	2	129486-42140	O-RING, G30	1							
21	2	129508-12110	GASKET, MANIFOLD	1							
22	2	129150-35111	GASKET	1							
23	2	119609-32040	O-RING, P16	4							
24	2	22190-100002	WASHER, SEAL 10	2							
25	2	23414-080000	GASKET, 8X1.0	1							
26	2	22190-220002	WASHER, SEAL 22	1							
27	2	124240-01883	GASKET	1							
28	2	24321-000800	O-RING, 1AG80.0	1							
29	2	23414-100000	GASKET, 10X1.0	2							
30	2	123907-59550	GASKET	5							
31	2	124465-44950	GASKET, 16	1							
32	2	24341-000400	O-RING, 1AS40.0	1							
33	2	129508-18090	GASKET	1							
34	2	129508-18080	GASKET	1							
35	2	24314-000160	O-RING, 4CP16.0	1							
36	2	129150-49360	GASKET	1							
37	2	129508-33050	O-RING	1							
38	1	129400-92420	HONE	1							1
39	1	977770-1207F	GASKET, LIQUID	1							1

Remarks
(1)OPTIONAL PART.

N:Old $\frac{\text{Yes}}{\text{No}}$ New. Q:Old $\frac{\text{No}}{\text{Yes}}$ New. R:Old $\frac{\text{Yes}}{\text{Yes}}$ New. S:Old $\frac{\text{No}}{\text{No}}$ New. W:Add. Z:Discontinued. F:Interchangeable by set. K:Q'ty Change

Copyright (C) YANMAR GLOBAL CS CO., LTD. All RightsReserved.

Parts No. Index

Parts No.	Fig. No.	Ref. No.
104507-07190	20	5
105025-59560	17	6
114250-39450	11	8
114250-53080	16	5
114250-53120	16	9
114250-53130	16	10
114250-53140	16	11
114250-53210	16	12
114250-53400	16	13
118400-44670	13	8
118400-44720	13	6
119005-12571	5	14
119131-18320	6	3
119225-52102	17	10
119255-44660	13	11
119305-59120	16	25
119609-32040	2	17
	21	23
119620-01750	3	22
119620-77380	19	4
119620-77421	19	8
119620-77440	19	13
119620-77461	19	15
119620-77471	19	16
119620-77480	19	20
119620-77490	19	29
119620-79200	19	9
119620-79210	19	10
119620-79220	19	11
119620-79230	19	12
119620-79240	19	5
119620-79250	19	6
119620-79260	19	18
119620-79270	19	19
119620-79280	19	21
119620-79290	19	22
119620-79300	19	23
119620-79310	19	24
119620-79320	19	25
119620-79330	19	26
119620-79340	19	27
119620-79350	19	28
119620-79360	19	7
119625-11880	4	27
	21	6
119640-01640	3	9
119643-66900	20	29
119650-77910	20	31
119653-77950	15	98
119660-61901	15	60

Parts No.	Fig. No.	Ref. No.
119717-11190	4	24
119717-11340	4	18
	21	4
119717-11350	4	19
	21	10
119717-11800	4	25
119773-91501	11	30
119802-01561	2	13
119802-03070	4	51
119802-11870	4	46
	21	5
119802-13650	6	4
119802-13670	6	5
119802-13820	6	6 -1
119802-21202	9	5
119802-21650	9	9
119802-25051	7	9
119802-25071	7	13
119802-25101	7	10
119802-25901	7	15
119802-32070	2	8
119802-32100	2	7
119802-32130	2	20
119802-35110	10	9
		10 B
119802-39500	11	18
119802-49113	12	10
119802-49730	12	32
119802-51090	14	115
119802-51560	14	78
119802-51590	14	84
119802-51600	14	85
119802-51680	14	89
119802-51690	14	90
119802-55810	17	2
119807-61420	15	22
119808-12540	5	17
119865-21600	9	16
119865-42290	12	21
119888-01601	3	2
119888-21450	9	41
119888-91026	20	2
119888-91027	20	2 -1
119888-91032	20	11
119888-91110	20	13
119888-91120	20	3
119888-91202	20	4
119888-91221	20	6
119888-91610	20	17
119888-91620	20	18

Parts No.	Fig. No.	Ref. No.
119934-01800	2	6
119940-59130	10	22
119946-91010	20	1
121023-01551	2	28
121111-21501	9	12
121250-44901	12	41
121252-39150	11	16
121256-44600	13	3
121400-91520	20	15
121400-91530	20	16
121520-34810	10	2
121550-23200	9	29
121850-21680	9	11
121850-42410	12	8
121850-51960	2	21
	21	3
123901-39820	11	22
123907-11550	4	3
123907-11601	16	43
123907-11830	4	23
123907-59540	16	45
123907-59550	16	42
	21	30
123907-59560	16	46
124060-01050	1	14
124070-13300	11	20
124085-35350	10	26 -2
124160-01751	2	14
	4	48
124160-01910	1	13
		15
124160-11360	4	59
124160-39140	11	9
124223-39900	11	19
124240-01871	2	15
		32
124240-01883	2	33
	21	27
124250-49351	12	42
124395-49840	12	17
	21	15
124450-44510	13	12
124450-44530	13	14
124450-44550	13	17
124450-44560	13	15
124465-44950	12	40
	21	31
124559-77971	20	10
124722-59050	12	33
		36

Parts No.	Fig. No.	Ref. No.
124722-59050	16	39
124732-77720	20	7
124737-91420	20	30
124766-59050	17	5
		8
128300-77920	20	9
		34
129001-01250	1	11
129001-02931	1	28
129001-32330	2	11
129001-91841	2	22
129004-01190	1	33
129004-22500	9	19
129004-22950	9	35
129004-34802	10	1
129004-42040	12	15
129004-49610	12	30
129004-49620	12	34
129004-49711	12	31
129004-49721	12	35
129004-55612	17	1
129004-55810	17	2 -1
129005-01520	2	1
		12
129005-59830	11	12
129006-03120	4	53
129006-35100	10	8
		10 A
129006-44480	10	14
129044-61060	15	88
129062-12560	5	15
129064-77330	19	1
129067-77340	19	30
129100-01580	3	1
		15
	9	2
129100-01640	3	16
129100-23910	9	32
129100-42051	12	3
129100-42121	12	4
129103-49301	10	15
129107-44590	13	7
129120-77502	5	9
129136-77011	18	1
129136-77310	18	2
129136-77520	18	14
129150-01200	1	31
129150-01650	3	17
129150-02020	1	7
129150-02450	7	4

Parts No. Index

Parts No.	Fig. No.	Ref. No.
129150-02871	1	34
129150-02931	1	25
129150-02941	1	37
129150-03070	4	52
129150-03090	4	64
129150-11230	4	36
		40
129150-11750	4	22
		37
		41
129150-14101	7	7
129150-14200	7	1
129150-14400	7	2
129150-23601	9	30
129150-23611	9	39
129150-25301	7	16
129150-35042	10	3
	21	11
129150-35111	10	12
	21	22
129150-35170	10	13
129150-49360	12	43
	21	36
129150-49811	12	25
	21	14
129150-59131	16	28
		32
129150-77511	5	10
	21	8
129150-91400	20	26
129155-49801	12	24
129155-51280	15	3
129155-61460	15	24
129202-22300	9	23
129210-59110	17	4
129210-59160	17	7
129211-77920	20	25
		35
129240-79300	19	14
129242-55700	17	11
129242-55720	17	12
129242-55730	17	13
129242-55740	17	14
129242-55750	17	15
129242-55760	17	16
129242-55770	17	17
129255-61410	15	21
129350-49530	12	26
129400-01730	3	6
129400-01770	3	8

Parts No.	Fig. No.	Ref. No.
129400-77490	18	12
129400-77571	18	18
129400-92420	21	38
129403-13120	6	2
129403-42380	12	20
129417-33110	10	26
129417-33111	10	26 -1
129417-35150	10	10
		10 C
129418-18320	8	2
129418-32320	2	10
129423-77200	19	2
129423-77710	19	17
129430-26070	7	21
129436-35070	10	4 -1
129436-35091	10	4
129486-01670	3	19
129486-35210	3	4
129486-42021	12	14
	21	12
129486-42140	12	16
	21	20
129488-21590	9	13
129508-01330	1	32
	21	2
129508-03010	4	50
129508-11100	4	11
129508-11110	4	15
129508-11130	4	16
129508-11180	4	17
129508-11241	4	28
129508-11250	4	29
129508-11260	4	31
129508-11270	4	32
129508-11280	4	33
129508-11310	4	56
	21	7
129508-11350	4	49
129508-11650	4	34
129508-11660	4	38
129508-11700	4	4
129508-11820	4	12
129508-11900	4	62
129508-11920	4	42
129508-12060	5	1
129508-12080	5	12
129508-12100	5	2
129508-12110	5	4
	21	21
129508-12560	5	19

Parts No.	Fig. No.	Ref. No.
129508-14580	7	3
129508-18010	8	4
129508-18080	8	1
	21	34
129508-18090	8	5
	21	33
129508-21002	9	1
129508-22080	9	17
129508-22900	9	33
129508-32111	2	18
129508-32120	2	19
129508-33010	10	6
129508-33031	10	6 -1
129508-33050	10	7
	21	37
129508-33060	10	7 -1
129508-35100	10	8 -1
129508-35150	10	10 D
129508-39450	11	17
129508-39600	11	21
129508-42001	12	1
129508-44520	13	4
129508-44550	13	5
129508-49030	10	16
129508-49040	10	20
129508-49070	13	20
129508-51250	14	134
129508-53000	16	2
129508-59510	16	40
129508-59550	16	41
129508-59570	16	38
129508-59910	16	34
129508-59920	16	35
129508-59930	16	36
129508-59940	16	37
129509-51390	14	64
129550-13110	6	1
	21	9
129550-59120	16	29
129553-39650	11	7
129601-44560	13	18 -1
129601-44570	13	18
129602-44600	13	9
129602-49010	13	19
129612-12650	5	18
129612-44700	12	22 -1
129612-59520	17	9
129655-44740	12	22
129672-11510	4	20
129688-01780	3	8 -1

Parts No.	Fig. No.	Ref. No.
129693-44310	6	6
129792-39410	11	1
129795-01780	3	18
129795-01900	19	31
129795-01950	2	16
129795-02412	1	5
129795-21661	9	10
129795-49551	12	27
	21	13
129900-07900	4	1
129900-12530	5	16
129900-32130	2	9
129900-77400	18	3
129900-77440	18	6
129900-77450	18	7
		11
129900-77460	18	9
129900-77480	18	10
129900-77640	18	19
129907-11950	4	47
129916-49740	12	13
129916-59020	14	130
129946-12510	5	13
129972-77341	19	33
158552-51151	7	18
158552-51571	14	79
		80
158552-51580	14	83
158552-51600	14	93
158552-51670	14	129
158552-51781	14	31
158552-52100	14	105
158552-52310	14	107
158552-52400	14	119
158552-52500	14	106
158552-61441	15	23
158552-61900	15	83
158553-51551	14	76
158553-51630	14	94
158553-51640	14	96
158553-51660	14	98
158553-51670	14	88
158553-51680	14	99
158553-51741	14	11
158553-51770	14	123
158553-61050	15	87
158557-51570	14	81
158563-51281	14	62
		63
158563-51330	14	72

Parts No. Index

Parts No.	Fig. No.	Ref. No.
158600-51270	14	61
158601-51550	14	77
158601-51570	14	82
158601-51650	14	97
158601-51770	14	30
158601-51790	14	32
171008-03990	10	17
		24
171008-77450	18	8
171008-77510	18	13
171008-77540	18	15
171008-77650	18	20
171008-77660	18	24
171008-77670	18	25
171008-77750	18	31
171010-77850	20	8
171051-01921	1	6
171056-49120	10	25
171080-91101	20	12
171090-91010	20	14
171353-44760	12	37
171375-39601	11	29
22190-080002	11	10
		13
	16	44
	21	16
22190-100002	11	11
	21	24
22190-120000	15	64
22190-120002	14	33
		108
		109
22190-180002	14	34
		110
22190-220002	3	11
	21	26
22217-140000	7	19
	14	111
22252-000260	9	24
22312-050140	14	112
22351-030010	9	8
	11	26
22351-050010	14	113
22351-060012	4	63
22512-070140	7	8
	9	6
22857-500100	4	57
23000-025000	11	23
23000-048000	5	5
23000-060000	5	6

Parts No.	Fig. No.	Ref. No.
23000-060000	5	20
23000-080000	5	21
23010-038000	13	1
23010-044000	13	2
23061-070230	13	16
23080-015000	10	19
		23
23414-080000	12	29
	21	25
23414-100000	11	27
	21	29
23857-030000	11	14
23857-060000	14	116
23876-010000	12	11
23876-020000	4	13
	12	12
23876-030000	2	4
23876-040000	2	5
23887-120002	14	35
	15	66
24104-062054	9	43
24311-000070	14	118
24311-000120	4	60
		68
	21	17
24311-000160	17	18
24311-000320	2	23
	4	61
	21	18
24314-000160	21	35
24316-000160	11	24
24321-000750	17	19
24321-000800	7	22
	21	28
24341-000240	2	29
	20	28
	21	19
24341-000360	15	84
24341-000400	4	58
	21	32
24356-010180	14	120
24356-010200	14	91
		121
24372-000150	14	92
25152-003600	12	21 -1
26013-080222	5	22
		23
26014-060122	13	10
26106-060102	14	122
	15	68

Parts No.	Fig. No.	Ref. No.
26106-060102	20	19
26106-060142	15	85
		86
26106-060162	2	30
	11	25
26106-060202	15	74
26106-060322	18	29
26106-060402	12	38
	18	30
26106-080122	11	15
	12	23
26106-080142	7	17
26106-080162	2	24
		25
		34
	3	12
	4	2
	12	18
26106-080202	5	7
	10	11
	14	132
26106-080222	9	44
	12	28
26106-080252	3	13
	4	44
	7	23
26106-080302	14	133
	17	3
26106-080352	3	20
	5	11
	10	5
26106-080402	7	14
26106-080452	3	14
		14 -1
	12	39
26106-080502	3	24
	4	45
26106-080552	2	26
	10	5 -1
26106-080602	12	19
26106-080802	5	8
26106-100302	7	24
26116-120252	18	32
26206-100252	3	5
26206-100302	3	23
26226-080352	4	43
26306-080002	2	27
	8	3
26306-100002	19	32
26366-060002	11	28

Parts No.	Fig. No.	Ref. No.
26450-080452	14	127
26756-060002	15	69
26776-140002	7	20
	14	128
27241-120000	1	12
27241-300000	1	10
27241-400000	4	14
729402-23100	9	25
729508-01560	1	1
729508-51310	14	1
729508-53100	16	1
729508-92910	21	1
933110-00100	20	20
933110-00301	20	22
977770-1207F	2	31
	3	21
	4	65
	21	39
X2114255110	18	5
X2114555500	18	21
X2114955020	18	22
X2130350900	18	4
X2240410100	18	23
X9490561001	19	3