YANMAR

PARTS CATALOG

0CW10-M36400EN

Last update May., 2017

PREFACE

1. This arts Catalog carries all parts incorporated in YANMAR Model 4TNV84T-GGEA engine manufactured since May,2008.

2. Each illustration corresponds to the parts list on the following page.

3. When ordering parts, clearly write down the engine model and serial number, as well as the name and number of each part in your order sheet. This will help insure reliable delivery of the parts you have ordered.

Contents

0CW10-M36400

Fig. No.	Fig. Name
4TNV84T-GGEA	
1.	CYLINDER BLOCK
2.	GEAR HOUSING
3.	FLYWHEEL HOUSING & OIL SUMP
4.	CYLINDER HEAD & BONNET
5.	SUCTION MANIFOLD & AIR CLEANER
6.	EXHAUST MANIFOLD
7.	CAMSHAFT & DRIVING GEAR
8.	TURBINE
9.	CRANKSHAFT & PISTON
10.	LUB.OIL SYSTEM
11.	LUB.OIL LINE
12.	COOLING WATER SYSTEM
13.	FUEL INJECTION PUMP
14.	GOVERNOR
15.	FUEL INJECTION VALVE
16.	FUEL LINE
17.	STARTING MOTOR
18.	GENERATOR
19.	GASKET SET

Fig. No.	Fig. Name

0CW10-M36400 4TNV84T-GGEA

Fig.1. CYLINDER BLOCK

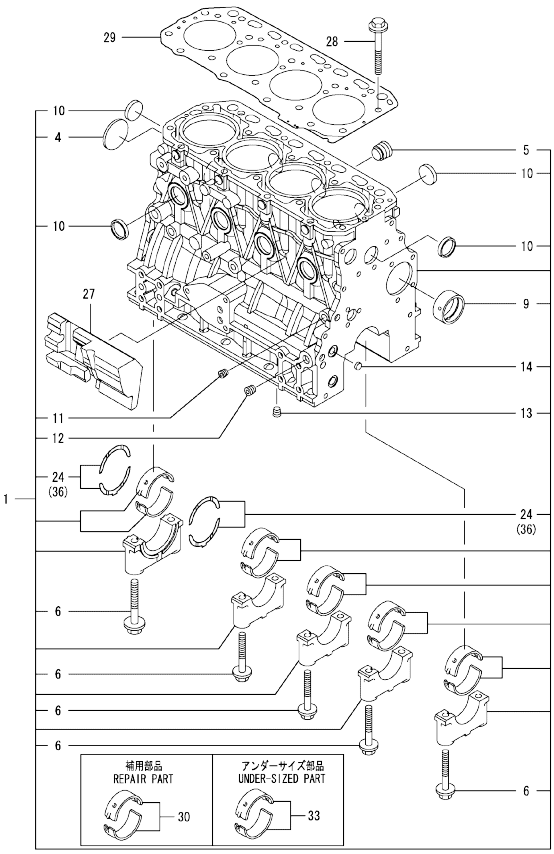

Remarks
(1) REPAIR PART.
(2) UNDER-SIZED(U.S=0.25)PART.
(3) OVER-SIZED(O.S=0.25)PART.

(A)=4TNV84T-GGEA (D)=
(B)= (E)=
(C)= (F)=

No.	Lev.	Parts No.	Description	Q'ty (A)	(B)	(C)	(D)	(E)	(F)	I	R
1	1	729508-01560	BLOCK ASSY, CYLINDER	1							
4	2	129001-01250	PLUG, 50	1							
5	2	171051-01921	PLUG, NPTF1	1							
6	2	129150-02020	BOLT, METAL CAP	10							
9	2	129795-02412	BUSH, CAMSHAFT	1							
10	2	27241-300000	PLUG 30	8							
11	2	124060-01050	PLUG, PT1/8	1							
12	2	124160-01910	PLUG, PT1/4	2							
13	2	124160-01910	PLUG, PT1/4	1							
14	2	27241-120000	PLUG, 12	2							
24	2	129150-02931	BEARING, THRUST	2							
27	1	129004-01190	SPACER	1							
28	1	129150-01200	BOLT, HEAD	18							
29	1	129508-01330	GASKET, HEAD	1							
30	1	129001-02931	BEARING, MAIN	5							1
33	1	129150-02871	BEARING, 0.25 US	5							2
36	1	129150-02941	BEARING, THRUST 0.25	1							3

N:Old ←Yes/No→ New. Q:Old ←No/Yes→ New. R:Old ←Yes/Yes→ New. S:Old ←No/No→ New. W:Add. Z:Discontinued. F:Interchangeable by set. K:Q'ty Change

Copyright (C) YANMAR CO., LTD. All RightsReserved.

0CW10-M36400 4TNV84T-GGEA

Fig.2. GEAR HOUSING

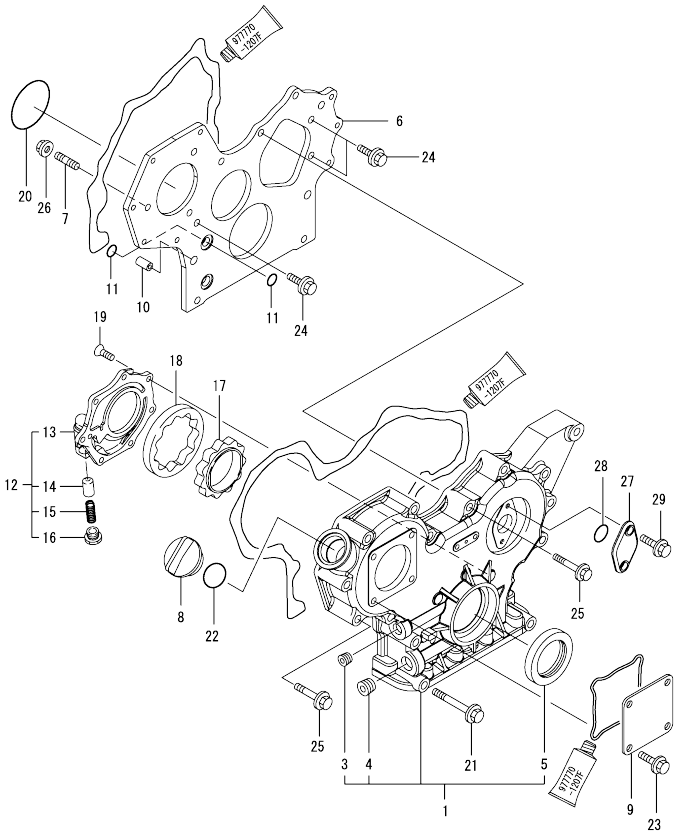

0CW10-M36400 Fig.2

(A)=4TNV84T-GGEA (D)=
(B)= (E)=
(C)= (F)=

No.	Lev.	Parts No.	Description	Q'ty (A)	(B)	(C)	(D)	(E)	(F)	I	R
1	1	729533-01500	CASE ASSY, GEAR	1							
3	2	23876-030000	PLUG, R03	1							
4	2	23876-040000	PLUG, R04	1							
5	2	119934-01800	SEAL, OIL	1							
6	1	119802-01520	FLANGE, GEAR CASE	1							
7	1	119802-01561	STUD, M8X25	3							
8	1	124160-01751	COVER, FILLER	1							
9	1	124240-01871	COVER	1							
10	1	129795-01950	PIPE, KNOCK L=18	2							
11	1	119609-32040	O-RING, P16	4							
12	1	119802-32100	COVER ASSY	1							
13	2	119802-32070	COVER	1							
14	2	129900-32130	VALVE, RELIEF	1							
15	2	129418-32320	SPRING	1							
16	2	129001-32330	PLUG	1							
17	1	129508-32111	ROTOR, INNER	1							
18	1	129508-32120	ROTOR, OUTER	1							
19	1	119802-32130	SCREW, M6X16	7							
20	1	121850-51960	O-RING	1							
21	1	129001-91841	BOLT, M8X85	3							
22	1	24311-000320	O-RING, 1AP32.0	1							
23	1	26106-080162	BOLT, M8X 16 PLATED	4							
24	1	26106-080162	BOLT, M8X 16 PLATED	3							
25	1	26106-080552	BOLT, M8X 55 PLATED	12							
26	1	26306-080002	NUT, M8	3							
27	1	121023-01551	COVER	1							
28	1	24341-000240	O-RING, 1AS24.0	1							
29	1	26106-060162	BOLT, M6X 16 PLATED	2							

N:Old ←Yes/No→ New. Q:Old ←No/Yes→ New. R:Old ←Yes/Yes→ New. S:Old ←No/No→ New. W:Add. Z:Discontinued. F:Interchangeable by set. K:Q'ty Change

Copyright (C) YANMAR CO., LTD. All RightsReserved.

Fig.3. FLYWHEEL HOUSING & OIL SUMP

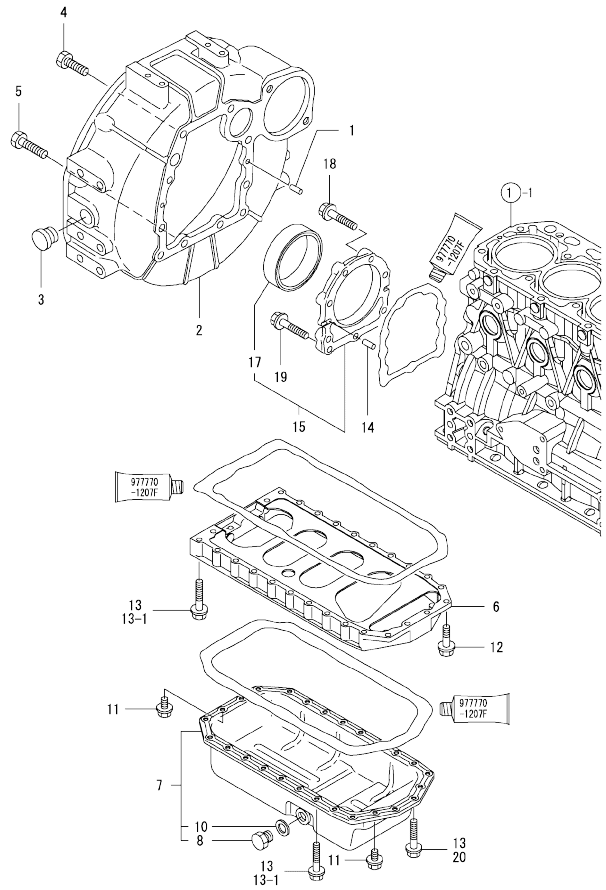

(A)=4TNV84T-GGEA (D)=
(B)= (E)=
(C)= (F)=

No.	Lev.	Parts No.	Description	Q'ty (A)	(B)	(C)	(D)	(E)	(F)	I	R
1	1	129100-01580	PIN, M8X16	2							
2	1	171420-01600	HOUSING, FLYWHEEL	1							
3	1	119620-01750	CAP	1							
4	1	26206-100252	BOLT, M10X 25 PLATED	6							
5	1	26206-100302	BOLT, M10X 30 PLATED	4							
6	1	129400-01730	SPACER, OIL SUMP	1							
7	1	129400-01770	SUMP ASSY, OIL	1							
7-1	1	129688-01780	OIL PAN ASSY, DEEP	1						N	
	(A=E51066)										
8	2	119640-01640	PLUG, DRAIN M22	1							
10	2	22190-220002	WASHER, SEAL 22	1							
11	1	26106-080162	BOLT, M8X 16 PLATED	4							
12	1	26106-080252	BOLT, M8X 25 PLATED	2							
13	1	26106-080452	BOLT, M8X 45 PLATED	24							
13-1	1	26106-080452	BOLT, M8X 45 PLATED	20						K	
	(A=FROM 1ST)										
14	1	129100-01580	PIN, M8X16	2							
15	1	129100-01640	CASE ASSY, OIL SEAL	1							
17	2	129795-01780	SEAL, OIL	1							
18	1	129486-01670	BOLT, M8X30	6							
19	1	26106-080352	BOLT, M8X 35 PLATED	3							
20	1	26106-080502	BOLT, M8X 50 PLATED	4						W	
	(A=FROM 1ST)										

N:Old ←Yes/No→ New. Q:Old ←No/Yes→ New. R:Old ←Yes/Yes→ New. S:Old ←No/No→ New. W:Add. Z:Discontinued. F:Interchangeable by set. K:Q'ty Change

Copyright (C) YANMAR CO., LTD. All RightsReserved.

Fig.4. CYLINDER HEAD & BONNET

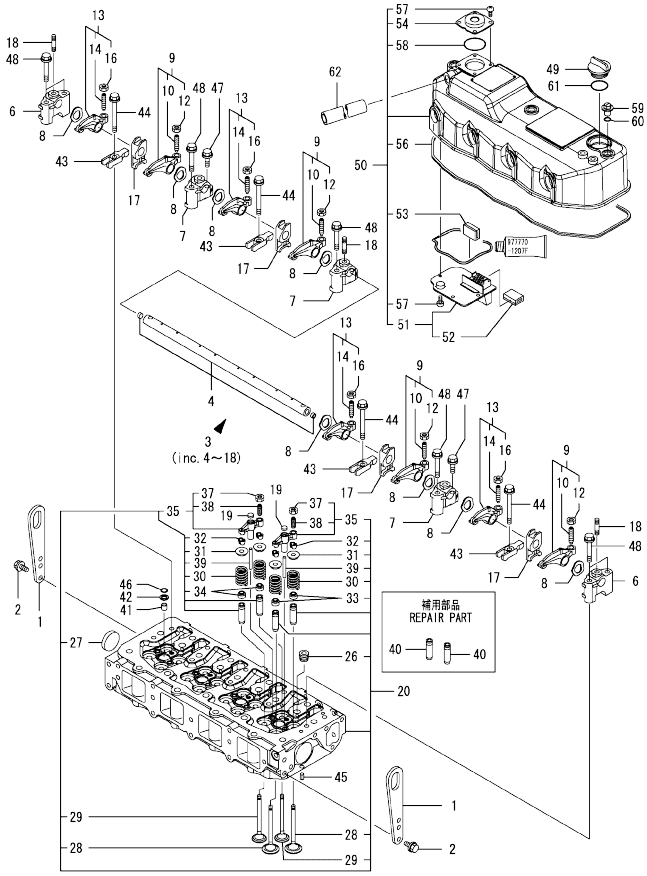

(A)=4TNV84T-GGEA
(B)=
(C)=
(D)=
(E)=
(F)=

No.	Lev.	Parts No.	Description	Q'ty (A)	(B)	(C)	(D)	(E)	(F)	I	R
1	1	129900-07900	LIFTER	2							
2	1	26106-080162	BOLT, M8X 16 PLATED	4							
3	1	129508-11241	SHAFT ASSY, ROCKER	1							
4	2	129508-11250	SHAFT, ROCKER ARM	1							
6	2	129508-11260	SUPPORT, ROCKER ARM	2							
7	2	129508-11270	SUPPORT, ROCKER ARM	3							
8	2	129508-11280	WASHER	8							
9	2	129508-11650	ARM, ROCKER	4							
10	3	129150-11230	SCREW, VALVE ADJUST	4							
12	3	129150-11750	NUT, M8	4							
13	2	129508-11660	ARM, ROCKER	4							
14	3	129150-11230	SCREW, VALVE ADJUST	4							
16	3	129150-11750	NUT, M8	4							
17	2	129508-11920	RETAINER	4							
18	2	26226-080352	STUD, M8X 35	3							
19	1	123907-11550	SEAT, VALVE BRIDGE	8							
20	1	129508-11700	HEAD ASSY, CYLINDER	1							
26	2	23876-020000	PLUG, R02	4							
27	2	27241-400000	PLUG, 40	2							
28	2	129508-11100	VALVE, INTAKE	8							
29	2	129508-11110	VALVE, EXHAUST	8							
30	2	129508-11130	SPRING, VALVE	16							
31	2	129508-11180	RETAINER, SPRING	16							
32	2	119717-11190	COTTER	32							
33	2	119717-11340	SEAL, VALVE STEM	8							
34	2	119717-11350	SEAL, VALVE STEM	8							
35	2	129672-11510	BRIDGE ASSY, VALVE	8							
37	3	129150-11750	NUT, M8	8							
38	3	123907-11830	ADJUSTER	8							
39	2	129508-11820	GUIDE	8							
40	1	119717-11800	GUIDE, VALVE	16							1
41	1	119802-11870	PROTECTOR, NOZZLE	4							
42	1	119625-11880	SEAT, NOZZLE	4							
43	1	129508-11900	RETAINER, NOZZLE	4							
44	1	129907-11950	BOLT, M8X75	4							
45	1	22351-060012	PIN, SPRING 6.0X12	2							
46	1	24311-000120	O-RING, 1AP12.0	4							
47	1	26106-080252	BOLT, M8X 25 PLATED	3							
48	1	26106-080502	BOLT, M8X 50 PLATED	7							
49	1	124160-01751	COVER, FILLER	1							
50	1	129508-11350	BONNET ASSY, HEAD	1							
51	2	129508-03010	PLATE	1							
52	3	119802-03070	BAFFLE, BREATHER	1							
53	2	129150-03070	BAFFLE, BREATHER	1							
54	2	129006-03120	COVER, DIAPHRAGM	1							
56	2	129508-11310	GASKET, BONNET	1							
57	2	22857-500100	SCREW, 5X10	8							
58	2	24341-000400	O-RING, 1AS40.0	1							
59	1	124160-11360	KNOB	3							
60	1	24311-000120	O-RING, 1AP12.0	3							
61	1	24311-000320	O-RING, 1AP32.0	1							

Remarks
(1) REPAIR PART.

N:Old ←Yes/No→ New. Q:Old ←No/Yes→ New. R:Old ←Yes/Yes→ New. S:Old ←No/No→ New. W:Add. Z:Discontinued. F:Interchangeable by set. K:Q'ty Change

++ CONTINUE ++

Copyright (C) YANMAR CO., LTD. All RightsReserved.

Fig.4. CYLINDER HEAD & BONNET

(A)=4TNV84T-GGEA
(B)=
(C)=
(D)=
(E)=
(F)=

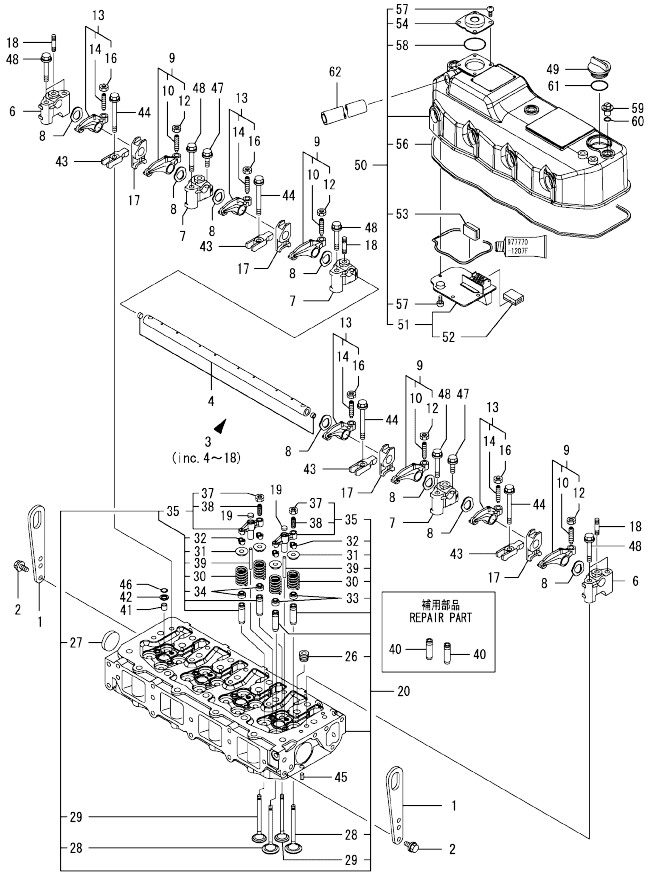

No.	Lev.	Parts No.	Description	Q'ty (A)	(B)	(C)	(D)	(E)	(F)	I	R
62	1	129150-03090	HOSE, ID16X2T	1							

Remarks
(1) REPAIR PART.

N:Old ←Yes/No→ New. Q:Old ←No/Yes→ New. R:Old ←Yes/Yes→ New. S:Old ←No/No→ New. W:Add. Z:Discontinued. F:Interchangeable by set. K:Q'ty Change

Copyright (C) YANMAR CO., LTD. All RightsReserved.

Fig.5. SUCTION MANIFOLD & AIR CLEANER

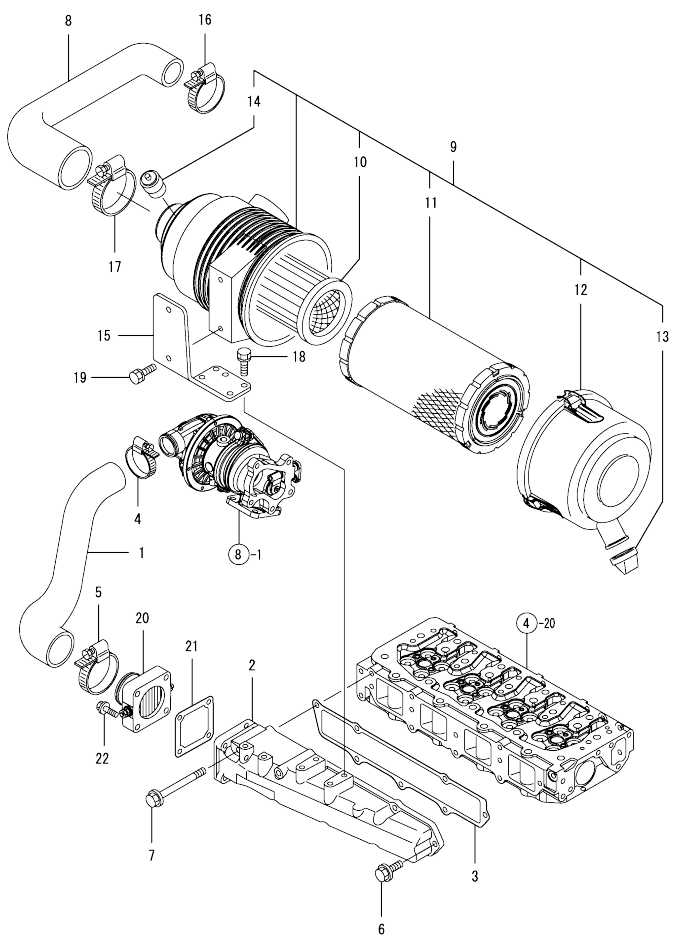

(A)=4TNV84T-GGEA (D)=
(B)= (E)=
(C)= (F)=

No.	Lev.	Parts No.	Description	Q'ty (A)	(B)	(C)	(D)	(E)	(F)	I	R
1	1	129508-12060	PIPE, AIR INTAKE	1							
2	1	129508-12100	MANIFOLD, AIR INTAKE	1							
3	1	129508-12110	GASKET, MANIFOLD	1							
4	1	23000-048000	CLAMP, 48	1							
5	1	23000-060000	CLAMP, 60	1							
6	1	26106-080202	BOLT, M8X 20 PLATED	5							
7	1	26106-080802	BOLT, M8X 80 PLATED	2							
8	1	129508-12080	PIPE, AIR INTAKE	1							
9	1	129946-12510	CLEANER ASSY, AIR	1							
10	2	119005-12571	ELEMENT	1							
11	2	129062-12560	ELEMENT	1							
12	2	129900-12530	COVER ASSY	1							
13	2	119808-12540	VALVE, UNLOADER	1							
14	2	126650-12680	INDICATOR	1							
15	1	129508-12560	BRACKET, AIR CLEANER	1							
16	1	23000-060000	CLAMP, 60	1							
17	1	23000-080000	CLAMP, 80	1							
18	1	26013-080222	BOLT, M8X 22	4							
19	1	26013-080222	BOLT, M8X 22	2							
20	1	129120-77502	HEATER	1							
21	1	129150-77511	GASKET	1							
22	1	26106-080352	BOLT, M8X 35 PLATED	4							

N:Old ←Yes/No→ New. Q:Old ←No/Yes→ New. R:Old ←Yes/Yes→ New. S:Old ←No/No→ New. W:Add. Z:Discontinued. F:Interchangeable by set. K:Q'ty Change

Copyright (C) YANMAR CO., LTD. All RightsReserved.

Fig.6. EXHAUST MANIFOLD

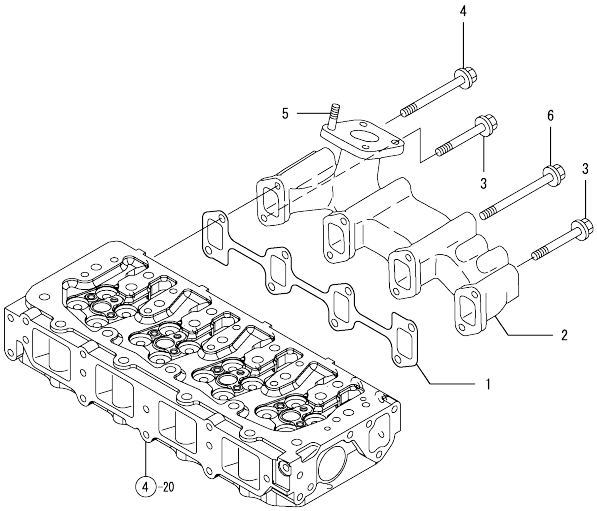

(A)=4TNV84T-GGEA (D)=
(B)= (E)=
(C)= (F)=

No.	Lev.	Parts No.	Description	Q'ty (A)	(B)	(C)	(D)	(E)	(F)	I	R
1	1	129550-13110	GASKET	1							
2	1	129403-13120	MANIFOLD, EXHAUST	1							
3	1	119802-13650	BOLT, M8X65	3							
4	1	119802-13670	BOLT, M8X85	1							
5	1	119131-18320	STUD, M8X22	4							
6	1	129693-44310	BOLT	4							
6-1	1	119802-13820	BOLT, M8X100 9.8T	4						N	
	(A=*2009.12)										

N:Old ←Yes/No→ New. Q:Old ←No/Yes→ New. R:Old ←Yes/Yes→ New. S:Old ←No/No→ New. W:Add. Z:Discontinued. F:Interchangeable by set. K:Q'ty Change

Copyright (C) YANMAR CO., LTD. All RightsReserved.

Fig.7. CAMSHAFT & DRIVING GEAR

(A)=4TNV84T-GGEA
(B)=
(C)=
(D)=
(E)=
(F)=

No.	Lev.	Parts No.	Description	Q'ty (A)	(B)	(C)	(D)	(E)	(F)	I	R
1	1	129150-14200	TAPPET	8							
2	1	129150-14400	ROD, PUSH L=178	8							
3	1	129508-14580	CAMSHAFT ASSY	1							
4	2	129150-02450	BEARING, THRUST	1							
6	2	129150-14101	GEAR, CAMSHAFT	1							
7	2	22512-070140	KEY, 7X 14	1							
8	1	26106-080142	BOLT, M8X 14 PLATED	2							
9	1	119802-25051	SHAFT, IDLE	1							
10	1	119802-25101	GEAR ASSY, IDLE	1							
13	1	119802-25071	BUSH, IDLE GEAR	1							1
14	1	26106-080402	BOLT, M8X 40 PLATED	3							
15	1	129150-25301	BOLT	4							
16	1	119802-25901	GEAR, PUMP	1							
17	1	158552-51151	FLANGE	1							
18	1	22217-140000	WASHER, SPRING 14	1							
19	1	26776-140002	NUT, LOCK M14	1							

Remarks
(1) REPAIR PART.

N:Old ←Yes/No→ New. Q:Old ←No/Yes→ New, R:Old ←Yes/Yes→ New, S:Old ←No/No→ New. W:Add. Z:Discontinued. F:Interchangeable by set. K:Q'ty Change

Copyright (C) YANMAR CO., LTD. All RightsReserved.

Fig.8. TURBINE

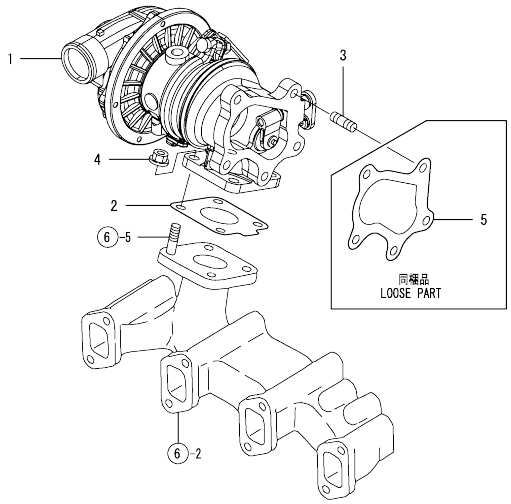

(A)=4TNV84T-GGEA (D)=
(B)= (E)=
(C)= (F)=

No.	Lev.	Parts No.	Description	Q'ty (A)	(B)	(C)	(D)	(E)	(F)	I	R
1	1	129508-18020	TURBINE, RHF4	1							
2	1	129508-18080	GASKET	1							
3	1	129418-18320	STUD, M8X20	5							
4	1	26306-080002	NUT, M8	5							
5	1	129508-18090	GASKET	1							

N:Old ◄Yes/No► New. Q:Old ◄No/Yes► New. R:Old ◄Yes/Yes► New. S:Old ◄No/No► New. W:Add. Z:Discontinued. F:Interchangeable by set. K:Q'ty Change

Copyright (C) YANMAR CO., LTD. All RightsReserved.

Fig.9. CRANKSHAFT & PISTON

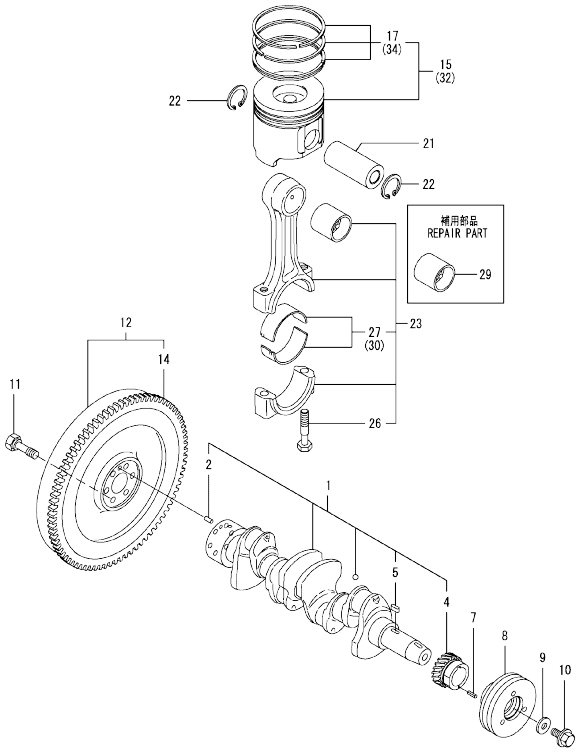

Remarks
(1) REPAIR PART.
(2) UNDER-SIZED(U.S=0.25)PART.
(3) OVER-SIZED(O.S=0.25)PART.

(A)=4TNV84T-GGEA (D)=
(B)= (E)=
(C)= (F)=

No.	Lev.	Parts No.	Description	Q'ty (A)	(B)	(C)	(D)	(E)	(F)	I	R
1	1	129508-21002	CRANKSHAFT ASSY	1							
2	2	129100-01580	PIN, M8X16	1							
4	2	119802-21202	GEAR, CRANKSHAFT	1							
5	2	22512-070140	KEY, 7X 14	1							
7	1	22351-030010	PIN, SPRING 3.0X10	1							
8	1	119802-21660	V-PULLEY, 120	1							
9	1	129795-21661	WASHER	1							
10	1	121850-21680	BOLT	1							
11	1	121111-21501	BOLT, FLYWHEEL	6							
12	1	171420-21590	FLYWHEEL ASSY	1							
14	2	124550-21600	GEAR, RING	1							
15	1	129508-22080	PISTON ASSY	4							
17	2	129004-22500	RING SET, PISTON	4							
21	1	129202-22300	PIN, PISTON D26 L70	4							
22	1	22252-000260	RING, 26	8							
23	1	729402-23100	ROD ASSY, CONNECTING	4							
26	2	121550-23200	BOLT, CONNECTING ROD	8							
27	2	129150-23601	BEARING, CRANK PIN	4							
29	1	129100-23910	BEARING, PISTON PIN	4							1
30	1	129150-23611	BEARING, 0.25 US	4							2
32	1	129508-22900	PISTON ASSY, 0.25 OS	4							3
34	2	129004-22950	RING SET, 0.25 OS	4							3

N:Old ←Yes/No→ New. Q:Old ←No/Yes→ New. R:Old ←Yes/Yes→ New. S:Old ←No/No→ New. W:Add. Z:Discontinued. F:Interchangeable by set. K:Q'ty Change

Copyright (C) YANMAR CO., LTD. All RightsReserved.

Fig.10. LUB.OIL SYSTEM

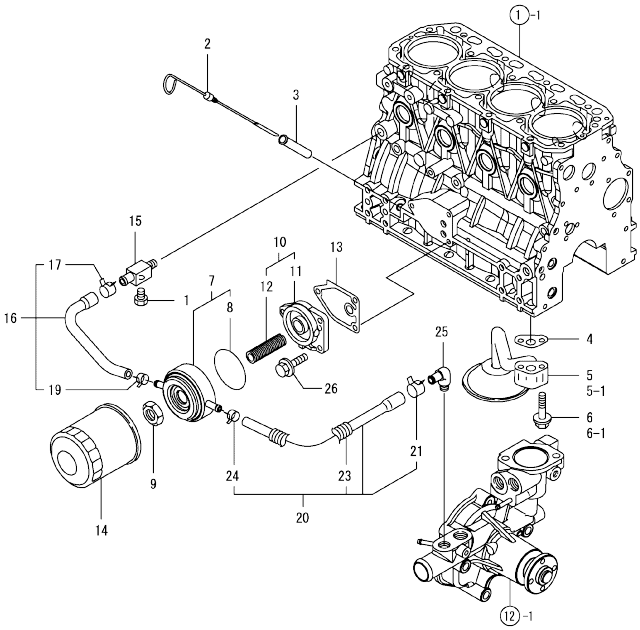

(A)=4TNV84T-GGEA (D)=
(B)= (E)=
(C)= (F)=

No.	Lev.	Parts No.	Description	Q'ty (A)	(B)	(C)	(D)	(E)	(F)	I	R
1	1	171056-49120	PLUG, DRAIN	1							
2	1	129004-34802	DIPSTICK, OIL	1							
3	1	121520-34810	GUIDE, DIPSTICK	1							
4	1	129150-35042	GASKET	1							
5	1	129436-35091	PIPE ASSY, OIL INLET	1							
5-1	1	129436-35070	PIPE ASSY	1						S	
	(A=EZZZZZ)										
6	1	26106-080352	BOLT, M8X 35 PLATED	2							
6-1	1	26106-080552	BOLT, M8X 55 PLATED	2						S	
	(A=EZZZZZ)										
7	1	129508-33010	COOLER ASSY, OIL	1							
8	2	129508-33050	O-RING	1							
9	1	129417-33110	NUT	1							
10	1	129006-35100	BRACKET ASSY, FILTER	1							
11	2	119802-35110	BRACKET, FILTER	1							
12	2	129417-35150	STUD, L=67	1							
13	1	129150-35111	GASKET	1							
14	1	119005-35170	FILTER, D80X100	1							1
15	1	129006-44480	JOINT	1							
16	1	129508-49030	PIPE ASSY, WATER	1							
17	2	171008-03990	CLIP, HOSE 18.5	1							
19	2	23080-015000	CLAMP, 15	1							
20	1	129508-49040	PIPE ASSY, WATER	1							
21	2	171008-03990	CLIP, HOSE 18.5	1							
23	2	119940-59130	TUBE, CORRUGATED	1							
24	2	23080-015000	CLAMP, 15	1							
25	1	129103-49301	ELBOW, PT1/4	1							
26	1	26106-080202	BOLT, M8X 20 PLATED	3							

Remarks
(1) REPAIR PART.

N:Old ←Yes/No→ New. Q:Old ←No/Yes→ New. R:Old ←Yes/Yes→ New. S:Old ←No/No→ New. W:Add. Z:Discontinued. F:Interchangeable by set. K:Q'ty Change

Copyright (C) YANMAR CO., LTD. All RightsReserved.

Fig.11. LUB.OIL LINE

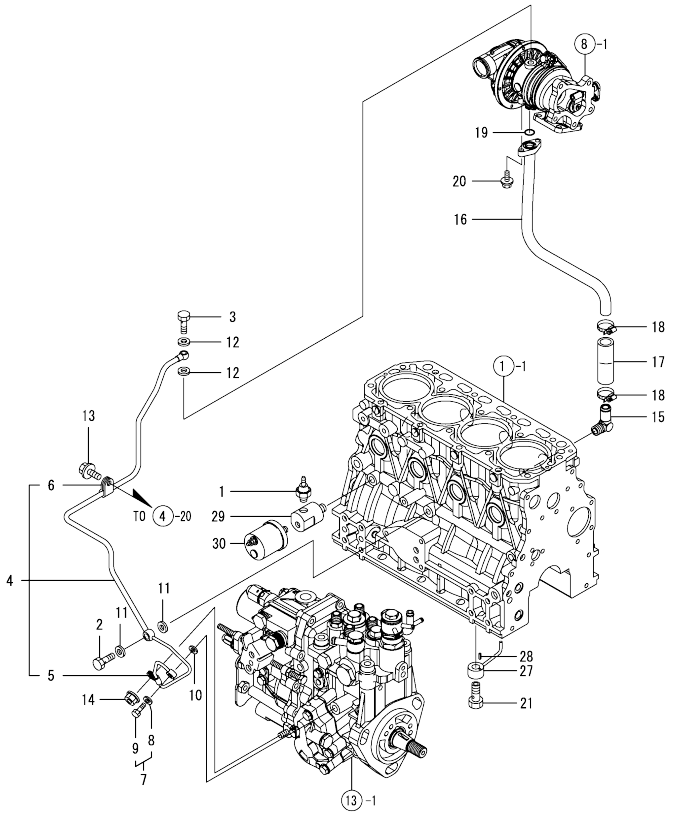

(A)=4TNV84T-GGEA (D)=
(B)= (E)=
(C)= (F)=

No.	Lev.	Parts No.	Description	Q'ty (A)	(B)	(C)	(D)	(E)	(F)	I	R
1	1	114250-39450	SWITCH, 0.5KG	1							
2	1	124160-39140	BOLT, PIPE JOINT M10	1							
3	1	121252-39150	BOLT, JOINT M10X1.5	1							
4	1	129508-39450	PIPE ASSY, OIL	1							
5	2	119802-39500	RETAINER, PIPE	1							
6	2	124223-39900	RETAINER	1							
7	1	129005-59830	BOLT ASSY, JOINT M8	1							
8	2	22190-080002	WASHER, SEAL 6	1							
9	2	23857-030000	BOLT, JOINT 3	1							
10	1	22190-080002	WASHER, SEAL 6	1							
11	1	22190-100002	WASHER, SEAL 10	2							
12	1	23414-100000	GASKET, 10X1.0	2							
13	1	26106-080122	BOLT, M8X 12 PLATED	1							
14	1	26366-060002	NUT, M6	1							
15	1	124070-13300	ELBOW, PT3/8	1							
16	1	129508-39600	PIPE, OIL	1							
17	1	123901-39820	HOSE	1							
18	1	23000-025000	CLAMP, 25	2							
19	1	24316-000160	O-RING, 4DP16.0	1							
20	1	26106-060162	BOLT, M6X 16 PLATED	2							
21	1	129792-39410	VALVE ASSY, CHECK	4							
27	1	129553-39650	NOZZLE	4							
28	1	22351-030010	PIN, SPRING 3.0X10	4							
29	1	171375-39601	DAMPER, 1/8	1							
30	1	119773-91501	SENSOR	1							

N:Old ←Yes/No→ New. Q:Old ←No/Yes→ New. R:Old ←Yes/Yes→ New. S:Old ←No/No→ New. W:Add. Z:Discontinued. F:Interchangeable by set. K:Q'ty Change

Copyright (C) YANMAR CO., LTD. All RightsReserved.

Fig.12. COOLING WATER SYSTEM

(A)=4TNV84T-GGEA
(B)=
(C)=
(D)=
(E)=
(F)=

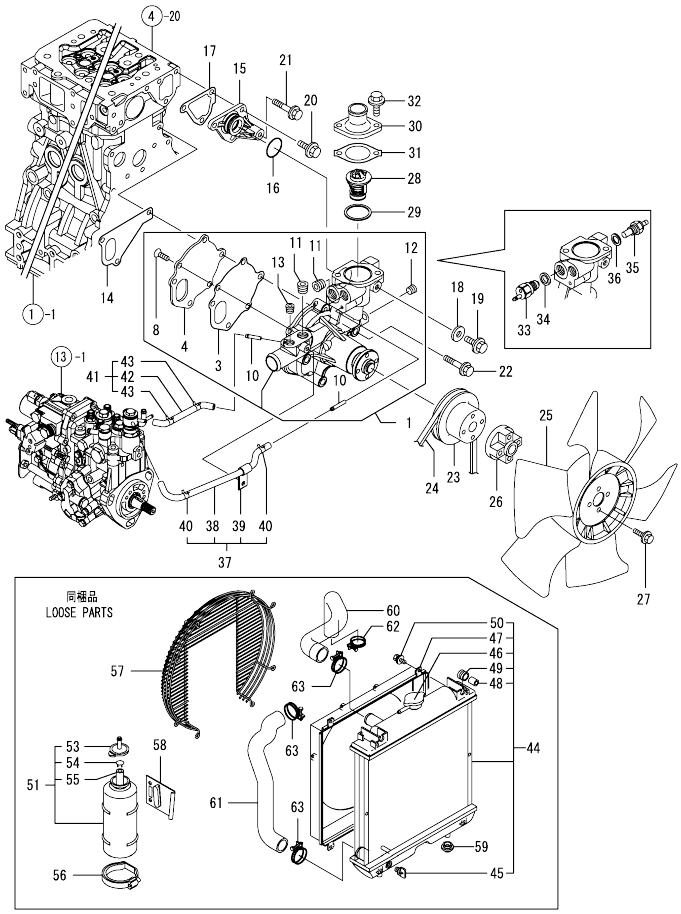

No.	Lev.	Parts No.	Description	Q'ty (A)	(B)	(C)	(D)	(E)	(F)	I	R
1	1	129508-42001	PUMP ASSY, WATER	1							
3	2	129100-42051	GASKET, WATER PUMP	1							
4	2	129100-42121	PLATE	1							
8	2	121850-42410	SCREW	3							
10	2	119802-49113	JOINT, PIPE	2							
11	2	129916-49740	PLUG, R03	2							
12	2	23876-010000	PLUG, R01	1							
13	2	23876-020000	PLUG, R02	1							
14	1	129486-42021	GASKET, WATER PUMP	1							
15	1	129004-42040	JOINT	1							
16	1	129486-42140	O-RING, G30	1							
17	1	124395-49840	GASKET	1							
18	1	23414-080000	GASKET, 8X1.0	1							
19	1	26106-080122	BOLT, M8X 12 PLATED	1							
20	1	26106-080162	BOLT, M8X 16 PLATED	3							
21	1	26106-080452	BOLT, M8X 45 PLATED	1							
22	1	26106-080602	BOLT, M8X 60 PLATED	3							
23	1	129155-42350	V-PULLEY	1							
24	1	119831-42290	V-BELT, A37.5	1							
25	1	129612-44700	FAN, COOLING	1							
26	1	121267-44760	SPACER	1							
27	1	26106-060302	BOLT, M6X 30 PLATED	4							
28	1	129155-49801	THERMOSTAT, 71	1							
29	1	129150-49811	GASKET, THERMOSTAT	1							
30	1	129350-49530	COVER, THERMOSTAT	1							
31	1	129795-49551	GASKET	1							
32	1	26106-080222	BOLT, M8X 22 PLATED	2							
33	1	121250-44901	SWITCH, 110	1							
34	1	124465-44950	GASKET, 16	1							
35	1	124250-49351	SENSOR	1							
36	1	129150-49360	GASKET	1							
37	1	129004-49610	PIPE ASSY, WATER	1							
38	2	129004-49711	PIPE ASSY, WATER	1							
39	2	119802-49730	RETAINER, PIPE	1							
40	2	124722-59050	CLIP, HOSE 9	2							
41	1	129004-49620	PIPE ASSY, WATER	1							
42	2	129004-49721	PIPE ASSY, WATER	1							
43	2	124722-59050	CLIP, HOSE 9	2							
44	1	129508-44501	RADIATOR ASSY	1							
45	2	129508-44550	COCK ASSY	1							
46	2	129107-44590	CAP, RADIATOR	1							
47	2	129601-44600	SHROUD	1							
48	2	118400-44670	COLLAR	2							
49	2	118400-44720	MOUNT, RUBBER	2							
50	2	26014-060122	BOLT, M6X 12	4							
51	1	124450-44510	TANK ASSY, SUB	1							
53	2	124450-44530	CAP	1							
54	2	124450-44560	RETAINER	1							
55	2	23061-070230	PIPE, 7X 230	1							
56	1	124450-44550	BAND	1							
57	1	129601-44560	GUARD	1							

N:Old ←Yes/No→ New. Q:Old ←No/Yes→ New. R:Old ←Yes/Yes→ New. S:Old ←No/No→ New. W:Add. Z:Discontinued. F:Interchangeable by set. K:Q'ty Change

++ CONTINUE ++

Copyright (C) YANMAR CO., LTD. All RightsReserved.

Fig.12. COOLING WATER SYSTEM

(A)=4TNV84T-GGEA (D)=
(B)= (E)=
(C)= (F)=

No.	Lev.	Parts No.	Description	Q'ty (A)	(B)	(C)	(D)	(E)	(F)	I	R
58	1	121256-44600	BRACKET, SUB TANK	1							
59	1	119255-44660	ABSORBER	2							
60	1	129602-49010	PIPE, WATER	1							
61	1	129508-49020	PIPE, WATER	1							
62	1	23010-038000	CLAMP, 38	1							
63	1	23010-044000	CLAMP, 44	3							

N:Old ←Yes/No→ New. Q:Old ←No/Yes→ New. R:Old ←Yes/Yes→ New. S:Old ←No/No→ New. W:Add. Z:Discontinued. F:Interchangeable by set. K:Q'ty Change

Copyright (C) YANMAR CO., LTD. All RightsReserved.

Fig.13. FUEL INJECTION PUMP

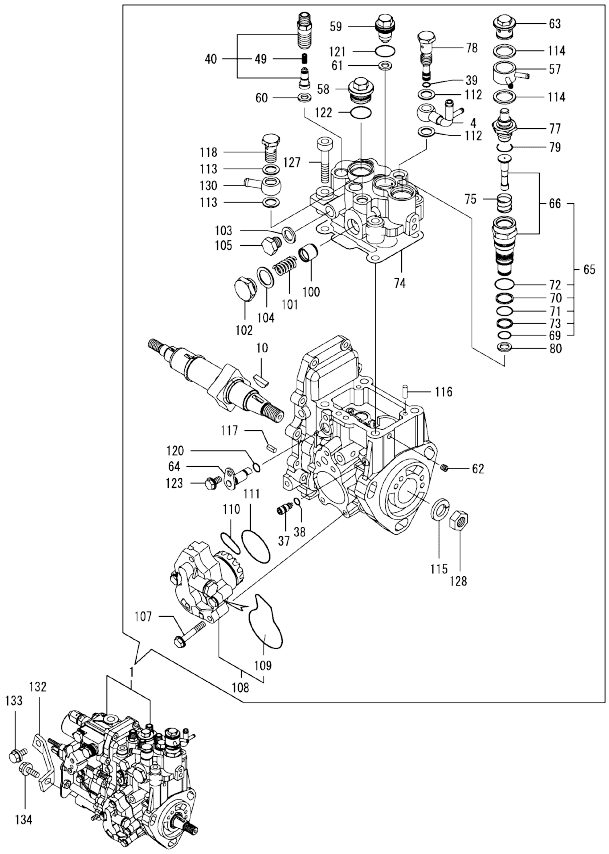

Remarks
(1) GOVERNOR ASSY(FIG.14) IS INCORPORATED IN THIS FUEL INJECTION PUMP(REF.NO.1).

(A)=4TNV84T-GGEA (D)=
(B)= (E)=
(C)= (F)=

No.	Lev.	Parts No.	Description	Q'ty (A)	(B)	(C)	(D)	(E)	(F)	I	R
1	1	729649-51390	PUMP ASSY, INJECTION	1							1
4	2	158552-51670	JOINT, OVER FLOW	1							
10	2	119802-51090	KEY, 4X16	1							
37	2	158600-51270	STOPPER, TAPPET	1							
38	2	158563-51281	O-RING, 4D S6	1							
39	2	158563-51281	O-RING, 4D S6	1							
40	2	129509-51390	VALVE ASSY, DELIVERY	4							
49	3	158563-51330	SPRING, DELIVERY	4							
57	2	158553-51551	JOINT	1							
58	2	158601-51550	PLUG	1							
59	2	119802-51560	PLUG, BARREL	1							
60	2	158552-51571	GASKET	4							
61	2	158552-51571	GASKET	1							
62	2	158557-51570	PLUG	1							
63	2	158601-51570	PLUG	1							
64	2	158552-51580	LIFTER	1							
65	2	119802-51590	TIMER SET	1							
66	3	119802-51600	TIMER ASSY	1							
69	3	158553-51670	O-RING, 1011	1							
70	3	119802-51680	RING, BACK UP	1							
71	3	119802-51690	O-RING	1							
72	3	24356-010200	O-RING, 4D1020	1							
73	3	24372-000150	RING, BACK UP T2P15	1							
74	2	158552-51600	GASKET	1							
75	2	158553-51630	SPRING, TIMER	1							
77	2	158553-51640	ELEMENT	1							
78	2	158601-51650	JOINT, OVER FLOW	1							
79	2	158553-51660	O-RING, P14	1							
80	2	158553-51680	GASKET	1							
100	2	158601-51770	PISTON	1							
101	2	158552-51781	SPRING	1							
102	2	158601-51790	PLUG	1							
103	2	22190-120002	WASHER, SEAL 12	1							
104	2	22190-180002	WASHER, SEAL 18	1							
105	2	23887-120002	PLUG, 12	1							
107	2	158553-51770	BOLT	4							
108	2	158552-52100	PUMP ASSY, FUEL FEED	1							
109	3	158552-52500	O-RING	1							
110	2	158552-52310	O-RING	1							
111	2	158552-52400	O-RING, 4E S42	1							
112	2	22190-120002	WASHER, SEAL 12	2							
113	2	22190-120002	WASHER, SEAL 12	2							
114	2	22190-180002	WASHER, SEAL 18	2							
115	2	22217-140000	WASHER, SPRING 14	1							
116	2	22312-050140	PIN, PARALLEL M5X14	2							
117	2	22351-050010	PIN, SPRING 5.0X10	2							
118	2	23857-060000	BOLT, JOINT 6	1							
120	2	24311-000070	O-RING, 1AP7.0	1							
121	2	24356-010180	O-RING, 4D1018	1							
122	2	24356-010200	O-RING, 4D1020	1							
123	2	26106-060102	BOLT, M6X 10 PLATED	1							

N:Old ←Yes/No→ New. Q:Old ←No/Yes→ New. R:Old ←Yes/Yes→ New. S:Old ←No/No→ New. W:Add. Z:Discontinued. F:Interchangeable by set. K:Q'ty Change

++ CONTINUE ++

Copyright (C) YANMAR CO., LTD. All RightsReserved.

Fig.13. FUEL INJECTION PUMP

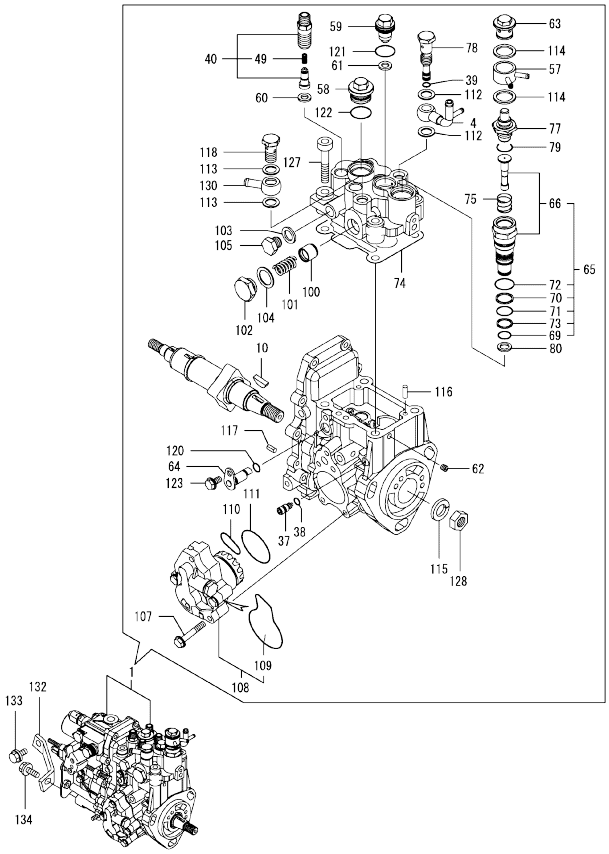

Remarks
(1) GOVERNOR ASSY(FIG.14) IS INCORPORATED IN THIS FUEL INJECTION PUMP(REF.NO.1).

(A)=4TNV84T-GGEA (D)=
(B)= (E)=
(C)= (F)=

No.	Lev.	Parts No.	Description	Q'ty (A)	(B)	(C)	(D)	(E)	(F)	I	R
127	2	26450-080452	BOLT, M8X 45	4							
128	2	26776-140002	NUT, LOCK M14	1							
130	2	129916-59020	JOINT, PIPE 12	1							
132	1	129601-51250	RETAINER, PUMP	1							
133	1	26106-080162	BOLT, M8X 16 PLATED	1							
134	1	26106-080202	BOLT, M8X 20 PLATED	1							

N:Old ←Yes/No→ New. Q:Old ←No/Yes→ New. R:Old ←Yes/Yes→ New. S:Old ←No/No→ New. W:Add. Z:Discontinued. F:Interchangeable by set. K:Q'ty Change

Copyright (C) YANMAR CO., LTD. All RightsReserved.

Fig.14. GOVERNOR

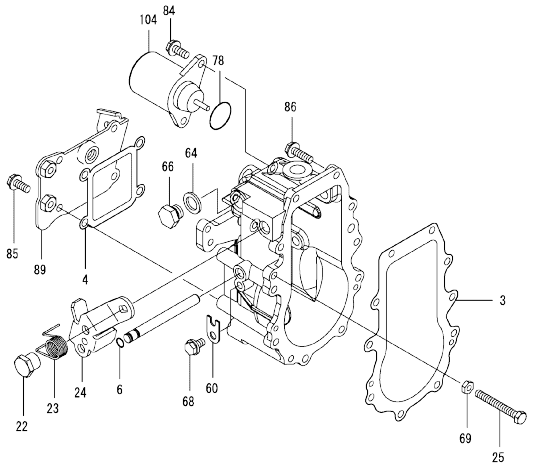

Remarks
* THIS FIGURE(GOVERNOR ASSY)IS INCORPORATED IN THE FUEL INJECTION PUMP ASSY(FIG.13).

(A)=4TNV84T-GGEA (D)=
(B)= (E)=
(C)= (F)=

No.	Lev.	Parts No.	Description	Q'ty (A)	(B)	(C)	(D)	(E)	(F)	I	R
3	2	158553-61050	GASKET	1							
4	2	158553-61070	GASKET	1							
6	2	129155-51280	O-RING, S6	1							
22	2	129255-61410	NUT, LOCK	1							
23	2	119807-61420	SPRING, RETURN	1							
24	2	129246-61441	LEVER, REGULATOR	1							
25	2	129155-61460	BOLT, IDLE	1							
60	2	119660-61901	RETAINER, SHAFT	1							
64	2	22190-120000	WASHER, SEAL 12	1							
66	2	23887-120002	PLUG, 12	1							
68	2	26106-060102	BOLT, M6X 10 PLATED	1							
69	2	26756-060002	NUT, LOCK M6	1							
78	2	158552-61900	O-RING	1							
84	2	26106-060142	BOLT, M6X 14 PLATED	2							
85	2	26106-060142	BOLT, M6X 14 PLATED	4							
86	2	26106-060202	BOLT, M6X 20 PLATED	10							
89	2	129246-61061	COVER, GOVERNOR CASE	1							
104	2	119653-77950	SOLENOID, STOP	1							

N:Old ◄Yes/No► New. Q:Old ◄No/Yes► New, R:Old ◄Yes/Yes► New, S:Old ◄No/No► New, W:Add, Z:Discontinued, F:Interchangeable by set, K:Q'ty Change

Copyright (C) YANMAR CO., LTD. All RightsReserved.

Fig.15. FUEL INJECTION VALVE

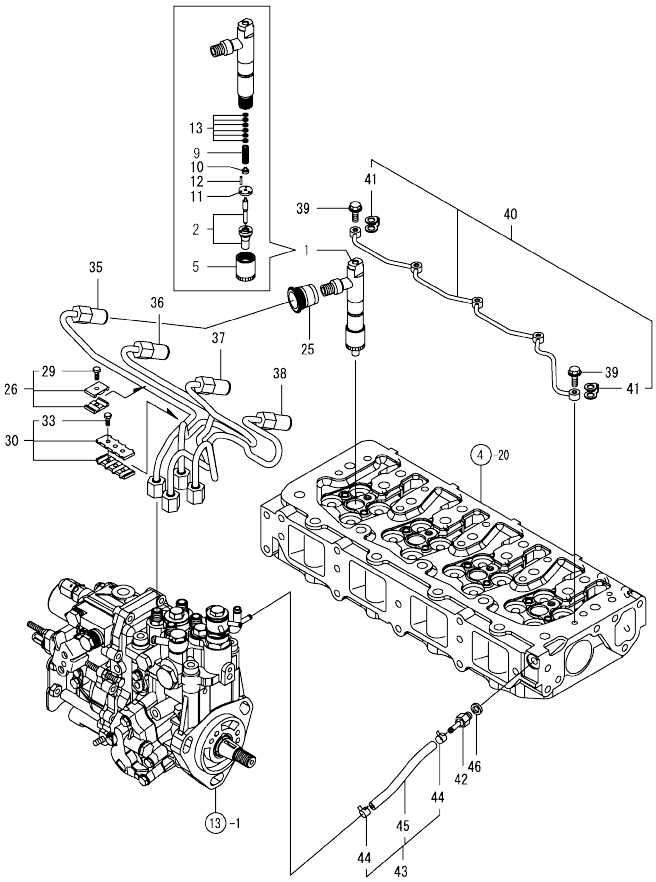

(A)=4TNV84T-GGEA (D)=
(B)= (E)=
(C)= (F)=

No.	Lev.	Parts No.	Description	Q'ty (A)	(B)	(C)	(D)	(E)	(F)	I	R
1	1	729649-53100	VALVE ASSY,INJECTION	4							
2	2	129649-53000	VALVE ASSY,INJECTION	4							
5	2	114250-53080	NUT, NOZZLE D16.95	4							
9	2	114250-53120	SPRING, NOZZLE	4							
10	2	114250-53130	SEAT, SPRING	4							
11	2	114250-53140	PLATE	4							
12	2	114250-53210	PIN	8							
13	2	114250-53400	SHIM SET	4							
25	1	123907-11601	SEAL	4							
26	1	119305-59120	RETAINER, PIPE	2							
29	2	129150-59131	BOLT, M4X14	2							
30	1	129550-59120	RETAINER, PIPE	1							
33	2	129150-59131	BOLT, M4X14	2							
35	1	129508-59910	PIPE ASSY, INJECTION	1							
36	1	129508-59920	PIPE ASSY, INJECTION	1							
37	1	129508-59930	PIPE ASSY, INJECTION	1							
38	1	129508-59940	PIPE ASSY, INJECTION	1							
39	1	123907-59540	BOLT, PIPE JOINT M6	5							
40	1	129508-59550	PIPE ASSY, RETURN	1							
41	2	123907-59550	GASKET	5							
42	1	123907-59560	JOINT	1							
43	1	129508-59570	PIPE ASSY, RETURN	1							
44	2	124722-59050	CLIP, HOSE 9	2							
45	2	129508-59510	PIPE, FUEL RETURN	1							
46	1	22190-080002	WASHER, SEAL 6	1							

N:Old ←Yes/No→ New. Q:Old ←No/Yes→ New, R:Old ←Yes/Yes→ New, S:Old ←No/No→ New, W:Add, Z:Discontinued. F:Interchangeable by set. K:Q'ty Change

Copyright (C) YANMAR CO., LTD. All RightsReserved.

Fig.16. FUEL LINE

(A)=4TNV84T-GGEA (D)=
(B)= (E)=
(C)= (F)=

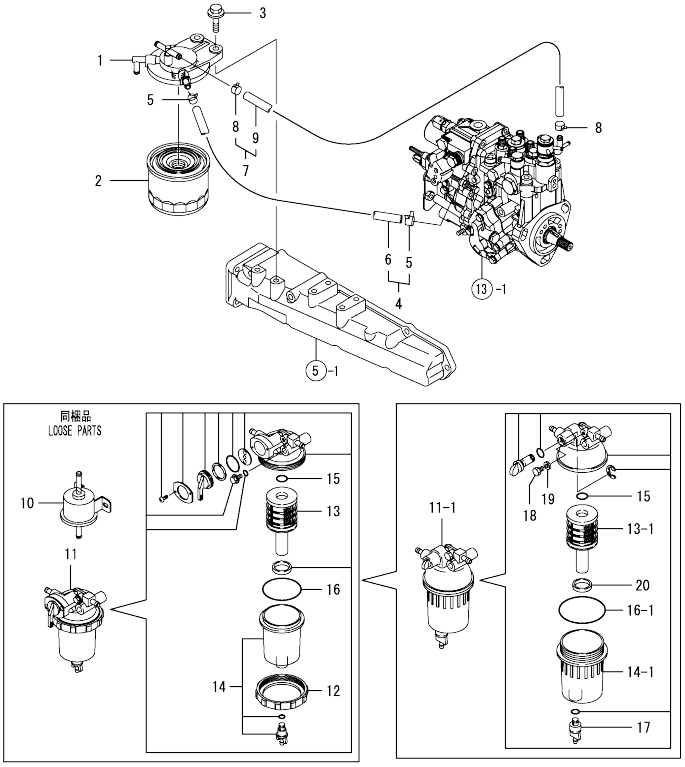

No.	Lev.	Parts No.	Description	Q'ty (A)	(B)	(C)	(D)	(E)	(F)	I	R
1	1	129004-55612	BRACKET, FILTER	1							
2	1	119802-55810	FILTER,FO	1							
3	1	26106-080302	BOLT, M8X 30 PLATED	2							
4	1	129210-59110	PIPE ASSY, FUEL	1							
5	2	124766-59050	CLIP, HOSE 12	2							
6	2	105025-59560	PIPE, FUEL	1							
7	1	129210-59160	PIPE ASSY, FUEL	1							
8	2	124766-59050	CLIP, HOSE 12	2							
9	2	129612-59520	PIPE, FUEL	1							
10	1	119225-52102	PUMP ASSY, FUEL FEED	1							
11	1	119802-55700	SEPARATOR ASSY	1							
11-1	1	129242-55700	SEPARATOR ASSY	1							N
	(A=*2008.08.)										
12	2	129100-55690	RING, RETAINING	1							Z
	(A=*2008.08.)										
13	2	119802-55710	ELEMENT	1							
13-1	2	129242-55730	ELEMENT	1							S
	(A=*2008.08.)										
14	2	119802-55730	CUP ASSY	1							
14-1	2	129242-55720	CUP	1							S
	(A=*2008.08.)										
15	2	24311-000160	O-RING, 1AP16.0	1							
16	2	24321-000650	O-RING, 1AG65.0	1							
16-1	2	24321-000750	O-RING, 1AG75.0	1							S
	(A=*2008.08.)										
17	2	129242-55740	PLUG, DRAIN	1							W
	(A=*2008.08.)										
18	2	129242-55750	VALVE, AIR VENT	1							W
	(A=*2008.08.)										
19	2	129242-55760	GASKET	1							W
	(A=*2008.08.)										
20	2	129242-55770	FLOAT	1							W
	(A=*2008.08.)										

N:Old ←Yes/No→ New. Q:Old ←No/Yes→ New. R:Old ←Yes/Yes→ New. S:Old ←No/No→ New. W:Add. Z:Discontinued. F:Interchangeable by set. K:Q'ty Change

Copyright (C) YANMAR CO., LTD. All RightsReserved.

Fig.17. STARTING MOTOR

(A)=4TNV84T-GGEA
(B)=
(C)=
(D)=
(E)=
(F)=

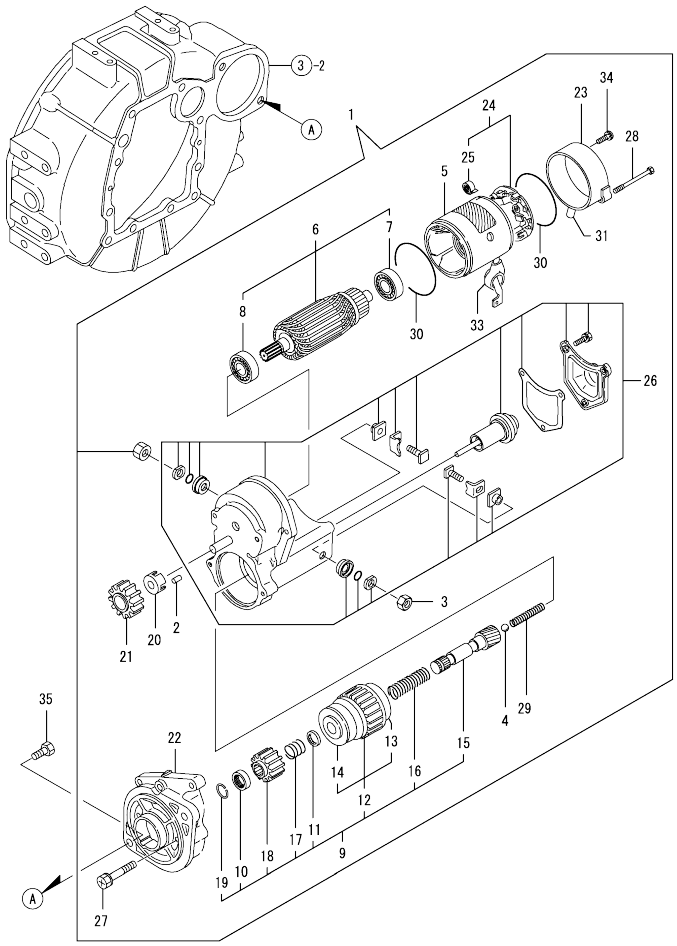

No.	Lev.	Parts No.	Description	Q'ty (A)	(B)	(C)	(D)	(E)	(F)	I	R
1	1	129407-77010	STARTER, RA1.4	1							
2	2	X0283060061	ROLLER	5							
3	2	X9490561370	NUT	1							
4	2	X9491200240	BALL	1							
5	2	129407-77210	YOKE ASSY	1							
6	2	129407-77220	ARMATURE ASSY	1							
7	3	129129-77230	BEARING	1							
8	3	129129-77240	BEARING	1							
9	2	129407-77250	STARTER	1							
10	3	X0280210230	NUT	1							
11	3	X0283270140	RETAINER	1							
12	3	129407-77390	CLUTCH ASSY	1							
13	4	129129-77440	BEARING, BALL	1							
14	4	129129-77450	BEARING, BALL	1							
15	3	129129-77400	SHAFT	1							
16	3	129129-77410	SPRING, COIL	1							
17	3	X9491703371	SPRING, COIL	1							
18	3	129129-77420	PINION, STARTER	1							
19	3	129129-77430	RING	1							
20	2	129129-77260	RETAINER	1							
21	2	129129-77270	PINION	1							
22	2	129407-77280	HOUSING	1							
23	2	129407-77290	FRAME	1							
24	2	129407-77300	HOLDER ASSY	1							
25	3	X9491730461	SPRING	4							
26	2	129407-77310	SWITCH ASSY	1							
27	2	129129-77320	BOLT	2							
28	2	129407-77330	BOLT	2							
29	2	129129-77340	SPRING	1							
30	2	129129-77350	O-RING	2							
31	2	129129-77362	COVER	1							
33	2	129129-77380	CAP	1							
34	2	129129-77460	SCREW	2							
35	1	26116-120252	BOLT, M12X 25 PLATED	2							

N:Old ←Yes/No→ New. Q:Old ←No/Yes→ New. R:Old ←Yes/Yes→ New. S:Old ←No/No→ New. W:Add. Z:Discontinued. F:Interchangeable by set. K:Q'ty Change

Copyright (C) YANMAR CO., LTD. All RightsReserved.

Fig.18. GENERATOR

(A)=4TNV84T-GGEA
(B)=
(C)=
(D)=
(E)=
(F)=

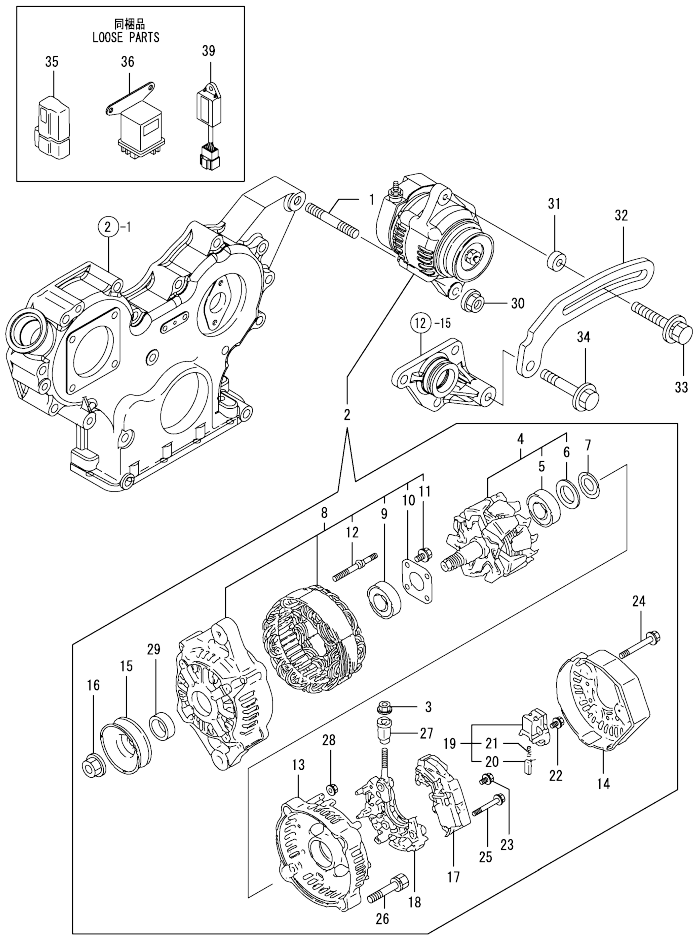

No.	Lev.	Parts No.	Description	Q'ty (A)	(B)	(C)	(D)	(E)	(F)	I	R
1	1	129795-01900	STUD	1							
2	1	129423-77200	GENERATOR, 12V-40A	1							
3	2	X9490561001	NUT	1							
4	2	119620-77380	ROTOR ASSY	1							
5	3	119620-79240	BEARING, BALL	1							
6	3	119620-79250	COVER	1							
7	2	119620-79360	WASHER, THRUST	1							
8	2	119620-77421	FRAME ASSY, DRIVE	1							
9	3	119620-79200	BEARING, BALL	1							
10	3	119620-79210	PLATE, RETAINER	1							
11	3	119620-79220	SCREW	4							
12	3	119620-79230	STUD	2							
13	2	119620-77440	FRAME ASSY	1							
14	2	129240-79300	COVER	1							
15	2	119620-77461	PULLEY	1							
16	2	119620-77471	NUT	1							
17	2	129423-77710	REGULATOR ASSY	1							
18	2	119620-79260	HOLDER	1							
19	2	119620-79270	HOLDER, BRUSH	1							
20	3	119620-77480	BRUSH ASSY	2							
21	3	119620-79280	SPRING	2							
22	2	119620-79290	SCREW	1							
23	2	119620-79300	SCREW	1							
24	2	119620-79310	BOLT	3							
25	2	119620-79320	SCREW	2							
26	2	119620-79330	BOLT	2							
27	2	119620-79340	BUSH, INSULATION	1							
28	2	119620-79350	NUT	2							
29	2	119620-77490	COLLAR	1							
30	1	26306-100002	NUT, M10	1							
31	1	119940-77270	SPACER, GENERATOR	1							
32	1	119940-77330	ADJUSTER	1							
33	1	129972-77341	BOLT, ADJUSTER L=50	1							
34	1	26106-080452	BOLT, M8X 45 PLATED	1							
35	1	119643-66900	DIODE	1							
36	1	119650-77910	RELAY ASSY, GLOW	1							
39	1	129211-77920	TIMER	1							

N:Old ←Yes/No→ New. Q:Old ←No/Yes→ New. R:Old ←Yes/Yes→ New. S:Old ←No/No→ New. W:Add. Z:Discontinued. F:Interchangeable by set. K:Q'ty Change

Copyright (C) YANMAR CO., LTD. All RightsReserved.

Fig.19. GASKET SET

(A)=4TNV84T-GGEA
(B)=
(C)=
(D)=
(E)=
(F)=

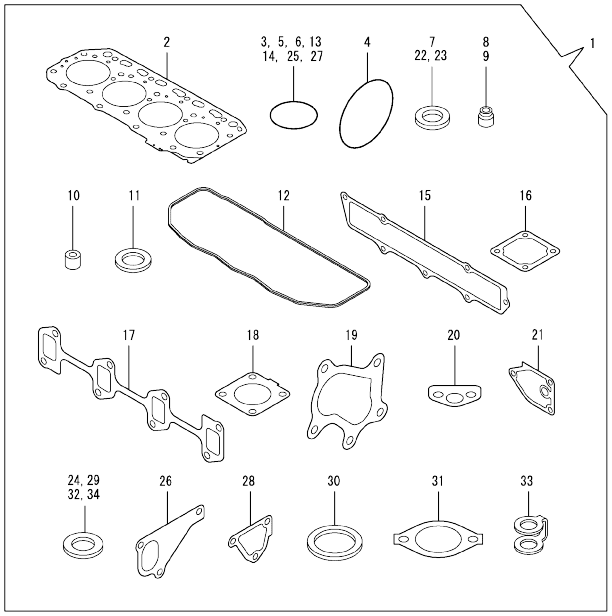

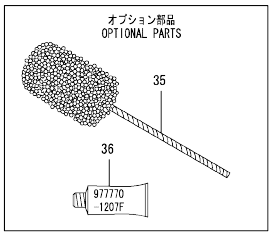

No.	Lev.	Parts No.	Description	Q'ty (A)	(B)	(C)	(D)	(E)	(F)	I	R
1	1	729508-92810	GASKET SET	1							1
2	2	129508-01330	GASKET, HEAD	1							
3	2	119609-32040	O-RING, P16	4							
4	2	121850-51960	O-RING	1							
5	2	24311-000320	O-RING, 1AP32.0	2							
6	2	24341-000240	O-RING, 1AS24.0	1							
7	2	22190-220002	WASHER, SEAL 22	1							
8	2	119717-11340	SEAL, VALVE STEM	8							
9	2	119717-11350	SEAL, VALVE STEM	8							
10	2	119802-11870	PROTECTOR, NOZZLE	4							
11	2	119625-11880	SEAT, NOZZLE	4							
12	2	129508-11310	GASKET, BONNET	1							
13	2	24341-000400	O-RING, 1AS40.0	1							
14	2	24311-000120	O-RING, 1AP12.0	7							
15	2	129508-12110	GASKET, MANIFOLD	1							
16	2	129150-77511	GASKET	1							
17	2	129550-13110	GASKET	1							
18	2	129508-18080	GASKET	1							
19	2	129508-18090	GASKET	1							
20	2	129150-35042	GASKET	1							
21	2	129150-35111	GASKET	1							
22	2	22190-080002	WASHER, SEAL 6	3							
23	2	22190-100002	WASHER, SEAL 10	2							
24	2	23414-100000	GASKET, 10X1.0	2							
25	2	24316-000160	O-RING, 4DP16.0	1							
26	2	129486-42021	GASKET, WATER PUMP	1							
27	2	129486-42140	O-RING, G30	1							
28	2	124395-49840	GASKET	1							
29	2	23414-080000	GASKET, 8X1.0	1							
30	2	129150-49811	GASKET, THERMOSTAT	1							
31	2	129795-49551	GASKET	1							
32	2	124465-44950	GASKET, 16	1							
33	2	123907-59550	GASKET	5							
34	2	129150-49360	GASKET	1							
35	1	129400-92420	HONE	1							1
36	1	977770-1207F	GASKET.LIQUID	1							1

Remarks
(1) OPTIONAL PART.

N:Old ←Yes/No→ New. Q:Old ←No/Yes→ New. R:Old ←Yes/Yes→ New. S:Old ←No/No→ New. W:Add. Z:Discontinued. F:Interchangeable by set. K:Q'ty Change

Copyright (C) YANMAR CO., LTD. All RightsReserved.

Parts No. Index

Parts No.	Fig. No.	Ref. No.
105025-59560	16	6
114250-39450	11	1
114250-53080	15	5
114250-53120	15	9
114250-53130	15	10
114250-53140	15	11
114250-53210	15	12
114250-53400	15	13
118400-44670	12	48
118400-44720	12	49
119005-12571	5	10
119005-35170	10	14
119131-18320	6	5
119225-52102	16	10
119255-44660	12	59
119305-59120	15	26
119609-32040	2	11
	19	3
119620-01750	3	3
119620-77380	18	4
119620-77421	18	8
119620-77440	18	13
119620-77461	18	15
119620-77471	18	16
119620-77480	18	20
119620-77490	18	29
119620-79200	18	9
119620-79210	18	10
119620-79220	18	11
119620-79230	18	12
119620-79240	18	5
119620-79250	18	6
119620-79260	18	18
119620-79270	18	19
119620-79280	18	21
119620-79290	18	22
119620-79300	18	23
119620-79310	18	24
119620-79320	18	25
119620-79330	18	26
119620-79340	18	27
119620-79350	18	28
119620-79360	18	7
119625-11880	4	42
	19	11
119640-01640	3	8
119643-66900	18	35
119650-77910	18	36
119653-77950	14	104
119660-61901	14	60

Parts No.	Fig. No.	Ref. No.
119717-11190	4	32
119717-11340	4	33
	19	8
119717-11350	4	34
	19	9
119717-11800	4	40
119773-91501	11	30
119802-01520	2	6
119802-01561	2	7
119802-03070	4	52
119802-11870	4	41
	19	10
119802-13650	6	3
119802-13670	6	4
119802-13820	6	6 -1
119802-21202	9	4
119802-21660	9	8
119802-25051	7	9
119802-25071	7	13
119802-25101	7	10
119802-25901	7	16
119802-32070	2	13
119802-32100	2	12
119802-32130	2	19
119802-35110	10	11
119802-39500	11	5
119802-49113	12	10
119802-49730	12	39
119802-51090	13	10
119802-51560	13	59
119802-51590	13	65
119802-51600	13	66
119802-51680	13	70
119802-51690	13	71
119802-55700	16	11
119802-55710	16	13
119802-55730	16	14
119802-55810	16	2
119807-61420	14	23
119808-12540	5	13
119831-42290	12	24
119934-01800	2	5
119940-59130	10	23
119940-77270	18	31
119940-77330	18	32
121023-01551	2	27
121111-21501	9	11
121250-44901	12	33
121252-39150	11	3
121256-44600	12	58

Parts No.	Fig. No.	Ref. No.
121267-44760	12	26
121520-34810	10	3
121550-23200	9	26
121850-21680	9	10
121850-42410	12	8
121850-51960	2	20
	19	4
123901-39820	11	17
123907-11550	4	19
123907-11601	15	25
123907-11830	4	38
123907-59540	15	39
123907-59550	15	41
	19	33
123907-59560	15	42
124060-01050	1	11
124070-13300	11	15
124160-01751	2	8
	4	49
124160-01910	1	12
		13
124160-11360	4	59
124160-39140	11	2
124223-39900	11	6
124240-01871	2	9
124250-49351	12	35
124395-49840	12	17
	19	28
124450-44510	12	51
124450-44530	12	53
124450-44550	12	56
124450-44560	12	54
124465-44950	12	34
	19	32
124550-21600	9	14
124722-59050	12	40
		43
	15	44
124766-59050	16	5
		8
126650-12680	5	14
129001-01250	1	4
129001-02931	1	30
129001-32330	2	16
129001-91841	2	21
129004-01190	1	27
129004-22500	9	17
129004-22950	9	34
129004-34802	10	2
129004-42040	12	15

Parts No.	Fig. No.	Ref. No.
129004-49610	12	37
129004-49620	12	41
129004-49711	12	38
129004-49721	12	42
129004-55612	16	1
129005-59830	11	7
129006-03120	4	54
129006-35100	10	10
129006-44480	10	15
129062-12560	5	11
129100-01580	3	1
		14
	9	2
129100-01640	3	15
129100-23910	9	29
129100-42051	12	3
129100-42121	12	4
129100-55690	16	12
129103-49301	10	25
129107-44590	12	46
129120-77502	5	20
129129-77230	17	7
129129-77240	17	8
129129-77260	17	20
129129-77270	17	21
129129-77320	17	27
129129-77340	17	29
129129-77350	17	30
129129-77362	17	31
129129-77380	17	33
129129-77400	17	15
129129-77410	17	16
129129-77420	17	18
129129-77430	17	19
129129-77440	17	13
129129-77450	17	14
129129-77460	17	34
129150-01200	1	28
129150-02020	1	6
129150-02450	7	4
129150-02871	1	33
129150-02931	1	24
129150-02941	1	36
129150-03070	4	53
129150-03090	4	62
129150-11230	4	10
		14
129150-11750	4	12
		16
		37

Parts No. Index

Parts No.	Fig. No.	Ref. No.
129150-14101	7	6
129150-14200	7	1
129150-14400	7	2
129150-23601	9	27
129150-23611	9	30
129150-25301	7	15
129150-35042	10	4
	19	20
129150-35111	10	13
	19	21
129150-49360	12	36
	19	34
129150-49811	12	29
	19	30
129150-59131	15	29
		33
129150-77511	5	21
	19	16
129155-42350	12	23
129155-49801	12	28
129155-51280	14	6
129155-61460	14	25
129202-22300	9	21
129210-59110	16	4
129210-59160	16	7
129211-77920	18	39
129240-79300	18	14
129242-55700	16	11 -1
129242-55720	16	14 -1
129242-55730	16	13 -1
129242-55740	16	17
129242-55750	16	18
129242-55760	16	19
129242-55770	16	20
129246-61061	14	89
129246-61441	14	24
129255-61410	14	22
129350-49530	12	30
129400-01730	3	6
129400-01770	3	7
129400-92420	19	35
129403-13120	6	2
129407-77010	17	1
129407-77210	17	5
129407-77220	17	6
129407-77250	17	9
129407-77280	17	22
129407-77290	17	23
129407-77300	17	24
129407-77310	17	26

Parts No.	Fig. No.	Ref. No.
129407-77330	17	28
129407-77390	17	12
129417-33110	10	9
129417-35150	10	12
129418-18320	8	3
129418-32320	2	15
129423-77200	18	2
129423-77710	18	17
129436-35070	10	5 -1
129436-35091	10	5
129486-01670	3	18
129486-42021	12	14
	19	26
129486-42140	12	16
	19	27
129508-01330	1	29
	19	2
129508-03010	4	51
129508-11100	4	28
129508-11110	4	29
129508-11130	4	30
129508-11180	4	31
129508-11241	4	3
129508-11250	4	4
129508-11260	4	6
129508-11270	4	7
129508-11280	4	8
129508-11310	4	56
	19	12
129508-11350	4	50
129508-11650	4	9
129508-11660	4	13
129508-11700	4	20
129508-11820	4	39
129508-11900	4	43
129508-11920	4	17
129508-12060	5	1
129508-12080	5	8
129508-12100	5	2
129508-12110	5	3
	19	15
129508-12560	5	15
129508-14580	7	3
129508-18020	8	1
129508-18080	8	2
	19	18
129508-18090	8	5
	19	19
129508-21002	9	1
129508-22080	9	15

Parts No.	Fig. No.	Ref. No.
129508-22900	9	32
129508-32111	2	17
129508-32120	2	18
129508-33010	10	7
129508-33050	10	8
129508-39450	11	4
129508-39600	11	16
129508-42001	12	1
129508-44501	12	44
129508-44550	12	45
129508-49020	12	61
129508-49030	10	16
129508-49040	10	20
129508-59510	15	45
129508-59550	15	40
129508-59570	15	43
129508-59910	15	35
129508-59920	15	36
129508-59930	15	37
129508-59940	15	38
129509-51390	13	40
129550-13110	6	1
	19	17
129550-59120	15	30
129553-39650	11	27
129601-44560	12	57
129601-44600	12	47
129601-51250	13	132
129602-49010	12	60
129612-44700	12	25
129612-59520	16	9
129649-53000	15	2
129672-11510	4	35
129688-01780	3	7 -1
129693-44310	6	6
129792-39410	11	21
129795-01780	3	17
129795-01900	18	1
129795-01950	2	10
129795-02412	1	9
129795-21661	9	9
129795-49551	12	31
	19	31
129900-07900	4	1
129900-12530	5	12
129900-32130	2	14
129907-11950	4	44
129916-49740	12	11
129916-59020	13	130
129946-12510	5	9

Parts No.	Fig. No.	Ref. No.
129972-77341	18	33
158552-51151	7	17
158552-51571	13	60
		61
158552-51580	13	64
158552-51600	13	74
158552-51670	13	4
158552-51781	13	101
158552-52100	13	108
158552-52310	13	110
158552-52400	13	111
158552-52500	13	109
158552-61900	14	78
158553-51551	13	57
158553-51630	13	75
158553-51640	13	77
158553-51660	13	79
158553-51670	13	69
158553-51680	13	80
158553-51770	13	107
158553-61050	14	3
158553-61070	14	4
158557-51570	13	62
158563-51281	13	38
		39
158563-51330	13	49
158600-51270	13	37
158601-51550	13	58
158601-51570	13	63
158601-51650	13	78
158601-51770	13	100
158601-51790	13	102
171008-03990	10	17
		21
171051-01921	1	5
171056-49120	10	1
171375-39601	11	29
171420-01600	3	2
171420-21590	9	12
22190-080002	11	8
		10
	15	46
	19	22
22190-100002	11	11
	19	23
22190-120000	14	64
22190-120002	13	103
		112
		113
22190-180002	13	104

Parts No. Index

Parts No.	Fig. No.	Ref. No.
22190-180002	13	114
22190-220002	3	10
	19	7
22217-140000	7	18
	13	115
22252-000260	9	22
22312-050140	13	116
22351-030010	9	7
	11	28
22351-050010	13	117
22351-060012	4	45
22512-070140	7	7
	9	5
22857-500100	4	57
23000-025000	11	18
23000-048000	5	4
23000-060000	5	5
		16
23000-080000	5	17
23010-038000	12	62
23010-044000	12	63
23061-070230	12	55
23080-015000	10	19
		24
23414-080000	12	18
	19	29
23414-100000	11	12
	19	24
23857-030000	11	9
23857-060000	13	118
23876-010000	12	12
23876-020000	4	26
	12	13
23876-030000	2	3
23876-040000	2	4
23887-120002	13	105
	14	66
24311-000070	13	120
24311-000120	4	46
		60
	19	14
24311-000160	16	15
24311-000320	2	22
	4	61
	19	5
24316-000160	11	19
	19	25
24321-000650	16	16
24321-000750	16	16 -1
24341-000240	2	28

Parts No.	Fig. No.	Ref. No.
24341-000240	19	6
24341-000400	4	58
	19	13
24356-010180	13	121
24356-010200	13	72
		122
24372-000150	13	73
26013-080222	5	18
		19
26014-060122	12	50
26106-060102	13	123
	14	68
26106-060142	14	84
		85
26106-060162	2	29
	11	20
26106-060202	14	86
26106-060302	12	27
26106-080122	11	13
	12	19
26106-080142	7	8
26106-080162	2	23
		24
	3	11
	4	2
	12	20
	13	133
26106-080202	5	6
	10	26
	13	134
26106-080222	12	32
26106-080252	3	12
	4	47
26106-080302	16	3
26106-080352	3	19
	5	22
	10	6
26106-080402	7	14
26106-080452	3	13
		13 -1
	12	21
	18	34
26106-080502	3	20
	4	48
26106-080552	2	25
	10	6 -1
26106-080602	12	22
26106-080802	5	7
26116-120252	17	35
26206-100252	3	4

Parts No.	Fig. No.	Ref. No.
26206-100302	3	5
26226-080352	4	18
26306-080002	2	26
	8	4
26306-100002	18	30
26366-060002	11	14
26450-080452	13	127
26756-060002	14	69
26776-140002	7	19
	13	128
27241-120000	1	14
27241-300000	1	10
27241-400000	4	27
729402-23100	9	23
729508-01560	1	1
729508-92810	19	1
729533-01500	2	1
729649-51390	13	1
729649-53100	15	1
977770-1207F	19	36
X0280210230	17	10
X0283060061	17	2
X0283270140	17	11
X9490561001	18	3
X9490561370	17	3
X9491200240	17	4
X9491703371	17	17
X9491730461	17	25

Parts No.	Fig. No.	Ref. No.