YANMAR

PARTS CATALOG

0CW10-M15300EN

Last update Mar., 2016

PREFACE

1. This parts catalog is the 1st edition of 4TNV84T-GGEH for Himoinsa Ltd.

Pub.No. : 000Y00W1530

Published : December,2006

Directions for the Parts Catalog.

1.The parts stipulated in this Parts Catalog are not necessarily standard equipped parts.
2.Parts may change without prior notice.
3.The following is an example of the Parts Catalog format.

0CF10-G21601 29. FUEL INJECTION PUMP(W/BOOST)

(A)=4JH-DT
(B)=4JH-DTZ
(C)=4JH-DTZP
(D)=4JH-DTZA
(E)=4JH-DTZY
(F)=

① REF.	② LEV.	PARTS NO.	DESCRIPTION	Q'TY (A)	(B)	(C)	(D)	(E)	(F)	③ I	⑤ R
1	1	729595-51390	FUEL INJECTION PUMP	1	1	1	1	1			1
1-1	1	729595-51391	FUEL INJECTION PUMP	1	1	1	1	1		N	1
	(A=E00185)	(B=E00200)									
3	2	26022-060162	SCREW M 6X 16	9	9	9	9	9			
3-1 ④	2	26022-060162	SCREW M 6X 16	4	4	4	4	4		K	
	(A=E00156)	(B=E00156)	(C=E00156) (D=E00156)	(E=E00156)							
4	2	129470-51040	CAMSHAFT	1	1	1	1	1			
5	2	122710-51050	BEARING, ROLLER	2	2	2	2	2			
6	2	129470-51060	RETAINER	1	1	1	1	1			

Remarks
(1) BOOST COMPEMSATOR TYPE. OPTIONAL
PART, TO E00155,(4JH-DT, 4JH-DTZ

① Ref. No.

The Ref. No. listed may not be in accordance with the illustration Ref. No.

(Ex.) Illustration No. 1 List Ref No. 1 (Before change) → 1- 1 (After change)

For interchangeable symbols N, R and K, illustrations for new parts may be abbreviated.

② Lev. (Level)

Level indication
The numbers below indicate the level of relativity towards the main part.
1 ----- Main parts (Assembly parts)
2 ----- Sub component included in " 1 ".
3 ----- Sub component included in " 2 ".
Note) Parts that are not for sale are partially illustrated but not listed.

③ Interchangeability Mark

When a part change takes place, one of the following interchangeability symbols is indicated beside the part.

Symbol	Interchangeability	Contents note
N	Old ← Yes / No → New	New Part is interchangeable for Old Part but Old Part is not interchangeable for New Part.
Q	Old ← No / Yes → New	New Part is not interchangeable for Old Part but Old Part is interchangeable for New Part.
R	Old ← Yes / Yes → New	New/ Old Parts are both interchangeable.
S	Old ← No / No → New	New/ Old Parts are both not interchangeable.
W		Part newly added.
Z		Part discontinued.
F		Not interchangeable by a single part but interchangeable together with related parts.
K		Changes only for used parts quantities.

④ Effective Machine No.

When a part changes, the effective Machine No. will be indicated in the (A)-(F) column.

Product Symbol	Product No.	Product Symbol	Product No.
C	Clutch No. Compressor No.	F	Machine No. (Agricultural Equip.)
D	Drive No.	M	Machine No.
E	Engine No.		

Note 1) A date may follow the symbol. (Ex.) 1996.01
Note 2) " XXXXX " and " ZZZZZ " are for parts that could not be predicted or for engine models that could not be identified.
Note 3) (A=E00185) is the E (Engine Serial Number) for the column (A) model (in this case 4JH-DT) after the parts design change.

⑤ Remarks Mark

Figures or alphabets (symbols) are entered in the remarks column.
The comments (remarks) on parts that are indicated at the bottom of the illustration are the same symbols as those stated above.

Contents

0CW10-M15300

Fig. No.	Fig. Name	Fig. No.	Fig. Name

4TNV84T-GGEH

1. CYLINDER BLOCK
2. GEAR HOUSING
3. FLYWHEEL HOUSING & OIL SUMP
4. CYLINDER HEAD & BONNET
5. SUCTION MANIFOLD & AIR CLEANER
6. EXHAUST MANIFOLD
7. CAMSHAFT & DRIVING GEAR
8. TURBINE
9. CRANKSHAFT & PISTON
10. LUB.OIL SYSTEM
11. LUB.OIL LINE
12. COOLING WATER SYSTEM
13. FUEL INJECTION PUMP
14. GOVERNOR
15. FUEL INJECTION VALVE
16. FUEL LINE
17. STARTING MOTOR
18. GENERATOR
19. GASKET SET

Fig.1. CYLINDER BLOCK

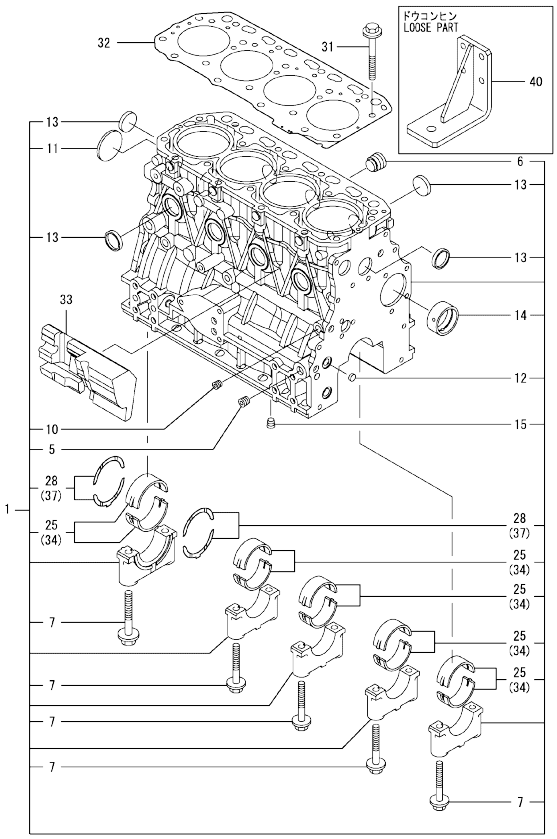

Remarks
(1) UNDER-SIZE(U.S=0.25)PART.
(2) OVER-SIZE(O.S=0.25)PART.
(3) REPAIR PART.

(A)=4TNV84T-GGEH (D)=
(B)= (E)=
(C)= (F)=

No.	Lev.	Parts No.	Description	Q'ty (A)	(B)	(C)	(D)	(E)	(F)	I	R
1	1	729508-01560	BLOCK ASSY, CYLINDER	1							
5	2	124160-01910	PLUG, PT1/4	2							
6	2	171051-01921	PLUG, NPTF1	1							
7	2	129150-02020	BOLT, METAL CAP	10							
10	2	124060-01050	PLUG, PT1/8	1							
11	2	129001-01250	PLUG, 50	1							
12	2	27241-120000	PLUG, 12	2							
13	2	27241-300000	PLUG 30	8							
14	2	129795-02412	BUSH, CAMSHAFT	1							
15	2	124160-01910	PLUG, PT1/4	1							
25	2	129001-02931	BEARING, MAIN	5							3
28	2	129150-02931	BEARING, THRUST	2							
31	1	129150-01200	BOLT, HEAD	18							
32	1	129508-01330	GASKET, HEAD	1							
33	1	129004-01190	SPACER	1							
34	1	129150-02871	BEARING, 0.25 US	5							1
37	1	129150-02941	BEARING, THRUST 0.25	1							2
40	1	129188-08100	FOOT	2							

N:Old ←Yes/No→ New. Q:Old ←No/Yes→ New. R:Old ←Yes/Yes→ New. S:Old ←No/No→ New. W:Add. Z:Discontinued. F:Interchangeable by set. K:Q'ty Change

Copyright (C) YANMAR CO., LTD. All RightsReserved.

Fig.2. GEAR HOUSING

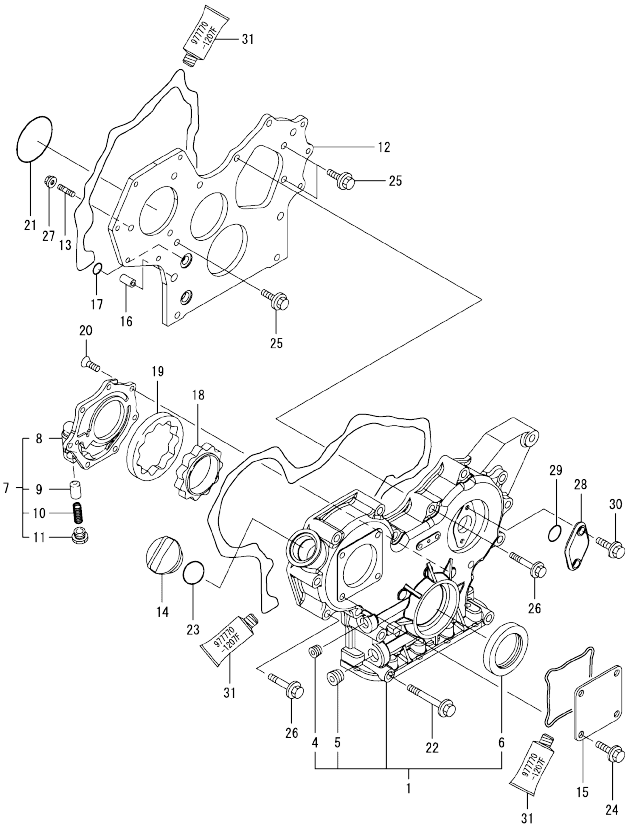

Remarks
(1) OPTIONAL PART.

(A)=4TNV84T-GGEH (D)=
(B)= (E)=
(C)= (F)=

No.	Lev.	Parts No.	Description	Q'ty (A)	(B)	(C)	(D)	(E)	(F)	I	R
1	1	729508-01500	CASE ASSY, GEAR	1							
4	2	23876-030000	PLUG, R03	1							
5	2	23876-040000	PLUG, R04	1							
6	2	129795-01800	SEAL, OIL	1							
7	1	119802-32100	COVER ASSY	1							
8	2	119802-32070	COVER	1							
9	2	129900-32130	VALVE, RELIEF	1							
10	2	129418-32320	SPRING	1							
11	2	129001-32330	PLUG	1							
12	1	119802-01520	FLANGE, GEAR CASE	1							
13	1	119802-01561	STUD, M8X25	3							
14	1	124160-01751	COVER, FILLER	1							
15	1	124240-01871	COVER	1							
16	1	129795-01950	PIPE, KNOCK L=18	2							
17	1	119609-32040	O-RING, P16	4							
18	1	129508-32111	ROTOR, INNER	1							
19	1	129508-32120	ROTOR, OUTER	1							
20	1	119802-32130	SCREW, M6X16	7							
21	1	121850-51960	O-RING	1							
22	1	129001-91841	BOLT, M8X85	3							
23	1	24311-000320	O-RING, 1AP32.0	1							
24	1	26106-080162	BOLT, M8X 16 PLATED	4							
25	1	26106-080162	BOLT, M8X 16 PLATED	3							
26	1	26106-080552	BOLT, M8X 55 PLATED	12							
27	1	26306-080002	NUT, M8	3							
28	1	121023-01551	COVER	1							
29	1	24341-000240	O-RING, 1AS24.0	1							
30	1	26106-060162	BOLT, M6X 16 PLATED	2							
31	1	977770-1207F	GASKET.LIQUID	1							1

N:Old ←Yes/No→ New. Q:Old ←No/Yes→ New. R:Old ←Yes/Yes→ New. S:Old ←No/No→ New. W:Add. Z:Discontinued. F:Interchangeable by set. K:Q'ty Change

Copyright (C) YANMAR CO., LTD. All RightsReserved.

Fig.3. FLYWHEEL HOUSING & OIL SUMP

(A)=4TNV84T-GGEH (D)=
(B)= (E)=
(C)= (F)=

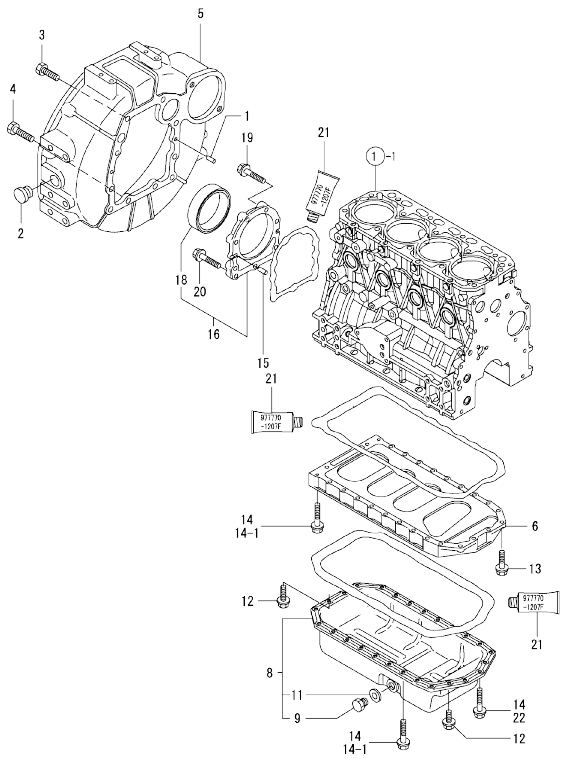

No.	Lev.	Parts No.	Description	Q'ty (A)	(B)	(C)	(D)	(E)	(F)	I	R
1	1	129100-01580	PIN, M8X16	2							
2	1	119620-01750	CAP	1							
3	1	26206-100252	BOLT, M10X 25 PLATED	6							
4	1	26206-100302	BOLT, M10X 30 PLATED	4							
5	1	171420-01600	HOUSING, FLYWHEEL	1							
6	1	129400-01730	SPACER, OIL SUMP	1							
8	1	129400-01770	SUMP ASSY, OIL	1							
8-1	1	129688-01780	OIL PAN ASSY, DEEP	1						N	
	(A=E51064)										
9	2	119640-01640	PLUG, DRAIN M22	1							
11	2	22190-220002	WASHER, SEAL 22	1							
12	1	26106-080162	BOLT, M8X 16 PLATED	4							
13	1	26106-080252	BOLT, M8X 25 PLATED	2							
14	1	26106-080452	BOLT, M8X 45 PLATED	24							
14-1	1	26106-080452	BOLT, M8X 45 PLATED	20						K	
	(A=FROM 1ST)										
15	1	129100-01580	PIN, M8X16	2							
16	1	129100-01640	CASE ASSY, OIL SEAL	1							
18	2	129795-01780	SEAL, OIL	1							
19	1	129486-01670	BOLT, M8X30	6							
20	1	26106-080352	BOLT, M8X 35 PLATED	3							
21	1	977770-1207F	GASKET.LIQUID	1							1
22	1	26106-080502	BOLT, M8X 50 PLATED	4						W	
	(A=FROM 1ST)										

Remarks
(1) OPTIONAL PART.

N:Old ←Yes/No→ New. Q:Old ←No/Yes→ New. R:Old ←Yes/Yes→ New. S:Old ←No/No→ New. W:Add. Z:Discontinued. F:Interchangeable by set. K:Q'ty Change

Copyright (C) YANMAR CO., LTD. All RightsReserved.

Fig.4. CYLINDER HEAD & BONNET

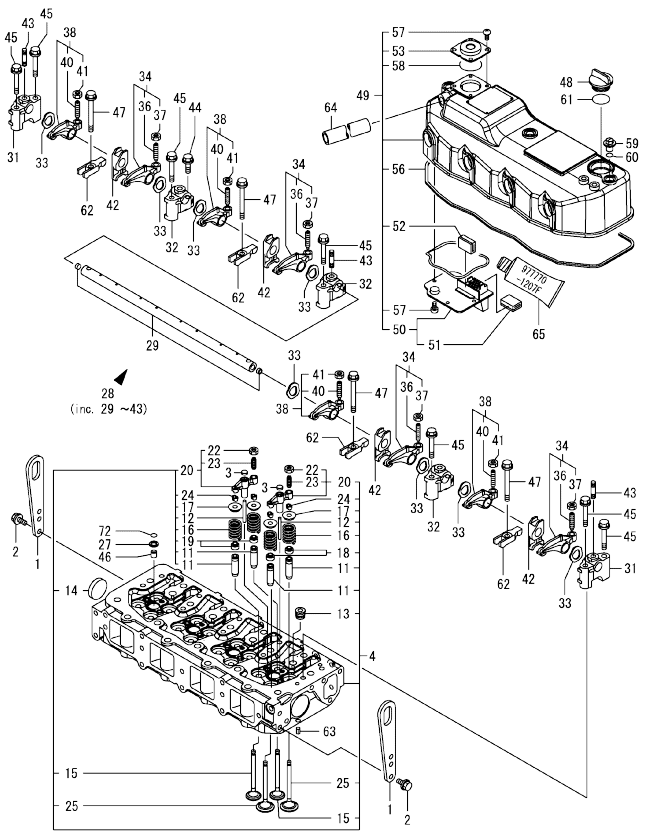

(A)=4TNV84T-GGEH
(B)=
(C)=
(D)=
(E)=
(F)=

No.	Lev.	Parts No.	Description	Q'ty (A)	(B)	(C)	(D)	(E)	(F)	I	R
1	1	129900-07900	LIFTER	2							
2	1	26106-080162	BOLT, M8X 16 PLATED	4							
3	1	123907-11550	SEAT, VALVE BRIDGE	8							
4	1	129508-11700	HEAD ASSY, CYLINDER	1							
11	2	119717-11800	GUIDE, VALVE	16							1
12	2	129508-11820	GUIDE	8							
13	2	23876-020000	PLUG, R02	4							
14	2	27241-400000	PLUG, 40	2							
15	2	129508-11110	VALVE, EXHAUST	8							
16	2	129508-11130	SPRING, VALVE	16							
17	2	129508-11180	RETAINER, SPRING	16							
18	2	119717-11340	SEAL, VALVE STEM	8							
19	2	119717-11350	SEAL, VALVE STEM	8							
20	2	129672-11510	BRIDGE ASSY, VALVE	8							
22	3	129150-11750	NUT, M8	8							
23	3	123907-11830	ADJUSTER	8							
24	2	119717-11190	COTTER	32							
25	2	129508-11100	VALVE, INTAKE	8							
27	1	119625-11880	SEAT, NOZZLE	4							
28	1	129508-11241	SHAFT ASSY, ROCKER	1							
29	2	129508-11250	SHAFT, ROCKER ARM	1							
31	2	129508-11260	SUPPORT, ROCKER ARM	2							
32	2	129508-11270	SUPPORT, ROCKER ARM	3							
33	2	129508-11280	WASHER	8							
34	2	129508-11650	ARM, ROCKER	4							
36	3	129150-11230	SCREW, VALVE ADJUST	4							
37	3	129150-11750	NUT, M8	4							
38	2	129508-11660	ARM, ROCKER	4							
40	3	129150-11230	SCREW, VALVE ADJUST	4							
41	3	129150-11750	NUT, M8	4							
42	2	129508-11920	RETAINER	4							
43	2	26226-080352	STUD, M8X 35	3							
44	1	26106-080252	BOLT, M8X 25 PLATED	3							
45	1	26106-080502	BOLT, M8X 50 PLATED	7							
46	1	119802-11870	PROTECTOR, NOZZLE	4							
47	1	129907-11950	BOLT, M8X75	4							
48	1	124160-01751	COVER, FILLER	1							
49	1	129508-11350	BONNET ASSY, HEAD	1							
50	2	129508-03010	PLATE	1							
51	3	119802-03070	BAFFLE, BREATHER	1							
52	2	129150-03070	BAFFLE, BREATHER	1							
53	2	129006-03120	COVER, DIAPHRAGM	1							
56	2	129508-11310	GASKET, BONNET	1							
57	2	22857-500100	SCREW, 5X10	8							
58	2	24341-000400	O-RING, 1AS40.0	1							
59	1	124160-11360	KNOB	3							
60	1	24311-000120	O-RING, 1AP12.0	3							
61	1	24311-000320	O-RING, 1AP32.0	1							
62	1	129508-11900	RETAINER, NOZZLE	4							
63	1	22351-060012	PIN, SPRING 6.0X12	2							
64	1	129150-03090	HOSE, ID16X2T	1							

Remarks
(1) REPAIR PART.
(2) OPTIONAL PART.

N:Old ←Yes/No→ New. Q:Old ←No/Yes→ New. R:Old ←Yes/Yes→ New. S:Old ←No/No→ New. W:Add. Z:Discontinued. F:Interchangeable by set. K:Q'ty Change

++ CONTINUE ++

Copyright (C) YANMAR CO., LTD. All RightsReserved.

Fig.4. CYLINDER HEAD & BONNET

(A)=4TNV84T-GGEH
(B)=
(C)=
(D)=
(E)=
(F)=

No.	Lev.	Parts No.	Description	Q'ty (A)	(B)	(C)	(D)	(E)	(F)	I	R
65	1	977770-1207F	GASKET.LIQUID	1							2
72	1	24311-000120	O-RING, 1AP12.0	4							

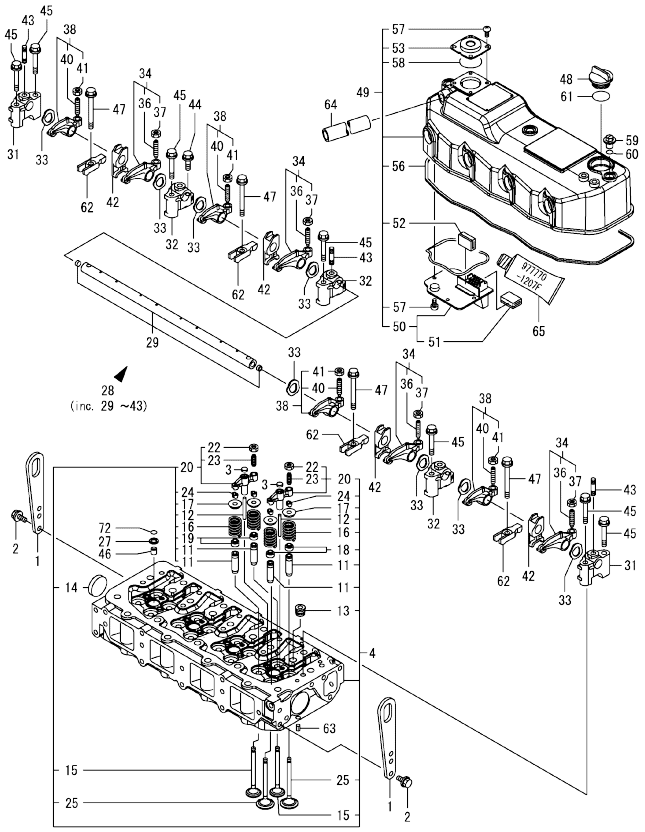

Remarks
(1) REPAIR PART.
(2) OPTIONAL PART.

N:Old ←Yes/No→ New. Q:Old ←No/Yes→ New. R:Old ←Yes/Yes→ New. S:Old ←No/No→ New. W:Add. Z:Discontinued. F:Interchangeable by set. K:Q'ty Change

Copyright (C) YANMAR CO., LTD. All RightsReserved.

Fig.5. SUCTION MANIFOLD & AIR CLEANER

(A)=4TNV84T-GGEH
(B)=
(C)=
(D)=
(E)=
(F)=

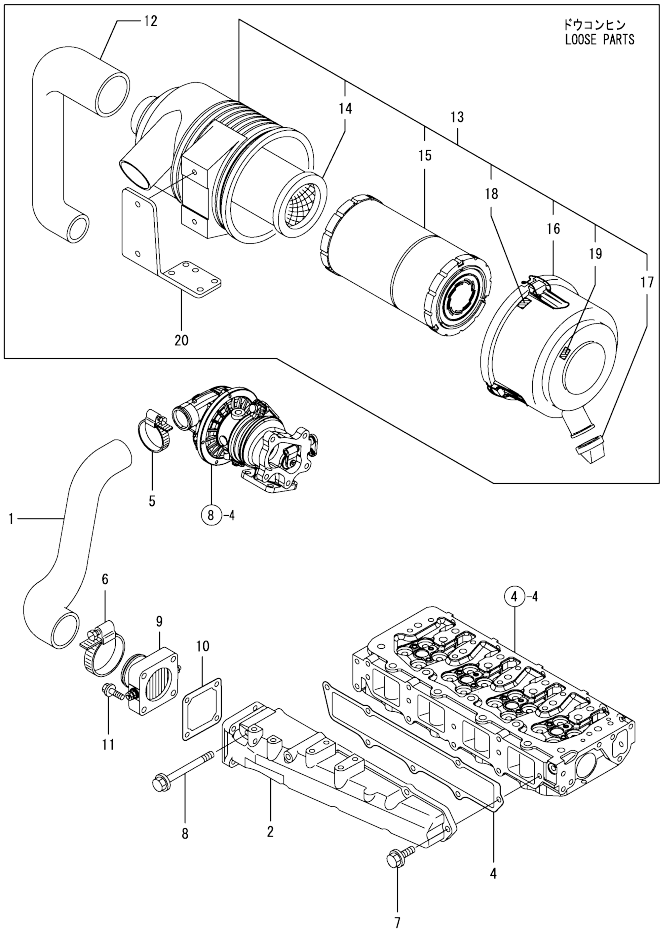

No.	Lev.	Parts No.	Description	Q'ty (A)	(B)	(C)	(D)	(E)	(F)	I	R
1	1	129508-12060	PIPE, AIR INTAKE	1							
2	1	129508-12100	MANIFOLD, AIR INTAKE	1							
4	1	129508-12110	GASKET, MANIFOLD	1							
5	1	23000-048000	CLAMP, 48	1							
6	1	23000-060000	CLAMP, 60	1							
7	1	26106-080202	BOLT, M8X 20 PLATED	5							
8	1	26106-080802	BOLT, M8X 80 PLATED	2							
9	1	129120-77502	HEATER	1							
10	1	129150-77511	GASKET	1							
11	1	26106-080352	BOLT, M8X 35 PLATED	4							
12	1	129508-12080	PIPE, AIR INTAKE	1							
13	1	129915-12500	CLEANER ASSY, AIR	1							
14	2	119005-12571	ELEMENT	1							
15	2	129062-12560	ELEMENT	1							
16	2	129457-12530	COVER	1							
17	2	119808-12540	VALVE, UNLOADER	1							
18	2	129418-12530	LABEL, MARK	2							
19	2	129612-12650	LABEL, MARKING	1							
20	1	129508-12560	BRACKET, AIR CLEANER	1							

N:Old ←Yes/No→ New. Q:Old ←No/Yes→ New. R:Old ←Yes/Yes→ New. S:Old ←No/No→ New. W:Add. Z:Discontinued. F:Interchangeable by set. K:Q'ty Change

Copyright (C) YANMAR CO., LTD. All RightsReserved.

Fig.6. EXHAUST MANIFOLD

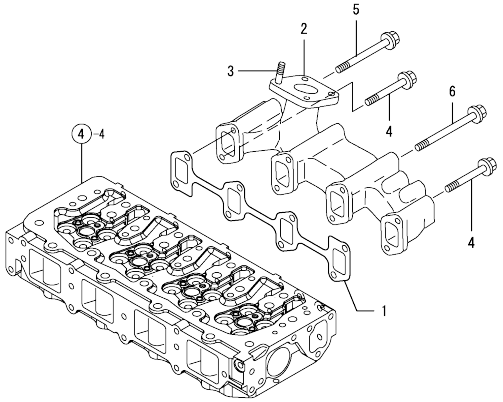

(A)=4TNV84T-GGEH (D)=
(B)= (E)=
(C)= (F)=

No.	Lev.	Parts No.	Description	Q'ty (A)	(B)	(C)	(D)	(E)	(F)	I	R
1	1	129550-13110	GASKET	1							
2	1	129403-13120	MANIFOLD, EXHAUST	1							
3	1	119131-18320	STUD, M8X22	4							
4	1	119802-13650	BOLT, M8X65	3							
5	1	119802-13670	BOLT, M8X85	1							
6	1	129693-44310	BOLT	4							
6-1	1	119802-13820	BOLT, M8X100 9.8T	4						N	
	(A=*2009.12)										

N:Old ←Yes/No→ New. Q:Old ←No/Yes→ New, R:Old ←Yes/Yes→ New. S:Old ←No/No→ New. W:Add. Z:Discontinued. F:Interchangeable by set. K:Q'ty Change

Copyright (C) YANMAR CO., LTD. All RightsReserved.

Fig.7. CAMSHAFT & DRIVING GEAR

(A)=4TNV84T-GGEH
(B)=
(C)=
(D)=
(E)=
(F)=

No.	Lev.	Parts No.	Description	Q'ty (A)	(B)	(C)	(D)	(E)	(F)	I	R
1	1	129150-14200	TAPPET	8							
2	1	129150-14400	ROD, PUSH L=178	8							
3	1	129508-14580	CAMSHAFT ASSY	1							
4	2	129150-02450	BEARING, THRUST	1							
7	2	129150-14101	GEAR, CAMSHAFT	1							
8	2	22512-070140	KEY, 7X 14	1							
9	1	119802-25051	SHAFT, IDLE	1							
10	1	119802-25101	GEAR ASSY, IDLE	1							
13	2	119802-25071	BUSH, IDLE GEAR	1							1
14	1	26106-080402	BOLT, M8X 40 PLATED	3							
15	1	119802-25901	GEAR, PUMP	1							
16	1	129150-25301	BOLT	4							
17	1	26106-080142	BOLT, M8X 14 PLATED	2							
18	1	158552-51151	FLANGE	1							
19	1	22217-140000	WASHER, SPRING 14	1							
20	1	26776-140002	NUT, LOCK M14	1							

Remarks
(1) REPAIR PART.

N:Old ◄Yes/No► New. Q:Old ◄No/Yes► New. R:Old ◄Yes/Yes► New. S:Old ◄No/No► New. W:Add. Z:Discontinued. F:Interchangeable by set. K:Q'ty Change

Copyright (C) YANMAR CO., LTD. All RightsReserved.

Fig.8. TURBINE

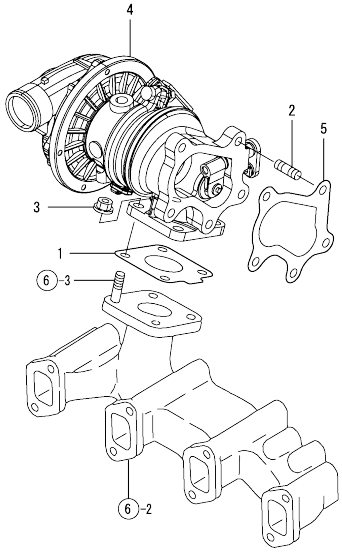

(A)=4TNV84T-GGEH
(B)=
(C)=
(D)=
(E)=
(F)=

No.	Lev.	Parts No.	Description	Q'ty (A)	(B)	(C)	(D)	(E)	(F)	I	R
1	1	129508-18080	GASKET	1							
2	1	129418-18320	STUD, M8X20	5							
3	1	26306-080002	NUT, M8	5							
4	1	129508-18020	TURBINE, RHF4	1							
5	1	129508-18090	GASKET	1							

N:Old ◄Yes/No► New. Q:Old ◄No/Yes► New, R:Old ◄Yes/Yes► New, S:Old ◄No/No► New, W:Add, Z:Discontinued, F:Interchangeable by set, K:Q'ty Change

Copyright (C) YANMAR CO., LTD. All RightsReserved.

Fig.9. CRANKSHAFT & PISTON

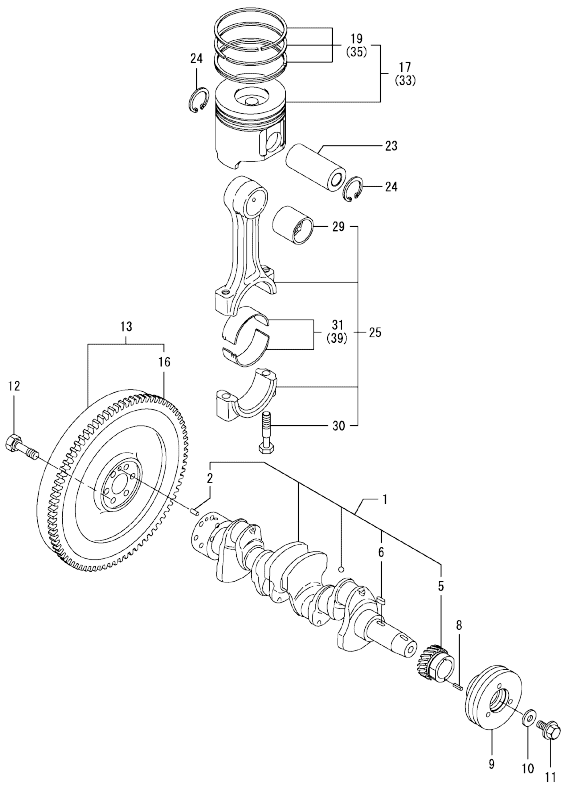

(A)=4TNV84T-GGEH
(B)=
(C)=
(D)=
(E)=
(F)=

No.	Lev.	Parts No.	Description	Q'ty (A)	(B)	(C)	(D)	(E)	(F)	I	R
1	1	129508-21002	CRANKSHAFT ASSY	1							
2	2	129100-01580	PIN, M8X16	1							
5	2	119802-21202	GEAR, CRANKSHAFT	1							
6	2	22512-070140	KEY, 7X 14	1							
8	1	22351-030010	PIN, SPRING 3.0X10	1							
9	1	119802-21660	V-PULLEY, 120	1							
10	1	129795-21661	WASHER	1							
11	1	121850-21680	BOLT	1							
12	1	121111-21501	BOLT, FLYWHEEL	6							
13	1	171420-21590	FLYWHEEL ASSY	1							
16	2	124550-21600	GEAR, RING	1							
17	1	129508-22080	PISTON ASSY	4							
19	2	129004-22500	RING SET, PISTON	4							
23	1	129202-22300	PIN, PISTON D26 L70	4							
24	1	22252-000260	RING, 26	8							
25	1	729402-23100	ROD ASSY, CONNECTING	4							
29	2	129100-23910	BEARING, PISTON PIN	4							1
30	2	121550-23200	BOLT, CONNECTING ROD	8							
31	2	129150-23601	BEARING, CRANK PIN	4							
33	1	129508-22900	PISTON ASSY, 0.25 OS	4							2
35	2	129004-22950	RING SET, 0.25 OS	4							2
39	1	129150-23611	BEARING, 0.25 US	4							3

Remarks
(1) REPAIR PART.
(2) OVER-SIZE(O.S=0.25)PART.
(3) UNDER-SIZE(U.S=0.25)PART.

N:Old ←Yes/No→ New. Q:Old ←No/Yes→ New. R:Old ←Yes/Yes→ New. S:Old ←No/No→ New. W:Add. Z:Discontinued. F:Interchangeable by set. K:Q'ty Change

Copyright (C) YANMAR CO., LTD. All RightsReserved.

Fig.10. LUB.OIL SYSTEM

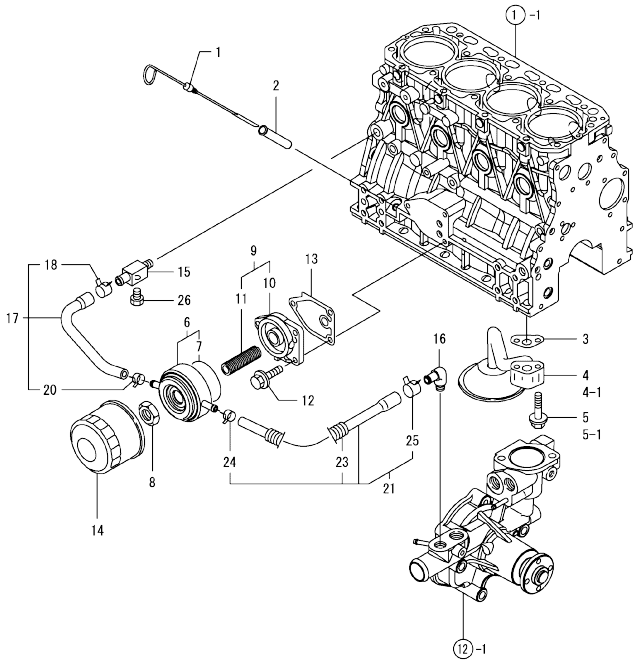

(A)=4TNV84T-GGEH (D)=
(B)= (E)=
(C)= (F)=

No.	Lev.	Parts No.	Description	Q'ty (A)	(B)	(C)	(D)	(E)	(F)	I	R
1	1	129004-34802	DIPSTICK, OIL	1							
2	1	121520-34810	GUIDE, DIPSTICK	1							
3	1	129150-35042	GASKET	1							
4	1	129436-35091	PIPE ASSY, OIL INLET	1							
4-1	1	129436-35070	PIPE ASSY	1						S	
	(A=EZZZZZ)										
5	1	26106-080352	BOLT, M8X 35 PLATED	2							
5-1	1	26106-080552	BOLT, M8X 55 PLATED	2						S	
	(A=EZZZZZ)										
6	1	129508-33010	COOLER ASSY, OIL	1							
7	2	129508-33050	O-RING	1							
8	1	129417-33110	NUT	1							
9	1	129006-35100	BRACKET ASSY, FILTER	1							
10	2	119802-35110	BRACKET, FILTER	1							
11	2	129417-35150	STUD, L=67	1							
12	1	26106-080202	BOLT, M8X 20 PLATED	3							
13	1	129150-35111	GASKET	1							
14	1	129150-35170	FILTER,LO	1							1
15	1	129006-44480	JOINT	1							
16	1	129103-49301	ELBOW, PT1/4	1							
17	1	129508-49030	PIPE ASSY, WATER	1							
18	2	171008-03990	CLIP, HOSE 18.5	1							
20	2	23080-015000	CLAMP, 15	1							
21	1	129508-49040	PIPE ASSY, WATER	1							
23	2	119940-59130	TUBE, CORRUGATED	1							
24	2	23080-015000	CLAMP, 15	1							
25	2	23080-018000	CLAMP, 18	1							
26	1	171056-49120	PLUG, DRAIN	1							

Remarks
(1) REPAIR PART.

N:Old ←Yes/No→ New. Q:Old ←No/Yes→ New. R:Old ←Yes/Yes→ New. S:Old ←No/No→ New. W:Add. Z:Discontinued. F:Interchangeable by set. K:Q'ty Change

Copyright (C) YANMAR CO., LTD. All RightsReserved.

Fig.11. LUB.OIL LINE

(A)=4TNV84T-GGEH
(B)=
(C)=
(D)=
(E)=
(F)=

No.	Lev.	Parts No.	Description	Q'ty (A)	(B)	(C)	(D)	(E)	(F)	I	R
1	1	129792-39410	VALVE ASSY, CHECK	4							
7	1	129553-39650	NOZZLE	4							
8	1	114250-39450	SWITCH, 0.5KG	1							
9	1	124160-39140	BOLT, PIPE JOINT M10	1							
10	1	22190-080002	WASHER, SEAL 6	1							
11	1	22190-100002	WASHER, SEAL 10	2							
12	1	129005-59830	BOLT ASSY, JOINT M8	1							
13	2	22190-080002	WASHER, SEAL 6	1							
14	2	23857-030000	BOLT, JOINT 3	1							
15	1	26106-080122	BOLT, M8X 12 PLATED	1							
16	1	121252-39150	BOLT, JOINT M10X1.5	1							
17	1	129508-39450	PIPE ASSY, OIL	1							
18	2	119802-39500	RETAINER, PIPE	1							
19	2	124223-39900	RETAINER	1							
20	1	124070-13300	ELBOW, PT3/8	1							
21	1	129508-39600	PIPE, OIL	1							
22	1	123901-39820	HOSE	1							
23	1	23000-025000	CLAMP, 25	2							
24	1	24316-000160	O-RING, 4DP16.0	1							
25	1	26106-060162	BOLT, M6X 16 PLATED	2							
26	1	22351-030010	PIN, SPRING 3.0X10	4							
27	1	23414-100000	GASKET, 10X1.0	2							
28	1	26366-060002	NUT, M6	1							

N:Old ←Yes/No→ New. Q:Old ←No/Yes→ New. R:Old ←Yes/Yes→ New. S:Old ←No/No→ New. W:Add. Z:Discontinued. F:Interchangeable by set. K:Q'ty Change

Copyright (C) YANMAR CO., LTD. All RightsReserved.

Fig.12. COOLING WATER SYSTEM

(A)=4TNV84T-GGEH
(B)=
(C)=
(D)=
(E)=
(F)=

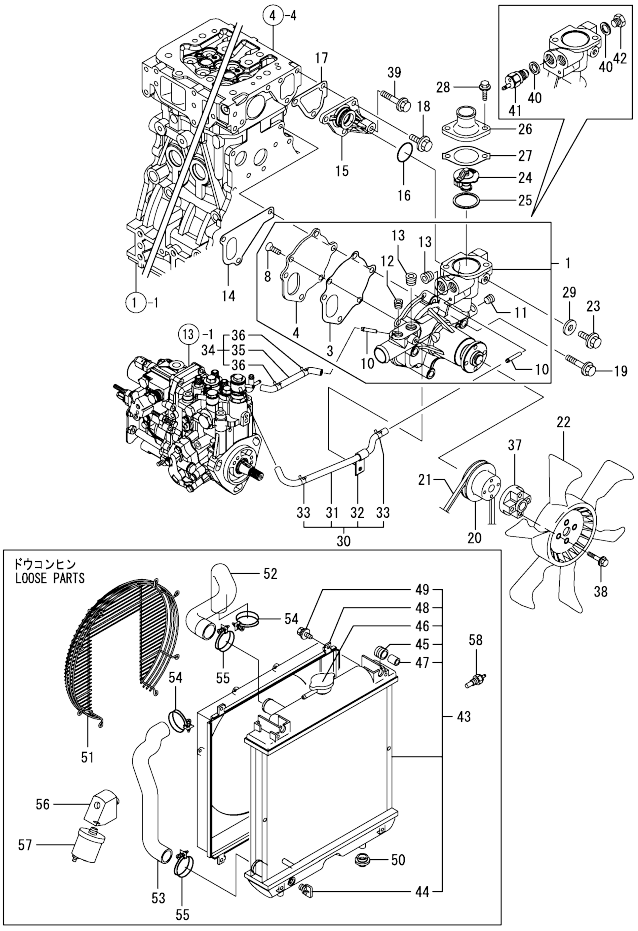

No.	Lev.	Parts No.	Description	Q'ty (A)	(B)	(C)	(D)	(E)	(F)	I	R
1	1	129508-42001	PUMP ASSY, WATER	1							
3	2	129100-42051	GASKET, WATER PUMP	1							
4	2	129100-42121	PLATE	1							
8	2	121850-42410	SCREW	3							
10	2	119802-49113	JOINT, PIPE	2							
11	2	23876-010000	PLUG, R01	1							
12	2	23876-020000	PLUG, R02	1							
13	2	129916-49740	PLUG, R03	2							
14	1	129486-42021	GASKET, WATER PUMP	1							
15	1	129004-42040	JOINT	1							
16	1	129486-42140	O-RING, G30	1							
17	1	124395-49840	GASKET	1							
18	1	26106-080162	BOLT, M8X 16 PLATED	3							
19	1	26106-080602	BOLT, M8X 60 PLATED	3							
20	1	129155-42350	V-PULLEY	1							
21	1	119831-42290	V-BELT, A37.5	1							
22	1	129612-44700	FAN, COOLING	1							
23	1	26106-080122	BOLT, M8X 12 PLATED	1							
24	1	129155-49801	THERMOSTAT, 71	1							
25	1	129150-49811	GASKET, THERMOSTAT	1							
26	1	129350-49530	COVER, THERMOSTAT	1							
27	1	129795-49551	GASKET	1							
28	1	26106-080222	BOLT, M8X 22 PLATED	2							
29	1	23414-080000	GASKET, 8X1.0	1							
30	1	129004-49610	PIPE ASSY, WATER	1							
31	2	129004-49711	PIPE ASSY, WATER	1							
32	2	119802-49730	RETAINER, PIPE	1							
33	2	124722-59050	CLIP, HOSE 9	2							
34	1	129004-49620	PIPE ASSY, WATER	1							
35	2	129004-49721	PIPE ASSY, WATER	1							
36	2	124722-59050	CLIP, HOSE 9	2							
37	1	121267-44760	SPACER	1							
38	1	26106-060302	BOLT, M6X 30 PLATED	4							
39	1	26106-080452	BOLT, M8X 45 PLATED	1							
40	1	124465-44950	GASKET, 16	2							
41	1	121250-44901	SWITCH, 110	1							
42	1	121450-42450	PLUG, M16	1							
43	1	129508-44501	RADIATOR ASSY	1							
44	2	129508-44550	COCK ASSY	1							
45	2	118400-44720	MOUNT, RUBBER	2							
46	2	129107-44590	CAP, RADIATOR	1							
47	2	118400-44670	COLLAR	2							
48	2	129601-44600	SHROUD	1							
49	2	26014-060122	BOLT, M6X 12	4							
50	1	119255-44660	ABSORBER	2							
51	1	129601-44560	GUARD	1							
52	1	129602-49010	PIPE, WATER	1							
53	1	129508-49020	PIPE, WATER	1							
54	1	23010-038000	CLAMP, 38	2							
55	1	23010-044000	CLAMP, 44	2							
56	1	129915-39600	DAMPER, R1/8	1							

N:Old ◄Yes/No► New. Q:Old ◄No/Yes► New. R:Old ◄Yes/Yes► New. S:Old ◄No/No► New. W:Add. Z:Discontinued. F:Interchangeable by set. K:Q'ty Change

++ CONTINUE ++

Copyright (C) YANMAR CO., LTD. All RightsReserved.

Fig.12. COOLING WATER SYSTEM

(A)=4TNV84T-GGEH
(B)=
(C)=
(D)=
(E)=
(F)=

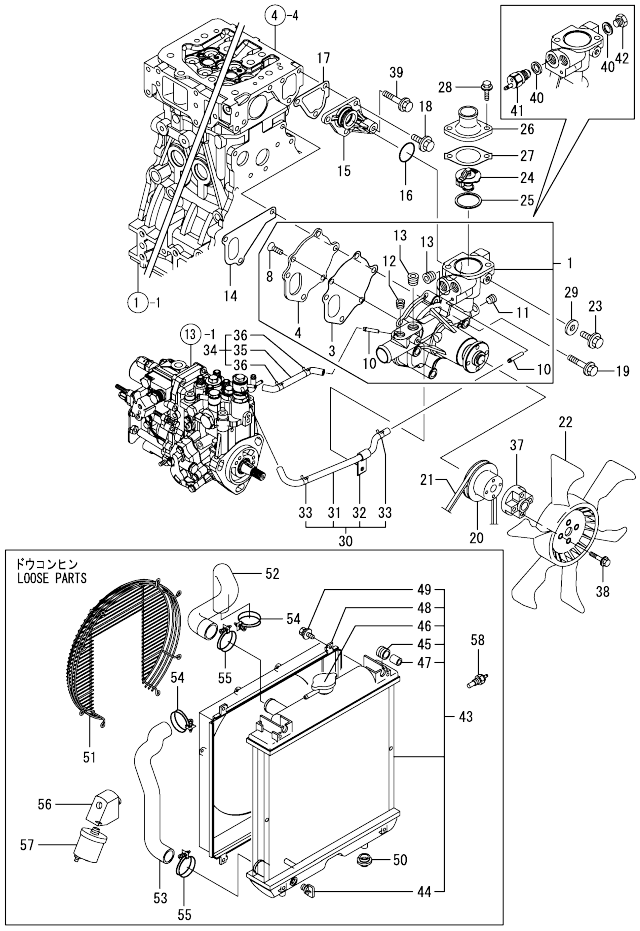

No.	Lev.	Parts No.	Description	Q'ty (A)	(B)	(C)	(D)	(E)	(F)	I	R
57	1	119773-91501	SENSOR	1							
58	1	124250-49351	SENSOR	1							

N:Old ←Yes/No→ New. Q:Old ←No/Yes→ New. R:Old ←Yes/Yes→ New. S:Old ←No/No→ New. W:Add. Z:Discontinued. F:Interchangeable by set. K:Q'ty Change

Copyright (C) YANMAR CO., LTD. All RightsReserved.

Fig.13. FUEL INJECTION PUMP

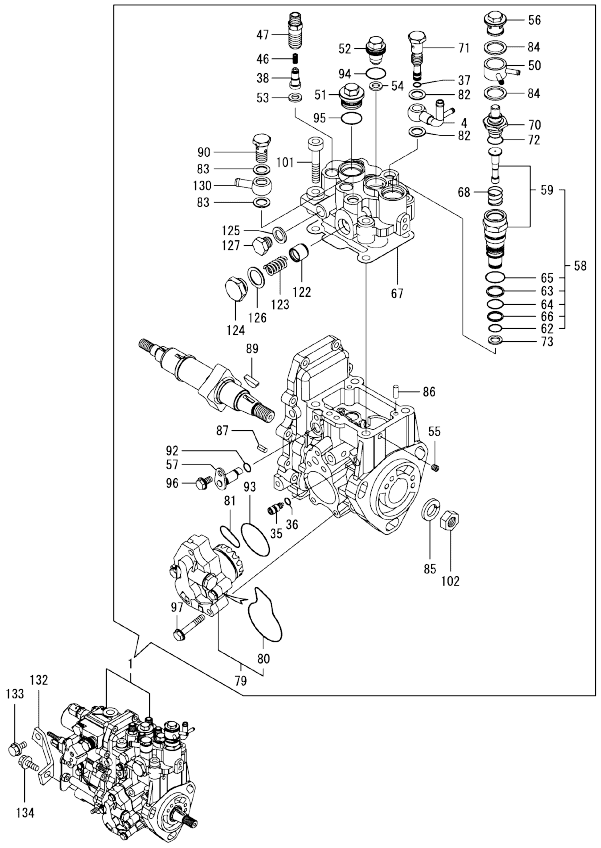

Remarks
(1) GOVERNOR ASSY(FIG.14) IS INCORPORATED IN THIS FOP.CMP (REF.NO.1).

(A)=4TNV84T-GGEH (D)=
(B)= (E)=
(C)= (F)=

No.	Lev.	Parts No.	Description	Q'ty (A)	(B)	(C)	(D)	(E)	(F)	I	R
1	1	729649-51390	PUMP ASSY, INJECTION	1							1
4	2	158552-51670	JOINT, OVER FLOW	1							
35	2	158600-51270	STOPPER, TAPPET	1							
36	2	158563-51281	O-RING, 4D S6	1							
37	2	158563-51281	O-RING, 4D S6	1							
38	2	158560-51300	VALVE ASSY, DELIVERY	4							
46	2	158563-51330	SPRING, DELIVERY	4							
47	2	158601-51340	HOLDER, DELIVERY	4							
50	2	158553-51551	JOINT	1							
51	2	158601-51550	PLUG	1							
52	2	119802-51560	PLUG, BARREL	1							
53	2	158552-51570	GASKET	4							
54	2	158552-51570	GASKET	1							
55	2	158557-51570	PLUG	1							
56	2	158601-51570	PLUG	1							
57	2	158552-51580	LIFTER	1							
58	2	119802-51590	TIMER SET	1							
59	3	119802-51600	TIMER ASSY	1							
62	3	158553-51670	O-RING, 1011	1							
63	3	119802-51680	RING, BACK UP	1							
64	3	119802-51690	O-RING	1							
65	3	24356-010200	O-RING, 4D1020	1							
66	3	24372-000150	RING, BACK UP T2P15	1							
67	2	158552-51600	GASKET	1							
68	2	158553-51630	SPRING, TIMER	1							
70	2	158553-51640	ELEMENT	1							
71	2	158601-51650	JOINT, OVER FLOW	1							
72	2	158553-51660	O-RING, P14	1							
73	2	158553-51680	GASKET	1							
79	2	158552-52100	PUMP ASSY, FUEL FEED	1							
80	3	158552-52500	O-RING	1							
81	2	158552-52310	O-RING	1							
82	2	22190-120002	WASHER, SEAL 12	2							
83	2	22190-120002	WASHER, SEAL 12	2							
84	2	22190-180002	WASHER, SEAL 18	2							
85	2	22217-140000	WASHER, SPRING 14	1							
86	2	22312-050140	PIN, PARALLEL M5X14	2							
87	2	22351-050010	PIN, SPRING 5.0X10	2							
89	2	119802-51090	KEY, 4X16	1							
90	2	23857-060000	BOLT, JOINT 6	1							
92	2	24311-000070	O-RING, 1AP7.0	1							
93	2	158552-52400	O-RING, 4E S42	1							
94	2	24356-010180	O-RING, 4D1018	1							
95	2	24356-010200	O-RING, 4D1020	1							
96	2	26106-060102	BOLT, M6X 10 PLATED	1							
97	2	158553-51770	BOLT	4							
101	2	26450-080452	BOLT, M8X 45	4							
102	2	26776-140002	NUT, LOCK M14	1							
122	2	158601-51770	PISTON	1							
123	2	158552-51781	SPRING	1							
124	2	158601-51790	PLUG	1							

N:Old ←Yes/No→ New. Q:Old ←No/Yes→ New. R:Old ←Yes/Yes→ New. S:Old ←No/No→ New. W:Add. Z:Discontinued. F:Interchangeable by set. K:Q'ty Change

++ CONTINUE ++

Copyright (C) YANMAR CO., LTD. All RightsReserved.

Fig.13. FUEL INJECTION PUMP

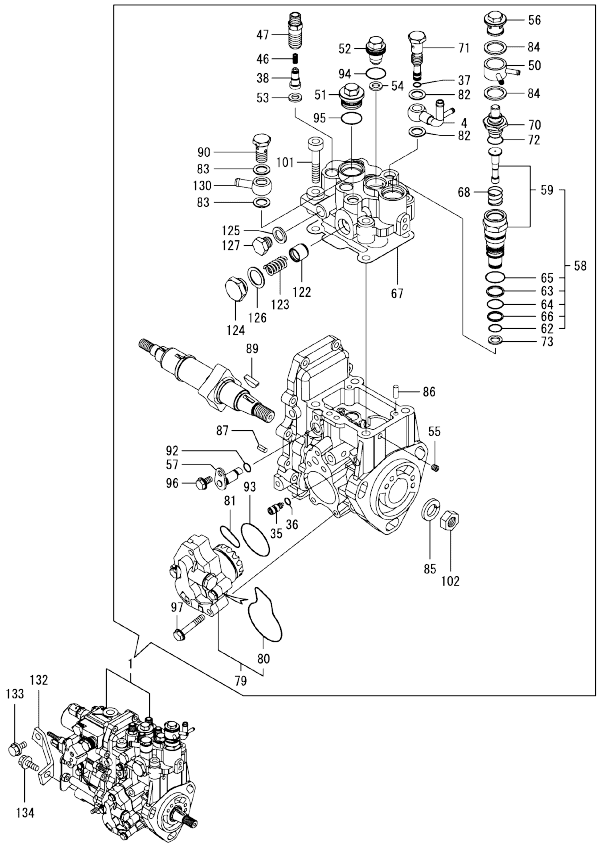

Remarks
(1) GOVERNOR ASSY(FIG.14) IS INCORPORATED IN THIS FOP.CMP (REF.NO.1).

(A)=4TNV84T-GGEH (D)=
(B)= (E)=
(C)= (F)=

No.	Lev.	Parts No.	Description	Q'ty (A)	(B)	(C)	(D)	(E)	(F)	I	R
125	2	22190-120002	WASHER, SEAL 12	1							
126	2	22190-180002	WASHER, SEAL 18	1							
127	2	23887-120002	PLUG, 12	1							
130	2	129916-59020	JOINT, PIPE 12	1							
132	1	129601-51250	RETAINER, PUMP	1							
133	1	26106-080162	BOLT, M8X 16 PLATED	1							
134	1	26106-080202	BOLT, M8X 20 PLATED	1							

N:Old ←Yes/No→ New. Q:Old ←No/Yes→ New. R:Old ←Yes/Yes→ New. S:Old ←No/No→ New. W:Add. Z:Discontinued. F:Interchangeable by set. K:Q'ty Change

Copyright (C) YANMAR CO., LTD. All RightsReserved.

Fig.14. GOVERNOR

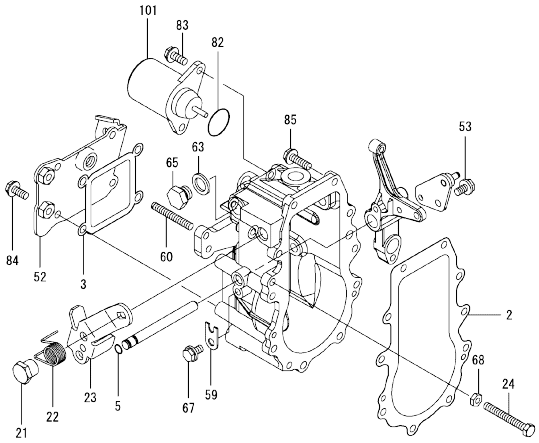

Remarks
* THIS FIGURE(GOVERNOR ASSY)IS INCORPORATED IN THE FUEL INJECTION PUMP ASSY(FIG.13).

(A)=4TNV84T-GGEH (D)=
(B)= (E)=
(C)= (F)=

No.	Lev.	Parts No.	Description	Q'ty (A)	(B)	(C)	(D)	(E)	(F)	I	R
2	2	158553-61050	GASKET	1							
3	2	158553-61070	GASKET	1							
5	2	129155-51280	O-RING, S6	1							
21	2	129255-61410	NUT, LOCK	1							
22	2	119807-61420	SPRING, RETURN	1							
23	2	129246-61441	LEVER, REGULATOR	1							
24	2	129155-61460	BOLT, IDLE	1							
52	2	129246-61061	COVER, GOVERNOR CASE	1							
53	2	26106-060102	BOLT, M6X 10 PLATED	1							
59	2	119660-61901	RETAINER, SHAFT	1							
60	2	171002-66830	SCREW	1							
63	2	22190-120000	WASHER, SEAL 12	1							
65	2	23887-120002	PLUG, 12	1							
67	2	26106-060102	BOLT, M6X 10 PLATED	1							
68	2	26756-060002	NUT, LOCK M6	1							
82	2	158552-61900	O-RING	1							
83	2	26106-060142	BOLT, M6X 14 PLATED	2							
84	2	26106-060142	BOLT, M6X 14 PLATED	4							
85	2	26106-060202	BOLT, M6X 20 PLATED	10							
101	2	119653-77950	SOLENOID, STOP	1							

N:Old ←Yes/No→ New. Q:Old ←No/Yes→ New. R:Old ←Yes/Yes→ New. S:Old ←No/No→ New. W:Add. Z:Discontinued. F:Interchangeable by set. K:Q'ty Change

Copyright (C) YANMAR CO., LTD. All RightsReserved.

Fig.15. FUEL INJECTION VALVE

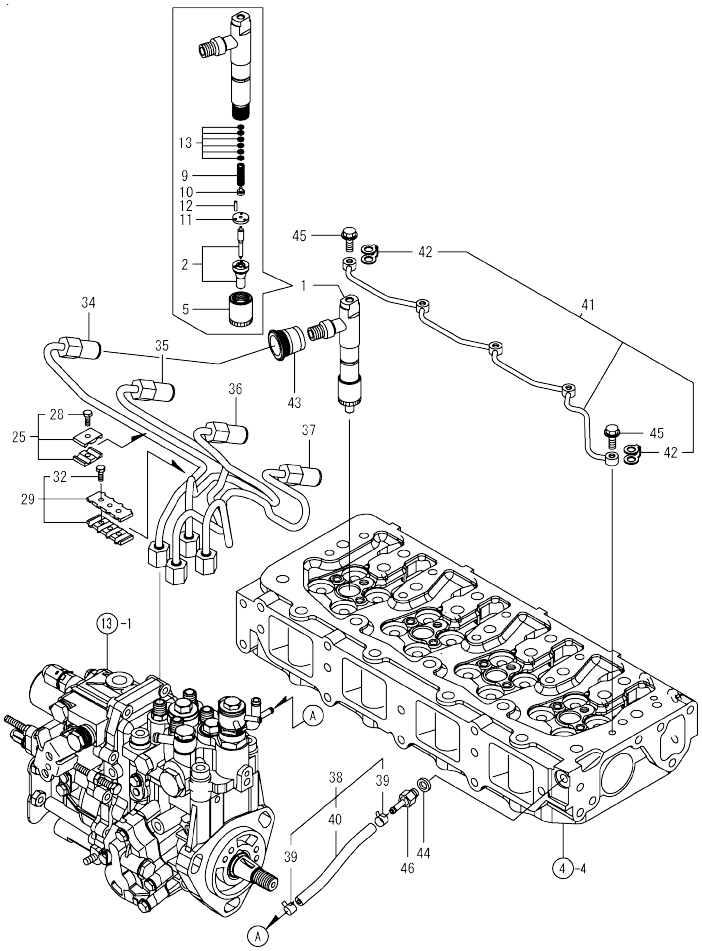

(A)=4TNV84T-GGEH (D)=
(B)= (E)=
(C)= (F)=

No.	Lev.	Parts No.	Description	Q'ty (A)	(B)	(C)	(D)	(E)	(F)	I	R
1	1	729649-53100	VALVE ASSY,INJECTION	4							
2	2	129649-53000	VALVE ASSY,INJECTION	4							
5	2	114250-53080	NUT, NOZZLE D16.95	4							
9	2	114250-53120	SPRING, NOZZLE	4							
10	2	114250-53130	SEAT, SPRING	4							
11	2	114250-53140	PLATE	4							
12	2	114250-53210	PIN	8							
13	2	114250-53400	SHIM SET	4							
25	1	119305-59120	RETAINER, PIPE	2							
28	2	129150-59131	BOLT, M4X14	2							
29	1	129550-59120	RETAINER, PIPE	1							
32	2	129150-59131	BOLT, M4X14	2							
34	1	129508-59910	PIPE ASSY, INJECTION	1							
35	1	129508-59920	PIPE ASSY, INJECTION	1							
36	1	129508-59930	PIPE ASSY, INJECTION	1							
37	1	129508-59940	PIPE ASSY, INJECTION	1							
38	1	129508-59570	PIPE ASSY, RETURN	1							
39	2	124722-59050	CLIP, HOSE 9	2							
40	2	129508-59510	PIPE, FUEL RETURN	1							
41	1	129508-59550	PIPE ASSY, RETURN	1							
42	2	123907-59550	GASKET	5							
43	1	123907-11601	SEAL	4							
44	1	22190-080002	WASHER, SEAL 6	1							
45	1	123907-59540	BOLT, PIPE JOINT M6	5							
46	1	123907-59560	JOINT	1							

N:Old ←Yes/No→ New. Q:Old ←No/Yes→ New. R:Old ←Yes/Yes→ New. S:Old ←No/No→ New. W:Add. Z:Discontinued. F:Interchangeable by set. K:Q'ty Change

Copyright (C) YANMAR CO., LTD. All RightsReserved.

Fig.16. FUEL LINE

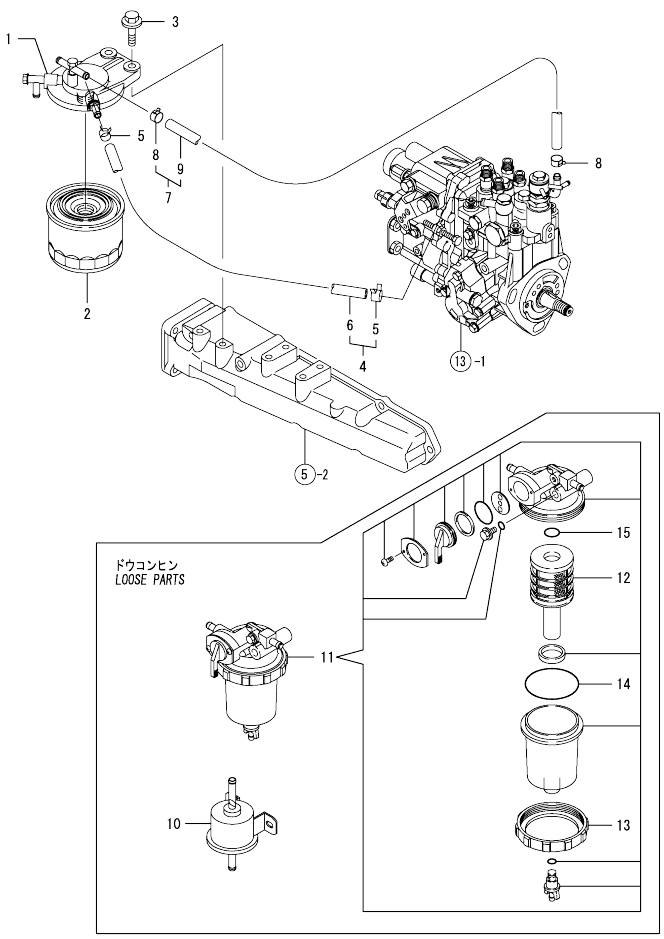

(A)=4TNV84T-GGEH (D)=
(B)= (E)=
(C)= (F)=

No.	Lev.	Parts No.	Description	Q'ty (A)	(B)	(C)	(D)	(E)	(F)	I	R
1	1	129004-55612	BRACKET, FILTER	1							
2	1	119802-55810	FILTER,FO	1							
3	1	26106-080302	BOLT, M8X 30 PLATED	2							
4	1	129210-59110	PIPE ASSY, FUEL	1							
5	2	124766-59050	CLIP, HOSE 12	2							
6	2	105025-59560	PIPE, FUEL	1							
7	1	129210-59160	PIPE ASSY, FUEL	1							
8	2	124766-59050	CLIP, HOSE 12	2							
9	2	129612-59520	PIPE, FUEL	1							
10	1	119225-52102	PUMP ASSY, FUEL FEED	1							
11	1	119802-55700	SEPARATOR ASSY	1							
12	2	119802-55710	ELEMENT	1							
13	2	129100-55690	RING, RETAINING	1							
14	2	24321-000650	O-RING, 1AG65.0	1							
15	2	24311-000160	O-RING, 1AP16.0	1							

N:Old ◄Yes/No► New. Q:Old ◄No/Yes► New. R:Old ◄Yes/Yes► New. S:Old ◄No/No► New. W:Add. Z:Discontinued. F:Interchangeable by set. K:Q'ty Change

Copyright (C) YANMAR CO., LTD. All RightsReserved.

Fig.17. STARTING MOTOR

(A)=4TNV84T-GGEH (D)=
(B)= (E)=
(C)= (F)=

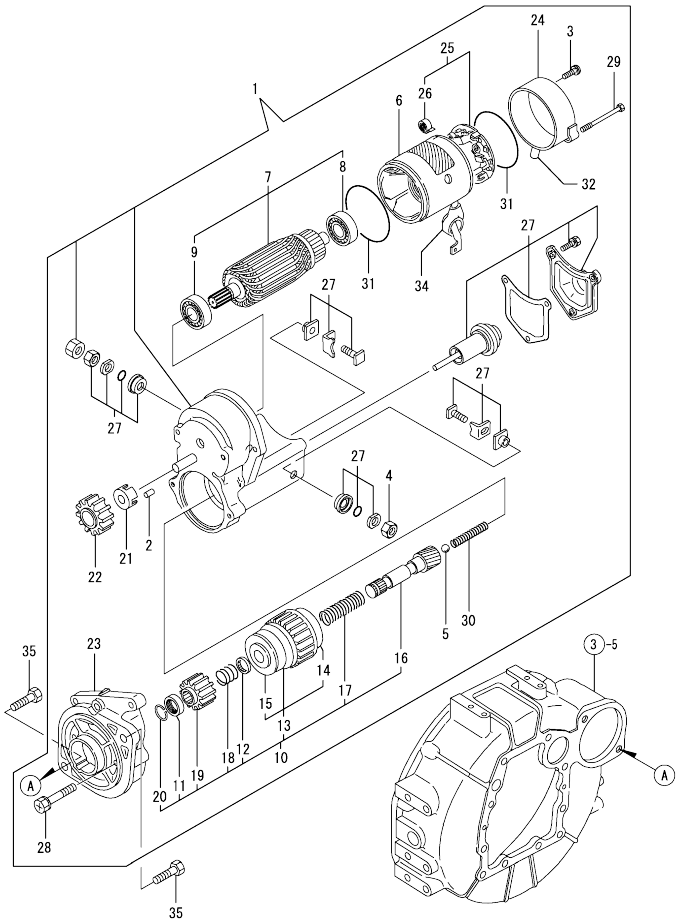

No.	Lev.	Parts No.	Description	Q'ty (A)	(B)	(C)	(D)	(E)	(F)	I	R
1	1	129407-77010	STARTER, RA1.4	1							
2	2	X0283060061	ROLLER	5							
3	2	129129-77460	SCREW	2							
4	2	X9490561370	NUT	1							
5	2	X9491200240	BALL	1							
6	2	129407-77210	YOKE ASSY	1							
7	2	129407-77220	ARMATURE ASSY	1							
8	3	129129-77230	BEARING	1							
9	3	129129-77240	BEARING	1							
10	2	129407-77250	STARTER	1							
11	3	X0280210230	NUT	1							
12	3	X0283270140	RETAINER	1							
13	3	129407-77390	CLUTCH ASSY	1							
14	4	129129-77440	BEARING, BALL	1							
15	4	129129-77450	BEARING, BALL	1							
16	3	129129-77400	SHAFT	1							
17	3	129129-77410	SPRING, COIL	1							
18	3	X9491703371	SPRING, COIL	1							
19	3	129129-77420	PINION, STARTER	1							
20	3	129129-77430	RING	1							
21	2	129129-77260	RETAINER	1							
22	2	129129-77270	PINION	1							
23	2	129407-77280	HOUSING	1							
24	2	129407-77290	FRAME	1							
25	2	129407-77300	HOLDER ASSY	1							
26	3	X9491730461	SPRING	4							
27	2	129407-77310	SWITCH ASSY	1							
28	2	129129-77320	BOLT	2							
29	2	129407-77330	BOLT	2							
30	2	129129-77340	SPRING	1							
31	2	129129-77350	O-RING	2							
32	2	129129-77362	COVER	1							
34	2	129129-77380	CAP	1							
35	1	26116-120252	BOLT, M12X 25 PLATED	2							

N:Old ←Yes/No→ New. Q:Old ←No/Yes→ New. R:Old ←Yes/Yes→ New. S:Old ←No/No→ New. W:Add. Z:Discontinued. F:Interchangeable by set. K:Q'ty Change

Copyright (C) YANMAR CO., LTD. All RightsReserved.

Fig.18. GENERATOR

(A)=4TNV84T-GGEH
(B)=
(C)=
(D)=
(E)=
(F)=

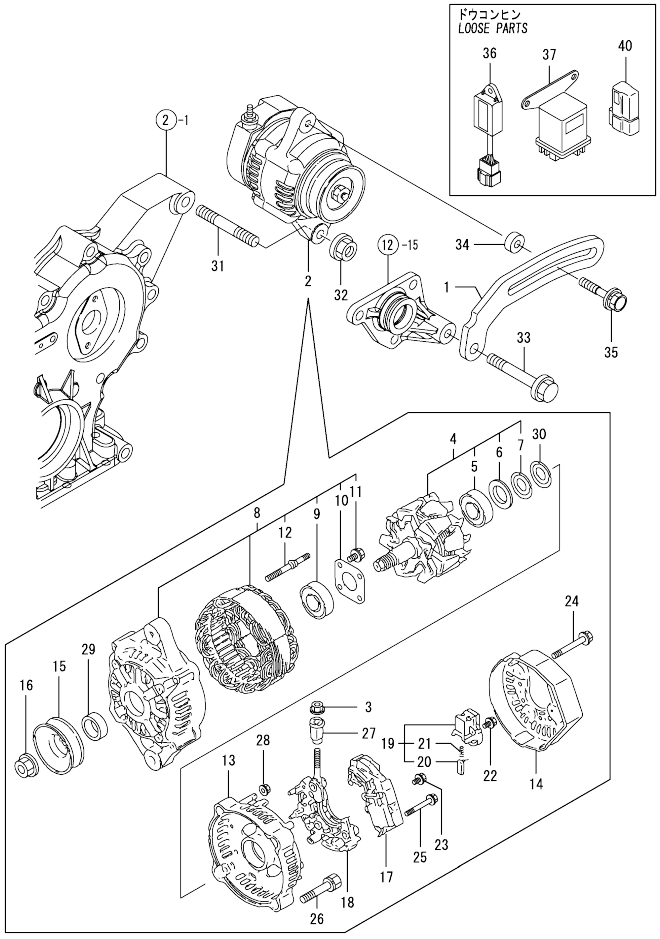

No.	Lev.	Parts No.	Description	Q'ty (A)	(B)	(C)	(D)	(E)	(F)	I	R
1	1	119940-77330	ADJUSTER	1							
2	1	129423-77200	GENERATOR, 12V-40A	1							
3	2	X9490561001	NUT	1							
4	2	119620-77380	ROTOR ASSY	1							
5	3	119620-79240	BEARING, BALL	1							
6	3	119620-79250	COVER	1							
7	3	119620-79360	WASHER, THRUST	1							
8	2	119620-77421	FRAME ASSY, DRIVE	1							
9	3	119620-79200	BEARING, BALL	1							
10	3	119620-79210	PLATE, RETAINER	1							
11	3	119620-79220	SCREW	4							
12	3	119620-79230	STUD	2							
13	2	119620-77440	FRAME ASSY	1							
14	2	129240-79300	COVER	1							
15	2	119620-77461	PULLEY	1							
16	2	119620-77471	NUT	1							
17	2	129423-77710	REGULATOR ASSY	1							
18	2	119620-79260	HOLDER	1							
19	2	119620-79270	HOLDER, BRUSH	1							
20	3	119620-77480	BRUSH ASSY	2							
21	3	119620-79280	SPRING	2							
22	2	119620-79290	SCREW	1							
23	2	119620-79300	SCREW	1							
24	2	119620-79310	BOLT	3							
25	2	119620-79320	SCREW	2							
26	2	119620-79330	BOLT	2							
27	2	119620-79340	BUSH, INSULATION	1							
28	2	119620-79350	NUT	2							
29	2	119620-77490	COLLAR	1							
30	2	119620-79360	WASHER, THRUST	1							
31	1	129795-01900	STUD	1							
32	1	26306-100002	NUT, M10	1							
33	1	26106-080452	BOLT, M8X 45 PLATED	1							
34	1	119940-77270	SPACER, GENERATOR	1							
35	1	129972-77341	BOLT, ADJUSTER L=50	1							
36	1	129211-77920	TIMER	1							
37	1	119650-77910	RELAY ASSY, GLOW	1							
40	1	119643-66900	DIODE	1							

N:Old ←Yes/No→ New. Q:Old ←No/Yes→ New. R:Old ←Yes/Yes→ New. S:Old ←No/No→ New. W:Add. Z:Discontinued. F:Interchangeable by set. K:Q'ty Change

Copyright (C) YANMAR CO., LTD. All RightsReserved.

Fig.19. GASKET SET

(A)=4TNV84T-GGEH
(B)=
(C)=
(D)=
(E)=
(F)=

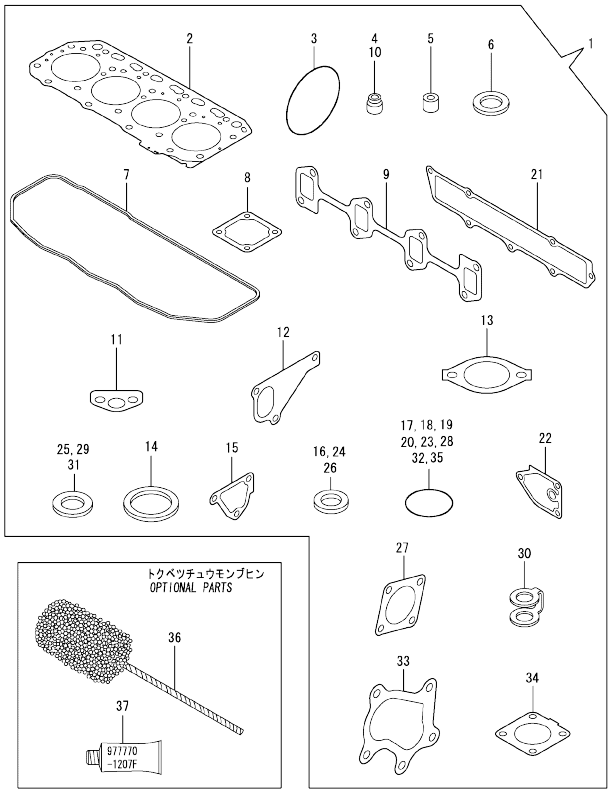

No.	Lev.	Parts No.	Description	Q'ty (A)	(B)	(C)	(D)	(E)	(F)	I	R
1	1	729508-92780	GASKET SET	1							1
2	2	129508-01330	GASKET, HEAD	1							
3	2	121850-51960	O-RING	1							
4	2	119717-11340	SEAL, VALVE STEM	8							
5	2	119802-11870	PROTECTOR, NOZZLE	4							
6	2	119625-11880	SEAT, NOZZLE	4							
7	2	129508-11310	GASKET, BONNET	1							
8	2	129150-77511	GASKET	1							
9	2	129550-13110	GASKET	1							
10	2	119717-11350	SEAL, VALVE STEM	8							
11	2	129150-35042	GASKET	1							
12	2	129486-42021	GASKET, WATER PUMP	1							
13	2	129795-49551	GASKET	1							
14	2	129150-49811	GASKET, THERMOSTAT	1							
15	2	124395-49840	GASKET	1							
16	2	22190-080002	WASHER, SEAL 6	3							
17	2	24311-000120	O-RING, 1AP12.0	3							
18	2	24311-000320	O-RING, 1AP32.0	2							
19	2	24341-000240	O-RING, 1AS24.0	1							
20	2	129486-42140	O-RING, G30	1							
21	2	129508-12110	GASKET, MANIFOLD	1							
22	2	129150-35111	GASKET	1							
23	2	119609-32040	O-RING, P16	4							
24	2	22190-100002	WASHER, SEAL 10	2							
25	2	23414-080000	GASKET, 8X1.0	1							
26	2	22190-220002	WASHER, SEAL 22	1							
27	2	124240-01883	GASKET	1							
28	2	24321-000800	O-RING, 1AG80.0	1							
29	2	23414-100000	GASKET, 10X1.0	2							
30	2	123907-59550	GASKET	5							
31	2	124465-44950	GASKET, 16	2							
32	2	24341-000400	O-RING, 1AS40.0	1							
33	2	129508-18090	GASKET	1							
34	2	129508-18080	GASKET	1							
35	2	24316-000160	O-RING, 4DP16.0	1							
36	1	129400-92420	HONE	1							1
37	1	977770-1207F	GASKET.LIQUID	1							1

Remarks
(1) OPTIONAL PARTS.

N:Old ←Yes/No→ New. Q:Old ←No/Yes→ New. R:Old ←Yes/Yes→ New. S:Old ←No/No→ New. W:Add. Z:Discontinued. F:Interchangeable by set. K:Q'ty Change

Copyright (C) YANMAR CO., LTD. All RightsReserved.

Parts No. Index

Parts No.	Fig. No.	Ref. No.
105025-59560	16	6
114250-39450	11	8
114250-53080	15	5
114250-53120	15	9
114250-53130	15	10
114250-53140	15	11
114250-53210	15	12
114250-53400	15	13
118400-44670	12	47
118400-44720	12	45
119005-12571	5	14
119131-18320	6	3
119225-52102	16	10
119255-44660	12	50
119305-59120	15	25
119609-32040	2	17
	19	23
119620-01750	3	2
119620-77380	18	4
119620-77421	18	8
119620-77440	18	13
119620-77461	18	15
119620-77471	18	16
119620-77480	18	20
119620-77490	18	29
119620-79200	18	9
119620-79210	18	10
119620-79220	18	11
119620-79230	18	12
119620-79240	18	5
119620-79250	18	6
119620-79260	18	18
119620-79270	18	19
119620-79280	18	21
119620-79290	18	22
119620-79300	18	23
119620-79310	18	24
119620-79320	18	25
119620-79330	18	26
119620-79340	18	27
119620-79350	18	28
119620-79360	18	7
		30
119625-11880	4	27
	19	6
119640-01640	3	9
119643-66900	18	40
119650-77910	18	37
119653-77950	14	101
119660-61901	14	59

Parts No.	Fig. No.	Ref. No.
119717-11190	4	24
119717-11340	4	18
	19	4
119717-11350	4	19
	19	10
119717-11800	4	11
119773-91501	12	57
119802-01520	2	12
119802-01561	2	13
119802-03070	4	51
119802-11870	4	46
	19	5
119802-13650	6	4
119802-13670	6	5
119802-13820	6	6 -1
119802-21202	9	5
119802-21660	9	9
119802-25051	7	9
119802-25071	7	13
119802-25101	7	10
119802-25901	7	15
119802-32070	2	8
119802-32100	2	7
119802-32130	2	20
119802-35110	10	10
119802-39500	11	18
119802-49113	12	10
119802-49730	12	32
119802-51090	13	89
119802-51560	13	52
119802-51590	13	58
119802-51600	13	59
119802-51680	13	63
119802-51690	13	64
119802-55700	16	11
119802-55710	16	12
119802-55810	16	2
119807-61420	14	22
119808-12540	5	17
119831-42290	12	21
119940-59130	10	23
119940-77270	18	34
119940-77330	18	1
121023-01551	2	28
121111-21501	9	12
121250-44901	12	41
121252-39150	11	16
121267-44760	12	37
121450-42450	12	42
121520-34810	10	2

Parts No.	Fig. No.	Ref. No.
121550-23200	9	30
121850-21680	9	11
121850-42410	12	8
121850-51960	2	21
	19	3
123901-39820	11	22
123907-11550	4	3
123907-11601	15	43
123907-11830	4	23
123907-59540	15	45
123907-59550	15	42
	19	30
123907-59560	15	46
124060-01050	1	10
124070-13300	11	20
124160-01751	2	14
	4	48
124160-01910	1	5
		15
124160-11360	4	59
124160-39140	11	9
124223-39900	11	19
124240-01871	2	15
124240-01883	19	27
124250-49351	12	58
124395-49840	12	17
	19	15
124465-44950	12	40
	19	31
124550-21600	9	16
124722-59050	12	33
		36
	15	39
124766-59050	16	5
		8
129001-01250	1	11
129001-02931	1	25
129001-32330	2	11
129001-91841	2	22
129004-01190	1	33
129004-22500	9	19
129004-22950	9	35
129004-34802	10	1
129004-42040	12	15
129004-49610	12	30
129004-49620	12	34
129004-49711	12	31
129004-49721	12	35
129004-55612	16	1
129005-59830	11	12

Parts No.	Fig. No.	Ref. No.
129006-03120	4	53
129006-35100	10	9
129006-44480	10	15
129062-12560	5	15
129100-01580	3	1
		15
	9	2
129100-01640	3	16
129100-23910	9	29
129100-42051	12	3
129100-42121	12	4
129100-55690	16	13
129103-49301	10	16
129107-44590	12	46
129120-77502	5	9
129129-77230	17	8
129129-77240	17	9
129129-77260	17	21
129129-77270	17	22
129129-77320	17	28
129129-77340	17	30
129129-77350	17	31
129129-77362	17	32
129129-77380	17	34
129129-77400	17	16
129129-77410	17	17
129129-77420	17	19
129129-77430	17	20
129129-77440	17	14
129129-77450	17	15
129129-77460	17	3
129150-01200	1	31
129150-02020	1	7
129150-02450	7	4
129150-02871	1	34
129150-02931	1	28
129150-02941	1	37
129150-03070	4	52
129150-03090	4	64
129150-11230	4	36
		40
129150-11750	4	22
		37
		41
129150-14101	7	7
129150-14200	7	1
129150-14400	7	2
129150-23601	9	31
129150-23611	9	39
129150-25301	7	16

Parts No. Index

Parts No.	Fig. No.	Ref. No.
129150-35042	10	3
	19	11
129150-35111	10	13
	19	22
129150-35170	10	14
129150-49811	12	25
	19	14
129150-59131	15	28
		32
129150-77511	5	10
	19	8
129155-42350	12	20
129155-49801	12	24
129155-51280	14	5
129155-61460	14	24
129188-08100	1	40
129202-22300	9	23
129210-59110	16	4
129210-59160	16	7
129211-77920	18	36
129240-79300	18	14
129246-61061	14	52
129246-61441	14	23
129255-61410	14	21
129350-49530	12	26
129400-01730	3	6
129400-01770	3	8
129400-92420	19	36
129403-13120	6	2
129407-77010	17	1
129407-77210	17	6
129407-77220	17	7
129407-77250	17	10
129407-77280	17	23
129407-77290	17	24
129407-77300	17	25
129407-77310	17	27
129407-77330	17	29
129407-77390	17	13
129417-33110	10	8
129417-35150	10	11
129418-12530	5	18
129418-18320	8	2
129418-32320	2	10
129423-77200	18	2
129423-77710	18	17
129436-35070	10	4 -1
129436-35091	10	4
129457-12530	5	16
129486-01670	3	19

Parts No.	Fig. No.	Ref. No.
129486-42021	12	14
	19	12
129486-42140	12	16
	19	20
129508-01330	1	32
	19	2
129508-03010	4	50
129508-11100	4	25
129508-11110	4	15
129508-11130	4	16
129508-11180	4	17
129508-11241	4	28
129508-11250	4	29
129508-11260	4	31
129508-11270	4	32
129508-11280	4	33
129508-11310	4	56
	19	7
129508-11350	4	49
129508-11650	4	34
129508-11660	4	38
129508-11700	4	4
129508-11820	4	12
129508-11900	4	62
129508-11920	4	42
129508-12060	5	1
129508-12080	5	12
129508-12100	5	2
129508-12110	5	4
	19	21
129508-12560	5	20
129508-14580	7	3
129508-18020	8	4
129508-18080	8	1
	19	34
129508-18090	8	5
	19	33
129508-21002	9	1
129508-22080	9	17
129508-22900	9	33
129508-32111	2	18
129508-32120	2	19
129508-33010	10	6
129508-33050	10	7
129508-39450	11	17
129508-39600	11	21
129508-42001	12	1
129508-44501	12	43
129508-44550	12	44
129508-49020	12	53

Parts No.	Fig. No.	Ref. No.
129508-49030	10	17
129508-49040	10	21
129508-59510	15	40
129508-59550	15	41
129508-59570	15	38
129508-59910	15	34
129508-59920	15	35
129508-59930	15	36
129508-59940	15	37
129550-13110	6	1
	19	9
129550-59120	15	29
129553-39650	11	7
129601-44560	12	51
129601-44600	12	48
129601-51250	13	132
129602-49010	12	52
129612-12650	5	19
129612-44700	12	22
129612-59520	16	9
129649-53000	15	2
129672-11510	4	20
129688-01780	3	8 -1
129693-44310	6	6
129792-39410	11	1
129795-01780	3	18
129795-01800	2	6
129795-01900	18	31
129795-01950	2	16
129795-02412	1	14
129795-21661	9	10
129795-49551	12	27
	19	13
129900-07900	4	1
129900-32130	2	9
129907-11950	4	47
129915-12500	5	13
129915-39600	12	56
129916-49740	12	13
129916-59020	13	130
129972-77341	18	35
158552-51151	7	18
158552-51570	13	53
		54
158552-51580	13	57
158552-51600	13	67
158552-51670	13	4
158552-51781	13	123
158552-52100	13	79
158552-52310	13	81

Parts No.	Fig. No.	Ref. No.
158552-52400	13	93
158552-52500	13	80
158552-61900	14	82
158553-51551	13	50
158553-51630	13	68
158553-51640	13	70
158553-51660	13	72
158553-51670	13	62
158553-51680	13	73
158553-51770	13	97
158553-61050	14	2
158553-61070	14	3
158557-51570	13	55
158560-51300	13	38
158563-51281	13	36
		37
158563-51330	13	46
158600-51270	13	35
158601-51340	13	47
158601-51550	13	51
158601-51570	13	56
158601-51650	13	71
158601-51770	13	122
158601-51790	13	124
171002-66830	14	60
171008-03990	10	18
171051-01921	1	6
171056-49120	10	26
171420-01600	3	5
171420-21590	9	13
22190-080002	11	10
		13
	15	44
	19	16
22190-100002	11	11
	19	24
22190-120000	14	63
22190-120002	13	82
		83
		125
22190-180002	13	84
		126
22190-220002	3	11
	19	26
22217-140000	7	19
	13	85
22252-000260	9	24
22312-050140	13	86
22351-030010	9	8
	11	26

Parts No. Index

Parts No.	Fig. No.	Ref. No.
22351-050010	13	87
22351-060012	4	63
22512-070140	7	8
	9	6
22857-500100	4	57
23000-025000	11	23
23000-048000	5	5
23000-060000	5	6
23010-038000	12	54
23010-044000	12	55
23080-015000	10	20
		24
23080-018000	10	25
23414-080000	12	29
	19	25
23414-100000	11	27
	19	29
23857-030000	11	14
23857-060000	13	90
23876-010000	12	11
23876-020000	4	13
	12	12
23876-030000	2	4
23876-040000	2	5
23887-120002	13	127
	14	65
24311-000070	13	92
24311-000120	4	60
		72
	19	17
24311-000160	16	15
24311-000320	2	23
	4	61
	19	18
24316-000160	11	24
	19	35
24321-000650	16	14
24321-000800	19	28
24341-000240	2	29
	19	19
24341-000400	4	58
	19	32
24356-010180	13	94
24356-010200	13	65
		95
24372-000150	13	66
26014-060122	12	49
26106-060102	13	96
	14	53
		67

Parts No.	Fig. No.	Ref. No.
26106-060142	14	83
		84
26106-060162	2	30
	11	25
26106-060202	14	85
26106-060302	12	38
26106-080122	11	15
	12	23
26106-080142	7	17
26106-080162	2	24
		25
	3	12
	4	2
	12	18
	13	133
26106-080202	5	7
	10	12
	13	134
26106-080222	12	28
26106-080252	3	13
	4	44
26106-080302	16	3
26106-080352	3	20
	5	11
	10	5
26106-080402	7	14
26106-080452	3	14
		14 -1
	12	39
	18	33
26106-080502	3	22
	4	45
26106-080552	2	26
	10	5 -1
26106-080602	12	19
26106-080802	5	8
26116-120252	17	35
26206-100252	3	3
26206-100302	3	4
26226-080352	4	43
26306-080002	2	27
	8	3
26306-100002	18	32
26366-060002	11	28
26450-080452	13	101
26756-060002	14	68
26776-140002	7	20
	13	102
27241-120000	1	12
27241-300000	1	13

Parts No.	Fig. No.	Ref. No.
27241-400000	4	14
729402-23100	9	25
729508-01500	2	1
729508-01560	1	1
729508-92780	19	1
729649-51390	13	1
729649-53100	15	1
977770-1207F	2	31
	3	21
	4	65
	19	37
X0280210230	17	11
X0283060061	17	2
X0283270140	17	12
X9490561001	18	3
X9490561370	17	4
X9491200240	17	5
X9491703371	17	18
X9491730461	17	26

Parts No.	Fig. No.	Ref. No.