YANMAR

PARTS CATALOG

0CV10-M91700EN

Last update Feb., 2013

PREFACE

1.This Parts Catalog carries all parts incorporated in YANMAR Model 4TNV84T-KLAN engine manufactured since January, 2004.

2.Each illustration corresponds to the parts list on the followingpage.

3.When ordering parts,clearly write down the engine model and serial number,as well as the name and number of each part in your order sheet. This will help insure reliable delivery of the parts youhave ordered.

Directions for the Parts Catalog.

1.The parts stipulated in this Parts Catalog are not necessarily standard equipped parts.
2.Parts may change without prior notice.
3.The following is an example of the Parts Catalog format.

0CF10-G21601 29. FUEL INJECTION PUMP(W/BOOST)

(A)=4JH-DT
(B)=4JH-DTZ
(C)=4JH-DTZP
(D)=4JH-DTZA
(E)=4JH-DTZY
(F)=

① REF.	② LEV.	PARTS NO.	DESCRIPTION	Q'TY (A)	(B)	(C)	(D)	(E)	(F)	③ I	⑤ R
1	1	729595-51390	FUEL INJECTION PUMP	1	1	1	1	1			1
1-1	1	729595-51391	FUEL INJECTION PUMP	1	1	1	1	1		N	1
	(A=E00185)	(B=E00200)									
3	2	26022-060162	SCREW M 6X 16	9	9	9	9	9			
3-1 ④	2	26022-060162	SCREW M 6X 16	4	4	4	4	4		K	
	(A=E00156)	(B=E00156)	(C=E00156) (D=E00156)	(E=E00156)							
4	2	129470-51040	CAMSHAFT	1	1	1	1	1			
5	2	122710-51050	BEARING, ROLLER	2	2	2	2	2			
6	2	129470-51060	RETAINER	1	1	1	1	1			

Remarks
(1) BOOST COMPEMSATOR TYPE. OPTIONAL
PART, TO E00155,(4JH-DT, 4JH-DTZ

① Ref. No.

The Ref. No. listed may not be in accordance with the illustration Ref. No.

(Ex.) Illustration No. 1 List Ref No. 1 (Before change) → 1- 1 (After change)

For interchangeable symbols N, R and K, illustrations for new parts may be abbreviated.

② Lev. (Level)

Level indication
The numbers below indicate the level of relativity towards the main part.
1 ----- Main parts (Assembly parts)
2 ----- Sub component included in " 1 ".
3 ----- Sub component included in " 2 ".
Note) Parts that are not for sale are partially illustrated but not listed.

③ Interchangeability Mark

When a part change takes place, one of the following interchangeability symbols is indicated beside the part.

Symbol	Interchangeability	Contents note
N	Old ← Yes / No → New	New Part is interchangeable for Old Part but Old Part is not interchangeable for New Part.
Q	Old ← No / Yes → New	New Part is not interchangeable for Old Part but Old Part is interchangeable for New Part.
R	Old ← Yes / Yes → New	New/ Old Parts are both interchangeable.
S	Old ← No / No → New	New/ Old Parts are both not interchangeable.
W		Part newly added.
Z		Part discontinued.
F		Not interchangeable by a single part but interchangeable together with related parts.
K		Changes only for used parts quantities.

④ Effective Machine No.

When a part changes, the effective Machine No. will be indicated in the (A)-(F) column.

Product Symbol	Product No.	Product Symbol	Product No.
C	Clutch No. Compressor No.	F	Machine No. (Agricultural Equip.)
D	Drive No.	M	Machine No.
E	Engine No.		

Note 1) A date may follow the symbol. (Ex.) 1996.01
Note 2) " XXXXX " and " ZZZZZ " are for parts that could not be predicted or for engine models that could not be identified.
Note 3) (A=E00185) is the E (Engine Serial Number) for the column (A) model (in this case 4JH-DT) after the parts design change.

⑤ Remarks Mark

Figures or alphabets (symbols) are entered in the remarks column.
The comments (remarks) on parts that are indicated at the bottom of the illustration are the same symbols as those stated above.

Contents

Fig. No.	Fig. Name
ENGINE (4TNV84T-KLAN)	
1.	CYLINDER BLOCK
2.	GEAR HOUSING
3.	MOUNTING FLANGE & OIL SUMP
4.	CYLINDER HEAD & BONNET
5.	SUCTION MANIFOLD
6.	EXHAUST MANIFOLD
7.	CAMSHAFT & DRIVING GEAR
8.	TURBINE
9.	CRANKSHAFT & PISTON
10.	BALANCER
11.	LUB. OIL SYSTEM
12.	LUB. OIL LINE
13.	COOLING WATER SYSTEM
14.	FUEL INJECTION PUMP
15.	FUEL INJECTION VALVE
16.	FUEL LINE
17.	STARTING MOTOR
18.	GENERATOR
19.	GASKET SET

Fig. No.	Fig. Name

0CV10-M91700

Fig.1. CYLINDER BLOCK

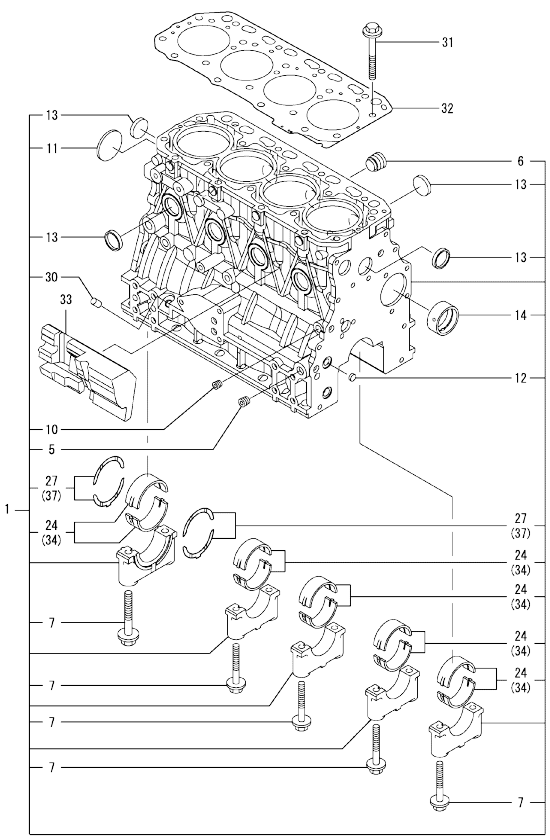

(A)=4TNV84T-KLAN (D)=
(B)= (E)=
(C)= (F)=

No.	Lev.	Parts No.	Description	Q'ty (A)	(B)	(C)	(D)	(E)	(F)	I	R
1	1	729564-01560	BLOCK ASSY, CYLINDER	1							
5	2	124160-01910	PLUG, PT1/4	2							
6	2	171051-01921	PLUG, NPTF1	1							
7	2	129150-02020	BOLT, METAL CAP	10							
10	2	124060-01050	PLUG, PT1/8	1							
11	2	129001-01250	PLUG, 50	1							
12	2	27241-120000	PLUG, 12	2							
13	2	27241-300000	PLUG 30	8							
14	2	129795-02411	BUSH, CAMSHAFT	1							
24	2	129001-02930	BEARING, MAIN	5							3
27	2	129150-02930	BEARING, THRUST	2							
30	2	119309-01810	PLUG	1							
31	1	129150-01200	BOLT, HEAD	18							
32	1	129508-01330	GASKET, HEAD	1							
33	1	129004-01190	SPACER	1							
34	1	129150-02870	BEARING, 0.25 US	5							1
37	1	129150-02940	BEARING, THRUST 0.25	1							2

Remarks
(1) UNDER-SIZE(U.S=0.25)PART.
(2) OVER-SIZE(O.S=0.25)PART.
(3) REPAIR PART.

N:Old $\frac{\text{Yes}}{\text{No}}$ New. Q:Old $\frac{\text{No}}{\text{Yes}}$ New. R:Old $\frac{\text{Yes}}{\text{Yes}}$ New. S:Old $\frac{\text{No}}{\text{No}}$ New. W:Add. Z:Discontinued. F:Interchangeable by set. K:Q'ty Change

Copyright (C) YANMAR CO., LTD. All RightsReserved.

0CV10-M91700

Fig.2. GEAR HOUSING

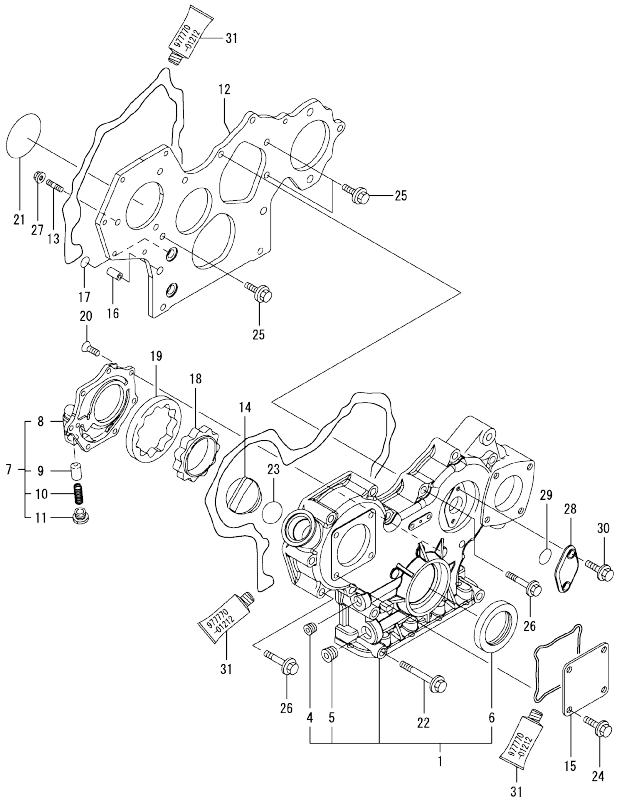

(A)=4TNV84T-KLAN (D)=
(B)= (E)=
(C)= (F)=

No.	Lev.	Parts No.	Description	Q'ty (A)	(B)	(C)	(D)	(E)	(F)	I	R
1	1	729508-01520	CASE ASSY, GEAR	1							
4	2	23876-030000	PLUG, R03	1							
5	2	23876-040000	PLUG, R04	1							
6	2	129795-01800	SEAL, OIL	1							
7	1	119802-32100	COVER ASSY	1							
8	2	119802-32070	COVER	1							
9	2	129900-32130	VALVE, RELIEF	1							
10	2	129418-32320	SPRING	1							
11	2	129001-32330	PLUG	1							
12	1	129005-01520	FLANGE, GEAR CASE	1							
13	1	119802-01560	STUD, M8X25	3							
14	1	124160-01751	COVER, FILLER	1							
15	1	124240-01871	COVER	1							
16	1	129795-01950	PIPE, KNOCK L=18	2							
17	1	119609-32040	O-RING, P16	4							
18	1	129508-32111	ROTOR, INNER	1							
19	1	129508-32120	ROTOR, OUTER	1							
20	1	119802-32130	SCREW, M6X16	7							
21	1	121850-51960	O-RING	1							
22	1	129001-91841	BOLT, M8X85	3							
23	1	24311-000320	O-RING, 1AP32.0	1							
24	1	26106-080162	BOLT, M8X 16 PLATED	4							
25	1	26106-080162	BOLT, M8X 16 PLATED	3							
26	1	26106-080552	BOLT, M8X 55 PLATED	11							
27	1	26306-080002	NUT, M8	3							
28	1	121023-01550	COVER	1							
29	1	24341-000240	O-RING, 1AS24.0	1							
30	1	26106-060162	BOLT, M6X 16 PLATED	2							
31	1	977770-01212	GASKET, LIQUID	1							1

Remarks
(1) OPTIONAL PART.

N:Old $\frac{\text{Yes}}{\text{No}}$ New. Q:Old $\frac{\text{No}}{\text{Yes}}$ New. R:Old $\frac{\text{Yes}}{\text{Yes}}$ New. S:Old $\frac{\text{No}}{\text{No}}$ New. W:Add. Z:Discontinued. F:Interchangeable by set. K:Q'ty Change

Copyright (C) YANMAR CO., LTD. All RightsReserved.

0CV10-M91700

Fig.3. MOUNTING FLANGE & OIL SUMP

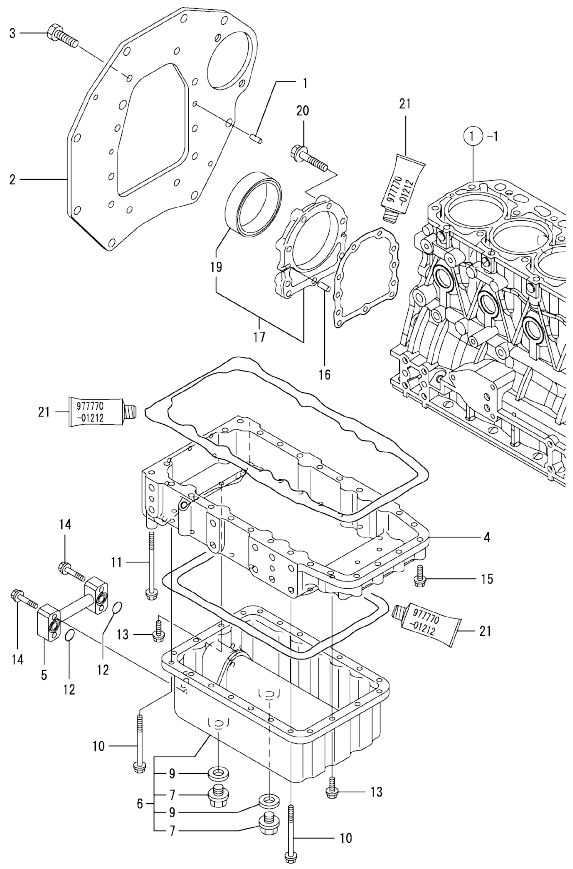

(A)=4TNV84T-KLAN (D)=
(B)= (E)=
(C)= (F)=

No.	Lev.	Parts No.	Description	Q'ty (A)	(B)	(C)	(D)	(E)	(F)	I	R
1	1	129100-01580	PIN, M8X16	2							
2	1	129051-01600	FLANGE, MOUNTING	1							
3	1	26206-100202	BOLT, M10X 20 PLATED	8							
4	1	129457-01700	SPACER, OIL SUMP	1							
5	1	129051-01721	JOINT	1							
6	1	129457-01780	SUMP ASSY, OIL	1							
7	2	105425-01690	PLUG, 16	2							
9	2	22190-160002	WASHER, SEAL 16	2							
10	1	129001-91870	BOLT, M8X100	14							
11	1	129001-91910	BOLT, M8X120	4							
12	1	24311-000180	O-RING, 1AP18.0	2							
13	1	26106-080252	BOLT, M8X 25 PLATED	8							
14	1	26106-080402	BOLT, M8X 40 PLATED	4							
15	1	26106-080502	BOLT, M8X 50 PLATED	8							
16	1	129100-01580	PIN, M8X16	2							
17	1	129100-01640	CASE ASSY, OIL SEAL	1							
19	2	129795-01780	SEAL, OIL	1							
20	1	129486-01670	BOLT, M8X30	9							
21	1	977770-01212	GASKET, LIQUID	1							1

Remarks
(1) OPTIONAL PART.

N:Old $\frac{\text{Yes}}{\text{No}}$ New. Q:Old $\frac{\text{No}}{\text{Yes}}$ New. R:Old $\frac{\text{Yes}}{\text{Yes}}$ New. S:Old $\frac{\text{No}}{\text{No}}$ New. W:Add. Z:Discontinued. F:Interchangeable by set. K:Q'ty Change

Copyright (C) YANMAR CO., LTD. All RightsReserved.

0CV10-M91700

Fig.4. CYLINDER HEAD & BONNET

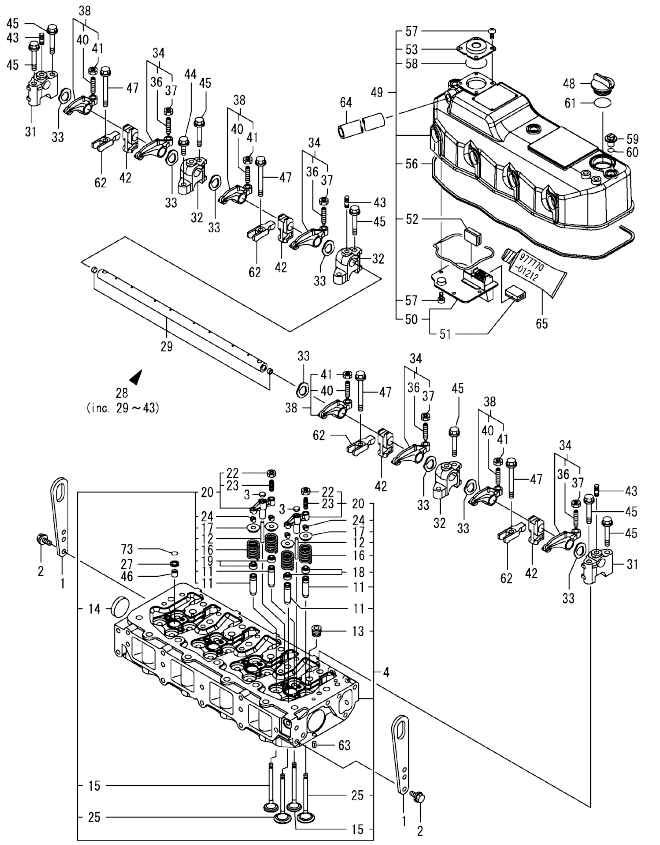

Remarks
(1) REPAIR PART.
(2) OPTIONAL PART.

(A)=4TNV84T-KLAN (D)=
(B)= (E)=
(C)= (F)=

No.	Lev.	Parts No.	Description	Q'ty (A)	(B)	(C)	(D)	(E)	(F)	I	R
1	1	129900-07900	LIFTER	2							
2	1	26106-080142	BOLT, M8X 14 PLATED	4							
3	1	129508-11840	SEAT, VALVE BRIDGE	8							
4	1	129508-11700	HEAD ASSY, CYLINDER	1							
11	2	119717-11800	GUIDE, VALVE	16							1
12	2	129508-11820	GUIDE	8							
13	2	23876-020000	PLUG, R02	4							
14	2	27241-400000	PLUG, 40	2							
15	2	129508-11110	VALVE, EXHAUST	8							
16	2	129508-11130	SPRING, VALVE	16							
17	2	129508-11180	RETAINER, SPRING	16							
18	2	119717-11340	SEAL, VALVE STEM	8							
19	2	119717-11350	SEAL, VALVE STEM	8							
20	2	129508-11800	BRIDGE ASSY, VALVE	8							
22	3	129150-11750	NUT, M8	8							
23	3	123907-11830	ADJUSTER	8							
24	2	119717-11190	COTTER	32							
25	2	129508-11100	VALVE, INTAKE	8							
27	1	119625-11880	SEAT, NOZZLE	4							
28	1	129508-11241	SHAFT ASSY, ROCKER	1							
29	2	129508-11250	SHAFT, ROCKER ARM	1							
31	2	129508-11260	SUPPORT, ROCKER ARM	2							
32	2	129508-11270	SUPPORT, ROCKER ARM	3							
33	2	129508-11280	WASHER	8							
34	2	129508-11650	ARM, ROCKER	4							
36	3	129150-11230	SCREW, VALVE ADJUST	4							
37	3	129150-11750	NUT, M8	4							
38	2	129508-11660	ARM, ROCKER	4							
40	3	129150-11230	SCREW, VALVE ADJUST	4							
41	3	129150-11750	NUT, M8	4							
42	2	129508-11920	RETAINER	4							
43	2	26226-080352	STUD, M8X 35	3							
44	1	26106-080252	BOLT, M8X 25 PLATED	3							
45	1	26106-080502	BOLT, M8X 50 PLATED	7							
46	1	119802-11870	PROTECTOR, NOZZLE	4							
47	1	129907-11950	BOLT, M8X75	4							
48	1	124160-01751	COVER, FILLER	1							
49	1	129508-11350	BONNET ASSY, HEAD	1							
50	2	129508-03010	PLATE	1							
51	3	119802-03070	BAFFLE, BREATHER	1							
52	2	129150-03070	BAFFLE, BREATHER	1							
53	2	129006-03120	COVER, DIAPHRAGM	1							
56	2	129508-11310	GASKET, BONNET	1							
57	2	22857-500100	SCREW, 5X10	8							
58	2	24341-000400	O-RING, 1AS40.0	1							
59	1	124160-11360	KNOB	3							
60	1	24311-000120	O-RING, 1AP12.0	3							
61	1	24311-000320	O-RING, 1AP32.0	1							
62	1	129508-11900	RETAINER, NOZZLE	4							
63	1	22351-060012	PIN, SPRING 6.0X12	2							
64	1	129150-03090	HOSE, ID16X2T	1							

N:Old ←Yes/No→ New. Q:Old ←No/Yes→ New. R:Old ←Yes/Yes→ New. S:Old ←No/No→ New. W:Add. Z:Discontinued. F:Interchangeable by set. K:Q'ty Change

++ CONTINUE ++

Copyright (C) YANMAR CO., LTD. All RightsReserved.

0CV10-M91700

Fig.4. CYLINDER HEAD & BONNET

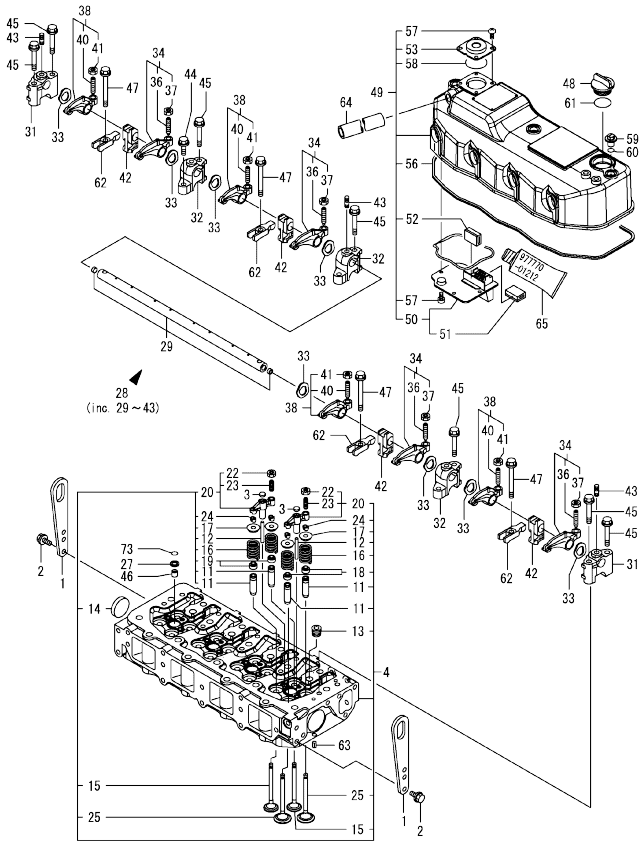

(A)=4TNV84T-KLAN
(B)=
(C)=
(D)=
(E)=
(F)=

No.	Lev.	Parts No.	Description	Q'ty (A)	(B)	(C)	(D)	(E)	(F)	I	R
65	1	977770-01212	GASKET, LIQUID	1							2
73	1	24311-000120	O-RING, 1AP12.0	4							

Remarks
(1) REPAIR PART.
(2) OPTIONAL PART.

N:Old ←Yes/No→ New. Q:Old ←No/Yes→ New. R:Old ←Yes/Yes→ New. S:Old ←No/No→ New. W:Add. Z:Discontinued. F:Interchangeable by set. K:Q'ty Change

Copyright (C) YANMAR CO., LTD. All RightsReserved.

0CV10-M91700

Fig.5. SUCTION MANIFOLD

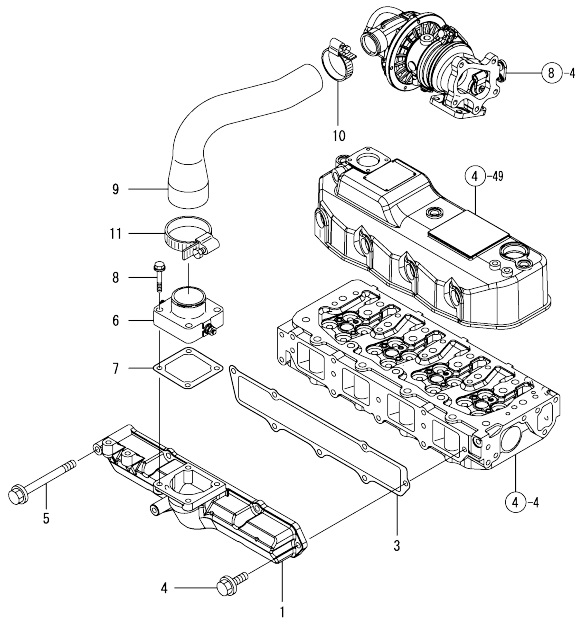

(A)=4TNV84T-KLAN (D)=
(B)= (E)=
(C)= (F)=

No.	Lev.	Parts No.	Description	Q'ty (A)	(B)	(C)	(D)	(E)	(F)	I	R
1	1	129508-12120	MANIFOLD, AIR INTAKE	1							
1-1	1	129508-12121	MANIFOLD,INTAKE	1							R
	(A=EZZZZZ)										
3	1	129508-12110	GASKET, MANIFOLD	1							
4	1	26106-080202	BOLT, M8X 20 PLATED	6							
5	1	26106-080802	BOLT, M8X 80 PLATED	1							
6	1	129120-77501	HEATER	1							
7	1	129150-77511	GASKET	1							
8	1	26106-080352	BOLT, M8X 35 PLATED	4							
9	1	129564-12080	PIPE, AIR INTAKE	1							
10	1	23000-048000	CLAMP, 48	1							
11	1	23000-060000	CLAMP, 60	1							

N:Old ←Yes/No→ New. Q:Old ←No/Yes→ New. R:Old ←Yes/Yes→ New. S:Old ←No/No→ New. W:Add. Z:Discontinued. F:Interchangeable by set. K:Q'ty Change

Copyright (C) YANMAR CO., LTD. All RightsReserved.

0CV10-M91700

Fig.6. EXHAUST MANIFOLD

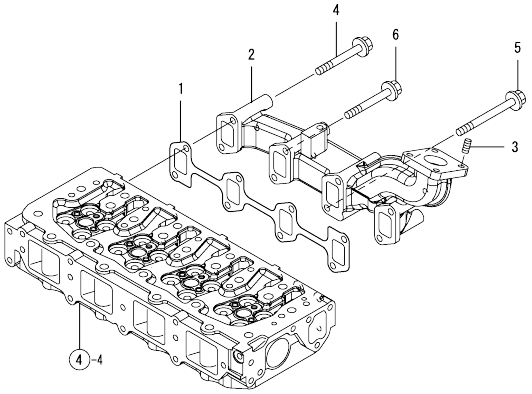

(A)=4TNV84T-KLAN (D)=
(B)= (E)=
(C)= (F)=

No.	Lev.	Parts No.	Description	Q'ty (A)	(B)	(C)	(D)	(E)	(F)	I	R
1	1	129550-13110	GASKET	1							
2	1	129564-13110	MANIFOLD, EXHAUST	1							
3	1	119131-18320	STUD, M8X22	4							
4	1	119802-13650	BOLT, M8X65	3							
5	1	119802-13670	BOLT, M8X85	1							
6	1	129693-44310	BOLT	4							
6-1	1	119802-13820	BOLT, M8X100 9.8T	4						N	
	(A=*2009.12)										

N:Old ←Yes/No→ New. Q:Old ←No/Yes→ New, R:Old ←Yes/Yes→ New. S:Old ←No/No→ New. W:Add. Z:Discontinued. F:Interchangeable by set. K:Q'ty Change

Copyright (C) YANMAR CO., LTD. All RightsReserved.

0CV10-M91700

Fig.7. CAMSHAFT & DRIVING GEAR

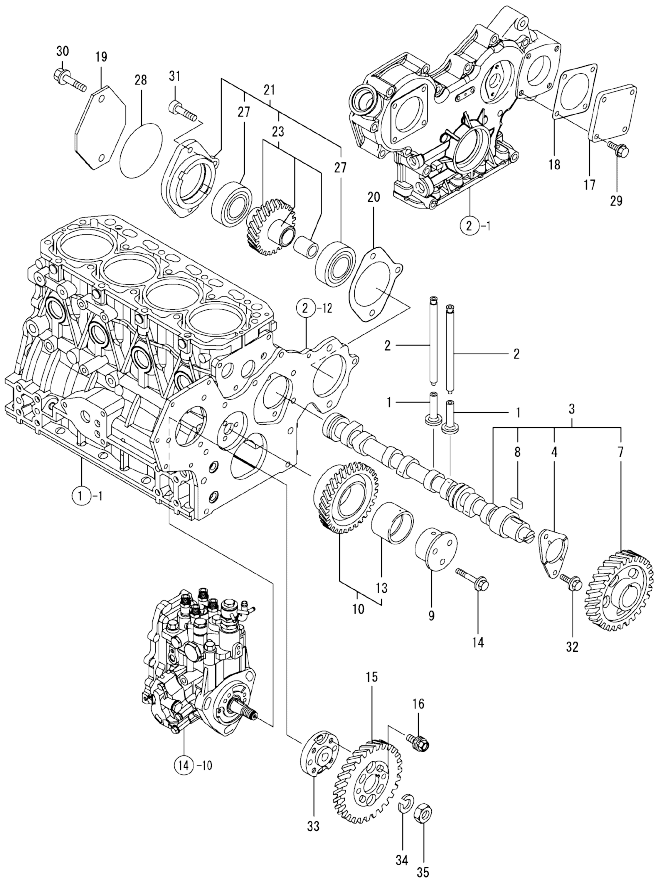

(A)=4TNV84T-KLAN (D)=
(B)= (E)=
(C)= (F)=

No.	Lev.	Parts No.	Description	Q'ty (A)	(B)	(C)	(D)	(E)	(F)	I	R
1	1	129150-14200	TAPPET	8							
2	1	129150-14400	ROD, PUSH L=178	8							
3	1	129508-14580	CAMSHAFT ASSY	1							
4	2	129150-02450	BEARING, THRUST	1							
7	2	129150-14101	GEAR, CAMSHAFT	1							
8	2	22512-070140	KEY, 7X 14	1							
9	1	119802-25051	SHAFT, IDLE	1							
10	1	119802-25100	GEAR ASSY, IDLE	1							
13	2	119802-25070	BUSH, IDLE GEAR	1							1
14	1	26106-080402	BOLT, M8X 40 PLATED	3							
15	1	119802-25901	GEAR, PUMP	1							
16	1	129150-25301	BOLT	4							
17	1	124240-01871	COVER	1							
18	1	124240-01883	GASKET	1							
19	1	121023-26070	COVER	1							
20	1	171353-26081	GASKET	1							
21	1	129051-26200	DRIVE ASSY, PUMP	1							
23	2	129051-26210	GEAR ASSY, PUMP	1							
27	2	24105-060064	BEARING, BALL 6006Z	2							
28	1	24321-000850	O-RING, 1AG85.0	1							
29	1	26106-080162	BOLT, M8X 16 PLATED	4							
30	1	26106-100452	BOLT, M10X 45 PLATED	2							
31	1	26450-080282	BOLT, M8X 28	1							
32	1	26106-080142	BOLT, M8X 14 PLATED	2							
33	1	158552-51151	FLANGE	1							
34	1	22217-140000	WASHER, SPRING 14	1							
35	1	26776-140002	NUT, LOCK M14	1							

Remarks
(1) REPAIR PART.

N:Old ←Yes/No→ New. Q:Old ←No/Yes→ New. R:Old ←Yes/Yes→ New. S:Old ←No/No→ New. W:Add. Z:Discontinued. F:Interchangeable by set. K:Q'ty Change

Copyright (C) YANMAR CO., LTD. All RightsReserved.

0CV10-M91700

Fig.8. TURBINE

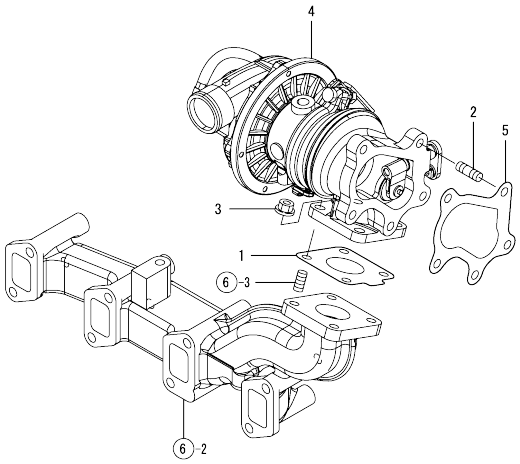

(A)=4TNV84T-KLAN (D)=
(B)= (E)=
(C)= (F)=

No.	Lev.	Parts No.	Description	Q'ty (A)	(B)	(C)	(D)	(E)	(F)	I	R
1	1	129508-18080	GASKET	1							
2	1	129418-18320	STUD, M8X20	5							
3	1	26306-080002	NUT, M8	5							
4	1	129508-18010	TURBINE, RHF4	1							
5	1	129508-18090	GASKET	1							

N:Old ←Yes/No→ New. Q:Old ←No/Yes→ New, R:Old ←Yes/Yes→ New. S:Old ←No/No→ New. W:Add. Z:Discontinued. F:Interchangeable by set. K:Q'ty Change

Copyright (C) YANMAR CO., LTD. All RightsReserved.

0CV10-M91700

Fig.9. CRANKSHAFT & PISTON

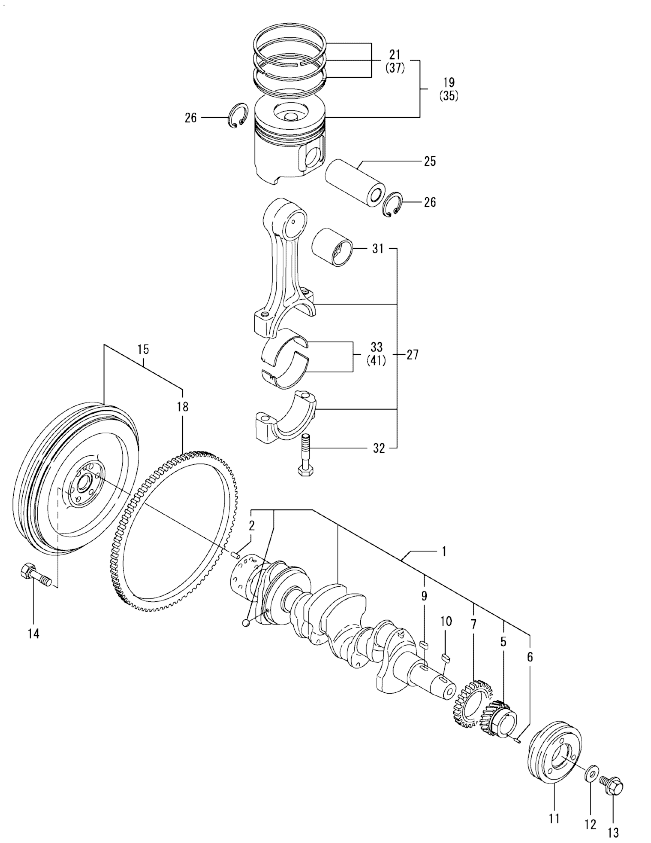

(A)=4TNV84T-KLAN (D)=
(B)= (E)=
(C)= (F)=

No.	Lev.	Parts No.	Description	Q'ty (A)	(B)	(C)	(D)	(E)	(F)	I	R
1	1	129564-21001	CRANKSHAFT ASSY	1							
2	2	129100-01580	PIN, M8X16	1							
5	2	119802-21201	GEAR, CRANKSHAFT	1							
6	2	121850-21290	PIN	1							
7	2	129400-28121	GEAR, BALANCER	1							
9	2	22512-070140	KEY, 7X 14	1							
10	1	22512-070140	KEY, 7X 14	1							
11	1	129457-21650	V-PULLEY	1							
12	1	129795-21661	WASHER	1							
13	1	121850-21680	BOLT	1							
14	1	121111-21501	BOLT, FLYWHEEL	6							
15	1	129457-21560	FLYWHEEL ASSY	1							
18	2	119865-21600	GEAR, RING	1							
19	1	129508-22080	PISTON ASSY	4							
21	2	129004-22500	RING SET, PISTON	4							
25	1	129202-22300	PIN, PISTON D26 L70	4							
26	1	22252-000260	RING, 26	8							
27	1	729402-23100	ROD ASSY, CONNECTING	4							
31	2	129100-23910	BEARING, PISTON PIN	4							1
32	2	121550-23200	BOLT, CONNECTING ROD	8							
33	2	129150-23600	BEARING, CRANK PIN	4							
35	1	129508-22900	PISTON ASSY, 0.25 OS	4							2
37	2	129004-22950	RING SET, 0.25 OS	4							2
41	1	129150-23610	BEARING, 0.25 US	4							3

Remarks
(1) REPAIR PART.
(2) OVER-SIZE(O.S=0.25)PART.
(3) UNDER-SIZE(U.S=0.25)PART.

N:Old ←Yes/No→ New. Q:Old ←No/Yes→ New. R:Old ←Yes/Yes→ New. S:Old ←No/No→ New. W:Add. Z:Discontinued. F:Interchangeable by set. K:Q'ty Change

Copyright (C) YANMAR CO., LTD. All RightsReserved.

0CV10-M91700

Fig.10. BALANCER

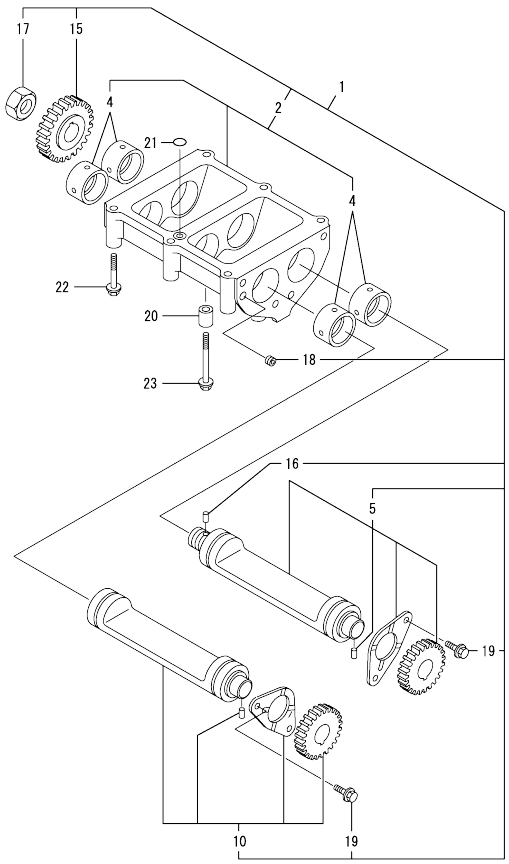

(A)=4TNV84T-KLAN (D)=
(B)= (E)=
(C)= (F)=

No.	Lev.	Parts No.	Description	Q'ty (A)	(B)	(C)	(D)	(E)	(F)	I	R
1	1	129457-28000	BALANCER ASSY	1							
2	2	129457-28011	CASE ASSY, BALANCER	1							
4	3	129407-28240	BUSH, BALANCER	4							
5	2	729490-28510	SHAFT ASSY, BALANCER	1							
10	2	729490-28520	SHAFT ASSY, BALANCER	1							
15	2	129400-28150	GEAR, BALANCER	1							
16	2	121850-21290	PIN	1							
17	2	128170-14150	NUT	1							
18	2	23876-005000	PLUG, R005	1							
19	2	26106-080142	BOLT, M8X 14 PLATED	4							
20	1	129795-01960	PIPE, KNOCK	2							
21	1	24311-000140	O-RING, 1AP14.0	1							
22	1	26106-080602	BOLT, M8X 60 PLATED	4							
23	1	26106-080802	BOLT, M8X 80 PLATED	2							

N:Old ◄Yes/No► New. Q:Old ◄No/Yes► New. R:Old ◄Yes/Yes► New. S:Old ◄No/No► New. W:Add. Z:Discontinued. F:Interchangeable by set. K:Q'ty Change

Copyright (C) YANMAR CO., LTD. All RightsReserved.

0CV10-M91700

Fig.11. LUB. OIL SYSTEM

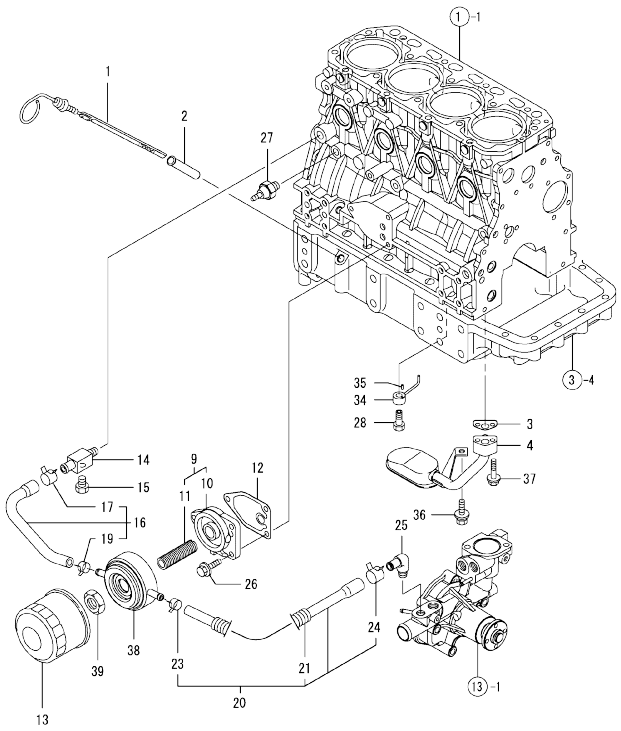

(A)=4TNV84T-KLAN (D)=
(B)= (E)=
(C)= (F)=

No.	Lev.	Parts No.	Description	Q'ty (A)	(B)	(C)	(D)	(E)	(F)	I	R
1	1	129457-34800	DIPSTICK, OIL	1							
1-1	1	129558-34810	DIPSTICK, OIL	1						N	
	(A=*2009.01.)										
2	1	121520-34810	GUIDE, DIPSTICK	1							
3	1	129150-35041	GASKET	1							
4	1	129457-35090	PIPE ASSY, OIL INLET	1							
9	1	129006-35100	BRACKET ASSY, FILTER	1							
10	2	119802-35110	BRACKET, FILTER	1							
11	2	129417-35150	STUD, L=67	1							
12	1	129150-35111	GASKET	1							
13	1	129150-35153	FILTER 80X80L	1							1
14	1	129006-44480	JOINT	1							
15	1	171056-49120	PLUG, DRAIN	1							
16	1	129508-49030	PIPE ASSY, WATER	1							
17	2	171008-03990	CLIP, HOSE 18.5	1							
19	2	23080-015000	CLAMP, 15	1							
20	1	129508-49040	PIPE ASSY, WATER	1							
21	2	119940-59130	TUBE, CORRUGATED	1							
23	2	23080-015000	CLAMP, 15	1							
24	2	23080-018000	CLAMP, 18	1							
25	1	129103-49301	ELBOW, PT1/4	1							
26	1	26106-080202	BOLT, M8X 20 PLATED	3							
27	1	114250-39450	SWITCH, 0.5KG	1							
28	1	129792-39410	VALVE ASSY, CHECK	4							
34	1	129553-39650	NOZZLE	4							
35	1	22351-030010	PIN, SPRING 3.0X10	4							
36	1	26014-080162	BOLT, M8X 16	1							
37	1	26106-080352	BOLT, M8X 35 PLATED	2							
38	1	129508-33010	COOLER ASSY, OIL	1							
39	1	129417-33110	NUT	1							

Remarks
(1) REPAIR PART.

N:Old ←Yes/No→ New. Q:Old ←No/Yes→ New. R:Old ←Yes/Yes→ New. S:Old ←No/No→ New. W:Add. Z:Discontinued. F:Interchangeable by set. K:Q'ty Change

Copyright (C) YANMAR CO., LTD. All RightsReserved.

0CV10-M91700

Fig.12. LUB. OIL LINE

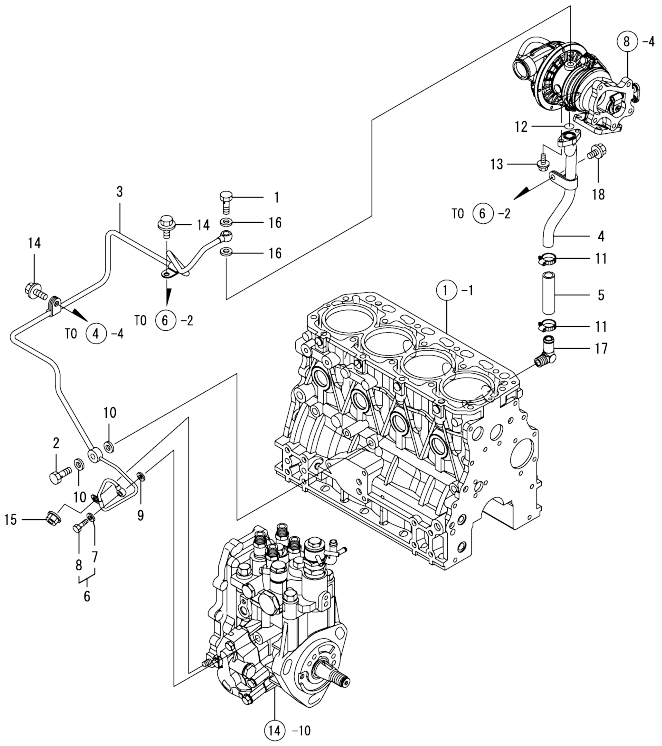

(A)=4TNV84T-KLAN (D)=
(B)= (E)=
(C)= (F)=

No.	Lev.	Parts No.	Description	Q'ty (A)	(B)	(C)	(D)	(E)	(F)	I	R
1	1	121252-39150	BOLT, JOINT M10X1.5	1							
2	1	124160-39140	BOLT, PIPE JOINT M10	1							
3	1	129564-39460	PIPE ASSY, OIL	1							
4	1	129564-39610	PIPE, OIL	1							
5	1	129403-39610	JOINT, RUBBER	1							
6	1	129005-59830	BOLT ASSY, JOINT M8	1							
7	2	22190-080002	WASHER, SEAL 6	1							
8	2	23857-030000	BOLT, JOINT 3	1							
9	1	22190-080002	WASHER, SEAL 6	1							
10	1	22190-100002	WASHER, SEAL 10	2							
11	1	23000-025000	CLAMP, 25	2							
12	1	24314-000160	O-RING, 4CP16.0	1							
13	1	26106-060162	BOLT, M6X 16 PLATED	2							
14	1	26106-080122	BOLT, M8X 12 PLATED	2							
15	1	26366-060002	NUT, M6	1							
16	1	23414-100000	GASKET, 10X1.0	2							
17	1	124070-13300	ELBOW, PT3/8	1							
18	1	26106-080122	BOLT, M8X 12 PLATED	1							

N:Old ←Yes/No→ New. Q:Old ←No/Yes→ New. R:Old ←Yes/Yes→ New. S:Old ←No/No→ New. W:Add. Z:Discontinued. F:Interchangeable by set. K:Q'ty Change

Copyright (C) YANMAR CO., LTD. All RightsReserved.

0CV10-M91700

Fig.13. COOLING WATER SYSTEM

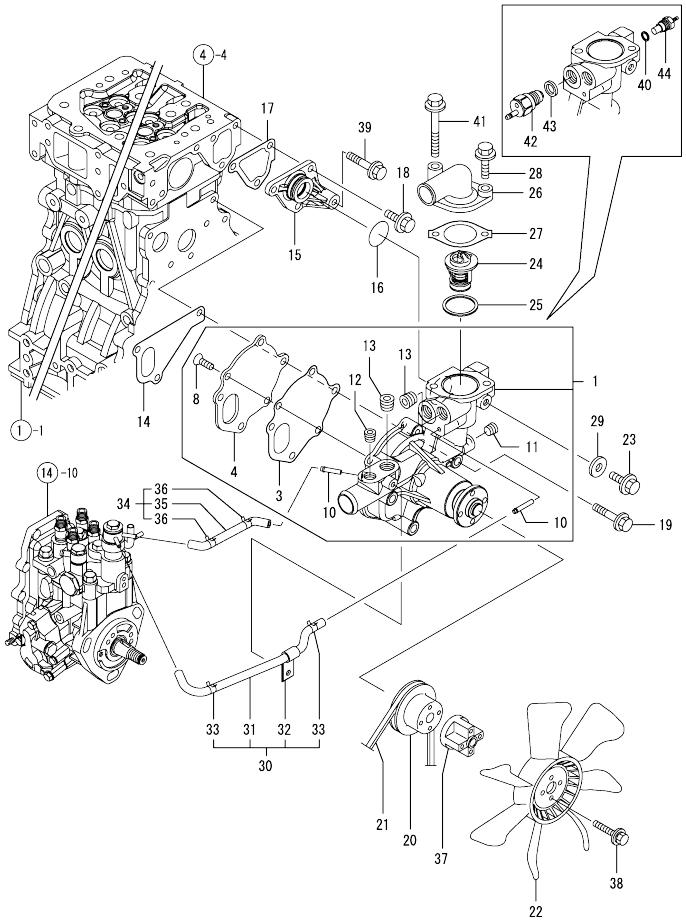

(A)=4TNV84T-KLAN (D)=
(B)= (E)=
(C)= (F)=

No.	Lev.	Parts No.	Description	Q'ty (A)	(B)	(C)	(D)	(E)	(F)	I	R
1	1	129508-42001	PUMP ASSY, WATER	1							
3	2	129100-42051	GASKET, WATER PUMP	1							
4	2	129100-42121	PLATE	1							
8	2	121850-42410	SCREW	3							
10	2	119802-49113	JOINT, PIPE	2							
11	2	23876-010000	PLUG, R01	1							
12	2	23876-020000	PLUG, R02	1							
13	2	129916-49740	PLUG, R03	2							
14	1	129486-42021	GASKET, WATER PUMP	1							
15	1	129004-42040	JOINT	1							
16	1	129486-42140	O-RING, G30	1							
17	1	124395-49840	GASKET	1							
18	1	26106-080162	BOLT, M8X 16 PLATED	3							
19	1	26106-080602	BOLT, M8X 60 PLATED	3							
20	1	129556-42350	V-PULLEY, 96	1							
21	1	25132-003600	V-BELT, A36	1							
22	1	121267-44741	FAN, COOLING D=360	1							
23	1	26106-080122	BOLT, M8X 12 PLATED	1							
24	1	129457-49801	THERMOSTAT, 82	1							
25	1	129150-49811	GASKET, THERMOSTAT	1							
26	1	124101-49531	COVER, THERMOSTAT	1							
27	1	129795-49551	GASKET	1							
28	1	26106-080252	BOLT, M8X 25 PLATED	1							
29	1	23414-080000	GASKET, 8X1.0	1							
30	1	129004-49610	PIPE ASSY, WATER	1							
31	2	129004-49711	PIPE ASSY, WATER	1							
32	2	119802-49730	RETAINER, PIPE	1							
33	2	124722-59050	CLIP, HOSE 9	2							
34	1	129004-49620	PIPE ASSY, WATER	1							
35	2	129004-49721	PIPE ASSY, WATER	1							
36	2	124722-59050	CLIP, HOSE 9	2							
37	1	171353-44760	SPACER, FAN	1							
38	1	26014-060452	BOLT, M6X 45	4							
39	1	26106-080452	BOLT, M8X 45 PLATED	1							
40	1	129150-49360	GASKET	1							
41	1	26106-080652	BOLT, M8X 65 PLATED	1							
42	1	121250-44901	SWITCH, 110	1							
43	1	124465-44950	GASKET, 16	1							
44	1	124250-49351	SENSOR	1							

N:Old ←Yes/No→ New. Q:Old ←No/Yes→ New. R:Old ←Yes/Yes→ New. S:Old ←No/No→ New. W:Add. Z:Discontinued. F:Interchangeable by set. K:Q'ty Change

Copyright (C) YANMAR CO., LTD. All RightsReserved.

0CV10-M91700

Fig.14. FUEL INJECTION PUMP

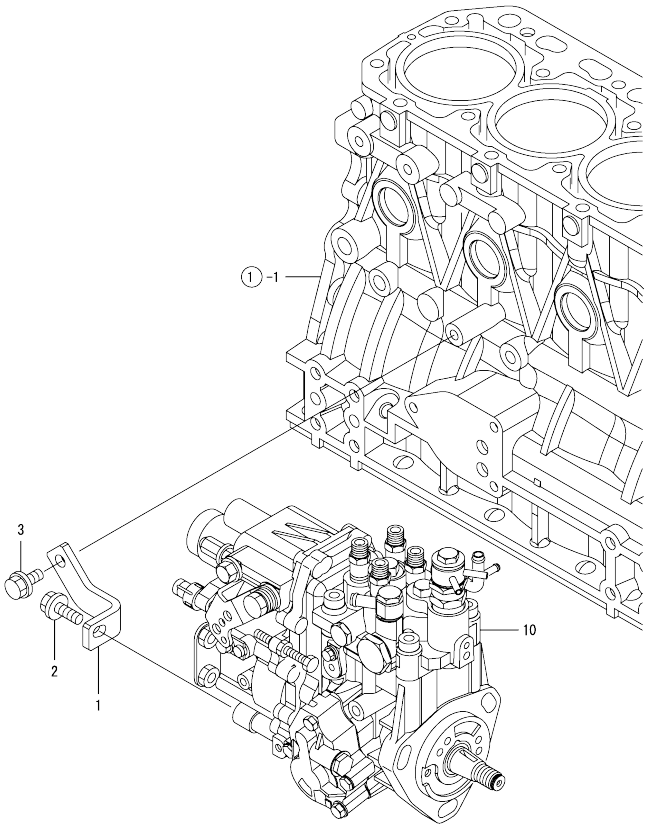

(A)=4TNV84T-KLAN (D)=
(B)= (E)=
(C)= (F)=

No.	Lev.	Parts No.	Description	Q'ty (A)	(B)	(C)	(D)	(E)	(F)	I	R
1	1	129508-51250	RETAINER, PUMP	1							
2	1	26106-080202	BOLT, M8X 20 PLATED	1							
3	1	26106-080302	BOLT, M8X 30 PLATED	1							
10	1	729564-51300	PUMP ASSY, INJECTION	1							

N:Old ←Yes/No→ New. Q:Old ←No/Yes→ New. R:Old ←Yes/Yes→ New. S:Old ←No/No→ New. W:Add. Z:Discontinued. F:Interchangeable by set. K:Q'ty Change

Copyright (C) YANMAR CO., LTD. All RightsReserved.

0CV10-M91700

Fig.15. FUEL INJECTION VALVE

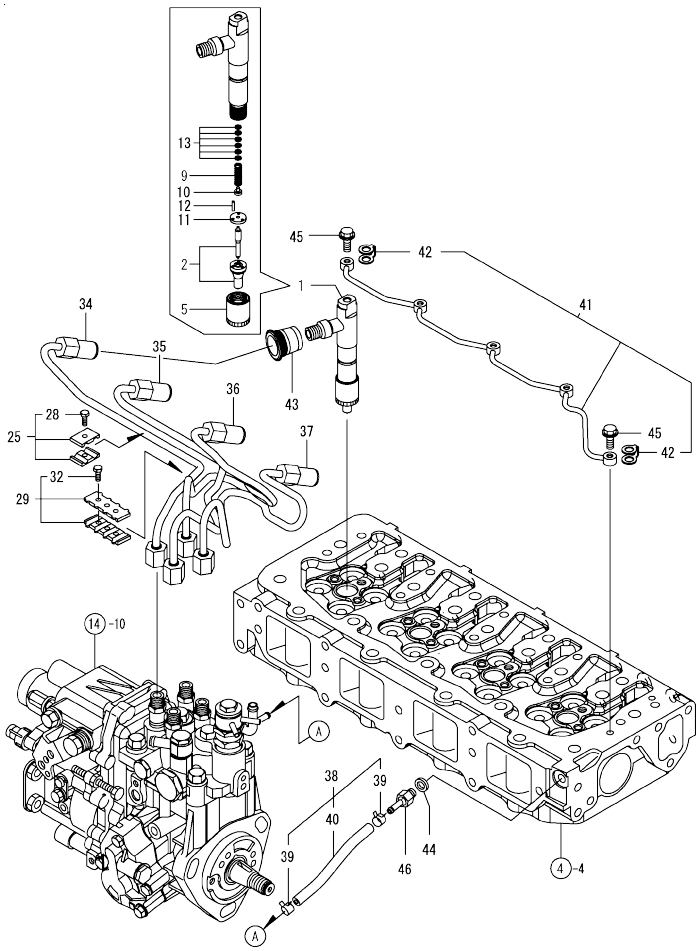

(A)=4TNV84T-KLAN (D)=
(B)= (E)=
(C)= (F)=

No.	Lev.	Parts No.	Description	Q'ty (A)	(B)	(C)	(D)	(E)	(F)	I	R
1	1	729508-53100	VALVE ASSY,INJECTION	4							
2	2	129508-53000	VALVE ASSY,INJECTION	4							
5	2	114250-53080	NUT, NOZZLE D16.95	4							
9	2	114250-53120	SPRING, NOZZLE	4							
10	2	114250-53130	SEAT, SPRING	4							
11	2	114250-53140	PLATE	4							
12	2	114250-53210	PIN	8							
13	2	114250-53400	SHIM SET	4							
25	1	119305-59120	RETAINER, PIPE	2							
28	2	129150-59131	BOLT, M4X14	2							
29	1	129550-59120	RETAINER, PIPE	1							
32	2	129150-59131	BOLT, M4X14	2							
34	1	129508-59910	PIPE ASSY, INJECTION	1							
35	1	129508-59920	PIPE ASSY, INJECTION	1							
36	1	129508-59930	PIPE ASSY, INJECTION	1							
37	1	129508-59940	PIPE ASSY, INJECTION	1							
38	1	129508-59570	PIPE ASSY, RETURN	1							
39	2	124722-59050	CLIP, HOSE 9	2							
40	2	129508-59510	PIPE, FUEL RETURN	1							
41	1	129508-59550	PIPE ASSY, RETURN	1							
42	2	123907-59550	GASKET	5							
43	1	123907-11601	SEAL	4							
44	1	22190-080002	WASHER, SEAL 6	1							
45	1	123907-59540	BOLT, PIPE JOINT M6	5							
46	1	123907-59560	JOINT	1							

N:Old ←Yes/No→ New. Q:Old ←No/Yes→ New. R:Old ←Yes/Yes→ New. S:Old ←No/No→ New. W:Add. Z:Discontinued. F:Interchangeable by set. K:Q'ty Change

Copyright (C) YANMAR CO., LTD. All RightsReserved.

0CV10-M91700

Fig.16. FUEL LINE

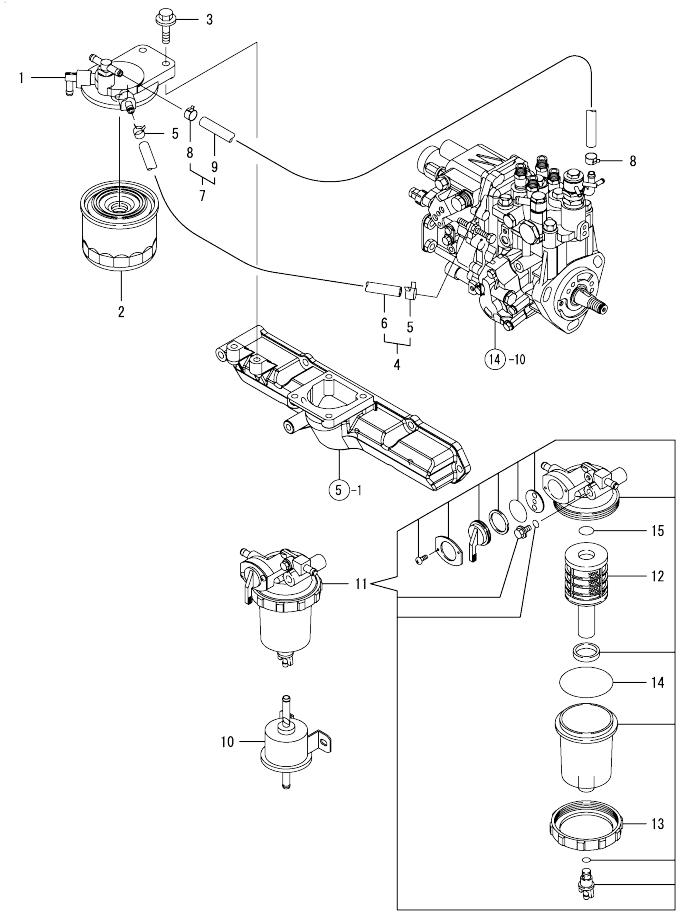

(A)=4TNV84T-KLAN (D)=
(B)= (E)=
(C)= (F)=

No.	Lev.	Parts No.	Description	Q'ty (A)	(B)	(C)	(D)	(E)	(F)	I	R
1	1	129004-55610	BRACKET, FILTER	1							
2	1	119802-55800	FILTER, FUEL	1							
3	1	26106-080302	BOLT, M8X 30 PLATED	2							
4	1	129210-59110	PIPE ASSY, FUEL	1							
5	2	124766-59050	CLIP, HOSE 12	2							
6	2	105025-59560	PIPE, FUEL	1							
7	1	129210-59160	PIPE ASSY, FUEL	1							
8	2	124766-59050	CLIP, HOSE 12	2							
9	2	129612-59520	PIPE, FUEL	1							
10	1	119225-52102	PUMP ASSY, FUEL FEED	1							
11	1	119802-55700	SEPARATOR ASSY	1							
12	2	119802-55710	ELEMENT	1							
13	2	129100-55690	RING, RETAINING	1							
14	2	24321-000650	O-RING, 1AG65.0	1							
15	2	24311-000160	O-RING, 1AP16.0	1							

N:Old ←Yes/No→ New. Q:Old ←No/Yes→ New. R:Old ←Yes/Yes→ New. S:Old ←No/No→ New. W:Add. Z:Discontinued. F:Interchangeable by set. K:Q'ty Change

Copyright (C) YANMAR CO., LTD. All RightsReserved.

0CV10-M91700

Fig.17. STARTING MOTOR

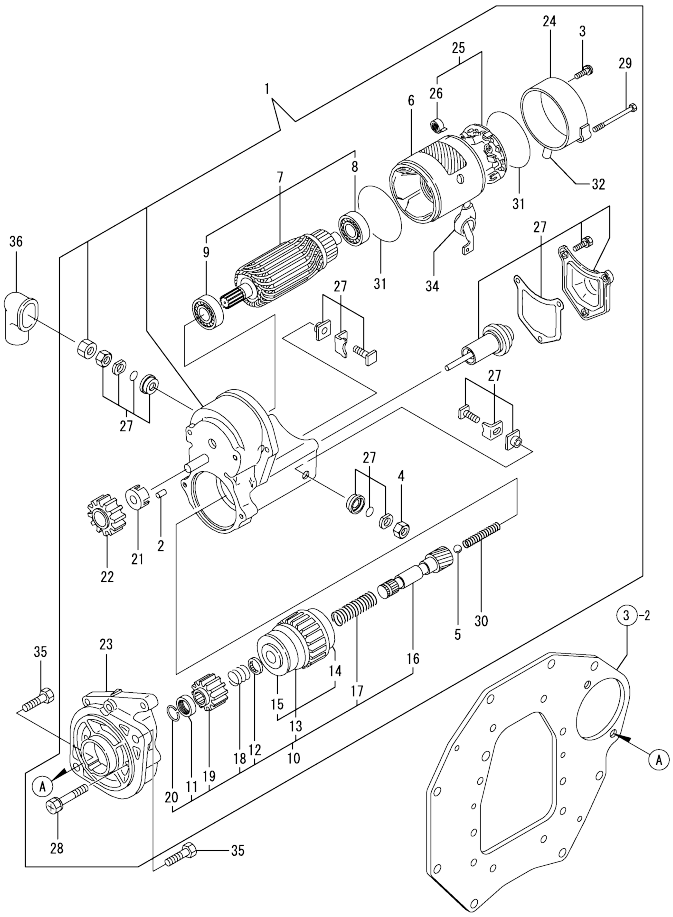

(A)=4TNV84T-KLAN (D)=
(B)= (E)=
(C)= (F)=

No.	Lev.	Parts No.	Description	Q'ty (A)	(B)	(C)	(D)	(E)	(F)	I	R
1	1	129407-77010	STARTER, RA1.4	1							
2	2	X0283060061	ROLLER	5							
3	2	129129-77460	SCREW	2							
4	2	X9490561370	NUT	1							
5	2	X9491200240	BALL	1							
6	2	129407-77210	YOKE ASSY	1							
7	2	129407-77220	ARMATURE ASSY	1							
8	3	129129-77230	BEARING	1							
9	3	129129-77240	BEARING	1							
10	2	129407-77250	STARTER	1							
11	3	X0280210230	NUT	1							
12	3	X0283270140	RETAINER	1							
13	3	129407-77390	CLUTCH ASSY	1							
14	4	129129-77440	BEARING	1							
15	4	129129-77450	BEARING	1							
16	3	129129-77400	SHAFT	1							
17	3	129129-77410	SPRING, COIL	1							
18	3	X9491703371	SPRING, COIL	1							
19	3	129129-77420	PINION	1							
20	3	129129-77430	RING	1							
21	2	129129-77260	RETAINER	1							
22	2	129129-77270	PINION	1							
23	2	129407-77280	HOUSING	1							
24	2	129407-77290	FRAME	1							
25	2	129407-77300	HOLDER ASSY	1							
26	3	X9491730461	SPRING	4							
27	2	129407-77310	SWITCH ASSY	1							
28	2	129129-77320	BOLT	2							
29	2	129407-77330	BOLT	2							
30	2	129129-77340	SPRING	1							
31	2	129129-77350	O-RING	2							
32	2	129129-77362	COVER	1							
34	2	129129-77380	CAP	1							
35	1	26116-120252	BOLT, M12X 25 PLATED	2							
36	1	124550-77030	COVER, TERMINAL	1							

N:Old ←Yes/No→ New. Q:Old ←No/Yes→ New. R:Old ←Yes/Yes→ New. S:Old ←No/No→ New. W:Add. Z:Discontinued. F:Interchangeable by set. K:Q'ty Change

Copyright (C) YANMAR CO., LTD. All RightsReserved.

0CV10-M91700

Fig.18. GENERATOR

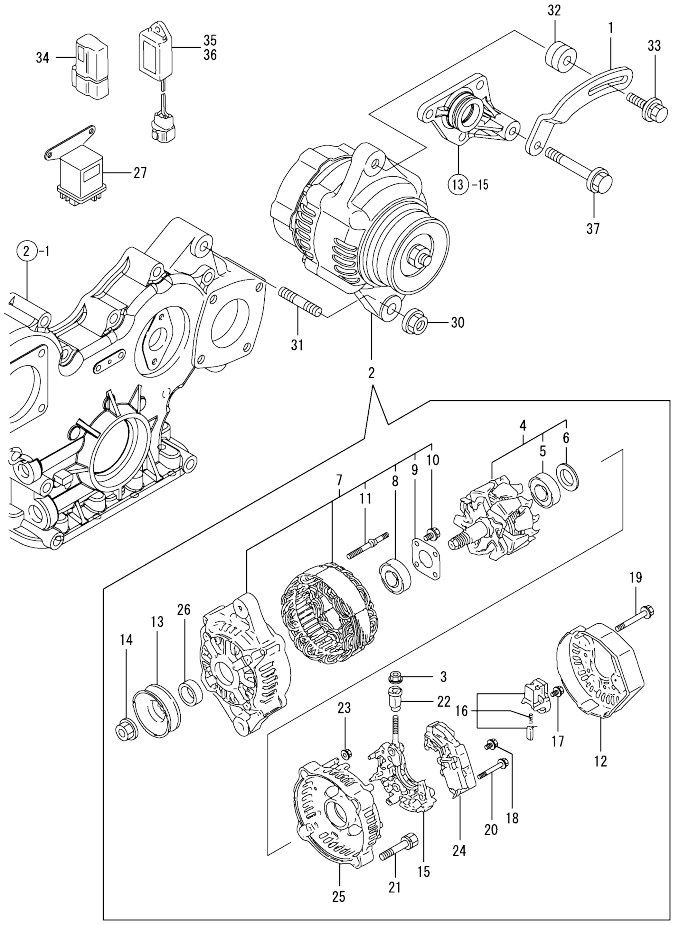

(A)=4TNV84T-KLAN (D)=
(B)= (E)=
(C)= (F)=

No.	Lev.	Parts No.	Description	Q'ty (A)	(B)	(C)	(D)	(E)	(F)	I	R
1	1	129051-77330	ADJUSTER	1							
2	1	119626-77210	ALTERNATOR, 12V-55A	1							
3	2	X9490561001	NUT	1							
4	2	129052-77380	ROTOR ASSY	1							
5	3	123501-79240	BEARING, BALL	1							
6	3	119620-79250	COVER, BEARING	1							
7	2	129052-77422	FRAME ASSY	1							
8	3	119620-79200	BALL BEARING	1							
9	3	119620-79210	PLATE	1							
10	3	119620-79220	SCREW	4							
11	3	119620-79230	BOLT, STUD	2							
12	2	128401-77440	FRAME	1							
13	2	119620-77461	PULLEY	1							
14	2	119620-77471	NUT	1							
15	2	129052-79260	HOLDER	1							
16	2	129052-79270	HOLDER, BRUSH	1							
17	2	119620-79290	SCREW	6							
18	2	119620-79300	SCREW	1							
19	2	119620-79310	BOLT	3							
20	2	119620-79320	SCREW W/WASHER	2							
21	2	119620-79330	BOLT	2							
22	2	119620-79340	INSULATION BUSH	1							
23	2	119620-79350	NUT	2							
24	2	129423-77710	REGULATOR ASSY	1							
25	2	119626-79410	COVER	1							
25-1	2	119626-77450	COVER, END, RR	1						N	
	(A=FROM 1ST)										
26	2	119620-77490	COLLAR	1							
27	1	119650-77910	RELAY ASSY, GLOW	1							
30	1	26306-100002	NUT, M10	1							
31	1	129795-01900	STUD	1							
32	1	129657-77340	SPACER	1							
33	1	26014-080502	BOLT, M8X 50	1							
34	1	119643-66900	DIODE	1							
35	1	129211-77920	TIMER	1							
36	1	128300-77920	TIMER	1							
37	1	26106-080502	BOLT, M8X 50 PLATED	1							

N:Old ←Yes/No→ New. Q:Old ←No/Yes→ New. R:Old ←Yes/Yes→ New. S:Old ←No/No→ New. W:Add. Z:Discontinued. F:Interchangeable by set. K:Q'ty Change

Copyright (C) YANMAR CO., LTD. All RightsReserved.

0CV10-M91700

Fig.19. GASKET SET

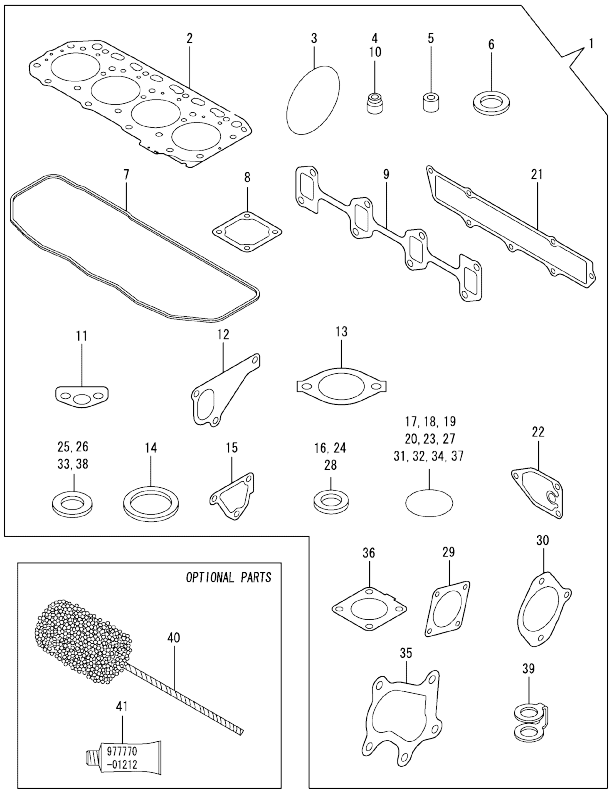

(A)=4TNV84T-KLAN (D)=
(B)= (E)=
(C)= (F)=

No.	Lev.	Parts No.	Description	Q'ty (A)	(B)	(C)	(D)	(E)	(F)	I	R
1	1	729408-92960	GASKET SET	1							1
2	2	129508-01330	GASKET, HEAD	1							
3	2	121850-51960	O-RING	1							
4	2	119717-11340	SEAL, VALVE STEM	8							
5	2	119802-11870	PROTECTOR, NOZZLE	4							
6	2	119625-11880	SEAT, NOZZLE	4							
7	2	129508-11310	GASKET, BONNET	1							
8	2	129150-77511	GASKET	1							
9	2	129550-13110	GASKET	1							
10	2	119717-11350	SEAL, VALVE STEM	8							
11	2	129150-35041	GASKET	1							
12	2	129486-42021	GASKET, WATER PUMP	1							
13	2	129795-49551	GASKET	1							
14	2	129150-49811	GASKET, THERMOSTAT	1							
15	2	124395-49840	GASKET	1							
16	2	22190-080002	WASHER, SEAL 6	3							
17	2	24311-000120	O-RING, 1AP12.0	3							
18	2	24311-000320	O-RING, 1AP32.0	2							
19	2	24341-000240	O-RING, 1AS24.0	1							
20	2	129486-42140	O-RING, G30	1							
21	2	129508-12110	GASKET, MANIFOLD	1							
22	2	129150-35111	GASKET	1							
23	2	119609-32040	O-RING, P16	4							
24	2	22190-100002	WASHER, SEAL 10	2							
25	2	23414-080000	GASKET, 8X1.0	1							
26	2	129150-49360	GASKET	1							
27	2	24311-000150	O-RING, 1AP15.0	1							
28	2	22190-160002	WASHER, SEAL 16	1							
29	2	124240-01883	GASKET	1							
30	2	171353-26081	GASKET	1							
31	2	24321-000850	O-RING, 1AG85.0	1							
32	2	24311-000140	O-RING, 1AP14.0	1							
33	2	124465-44950	GASKET, 16	1							
34	2	24341-000400	O-RING, 1AS40.0	1							
35	2	129508-18090	GASKET	1							
36	2	129508-18080	GASKET	1							
37	2	24314-000160	O-RING, 4CP16.0	1							
38	2	23414-100000	GASKET, 10X1.0	2							
39	2	123907-59550	GASKET	5							
40	1	129400-92420	FLEX HORN	1							1
41	1	977770-01212	GASKET, LIQUID	1							1

Remarks
(1) OPTIONAL PART.

N:Old ←Yes/No→ New. Q:Old ←No/Yes→ New. R:Old ←Yes/Yes→ New. S:Old ←No/No→ New. W:Add. Z:Discontinued. F:Interchangeable by set. K:Q'ty Change

Copyright (C) YANMAR CO., LTD. All RightsReserved.

Parts No. Index

Parts No.	Fig. No.	Ref. No.
105025-59560	16	6
105425-01690	3	7
114250-39450	11	27
114250-53080	15	5
114250-53120	15	9
114250-53130	15	10
114250-53140	15	11
114250-53210	15	12
114250-53400	15	13
119131-18320	6	3
119225-52102	16	10
119305-59120	15	25
119309-01810	1	30
119609-32040	2	17
	19	23
119620-77461	18	13
119620-77471	18	14
119620-77490	18	26
119620-79200	18	8
119620-79210	18	9
119620-79220	18	10
119620-79230	18	11
119620-79250	18	6
119620-79290	18	17
119620-79300	18	18
119620-79310	18	19
119620-79320	18	20
119620-79330	18	21
119620-79340	18	22
119620-79350	18	23
119625-11880	4	27
	19	6
119626-77210	18	2
119626-77450	18	25 -1
119626-79410	18	25
119643-66900	18	34
119650-77910	18	27
119717-11190	4	24
119717-11340	4	18
	19	4
119717-11350	4	19
	19	10
119717-11800	4	11
119802-01560	2	13
119802-03070	4	51
119802-11870	4	46
	19	5
119802-13650	6	4
119802-13670	6	5
119802-13820	6	6 -1

Parts No.	Fig. No.	Ref. No.
119802-21201	9	5
119802-25051	7	9
119802-25070	7	13
119802-25100	7	10
119802-25901	7	15
119802-32070	2	8
119802-32100	2	7
119802-32130	2	20
119802-35110	11	10
119802-49113	13	10
119802-49730	13	32
119802-55700	16	11
119802-55710	16	12
119802-55800	16	2
119865-21600	9	18
119940-59130	11	21
121023-01550	2	28
121023-26070	7	19
121111-21501	9	14
121250-44901	13	42
121252-39150	12	1
121267-44741	13	22
121520-34810	11	2
121550-23200	9	32
121850-21290	9	6
	10	16
121850-21680	9	13
121850-42410	13	8
121850-51960	2	21
	19	3
123501-79240	18	5
123907-11601	15	43
123907-11830	4	23
123907-59540	15	45
123907-59550	15	42
	19	39
123907-59560	15	46
124060-01050	1	10
124070-13300	12	17
124101-49531	13	26
124160-01751	2	14
	4	48
124160-01910	1	5
124160-11360	4	59
124160-39140	12	2
124240-01871	2	15
	7	17
124240-01883	7	18
	19	29
124250-49351	13	44

Parts No.	Fig. No.	Ref. No.
124395-49840	13	17
	19	15
124465-44950	13	43
	19	33
124550-77030	17	36
124722-59050	13	33
		36
	15	39
124766-59050	16	5
		8
128170-14150	10	17
128300-77920	18	36
128401-77440	18	12
129001-01250	1	11
129001-02930	1	24
129001-32330	2	11
129001-91841	2	22
129001-91870	3	10
129001-91910	3	11
129004-01190	1	33
129004-22500	9	21
129004-22950	9	37
129004-42040	13	15
129004-49610	13	30
129004-49620	13	34
129004-49711	13	31
129004-49721	13	35
129004-55610	16	1
129005-01520	2	12
129005-59830	12	6
129006-03120	4	53
129006-35100	11	9
129006-44480	11	14
129051-01600	3	2
129051-01721	3	5
129051-26200	7	21
129051-26210	7	23
129051-77330	18	1
129052-77380	18	4
129052-77422	18	7
129052-79260	18	15
129052-79270	18	16
129100-01580	3	1
		16
	9	2
129100-01640	3	17
129100-23910	9	31
129100-42051	13	3
129100-42121	13	4
129100-55690	16	13

Parts No.	Fig. No.	Ref. No.
129103-49301	11	25
129120-77501	5	6
129129-77230	17	8
129129-77240	17	9
129129-77260	17	21
129129-77270	17	22
129129-77320	17	28
129129-77340	17	30
129129-77350	17	31
129129-77362	17	32
129129-77380	17	34
129129-77400	17	16
129129-77410	17	17
129129-77420	17	19
129129-77430	17	20
129129-77440	17	14
129129-77450	17	15
129129-77460	17	3
129150-01200	1	31
129150-02020	1	7
129150-02450	7	4
129150-02870	1	34
129150-02930	1	27
129150-02940	1	37
129150-03070	4	52
129150-03090	4	64
129150-11230	4	36
		40
129150-11750	4	22
		37
		41
129150-14101	7	7
129150-14200	7	1
129150-14400	7	2
129150-23600	9	33
129150-23610	9	41
129150-25301	7	16
129150-35041	11	3
	19	11
129150-35111	11	12
	19	22
129150-35153	11	13
129150-49360	13	40
	19	26
129150-49811	13	25
	19	14
129150-59131	15	28
		32
129150-77511	5	7
	19	8

Parts No. Index

Parts No.	Fig. No.	Ref. No.
129202-22300	9	25
129210-59110	16	4
129210-59160	16	7
129211-77920	18	35
129400-28121	9	7
129400-28150	10	15
129400-92420	19	40
129403-39610	12	5
129407-28240	10	4
129407-77010	17	1
129407-77210	17	6
129407-77220	17	7
129407-77250	17	10
129407-77280	17	23
129407-77290	17	24
129407-77300	17	25
129407-77310	17	27
129407-77330	17	29
129407-77390	17	13
129417-33110	11	39
129417-35150	11	11
129418-18320	8	2
129418-32320	2	10
129423-77710	18	24
129457-01700	3	4
129457-01780	3	6
129457-21560	9	15
129457-21650	9	11
129457-28000	10	1
129457-28011	10	2
129457-34800	11	1
129457-35090	11	4
129457-49801	13	24
129486-01670	3	20
129486-42021	13	14
	19	12
129486-42140	13	16
	19	20
129508-01330	1	32
	19	2
129508-03010	4	50
129508-11100	4	25
129508-11110	4	15
129508-11130	4	16
129508-11180	4	17
129508-11241	4	28
129508-11250	4	29
129508-11260	4	31
129508-11270	4	32
129508-11280	4	33

Parts No.	Fig. No.	Ref. No.
129508-11310	4	56
	19	7
129508-11350	4	49
129508-11650	4	34
129508-11660	4	38
129508-11700	4	4
129508-11800	4	20
129508-11820	4	12
129508-11840	4	3
129508-11900	4	62
129508-11920	4	42
129508-12110	5	3
	19	21
129508-12120	5	1
129508-12121	5	1 -1
129508-14580	7	3
129508-18010	8	4
129508-18080	8	1
	19	36
129508-18090	8	5
	19	35
129508-22080	9	19
129508-22900	9	35
129508-32111	2	18
129508-32120	2	19
129508-33010	11	38
129508-42001	13	1
129508-49030	11	16
129508-49040	11	20
129508-51250	14	1
129508-53000	15	2
129508-59510	15	40
129508-59550	15	41
129508-59570	15	38
129508-59910	15	34
129508-59920	15	35
129508-59930	15	36
129508-59940	15	37
129550-13110	6	1
	19	9
129550-59120	15	29
129553-39650	11	34
129556-42350	13	20
129558-34810	11	1 -1
129564-12080	5	9
129564-13110	6	2
129564-21001	9	1
129564-39460	12	3
129564-39610	12	4
129612-59520	16	9

Parts No.	Fig. No.	Ref. No.
129657-77340	18	32
129693-44310	6	6
129792-39410	11	28
129795-01780	3	19
129795-01800	2	6
129795-01900	18	31
129795-01950	2	16
129795-01960	10	20
129795-02411	1	14
129795-21661	9	12
129795-49551	13	27
	19	13
129900-07900	4	1
129900-32130	2	9
129907-11950	4	47
129916-49740	13	13
158552-51151	7	33
171008-03990	11	17
171051-01921	1	6
171056-49120	11	15
171353-26081	7	20
	19	30
171353-44760	13	37
22190-080002	12	7
		9
	15	44
	19	16
22190-100002	12	10
	19	24
22190-160002	3	9
	19	28
22217-140000	7	34
22252-000260	9	26
22351-030010	11	35
22351-060012	4	63
22512-070140	7	8
	9	9
		10
22857-500100	4	57
23000-025000	12	11
23000-048000	5	10
23000-060000	5	11
23080-015000	11	19
		23
23080-018000	11	24
23414-080000	13	29
	19	25
23414-100000	12	16
	19	38
23857-030000	12	8

Parts No.	Fig. No.	Ref. No.
23876-005000	10	18
23876-010000	13	11
23876-020000	4	13
	13	12
23876-030000	2	4
23876-040000	2	5
24105-060064	7	27
24311-000120	4	60
		73
	19	17
24311-000140	10	21
	19	32
24311-000150	19	27
24311-000160	16	15
24311-000180	3	12
24311-000320	2	23
	4	61
	19	18
24314-000160	12	12
	19	37
24321-000650	16	14
24321-000850	7	28
	19	31
24341-000240	2	29
	19	19
24341-000400	4	58
	19	34
25132-003600	13	21
26014-060452	13	38
26014-080162	11	36
26014-080502	18	33
26106-060162	2	30
	12	13
26106-080122	12	14
		18
	13	23
26106-080142	4	2
	7	32
	10	19
26106-080162	2	24
		25
	7	29
	13	18
26106-080202	5	4
	11	26
	14	2
26106-080252	3	13
	4	44
	13	28
26106-080302	14	3

Parts No. Index

Parts No.	Fig. No.	Ref. No.
26106-080302	16	3
26106-080352	5	8
	11	37
26106-080402	3	14
	7	14
26106-080452	13	39
26106-080502	3	15
	4	45
	18	37
26106-080552	2	26
26106-080602	10	22
	13	19
26106-080652	13	41
26106-080802	5	5
	10	23
26106-100452	7	30
26116-120252	17	35
26206-100202	3	3
26226-080352	4	43
26306-080002	2	27
	8	3
26306-100002	18	30
26366-060002	12	15
26450-080282	7	31
26776-140002	7	35
27241-120000	1	12
27241-300000	1	13
27241-400000	4	14
729402-23100	9	27
729408-92960	19	1
729490-28510	10	5
729490-28520	10	10
729508-01520	2	1
729508-53100	15	1
729564-01560	1	1
729564-51300	14	10
977770-01212	2	31
	3	21
	4	65
	19	41
X0280210230	17	11
X0283060061	17	2
X0283270140	17	12
X9490561001	18	3
X9490561370	17	4
X9491200240	17	5
X9491703371	17	18
X9491730461	17	26

Parts No.	Fig. No.	Ref. No.

Parts No.	Fig. No.	Ref. No.

Parts No.	Fig. No.	Ref. No.