YANMAR

PARTS CATALOG

0CV10-M97800EN

Last update Sep., 2014

PREFACE

1. This Parts Catalog carries all parts incorporated in YANMAR Model 4TNV84T-XWA engine manufactured since June, 2004.

2. Each illustration corresponds to the parts list on the following page.

3. When ordering parts, clearly write down engine model and serial number, as well as the name and number of each part in your order sheet. This will help insure reliable delivery of the parts you have ordered.

Directions for the Parts Catalog.

1.The parts stipulated in this Parts Catalog are not necessarily standard equipped parts.
2.Parts may change without prior notice.
3.The following is an example of the Parts Catalog format.

0CF10-G21601 29. FUEL INJECTION PUMP(W/BOOST)

(A)=4JH-DT
(B)=4JH-DTZ
(C)=4JH-DTZP
(D)=4JH-DTZA
(E)=4JH-DTZY
(F)=

① REF.	② LEV.	PARTS NO.	DESCRIPTION	Q'TY (A)	(B)	(C)	(D)	(E)	(F)	③ I	⑤ R
1	1	729595-51390	FUEL INJECTION PUMP	1	1	1	1	1			1
1-1	1	729595-51391	FUEL INJECTION PUMP	1	1	1	1	1		N	1
	(A=E00185)	(B=E00200)									
3	2	26022-060162	SCREW M 6X 16	9	9	9	9	9			
3-1 ④	2	26022-060162	SCREW M 6X 16	4	4	4	4	4		K	
	(A=E00156)	(B=E00156)	(C=E00156) (D=E00156)	(E=E00156)							
4	2	129470-51040	CAMSHAFT	1	1	1	1	1			
5	2	122710-51050	BEARING, ROLLER	2	2	2	2	2			
6	2	129470-51060	RETAINER	1	1	1	1	1			

Remarks
(1) BOOST COMPEMSATOR TYPE. OPTIONAL
PART, TO E00155,(4JH-DT, 4JH-DTZ

① Ref. No.

The Ref. No. listed may not be in accordance with the illustration Ref. No.

(Ex.) Illustration No. 1 List Ref No. 1 (Before change) → 1- 1 (After change)

For interchangeable symbols N, R and K, illustrations for new parts may be abbreviated.

② Lev. (Level)

Level indication
The numbers below indicate the level of relativity towards the main part.
1 ----- Main parts (Assembly parts)
2 ----- Sub component included in " 1 ".
3 ----- Sub component included in " 2 ".
Note) Parts that are not for sale are partially illustrated but not listed.

③ Interchangeability Mark

When a part change takes place, one of the following interchangeability symbols is indicated beside the part.

Symbol	Interchangeability	Contents note
N	Old ← Yes / No → New	New Part is interchangeable for Old Part but Old Part is not interchangeable for New Part.
Q	Old ← No / Yes → New	New Part is not interchangeable for Old Part but Old Part is interchangeable for New Part.
R	Old ← Yes / Yes → New	New/ Old Parts are both interchangeable.
S	Old ← No / No → New	New/ Old Parts are both not interchangeable.
W		Part newly added.
Z		Part discontinued.
F		Not interchangeable by a single part but interchangeable together with related parts.
K		Changes only for used parts quantities.

④ Effective Machine No.

When a part changes, the effective Machine No. will be indicated in the (A)-(F) column.

Product Symbol	Product No.	Product Symbol	Product No.
C	Clutch No. Compressor No.	F	Machine No. (Agricultural Equip.)
D	Drive No.	M	Machine No.
E	Engine No.		

Note 1) A date may follow the symbol. (Ex.) 1996.01
Note 2) " XXXXX " and " ZZZZZ " are for parts that could not be predicted or for engine models that could not be identified.
Note 3) (A=E00185) is the E (Engine Serial Number) for the column (A) model (in this case 4JH-DT) after the parts design change.

⑤ Remarks Mark

Figures or alphabets (symbols) are entered in the remarks column.
The comments (remarks) on parts that are indicated at the bottom of the illustration are the same symbols as those stated above.

Contents

0CV10-M97800

Fig. No.	Fig. Name
ENGINE SECTION (4TNV84T-XWA)	
1.	CYLINDER BLOCK
2.	GEAR HOUSING
3.	FLYWHEEL HOUSING & OIL SUMP
4.	CYLINDER HEAD & BONNET
5.	SUCTION MANIFOLD
6.	EXHAUST MANIFOLD
7.	CAMSHAFT & DRIVING GEAR
8.	TURBOCHARGER
9.	CRANKSHAFT & PISTON
10.	LUB. OIL SYSTEM
11.	LUB. OIL PIPE
12.	COOLING WATER SYSTEM
13.	FUEL INJECTION PUMP
14.	FUEL INJECTION VALVE
15.	FUEL PIPE
16.	STARTING MOTOR
17.	GENERATOR
18.	GASKET SET & TOOLS

Fig.1. CYLINDER BLOCK

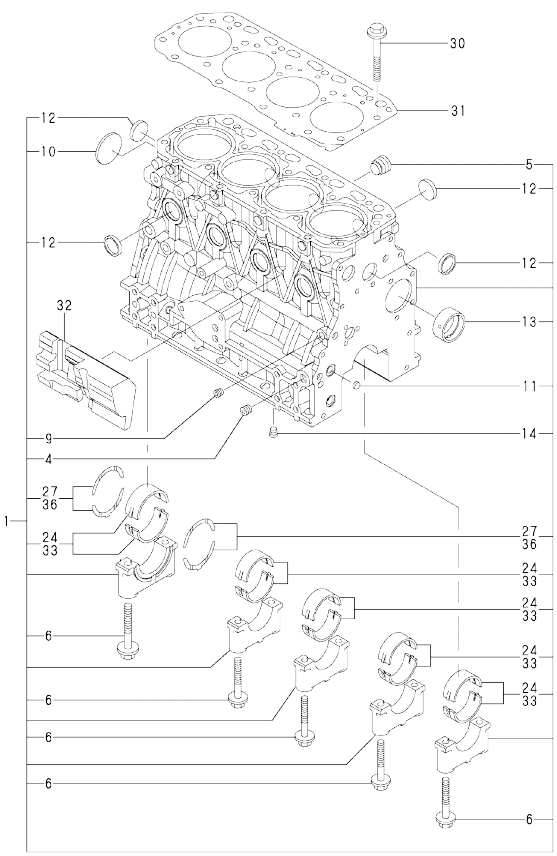

(A)=4TNV84T-XWA
(B)=
(C)=
(D)=
(E)=
(F)=

No.	Lev.	Parts No.	Description	Q'ty (A)	(B)	(C)	(D)	(E)	(F)	I	R
1	1	729508-01560	BLOCK ASSY, CYLINDER	1							
4	3	124160-01910	PLUG, PT1/4	2							
5	3	171051-01921	PLUG, NPTF1	1							
6	3	129150-02020	BOLT, METAL CAP	10							
9	3	124060-01050	PLUG, PT1/8	1							
10	3	129001-01250	PLUG, 50	1							
11	3	27241-120000	PLUG, 12	2							
12	3	27241-300000	PLUG 30	8							
13	3	129795-02411	BUSH, CAMSHAFT	1							
14	3	124160-01910	PLUG, PT1/4	1							
24	2	129001-02930	BEARING, MAIN	5							3
27	2	129150-02930	BEARING, THRUST	2							
30	1	129150-01200	BOLT, HEAD	18							
31	1	129508-01330	GASKET, HEAD	1							
32	1	129004-01190	SPACER	1							
33	1	129150-02870	BEARING, 0.25 US	5							1
36	1	129150-02940	BEARING, THRUST 0.25	1							2

Remarks
(1)UNDER SIZED(U.S.=0.25)PART.
(2)OVER SIZED(O.S.=0.25)PART.
(3)REPAIR PART.

N:Old ←Yes/No→ New. Q:Old ←No/Yes→ New. R:Old ←Yes/Yes→ New. S:Old ←No/No→ New. W:Add. Z:Discontinued. F:Interchangeable by set. K:Q'ty Change

Copyright (C) YANMAR CO., LTD. All RightsReserved.

Fig.2. GEAR HOUSING

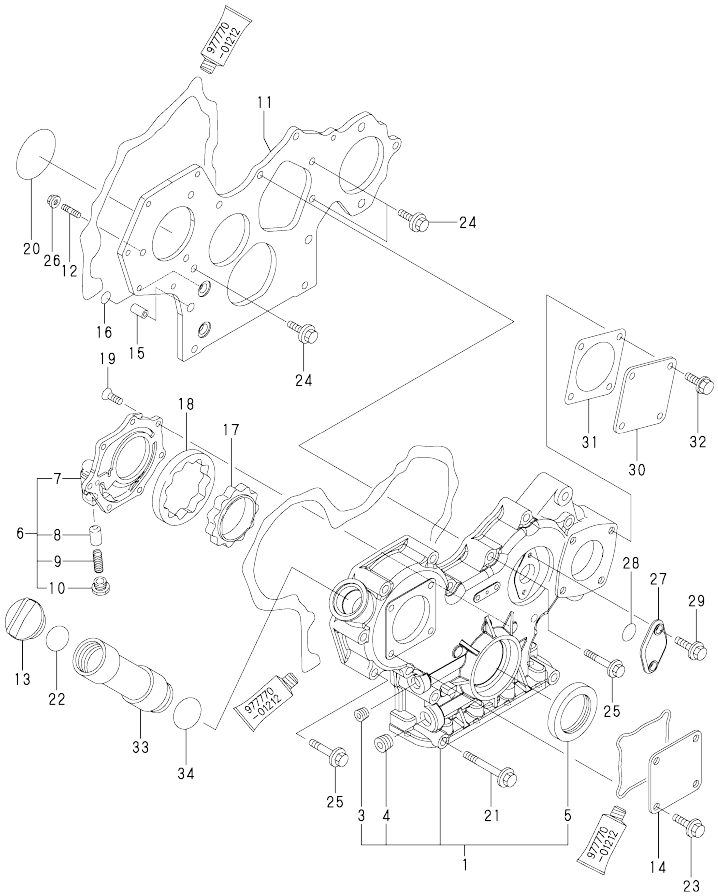

(A)=4TNV84T-XWA
(B)=
(C)=
(D)=
(E)=
(F)=

No.	Lev.	Parts No.	Description	Q'ty (A)	(B)	(C)	(D)	(E)	(F)	I	R
1	1	729508-01520	CASE ASSY, GEAR	1							
3	3	23876-030000	PLUG, R03	1							
4	3	23876-040000	PLUG, R04	1							
5	2	129795-01800	SEAL, OIL	1							
6	1	119802-32100	COVER ASSY	1							
7	2	119802-32070	COVER	1							
8	2	129900-32130	VALVE, RELIEF	1							
9	2	129418-32320	SPRING	1							
10	2	129001-32330	PLUG	1							
11	1	129005-01520	FLANGE, GEAR CASE	1							
12	1	119802-01560	STUD, M8X25	3							
13	1	124160-01751	COVER, FILLER	1							
14	1	124240-01871	COVER	1							
15	1	129795-01950	PIPE, KNOCK L=18	2							
16	1	119609-32040	O-RING, P16	4							
17	1	129508-32111	ROTOR, INNER	1							
18	1	129508-32120	ROTOR, OUTER	1							
19	1	119802-32130	SCREW, M6X16	7							
20	1	121850-51960	O-RING	1							
21	1	129001-91841	BOLT, M8X85	3							
22	1	24311-000320	O-RING, 1AP32.0	1							
23	1	26106-080162	BOLT, M8X 16 PLATED	4							
24	1	26106-080162	BOLT, M8X 16 PLATED	3							
25	1	26106-080552	BOLT, M8X 55 PLATED	11							
26	1	26306-080002	NUT, M8	3							
27	1	121023-01550	COVER	1							
28	1	24341-000240	O-RING, 1AS24.0	1							
29	1	26106-060162	BOLT, M6X 16 PLATED	2							
30	1	124240-01871	COVER	1							
31	1	124240-01883	GASKET	1							
32	1	26106-080122	BOLT, M8X 12 PLATED	4							
33	1	171031-11741	PIPE	1							
34	1	24311-000320	O-RING, 1AP32.0	1							

N:Old ←Yes/No→ New. Q:Old ←No/Yes→ New. R:Old ←Yes/Yes→ New. S:Old ←No/No→ New. W:Add. Z:Discontinued. F:Interchangeable by set. K:Q'ty Change

Copyright (C) YANMAR CO., LTD. All RightsReserved.

Fig.3. FLYWHEEL HOUSING & OIL SUMP

(A)=4TNV84T-XWA
(B)=
(C)=
(D)=
(E)=
(F)=

No.	Lev.	Parts No.	Description	Q'ty (A)	(B)	(C)	(D)	(E)	(F)	I	R
1	1	129100-01580	PIN, M8X16	2							
2	1	129612-01600	HOUSING, FLYWHEEL	1							
3	1	119620-01750	CAP	1							
4	1	26206-100252	BOLT, M10X 25 PLATED	6							
5	1	26206-100302	BOLT, M10X 30 PLATED	4							
6	1	129400-01730	SPACER, OIL SUMP	1							
7	1	129400-01770	SUMP ASSY, OIL	1							
7-1	1	129688-01780	OIL PAN ASSY, DEEP	1						N	1
	(A=REF. TO R)										
8	2	119640-01640	PLUG, DRAIN M22	1							
10	2	22190-220002	WASHER, SEAL 22	1							
11	1	26106-080162	BOLT, M8X 16 PLATED	4							
12	1	26106-080252	BOLT, M8X 25 PLATED	2							
13	1	26106-080452	BOLT, M8X 45 PLATED	24							
13-1	1	26106-080452	BOLT, M8X 45 PLATED	20						K	
	(A=FROM 1ST)										
14	1	129100-01580	PIN, M8X16	2							
15	1	129100-01640	CASE ASSY, OIL SEAL	1							
16	2	129150-01650	CASE, OIL SEAL	1							
17	2	129795-01780	SEAL, OIL	1							
18	1	129486-01670	BOLT, M8X30	6							
19	1	26106-080352	BOLT, M8X 35 PLATED	3							
20	1	26106-080502	BOLT, M8X 50 PLATED	4						W	
	(A=FROM 1ST)										

Remarks
(1)For repair.

N:Old ◄Yes/No► New. Q:Old ◄No/Yes► New. R:Old ◄Yes/Yes► New. S:Old ◄No/No► New. W:Add. Z:Discontinued. F:Interchangeable by set. K:Q'ty Change

Copyright (C) YANMAR CO., LTD. All RightsReserved.

Fig.4. CYLINDER HEAD & BONNET

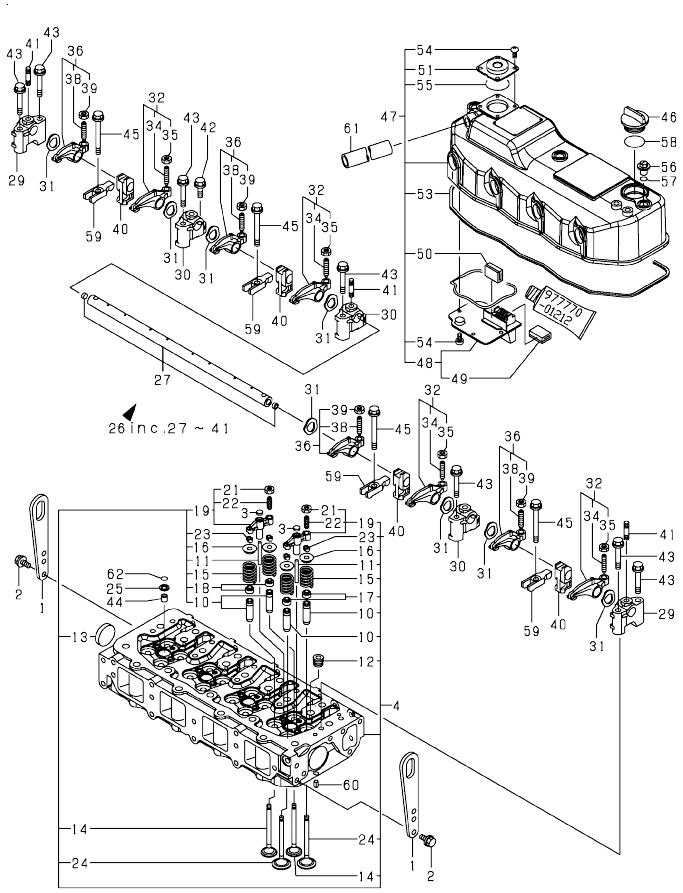

(A)=4TNV84T-XWA
(B)=
(C)=
(D)=
(E)=
(F)=

No.	Lev.	Parts No.	Description	Q'ty (A)	(B)	(C)	(D)	(E)	(F)	I	R
1	1	129900-07900	LIFTER	2							
2	1	26106-080142	BOLT, M8X 14 PLATED	4							
3	1	129508-11840	SEAT, VALVE BRIDGE	8							
4	1	129508-11700	HEAD ASSY, CYLINDER	1							
10	3	119717-11800	GUIDE, VALVE	16							1
11	3	129508-11820	GUIDE	8							
12	3	23876-020000	PLUG, R02	4							
13	3	27241-400000	PLUG, 40	2							
14	2	129508-11110	VALVE, EXHAUST	8							
15	2	129508-11130	SPRING, VALVE	16							
16	2	129508-11180	RETAINER, SPRING	16							
17	2	119717-11340	SEAL, VALVE STEM	8							
18	2	119717-11350	SEAL, VALVE STEM	8							
19	2	129508-11800	BRIDGE ASSY, VALVE	8							
21	3	129150-11750	NUT, M8	8							
22	3	123907-11830	ADJUSTER	8							
23	2	119717-11190	COTTER	32							
24	2	129508-11100	VALVE, INTAKE	8							
25	1	119625-11880	SEAT, NOZZLE	4							
26	1	129508-11241	SHAFT ASSY, ROCKER	1							
27	2	129508-11250	SHAFT, ROCKER ARM	1							
29	2	129508-11260	SUPPORT, ROCKER ARM	2							
30	2	129508-11270	SUPPORT, ROCKER ARM	3							
31	2	129508-11280	WASHER	8							
32	2	129508-11650	ARM, ROCKER	4							
34	3	129150-11230	SCREW, VALVE ADJUST	4							
35	3	129150-11750	NUT, M8	4							
36	2	129508-11660	ARM, ROCKER	4							
38	3	129150-11230	SCREW, VALVE ADJUST	4							
39	3	129150-11750	NUT, M8	4							
40	2	129508-11920	RETAINER	4							
41	2	26226-080352	STUD, M8X 35	3							
42	1	26106-080252	BOLT, M8X 25 PLATED	3							
43	1	26106-080502	BOLT, M8X 50 PLATED	7							
44	1	119802-11870	PROTECTOR, NOZZLE	4							
45	1	129907-11950	BOLT, M8X75	4							
46	1	124160-01751	COVER, FILLER	1							
47	1	129508-11350	BONNET ASSY, HEAD	1							
48	2	129508-03010	PLATE	1							
49	3	119802-03070	BAFFLE, BREATHER	1							
50	2	129150-03070	BAFFLE, BREATHER	1							
51	2	129006-03120	COVER, DIAPHRAGM	1							
53	2	129508-11310	GASKET, BONNET	1							
54	2	22857-500100	SCREW, 5X10	8							
55	2	24341-000400	O-RING, 1AS40.0	1							
56	1	124160-11360	KNOB	3							
57	1	24311-000120	O-RING, 1AP12.0	3							
58	1	24311-000320	O-RING, 1AP32.0	1							
59	1	129508-11900	RETAINER, NOZZLE	4							
60	1	22351-060012	PIN, SPRING 6.0X12	2							
61	1	129150-03090	HOSE, ID16X2T	1							

Remarks
(1)REPAIR PART.

N:Old ←Yes/No→ New. Q:Old ←No/Yes→ New. R:Old ←Yes/Yes→ New. S:Old ←No/No→ New. W:Add. Z:Discontinued. F:Interchangeable by set. K:Q'ty Change

++ CONTINUE ++

Copyright (C) YANMAR CO., LTD. All RightsReserved.

Fig.4. CYLINDER HEAD & BONNET

(A)=4TNV84T-XWA
(B)=
(C)=
(D)=
(E)=
(F)=

No.	Lev.	Parts No.	Description	Q'ty (A)	(B)	(C)	(D)	(E)	(F)	I	R
62	1	24311-000120	O-RING, 1AP12.0	4							

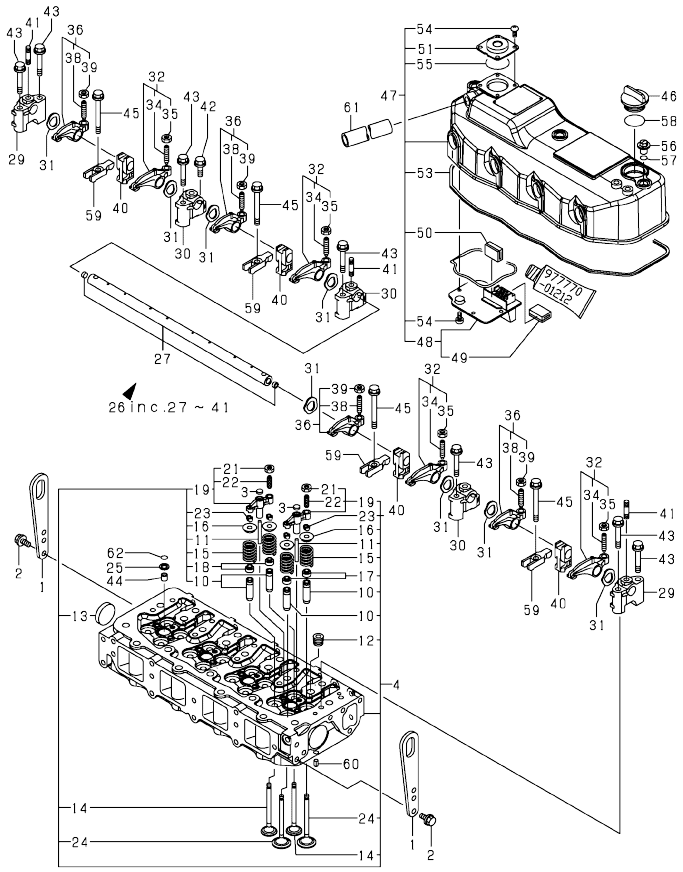

Remarks
(1)REPAIR PART.

N:Old ←Yes/No→ New. Q:Old ←No/Yes→ New. R:Old ←Yes/Yes→ New. S:Old ←No/No→ New. W:Add. Z:Discontinued. F:Interchangeable by set. K:Q'ty Change

Copyright (C) YANMAR CO., LTD. All RightsReserved.

Fig.5. SUCTION MANIFOLD

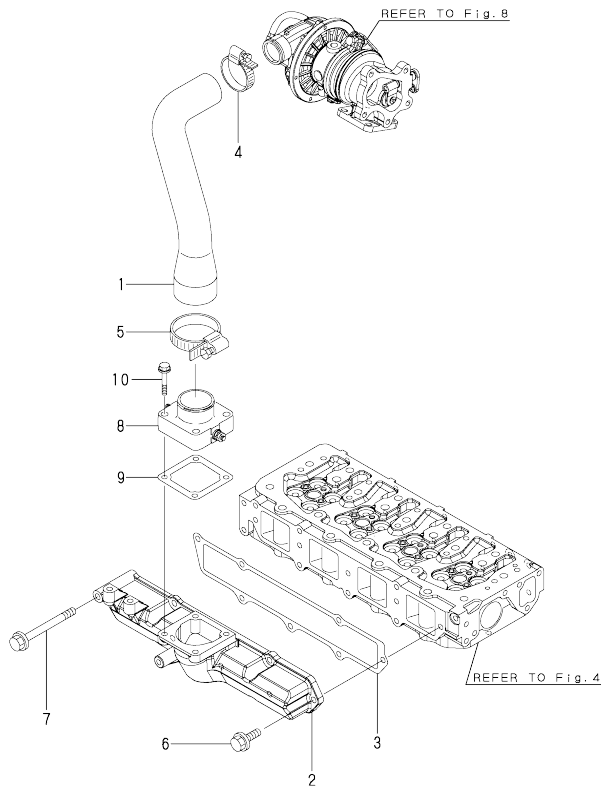

(A)=4TNV84T-XWA (D)=
(B)= (E)=
(C)= (F)=

No.	Lev.	Parts No.	Description	Q'ty (A)	(B)	(C)	(D)	(E)	(F)	I	R
1	1	129508-12070	PIPE, AIR INTAKE	1							
2	1	129508-12120	MANIFOLD, AIR INTAKE	1							
2-1	1	129508-12121	MANIFOLD,INTAKE	1							R
	(A=EZZZZZ)										
3	1	129508-12110	GASKET, MANIFOLD	1							
4	1	23000-048000	CLAMP, 48	1							
5	1	23000-060000	CLAMP, 60	1							
6	1	26106-080202	BOLT, M8X 20 PLATED	6							
7	1	26106-080802	BOLT, M8X 80 PLATED	1							
8	1	129120-77501	HEATER	1							
9	1	129150-77511	GASKET	1							
10	1	26106-080352	BOLT, M8X 35 PLATED	4							

N:Old ←Yes/No→ New. Q:Old ←No/Yes→ New. R:Old ←Yes/Yes→ New. S:Old ←No/No→ New. W:Add. Z:Discontinued. F:Interchangeable by set. K:Q'ty Change

Copyright (C) YANMAR CO., LTD. All RightsReserved.

Fig.6. EXHAUST MANIFOLD

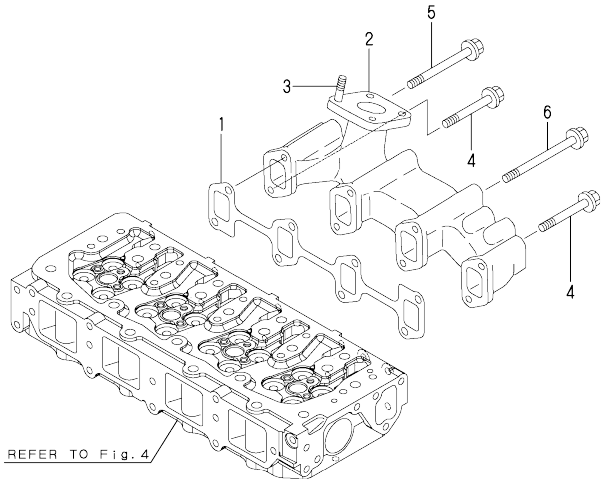

(A)=4TNV84T-XWA (D)=
(B)= (E)=
(C)= (F)=

No.	Lev.	Parts No.	Description	Q'ty (A)	(B)	(C)	(D)	(E)	(F)	I	R
1	1	129550-13110	GASKET	1							
2	1	129403-13120	MANIFOLD, EXHAUST	1							
3	1	119131-18320	STUD, M8X22	4							
4	1	119802-13650	BOLT, M8X65	3							
5	1	119802-13670	BOLT, M8X85	1							
6	1	129693-44310	BOLT	4							
6-1	1	119802-13820	BOLT, M8X100 9.8T	4						N	
	(A=*2009.12)										

N:Old ←Yes/No→ New. Q:Old ←No/Yes→ New, R:Old ←Yes/Yes→ New. S:Old ←No/No→ New. W:Add. Z:Discontinued. F:Interchangeable by set. K:Q'ty Change

Copyright (C) YANMAR CO., LTD. All RightsReserved.

Fig.7. CAMSHAFT & DRIVING GEAR

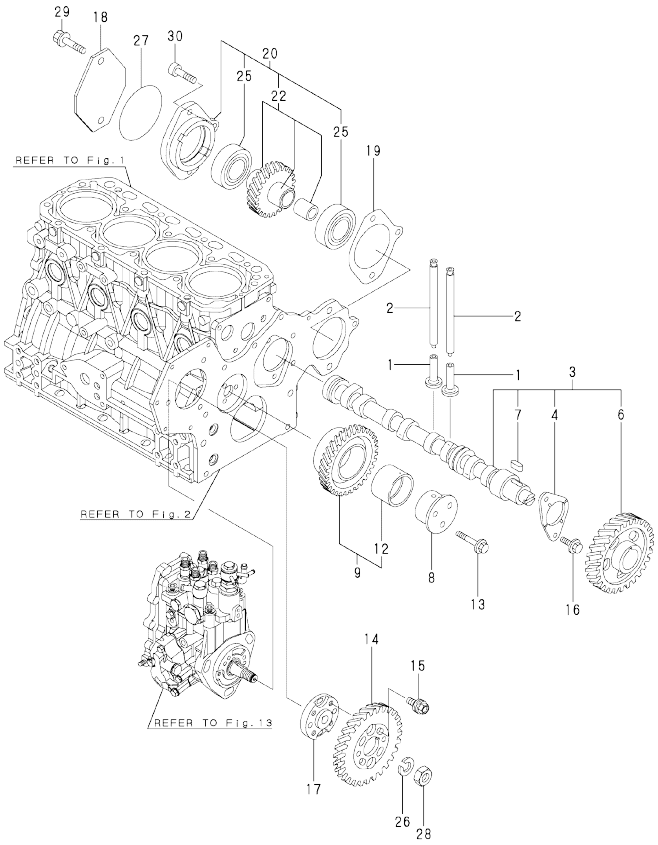

(A)=4TNV84T-XWA (D)=
(B)= (E)=
(C)= (F)=

No.	Lev.	Parts No.	Description	Q'ty (A)	(B)	(C)	(D)	(E)	(F)	I	R
1	1	129150-14200	TAPPET	8							
2	1	129150-14400	ROD, PUSH L=178	8							
3	1	129508-14580	CAMSHAFT ASSY	1							
4	2	129150-02450	BEARING, THRUST	1							
6	2	129150-14101	GEAR, CAMSHAFT	1							
7	2	22512-070140	KEY, 7X 14	1							
8	1	119802-25051	SHAFT, IDLE	1							
9	1	119802-25100	GEAR ASSY, IDLE	1							
12	2	119802-25070	BUSH, IDLE GEAR	1							1
13	1	26106-080402	BOLT, M8X 40 PLATED	3							
14	1	119802-25901	GEAR, PUMP	1							
15	1	129150-25301	BOLT	4							
16	1	26106-080142	BOLT, M8X 14 PLATED	2							
17	1	158552-51151	FLANGE	1							
18	1	121023-26070	COVER	1							
19	1	171353-26081	GASKET	1							
20	1	129484-26200	DRIVE ASSY, PUMP	1							
22	2	129484-26210	GEAR ASSY	1							
25	2	24105-060064	BEARING, BALL 6006Z	2							
26	1	22217-140000	WASHER, SPRING 14	1							
27	1	24321-000850	O-RING, 1AG85.0	1							
28	1	26776-140002	NUT, LOCK M14	1							
29	1	26106-100452	BOLT, M10X 45 PLATED	2							
30	1	26450-080282	BOLT, M8X 28	1							

Remarks
(1)REPAIR PART.

N:Old $\frac{\text{Yes}}{\text{No}}$ New. Q:Old $\frac{\text{No}}{\text{Yes}}$ New. R:Old $\frac{\text{Yes}}{\text{Yes}}$ New. S:Old $\frac{\text{No}}{\text{No}}$ New. W:Add. Z:Discontinued. F:Interchangeable by set. K:Q'ty Change

Copyright (C) YANMAR CO., LTD. All RightsReserved.

Fig.8. TURBOCHARGER

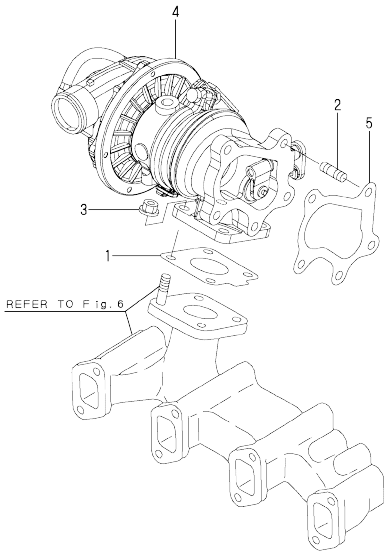

(A)=4TNV84T-XWA (D)=
(B)= (E)=
(C)= (F)=

No.	Lev.	Parts No.	Description	Q'ty (A)	(B)	(C)	(D)	(E)	(F)	I	R
1	1	129508-18080	GASKET	1							
2	1	129418-18320	STUD, M8X20	5							
3	1	26306-080002	NUT, M8	5							
4	1	129508-18010	TURBINE, RHF4	1							
5	1	129508-18090	GASKET	1							

N:Old ←Yes/No→ New. Q:Old ←No/Yes→ New. R:Old ←Yes/Yes→ New. S:Old ←No/No→ New. W:Add. Z:Discontinued. F:Interchangeable by set. K:Q'ty Change

Copyright (C) YANMAR CO., LTD. All RightsReserved.

Fig.9. CRANKSHAFT & PISTON

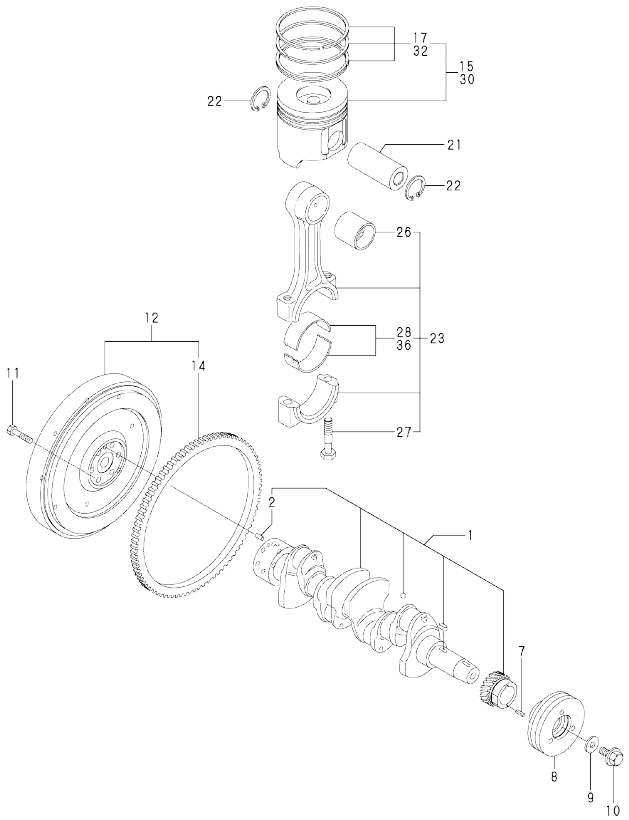

(A)=4TNV84T-XWA (D)=
(B)= (E)=
(C)= (F)=

No.	Lev.	Parts No.	Description	Q'ty (A)	(B)	(C)	(D)	(E)	(F)	I	R
1	1	129508-21002	CRANKSHAFT ASSY	1							
2	2	129100-01580	PIN, M8X16	1							
7	1	22351-030010	PIN, SPRING 3.0X10	1							
8	1	119802-21660	V-PULLEY, 120	1							
9	1	129795-21661	WASHER	1							
10	1	121850-21680	BOLT	1							
11	1	121111-21501	BOLT, FLYWHEEL	6							
12	1	171420-21580	FLYWHEEL ASSY	1							
14	2	119865-21600	GEAR, RING	1							
15	1	129508-22080	PISTON ASSY	4							
17	2	129004-22500	RING SET, PISTON	4							
21	1	129202-22300	PIN, PISTON D26 L70	4							
22	1	22252-000260	RING, 26	8							
23	1	729402-23100	ROD ASSY, CONNECTING	4							
26	2	129100-23910	BEARING, PISTON PIN	4							1
27	2	121550-23200	BOLT, CONNECTING ROD	8							
28	2	129150-23600	BEARING, CRANK PIN	4							
30	1	129508-22900	PISTON ASSY, 0.25 OS	4							2
32	2	129004-22950	RING SET, 0.25 OS	4							2
36	1	129150-23610	BEARING, 0.25 US	4							3

Remarks
(1)REPAIR PART.
(2)OVER SIZED(O.S.=0.25)PART.
(3)UNDER SIZED(U.S.=0.25)PART.

N:Old ←Yes/No→ New. Q:Old ←No/Yes→ New. R:Old ←Yes/Yes→ New. S:Old ←No/No→ New. W:Add. Z:Discontinued. F:Interchangeable by set. K:Q'ty Change

Copyright (C) YANMAR CO., LTD. All RightsReserved.

Fig.10. LUB. OIL SYSTEM

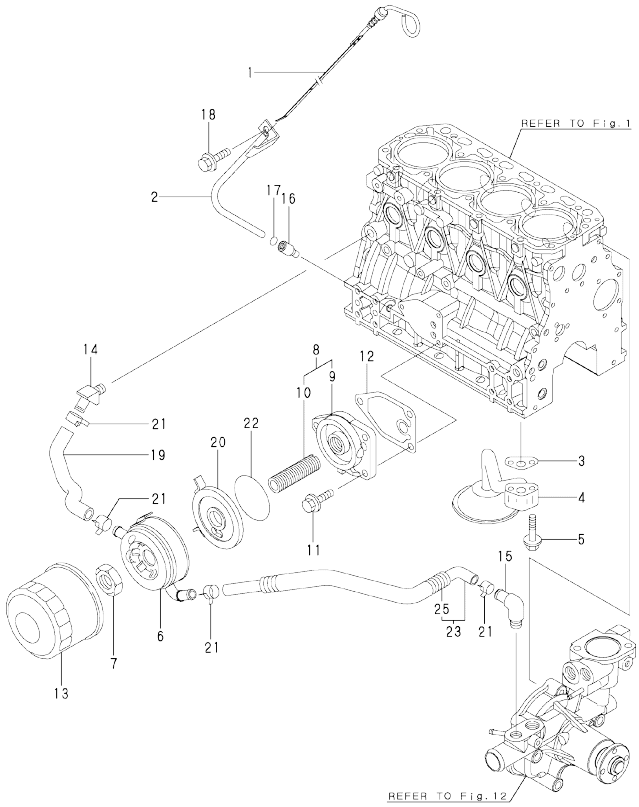

(A)=4TNV84T-XWA (D)=
(B)= (E)=
(C)= (F)=

No.	Lev.	Parts No.	Description	Q'ty (A)	(B)	(C)	(D)	(E)	(F)	I	R
1	1	129601-34801	DIPSTICK, OIL	1							
2	1	119802-34850	GUIDE, DIPSTICK	1							
3	1	129150-35041	GASKET	1							
4	1	129436-35091	PIPE ASSY, OIL INLET	1							
5	1	26106-080352	BOLT, M8X 35 PLATED	2							
6	1	123962-33010	COOLER ASSY, OIL	1							
7	1	129417-33110	NUT	1							
8	1	129648-35100	BRACKET ASSY, FILTER	1							
9	2	119802-35110	BRACKET, FILTER	1							
10	2	129648-35150	STUD	1							
11	1	26106-080202	BOLT, M8X 20 PLATED	3							
12	1	129150-35111	GASKET	1							
13	1	129150-35153	FILTER	1							1
14	1	129648-44400	JOINT, PT1/4	1							
15	1	129103-49301	ELBOW, PT1/4	1							
16	1	119260-34810	GUIDE, DIPSTICK	1							
17	1	24311-240100	O-RING, 1AP10A	1							
18	1	26106-080162	BOLT, M8X 16 PLATED	1							
19	1	129648-49040	PIPE, WATER	1							
20	1	129648-33100	BRACKET, COOLER	1							
21	1	23000-025000	CLAMP, 25	4							
22	1	24321-000600	O-RING, 1AG60.0	1							
23	1	123910-49600	PIPE, WATER	1							
25	2	123910-49610	TUBE, CORRUGATED	1							

Remarks
(1) REPAIR PART.

N:Old $\xleftarrow[\text{No}]{\text{Yes}}$ New. Q:Old $\xleftarrow[\text{Yes}]{\text{No}}$ New, R:Old $\xleftarrow[\text{Yes}]{\text{Yes}}$ New, S:Old $\xleftarrow[\text{No}]{\text{No}}$ New, W:Add, Z:Discontinued, F:Interchangeable by set, K:Q'ty Change

Copyright (C) YANMAR CO., LTD. All RightsReserved.

Fig.11. LUB. OIL PIPE

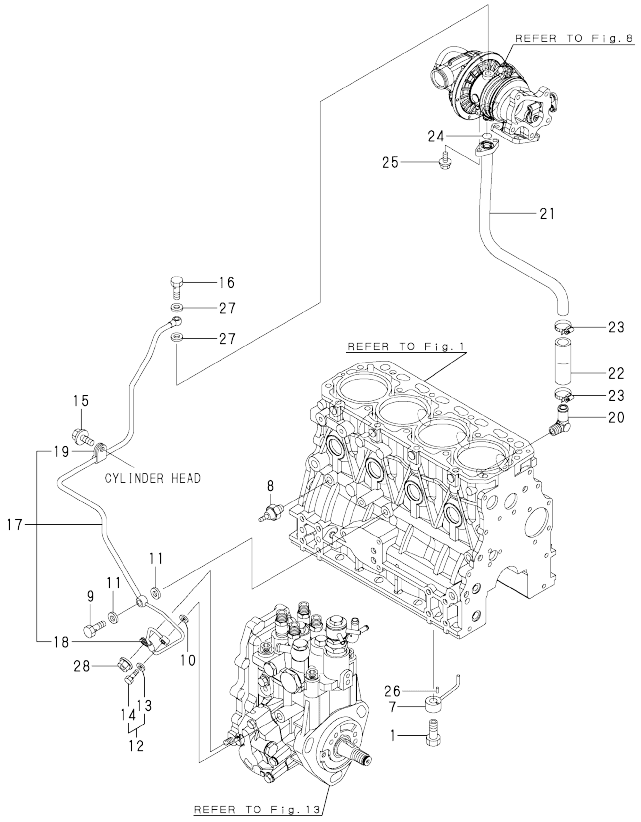

(A)=4TNV84T-XWA (D)=
(B)= (E)=
(C)= (F)=

No.	Lev.	Parts No.	Description	Q'ty (A)	(B)	(C)	(D)	(E)	(F)	I	R
1	1	129792-39410	VALVE ASSY, CHECK	4							
7	1	129553-39650	NOZZLE	4							
8	1	114250-39450	SWITCH, 0.5KG	1							
9	1	124160-39140	BOLT, PIPE JOINT M10	1							
10	1	22190-080002	WASHER, SEAL 6	1							
11	1	22190-100002	WASHER, SEAL 10	2							
12	1	129005-59830	BOLT ASSY, JOINT M8	1							
13	2	22190-080002	WASHER, SEAL 6	1							
14	2	23857-030000	BOLT, JOINT 3	1							
15	1	26106-080122	BOLT, M8X 12 PLATED	1							
16	1	121252-39150	BOLT, JOINT M10X1.5	1							
17	1	129508-39450	PIPE ASSY, OIL	1							
18	2	119802-39500	RETAINER, PIPE	1							
19	2	124223-39900	RETAINER	1							
20	1	124070-13300	ELBOW, PT3/8	1							
21	1	129508-39600	PIPE, OIL	1							
22	1	123901-39820	HOSE	1							
23	1	23000-025000	CLAMP, 25	2							
24	1	24314-000160	O-RING, 4CP16.0	1							
25	1	26106-060162	BOLT, M6X 16 PLATED	2							
26	1	22351-030010	PIN, SPRING 3.0X10	4							
27	1	23414-100000	GASKET, 10X1.0	2							
28	1	26366-060002	NUT, M6	1							

N:Old ←Yes/No→ New. Q:Old ←No/Yes→ New, R:Old ←Yes/Yes→ New, S:Old ←No/No→ New, W:Add, Z:Discontinued, F:Interchangeable by set, K:Q'ty Change

Copyright (C) YANMAR CO., LTD. All RightsReserved.

Fig.12. COOLING WATER SYSTEM

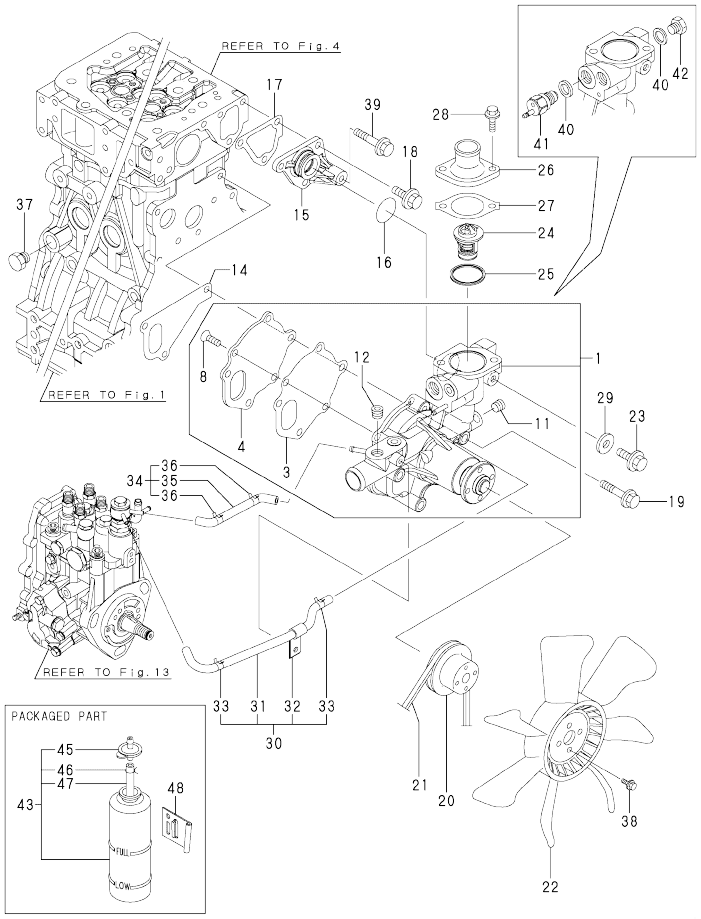

(A)=4TNV84T-XWA
(B)=
(C)=
(D)=
(E)=
(F)=

No.	Lev.	Parts No.	Description	Q'ty (A)	(B)	(C)	(D)	(E)	(F)	I	R
1	1	129508-42001	PUMP ASSY, WATER	1							
3	2	129100-42051	GASKET, WATER PUMP	1							
4	2	129100-42121	PLATE	1							
8	2	121850-42410	SCREW	3							
11	2	23876-010000	PLUG, R01	1							
12	2	23876-020000	PLUG, R02	1							
14	1	129486-42021	GASKET, WATER PUMP	1							
15	1	129004-42040	JOINT	1							
16	1	129486-42140	O-RING, G30	1							
17	1	124395-49840	GASKET	1							
18	1	26106-080162	BOLT, M8X 16 PLATED	3							
19	1	26106-080602	BOLT, M8X 60 PLATED	3							
20	1	129556-42350	V-PULLEY, 96	1							
21	1	25132-003600	V-BELT, A36	1							
22	1	129655-44740	FAN, COOLING D380	1							
23	1	26106-080122	BOLT, M8X 12 PLATED	1							
24	1	129155-49801	THERMOSTAT, 71	1							
25	1	129150-49811	GASKET, THERMOSTAT	1							
26	1	129350-49530	COVER, THERMOSTAT	1							
27	1	129795-49551	GASKET	1							
28	1	26106-080222	BOLT, M8X 22 PLATED	2							
29	1	23414-080000	GASKET, 8X1.0	1							
30	1	129004-49610	PIPE ASSY, WATER	1							
31	2	129004-49711	PIPE ASSY, WATER	1							
32	2	119802-49730	RETAINER, PIPE	1							
33	2	124722-59050	CLIP, HOSE 9	2							
34	1	129004-49620	PIPE ASSY, WATER	1							
35	2	129004-49721	PIPE ASSY, WATER	1							
36	2	124722-59050	CLIP, HOSE 9	2							
37	1	171056-49120	PLUG, DRAIN	1							
38	1	26106-060122	BOLT, M6X 12 PLATED	4							
39	1	26106-080452	BOLT, M8X 45 PLATED	1							
40	1	124465-44950	GASKET, 16	2							
41	1	121250-44901	SWITCH, 110	1							
42	1	121450-42450	PLUG, M16	1							
43	1	124450-44510	TANK ASSY, SUB	1							
45	2	124450-44530	CAP	1							
46	2	124450-44560	RETAINER	1							
47	2	23061-070230	PIPE, 7X 230	1							
48	1	121256-44600	BRACKET, SUB TANK	1							

N:Old ◄Yes/No► New. Q:Old ◄No/Yes► New. R:Old ◄Yes/Yes► New. S:Old ◄No/No► New. W:Add. Z:Discontinued. F:Interchangeable by set. K:Q'ty Change

Copyright (C) YANMAR CO., LTD. All RightsReserved.

Fig.13. FUEL INJECTION PUMP

(A)=4TNV84T-XWA
(B)=
(C)=
(D)=
(E)=
(F)=

No.	Lev.	Parts No.	Description	Q'ty (A)	(B)	(C)	(D)	(E)	(F)	I	R
1	1	26106-080302	BOLT, M8X 30 PLATED	1							
2	1	26106-080202	BOLT, M8X 20 PLATED	1							
3	1	129508-51250	RETAINER, PUMP	1							
4	1	729648-51330	PUMP ASSY, INJECTION	1							

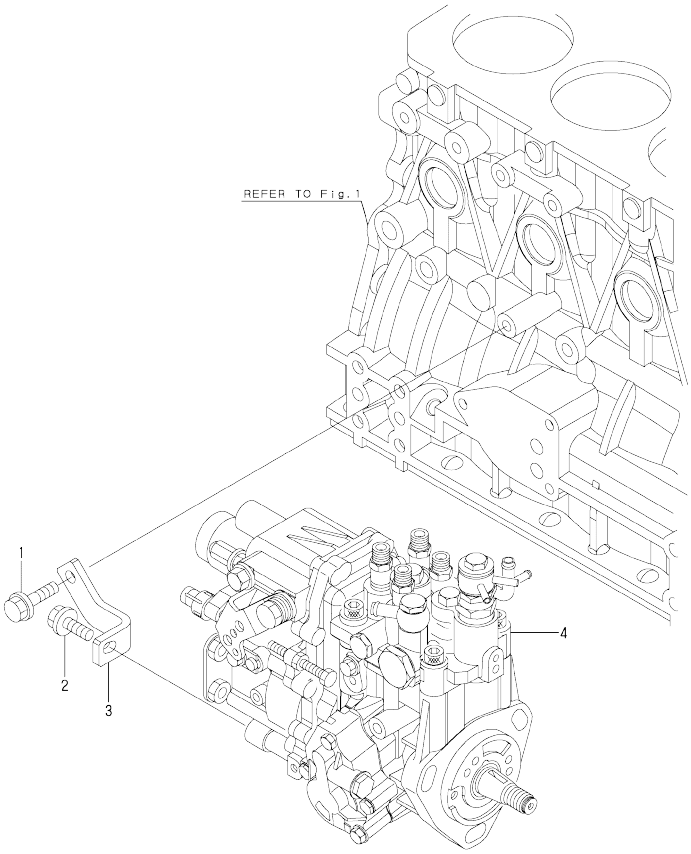

N:Old ◄Yes/No► New. Q:Old ◄No/Yes► New. R:Old ◄Yes/Yes► New. S:Old ◄No/No► New. W:Add. Z:Discontinued. F:Interchangeable by set. K:Q'ty Change

Copyright (C) YANMAR CO., LTD. All RightsReserved.

Fig.14. FUEL INJECTION VALVE

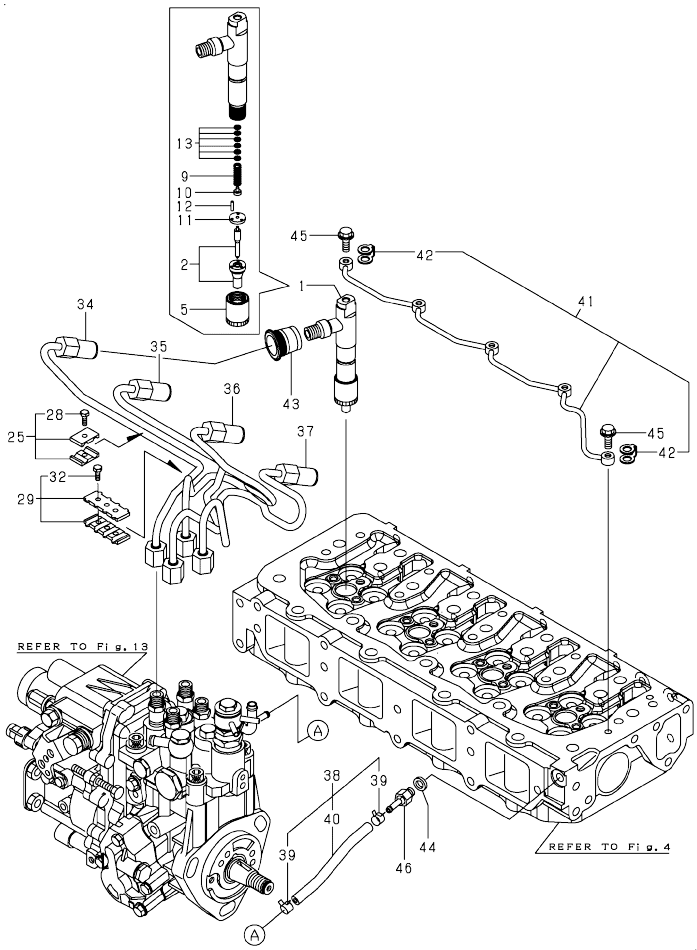

(A)=4TNV84T-XWA (D)=
(B)= (E)=
(C)= (F)=

No.	Lev.	Parts No.	Description	Q'ty (A)	(B)	(C)	(D)	(E)	(F)	I	R
1	1	729648-53100	VALVE ASSY,INJECTION	4							
2	2	129508-53000	VALVE ASSY,INJECTION	4							
5	2	114250-53080	NUT, NOZZLE D16.95	4							
9	2	114250-53120	SPRING, NOZZLE	4							
10	2	114250-53130	SEAT, SPRING	4							
11	2	114250-53140	PLATE	4							
12	2	114250-53210	PIN	8							
13	2	114250-53400	SHIM SET	4							
25	1	119305-59120	RETAINER, PIPE	2							
28	2	129150-59131	BOLT, M4X14	2							
29	1	129550-59120	RETAINER, PIPE	1							
32	2	129150-59131	BOLT, M4X14	2							
34	1	129508-59910	PIPE ASSY, INJECTION	1							
35	1	129508-59920	PIPE ASSY, INJECTION	1							
36	1	129508-59930	PIPE ASSY, INJECTION	1							
37	1	129508-59940	PIPE ASSY, INJECTION	1							
38	1	129508-59570	PIPE ASSY, RETURN	1							
39	2	124722-59050	CLIP, HOSE 9	2							
40	2	129508-59510	PIPE, FUEL RETURN	1							
41	1	129508-59550	PIPE ASSY, RETURN	1							
42	2	123907-59550	GASKET	5							
43	1	123907-11601	SEAL	4							
44	1	22190-080002	WASHER, SEAL 6	1							
45	1	123907-59540	BOLT, PIPE JOINT M6	5							
46	1	123907-59560	JOINT	1							

N:Old $\frac{\text{Yes}}{\text{No}}$ New. Q:Old $\frac{\text{No}}{\text{Yes}}$ New. R:Old $\frac{\text{Yes}}{\text{Yes}}$ New. S:Old $\frac{\text{No}}{\text{No}}$ New. W:Add. Z:Discontinued. F:Interchangeable by set. K:Q'ty Change

Copyright (C) YANMAR CO., LTD. All RightsReserved.

Fig.15. FUEL PIPE

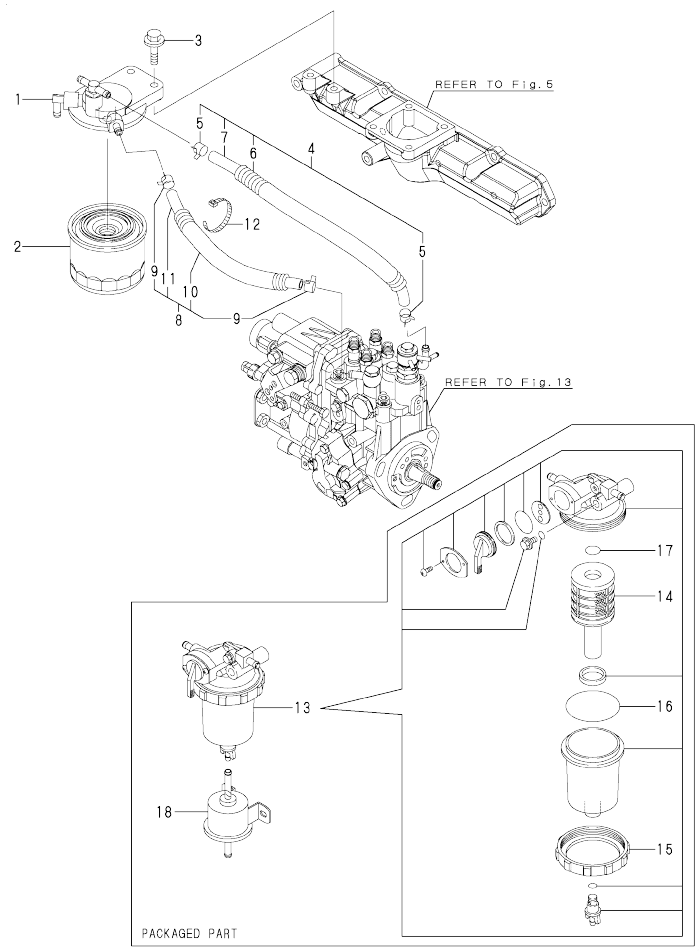

(A)=4TNV84T-XWA (D)=
(B)= (E)=
(C)= (F)=

No.	Lev.	Parts No.	Description	Q'ty (A)	(B)	(C)	(D)	(E)	(F)	I	R
1	1	129004-55610	BRACKET, FILTER	1							
2	1	119802-55800	FILTER, FUEL	1							
3	1	26106-080302	BOLT, M8X 30 PLATED	2							
4	1	129981-59010	PIPE ASSY, FUEL	1							
5	2	124766-59050	CLIP, HOSE 12	2							
6	2	129950-59221	TUBE, CORRUGATED	1							
7	2	129980-59510	PIPE, FUEL	1							
8	1	129950-59311	PIPE, FUEL	1							
9	2	124766-59050	CLIP, HOSE 12	2							
10	2	129961-59110	TUBE, CORRUGATED	1							
11	2	105025-59580	PIPE, FUEL	1							
12	1	121750-59890	BAND, 140	1							
13	1	119802-55700	SEPARATOR ASSY	1							
14	2	119802-55710	ELEMENT	1							
15	2	129100-55690	RING, RETAINING	1							
16	2	24321-000650	O-RING, 1AG65.0	1							
17	2	24311-000160	O-RING, 1AP16.0	1							
18	1	119225-52102	PUMP ASSY, FUEL FEED	1							

N:Old ←Yes/No→ New. Q:Old ←No/Yes→ New. R:Old ←Yes/Yes→ New. S:Old ←No/No→ New. W:Add. Z:Discontinued. F:Interchangeable by set. K:Q'ty Change

Copyright (C) YANMAR CO., LTD. All RightsReserved.

Fig.16. STARTING MOTOR

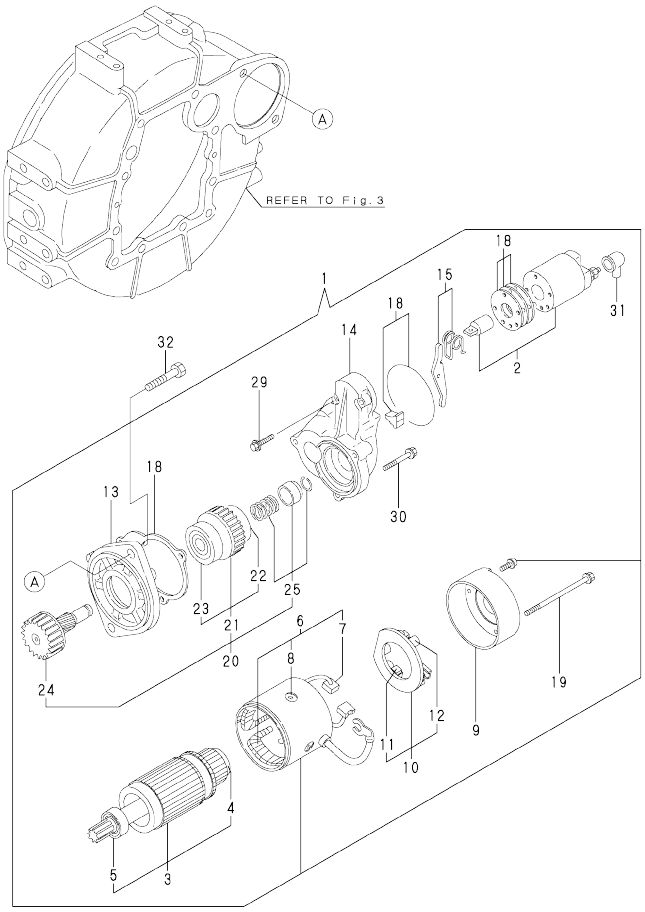

(A)=4TNV84T-XWA
(B)=
(C)=
(D)=
(E)=
(F)=

No.	Lev.	Parts No.	Description	Q'ty (A)	(B)	(C)	(D)	(E)	(F)	I	R
1	1	129136-77011	STARTER	1							
2	2	129136-77310	SWITCH ASSY	1							
3	2	129900-77400	ARMATURE ASSY	1							
4	3	X2130350900	BEARING, BALL	1							
5	3	X2114255110	BEARING, BALL	1							
6	2	129900-77440	COIL ASSY, FIELD	1							
7	3	129900-77450	BRUSH	2							
8	3	171008-77450	SCREW	4							
9	2	129900-77460	COVER	1							
10	2	129900-77480	HOLDER ASSY, BRUSH	1							
11	3	129900-77500	BRUSH	2							
12	3	129400-77490	SPRING	4							
13	2	171008-77510	CASE, GEAR	1							
14	2	129136-77520	HOUSING	1							
15	2	171008-77540	LEVER SET	1							
18	2	129400-77571	COVER ASSY, DUST	1							
19	2	129900-77640	BOLT, THROUGH	2							
20	2	171008-77650	PINION ASSY	1							
21	3	X2114555500	CLUTCH ASSY	1							
22	4	X2114955020	BEARING, BALL	1							
23	4	X2240410100	BEARING, BALL	1							
24	3	171008-77660	SHAFT	1							
25	3	171008-77670	STOPPER SET	1							
29	2	26106-060322	BOLT, M6X 32 PLATED	2							
30	2	26106-060402	BOLT, M6X 40 PLATED	3							
31	2	171008-77750	COVER	1							
32	1	26116-120252	BOLT, M12X 25 PLATED	2							

N:Old ←Yes/No→ New. Q:Old ←No/Yes→ New. R:Old ←Yes/Yes→ New. S:Old ←No/No→ New. W:Add. Z:Discontinued. F:Interchangeable by set. K:Q'ty Change

Copyright (C) YANMAR CO., LTD. All RightsReserved.

Fig.17. GENERATOR

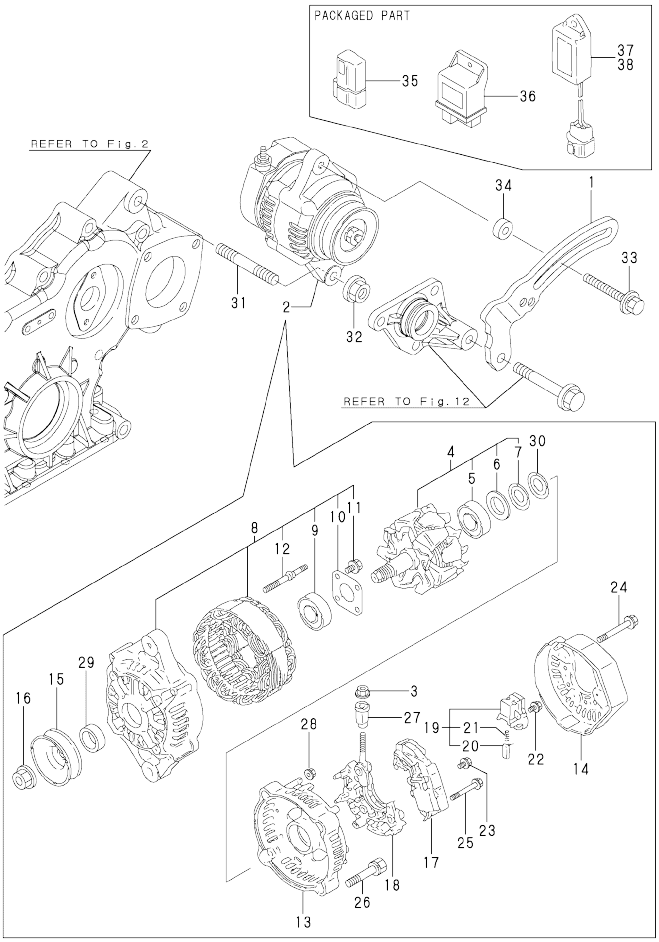

(A)=4TNV84T-XWA (D)=
(B)= (E)=
(C)= (F)=

No.	Lev.	Parts No.	Description	Q'ty (A)	(B)	(C)	(D)	(E)	(F)	I	R
1	1	129064-77330	ADJUSTER	1							
2	1	129423-77200	GENERATOR, 12V-40A	1							
3	2	X9490561001	NUT	1							
4	2	119620-77380	ROTOR ASSY	1							
5	3	119620-79240	BEARING, BALL	1							
6	3	119620-79250	COVER	1							
7	3	119620-79360	WASHER, THRUST	1							
8	2	119620-77421	FRAME ASSY, DRIVE	1							
9	3	119620-79200	BEARING, BALL	1							
10	3	119620-79210	PLATE, RETAINER	1							
11	3	119620-79220	SCREW	4							
12	3	119620-79230	STUD	2							
13	2	119620-77440	FRAME ASSY	1							
14	2	129240-79300	COVER	1							
15	2	119620-77461	PULLEY	1							
16	2	119620-77471	NUT	1							
17	2	129423-77710	REGULATOR ASSY	1							
18	2	119620-79260	HOLDER	1							
19	2	119620-79270	HOLDER, BRUSH	1							
20	3	119620-77480	BRUSH ASSY	2							
21	3	119620-79280	SPRING	2							
22	2	119620-79290	SCREW	1							
23	2	119620-79300	SCREW	1							
24	2	119620-79310	BOLT	3							
25	2	119620-79320	SCREW	2							
26	2	119620-79330	BOLT	2							
27	2	119620-79340	BUSH, INSULATION	1							
28	2	119620-79350	NUT	2							
29	2	119620-77490	COLLAR	1							
30	2	119620-79360	WASHER, THRUST	1							
31	1	129795-01900	STUD	1							
32	1	26306-100002	NUT, M10	1							
33	1	26014-080452	BOLT, M8X 45	1							
34	1	129067-77340	SPACER	1							
35	1	119643-66900	DIODE	1							
36	1	119802-77200	RELAY, SAFETY	1							
37	1	128300-77920	TIMER	1							
38	1	129211-77920	TIMER	1							

N:Old ←Yes/No→ New. Q:Old ←No/Yes→ New. R:Old ←Yes/Yes→ New. S:Old ←No/No→ New. W:Add. Z:Discontinued. F:Interchangeable by set. K:Q'ty Change

Copyright (C) YANMAR CO., LTD. All RightsReserved.

Fig.18. GASKET SET & TOOLS

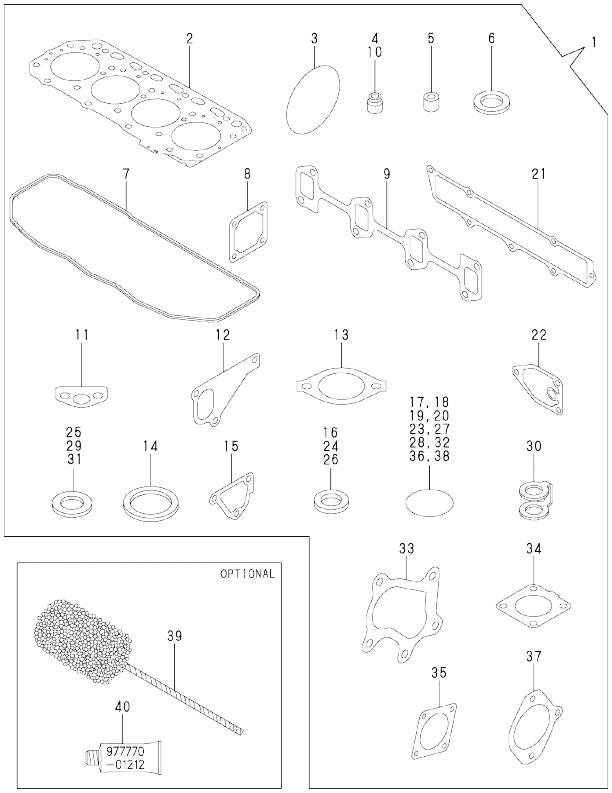

(A)=4TNV84T-XWA (D)=
(B)= (E)=
(C)= (F)=

No.	Lev.	Parts No.	Description	Q'ty (A)	(B)	(C)	(D)	(E)	(F)	I	R
1	1	729508-92620	GASKET SET	1							1
2	2	129508-01330	GASKET, HEAD	1							
3	2	121850-51960	O-RING	1							
4	2	119717-11340	SEAL, VALVE STEM	8							
5	2	119802-11870	PROTECTOR, NOZZLE	4							
6	2	119625-11880	SEAT, NOZZLE	4							
7	2	129508-11310	GASKET, BONNET	1							
8	2	129150-77511	GASKET	1							
9	2	129550-13110	GASKET	1							
10	2	119717-11350	SEAL, VALVE STEM	8							
11	2	129150-35041	GASKET	1							
12	2	129486-42021	GASKET, WATER PUMP	1							
13	2	129795-49551	GASKET	1							
14	2	129150-49811	GASKET, THERMOSTAT	1							
15	2	124395-49840	GASKET	1							
16	2	22190-080002	WASHER, SEAL 6	3							
17	2	24311-000120	O-RING, 1AP12.0	3							
18	2	24311-000320	O-RING, 1AP32.0	3							
19	2	24341-000240	O-RING, 1AS24.0	1							
20	2	129486-42140	O-RING, G30	1							
21	2	129508-12110	GASKET, MANIFOLD	1							
22	2	129150-35111	GASKET	1							
23	2	119609-32040	O-RING, P16	4							
24	2	22190-100002	WASHER, SEAL 10	2							
25	2	23414-080000	GASKET, 8X1.0	1							
26	2	22190-220002	WASHER, SEAL 22	1							
27	2	24314-000160	O-RING, 4CP16.0	1							
28	2	24311-240100	O-RING, 1AP10A	1							
29	2	23414-100000	GASKET, 10X1.0	2							
30	2	123907-59550	GASKET	5							
31	2	124465-44950	GASKET, 16	2							
32	2	24341-000400	O-RING, 1AS40.0	1							
33	2	129508-18090	GASKET	1							
34	2	129508-18080	GASKET	1							
35	2	124240-01883	GASKET	1							
36	2	24321-000850	O-RING, 1AG85.0	1							
37	2	171353-26081	GASKET	1							
38	2	24321-000600	O-RING, 1AG60.0	1							
39	1	129400-92420	HONE	1							1
40	1	977770-01212	GASKET, LIQUID	1							1

Remarks
(1)OPTIONAL

N:Old ←Yes/No→ New. Q:Old ←No/Yes→ New. R:Old ←Yes/Yes→ New. S:Old ←No/No→ New. W:Add. Z:Discontinued. F:Interchangeable by set. K:Q'ty Change

Copyright (C) YANMAR CO., LTD. All RightsReserved.

Parts No. Index

Parts No.	Fig. No.	Ref. No.
105025-59580	15	11
114250-39450	11	8
114250-53080	14	5
114250-53120	14	9
114250-53130	14	10
114250-53140	14	11
114250-53210	14	12
114250-53400	14	13
119131-18320	6	3
119225-52102	15	18
119260-34810	10	16
119305-59120	14	25
119609-32040	2	16
	18	23
119620-01750	3	3
119620-77380	17	4
119620-77421	17	8
119620-77440	17	13
119620-77461	17	15
119620-77471	17	16
119620-77480	17	20
119620-77490	17	29
119620-79200	17	9
119620-79210	17	10
119620-79220	17	11
119620-79230	17	12
119620-79240	17	5
119620-79250	17	6
119620-79260	17	18
119620-79270	17	19
119620-79280	17	21
119620-79290	17	22
119620-79300	17	23
119620-79310	17	24
119620-79320	17	25
119620-79330	17	26
119620-79340	17	27
119620-79350	17	28
119620-79360	17	7
		30
119625-11880	4	25
	18	6
119640-01640	3	8
119643-66900	17	35
119717-11190	4	23
119717-11340	4	17
	18	4
119717-11350	4	18
	18	10
119717-11800	4	10

Parts No.	Fig. No.	Ref. No.
119802-01560	2	12
119802-03070	4	49
119802-11870	4	44
	18	5
119802-13650	6	4
119802-13670	6	5
119802-13820	6	6 -1
119802-21660	9	8
119802-25051	7	8
119802-25070	7	12
119802-25100	7	9
119802-25901	7	14
119802-32070	2	7
119802-32100	2	6
119802-32130	2	19
119802-34850	10	2
119802-35110	10	9
119802-39500	11	18
119802-49730	12	32
119802-55700	15	13
119802-55710	15	14
119802-55800	15	2
119802-77200	17	36
119865-21600	9	14
121023-01550	2	27
121023-26070	7	18
121111-21501	9	11
121250-44901	12	41
121252-39150	11	16
121256-44600	12	48
121450-42450	12	42
121550-23200	9	27
121750-59890	15	12
121850-21680	9	10
121850-42410	12	8
121850-51960	2	20
	18	3
123901-39820	11	22
123907-11601	14	43
123907-11830	4	22
123907-59540	14	45
123907-59550	14	42
	18	30
123907-59560	14	46
123910-49600	10	23
123910-49610	10	25
123962-33010	10	6
124060-01050	1	9
124070-13300	11	20
124160-01751	2	13

Parts No.	Fig. No.	Ref. No.
124160-01751	4	46
124160-01910	1	4
		14
124160-11360	4	56
124160-39140	11	9
124223-39900	11	19
124240-01871	2	14
		30
124240-01883	2	31
	18	35
124395-49840	12	17
	18	15
124450-44510	12	43
124450-44530	12	45
124450-44560	12	46
124465-44950	12	40
	18	31
124722-59050	12	33
		36
	14	39
124766-59050	15	5
		9
128300-77920	17	37
129001-01250	1	10
129001-02930	1	24
129001-32330	2	10
129001-91841	2	21
129004-01190	1	32
129004-22500	9	17
129004-22950	9	32
129004-42040	12	15
129004-49610	12	30
129004-49620	12	34
129004-49711	12	31
129004-49721	12	35
129004-55610	15	1
129005-01520	2	11
129005-59830	11	12
129006-03120	4	51
129064-77330	17	1
129067-77340	17	34
129100-01580	3	1
		14
	9	2
129100-01640	3	15
129100-23910	9	26
129100-42051	12	3
129100-42121	12	4
129100-55690	15	15
129103-49301	10	15

Parts No.	Fig. No.	Ref. No.
129120-77501	5	8
129136-77011	16	1
129136-77310	16	2
129136-77520	16	14
129150-01200	1	30
129150-01650	3	16
129150-02020	1	6
129150-02450	7	4
129150-02870	1	33
129150-02930	1	27
129150-02940	1	36
129150-03070	4	50
129150-03090	4	61
129150-11230	4	34
		38
129150-11750	4	21
		35
		39
129150-14101	7	6
129150-14200	7	1
129150-14400	7	2
129150-23600	9	28
129150-23610	9	36
129150-25301	7	15
129150-35041	10	3
	18	11
129150-35111	10	12
	18	22
129150-35153	10	13
129150-49811	12	25
	18	14
129150-59131	14	28
		32
129150-77511	5	9
	18	8
129155-49801	12	24
129202-22300	9	21
129211-77920	17	38
129240-79300	17	14
129350-49530	12	26
129400-01730	3	6
129400-01770	3	7
129400-77490	16	12
129400-77571	16	18
129400-92420	18	39
129403-13120	6	2
129417-33110	10	7
129418-18320	8	2
129418-32320	2	9
129423-77200	17	2

Parts No. Index

Parts No.	Fig. No.	Ref. No.
129423-77710	17	17
129436-35091	10	4
129484-26200	7	20
129484-26210	7	22
129486-01670	3	18
129486-42021	12	14
	18	12
129486-42140	12	16
	18	20
129508-01330	1	31
	18	2
129508-03010	4	48
129508-11100	4	24
129508-11110	4	14
129508-11130	4	15
129508-11180	4	16
129508-11241	4	26
129508-11250	4	27
129508-11260	4	29
129508-11270	4	30
129508-11280	4	31
129508-11310	4	53
	18	7
129508-11350	4	47
129508-11650	4	32
129508-11660	4	36
129508-11700	4	4
129508-11800	4	19
129508-11820	4	11
129508-11840	4	3
129508-11900	4	59
129508-11920	4	40
129508-12070	5	1
129508-12110	5	3
	18	21
129508-12120	5	2
129508-12121	5	2 -1
129508-14580	7	3
129508-18010	8	4
129508-18080	8	1
	18	34
129508-18090	8	5
	18	33
129508-21002	9	1
129508-22080	9	15
129508-22900	9	30
129508-32111	2	17
129508-32120	2	18
129508-39450	11	17
129508-39600	11	21

Parts No.	Fig. No.	Ref. No.
129508-42001	12	1
129508-51250	13	3
129508-53000	14	2
129508-59510	14	40
129508-59550	14	41
129508-59570	14	38
129508-59910	14	34
129508-59920	14	35
129508-59930	14	36
129508-59940	14	37
129550-13110	6	1
	18	9
129550-59120	14	29
129553-39650	11	7
129556-42350	12	20
129601-34801	10	1
129612-01600	3	2
129648-33100	10	20
129648-35100	10	8
129648-35150	10	10
129648-44400	10	14
129648-49040	10	19
129655-44740	12	22
129688-01780	3	7 -1
129693-44310	6	6
129792-39410	11	1
129795-01780	3	17
129795-01800	2	5
129795-01900	17	31
129795-01950	2	15
129795-02411	1	13
129795-21661	9	9
129795-49551	12	27
	18	13
129900-07900	4	1
129900-32130	2	8
129900-77400	16	3
129900-77440	16	6
129900-77450	16	7
129900-77460	16	9
129900-77480	16	10
129900-77500	16	11
129900-77640	16	19
129907-11950	4	45
129950-59221	15	6
129950-59311	15	8
129961-59110	15	10
129980-59510	15	7
129981-59010	15	4
158552-51151	7	17

Parts No.	Fig. No.	Ref. No.
171008-77450	16	8
171008-77510	16	13
171008-77540	16	15
171008-77650	16	20
171008-77660	16	24
171008-77670	16	25
171008-77750	16	31
171031-11741	2	33
171051-01921	1	5
171056-49120	12	37
171353-26081	7	19
	18	37
171420-21580	9	12
22190-080002	11	10
		13
	14	44
	18	16
22190-100002	11	11
	18	24
22190-220002	3	10
	18	26
22217-140000	7	26
22252-000260	9	22
22351-030010	9	7
	11	26
22351-060012	4	60
22512-070140	7	7
22857-500100	4	54
23000-025000	10	21
	11	23
23000-048000	5	4
23000-060000	5	5
23061-070230	12	47
23414-080000	12	29
	18	25
23414-100000	11	27
	18	29
23857-030000	11	14
23876-010000	12	11
23876-020000	4	12
	12	12
23876-030000	2	3
23876-040000	2	4
24105-060064	7	25
24311-000120	4	57
		62
	18	17
24311-000160	15	17
24311-000320	2	22
		34

Parts No.	Fig. No.	Ref. No.
24311-000320	4	58
	18	18
24311-240100	10	17
	18	28
24314-000160	11	24
	18	27
24321-000600	10	22
	18	38
24321-000650	15	16
24321-000850	7	27
	18	36
24341-000240	2	28
	18	19
24341-000400	4	55
	18	32
25132-003600	12	21
26014-080452	17	33
26106-060122	12	38
26106-060162	2	29
	11	25
26106-060322	16	29
26106-060402	16	30
26106-080122	2	32
	11	15
	12	23
26106-080142	4	2
	7	16
26106-080162	2	23
		24
	3	11
	10	18
	12	18
26106-080202	5	6
	10	11
	13	2
26106-080222	12	28
26106-080252	3	12
	4	42
26106-080302	13	1
	15	3
26106-080352	3	19
	5	10
	10	5
26106-080402	7	13
26106-080452	3	13
		13 -1
	12	39
26106-080502	3	20
	4	43
26106-080552	2	25

Parts No. Index

Parts No.	Fig. No.	Ref. No.
26106-080602	12	19
26106-080802	5	7
26106-100452	7	29
26116-120252	16	32
26206-100252	3	4
26206-100302	3	5
26226-080352	4	41
26306-080002	2	26
	8	3
26306-100002	17	32
26366-060002	11	28
26450-080282	7	30
26776-140002	7	28
27241-120000	1	11
27241-300000	1	12
27241-400000	4	13
729402-23100	9	23
729508-01520	2	1
729508-01560	1	1
729508-92620	18	1
729648-51330	13	4
729648-53100	14	1
977770-01212	18	40
X2114255110	16	5
X2114555500	16	21
X2114955020	16	22
X2130350900	16	4
X2240410100	16	23
X9490561001	17	3

Parts No.	Fig. No.	Ref. No.

Parts No.	Fig. No.	Ref. No.

Parts No.	Fig. No.	Ref. No.