YANMAR

PARTS CATALOG

0CR10-M78900EN

Last update Jan., 2013

PREFACE

1. This Parts Catalog carries all parts incorporated in YANMAR Model 4TNV84T-ZKWLC engine manufactured since April, 2009.

2. Each illustration corresponds to the parts list on the following page.

3. When ordering parts, clearly write down the engine model and serial number, as well as the name and number of each part in your order sheet. This will help insure reliable delivery of the parts you have ordered.

Directions for the Parts Catalog.

1.This Parts Catalog shows both standard and optional parts.
2.Parts may change without prior notice.
3.The following is an example of the Parts Catalog format.

0CF10-G21601 29. FUEL INJECTION PUMP(W/BOOST)

(A)=4JH-DT
(B)=4JH-DTZ
(C)=4JH-DTZP
(D)=4JH-DTZA
(E)=4JH-DTZY
(F)=

① REF.	② LEV.	PARTS NO.	DESCRIPTION	Q'TY (A)	(B)	(C)	(D)	(E)	(F)	③ I	⑤ R
1	1	729595-51390	FUEL INJECTION PUMP	1	1	1	1	1			1
1-1	1	729595-51391	FUEL INJECTION PUMP	1	1	1	1	1		N	1
	(A=E00185)	(B=E00200)									
3	2	26022-060162	SCREW M 6X 16	9	9	9	9	9			
3-1 ④	2	26022-060162	SCREW M 6X 16	4	4	4	4	4		K	
	(A=E00156)	(B=E00156)	(C=E00156) (D=E00156)	(E=E00156)							
4	2	129470-51040	CAMSHAFT	1	1	1	1	1			
5	2	122710-51050	BEARING, ROLLER	2	2	2	2	2			
6	2	129470-51060	RETAINER	1	1	1	1	1			

Remarks
(1) BOOST COMPEMSATOR TYPE. OPTIONAL
PART, TO E00155,(4JH-DT, 4JH-DTZ

①Ref. No.

The Ref. No. listed may not be in accordance with the illustration Ref. No.

(Ex.) Illustration No. 1 — List Ref No. 1 (Before change) → 1- 1 (After change)

For interchangeable symbols N, R and K, illustrations for new parts may be abbreviated.

②Lev. (Level)

Level indication
The numbers below indicate the level of relativity towards the main part.
1 ----- Main parts (Assembly parts)
2 ----- Sub component included in " 1 ".
3 ----- Sub component included in " 2 ".
Note) Parts that are not for sale are partially illustrated but not listed.

③Interchangeability Symbol

When a part change takes place, one of the following interchangeability symbols is indicated beside the part.

Symbol	Interchangeability	Contents note
N	Old ← Yes / → No New	New Part is interchangeable for Old Part but Old Part is not interchangeable for New Part.
Q	Old ← No / → Yes New	New Part is not interchangeable for Old Part but Old Part is interchangeable for New Part.
R	Old ← Yes / → Yes New	New/ Old Parts are both interchangeable.
S	Old ← No / → No New	New/ Old Parts are both not interchangeable.
W		Part newly added.
Z		Part discontinued.
F		Not interchangeable by a single part but interchangeable together with related parts.
K		Changes only for used parts quantities.

④Effective Machine No.

When a part changes, the effective Machine No. will be indicated in the (A)-(F) column.

Product Symbol	Product No.	Product Symbol	Product No.
C	Clutch No. Compressor No.	F	Machine No. (Agricultural Equip.)
D	Drive No.	M	Machine No.
E	Engine No.		

Note 1) A date may follow the symbol. (Ex.) 1996.01
Note 2) " XXXXX " and " ZZZZZ " are for parts that could not be predicted or for engine models that could not be identified.
Note 3) (A=E00185) is the E (Engine Serial Number) for the column (A) model (in this case 4JH-DT) after the parts design change.

⑤Remarks

Figures or alphabets (symbols) are entered in the remarks column.
The comments (remarks) on parts that are indicated at the bottom of the illustration are the same symbols as those stated above.

Contents

0CR10-M78900

Fig. No.	Fig. Name
4TNV84T-ZKWLC	
1.	CYLINDER BLOCK
2.	GEAR HOUSING
3.	FLYWHEEL HOUSING & OIL SUMP
4.	CYLINDER HEAD & BONNET
5.	SUCTION MANIFOLD & AIR CLEANER
6.	EXHAUST MANIFOLD & SILENCER
7.	CAMSHAFT & DRIVING GEAR
8.	TURBINE
9.	CRANKSHAFT & PISTON
10.	LUB.OIL SYSTEM
11.	LUB.OIL LINE
12.	COOLING WATER SYSTEM
13.	FUEL INJECTION PUMP
14.	GOVERNOR
15.	FUEL INJECTION VALVE
16.	FUEL LINE
17.	STARTING MOTOR
18.	GENERATOR
19.	ELECTRONIC CONTROL UNIT (ECU)
20.	ELECTRIC PARTS
21.	GASKET SET

Fig. No.	Fig. Name

Fig.1. CYLINDER BLOCK

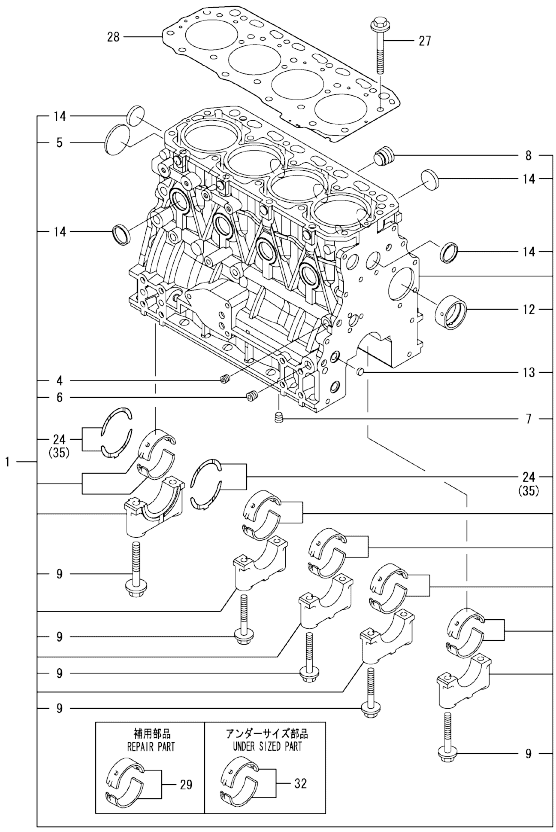

Remarks
(1) REPAIR PART.
(2) UNDER-SIZED(U.S=0.25)PART.
(3) OVER-SIZED(O.S=0.25)PART.

(A)=4TNV84T-ZKWLC (D)=
(B)= (E)=
(C)= (F)=

No.	Lev.	Parts No.	Description	Q'ty (A)	(B)	(C)	(D)	(E)	(F)	I	R
1	1	729509-01560	BLOCK ASSY, CYLINDER	1							
4	2	124060-01050	PLUG, PT1/8	1							
5	2	129001-01250	PLUG, 50	1							
6	2	124160-01910	PLUG, PT1/4	2							
7	2	124160-01910	PLUG, PT1/4	1							
8	2	171051-01921	PLUG, NPTF1	1							
9	2	129150-02020	BOLT, METAL CAP	10							
12	2	129795-02412	BUSH, CAMSHAFT	1							
13	2	27241-120000	PLUG, 12	2							
14	2	27241-300000	PLUG 30	8							
24	2	129150-02931	BEARING, THRUST	2							
27	1	129150-01200	BOLT, HEAD	18							
28	1	129508-01330	GASKET, HEAD	1							
29	1	129001-02931	BEARING, MAIN	5							1
32	1	129150-02871	BEARING, 0.25 US	5							2
35	1	129150-02941	BEARING, THRUST 0.25	1							3

N:Old ←Yes/No→ New. Q:Old ←No/Yes→ New. R:Old ←Yes/Yes→ New. S:Old ←No/No→ New. W:Add. Z:Discontinued. F:Interchangeable by set. K:Q'ty Change

Copyright (C) YANMAR GLOBAL CS CO., LTD. All RightsReserved.

Fig.2. GEAR HOUSING

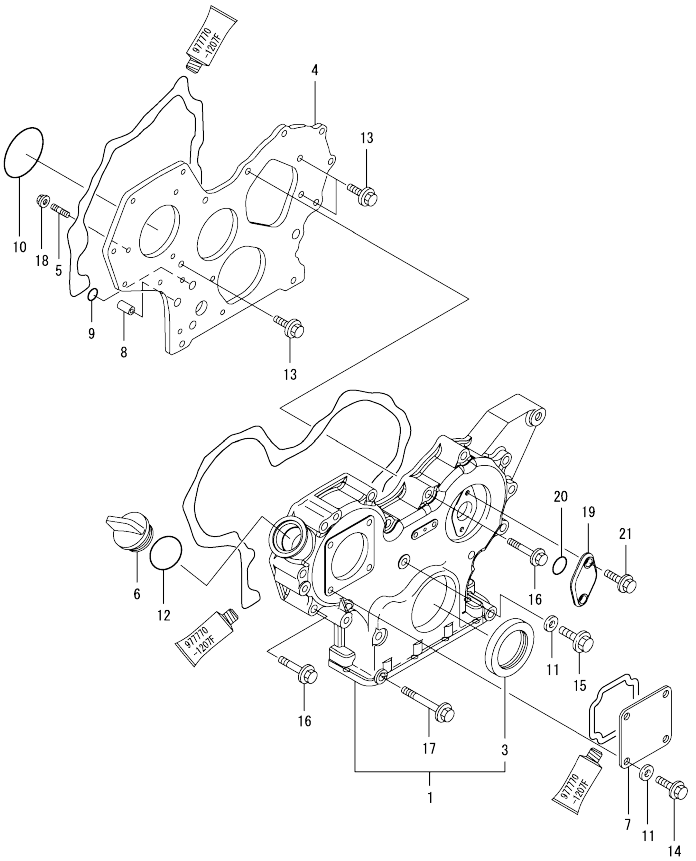

(A)=4TNV84T-ZKWLC
(B)=
(C)=
(D)=
(E)=
(F)=

No.	Lev.	Parts No.	Description	Q'ty (A)	(B)	(C)	(D)	(E)	(F)	I	R
1	1	719803-01500	CASE ASSY, GEAR	1							
3	2	119934-01800	SEAL, OIL	1							
4	1	119803-01520	FLANGE, GEAR CASE	1							
5	1	119802-01561	STUD, M8X25	3							
6	1	124160-01751	COVER, FILLER	1							
7	1	124240-01871	COVER	1							
8	1	129795-01950	PIPE, KNOCK L=18	2							
9	1	119609-32040	O-RING, P16	2							
10	1	121850-51960	O-RING	1							
11	1	22190-080002	WASHER, SEAL 6	5							
12	1	24311-000320	O-RING, 1AP32.0	1							
13	1	26106-080162	BOLT, M8X 16 PLATED	3							
14	1	26106-080162	BOLT, M8X 16 PLATED	4							
15	1	26106-080302	BOLT, M8X 30 PLATED	1							
16	1	26106-080552	BOLT, M8X 55 PLATED	12							
17	1	26106-080852	BOLT, M8X 85 PLATED	3							
18	1	26306-080002	NUT, M8	3							
19	1	121023-01551	COVER	1							
20	1	24341-000240	O-RING, 1AS24.0	1							
21	1	26106-060162	BOLT, M6X 16 PLATED	2							

N:Old ←Yes/No→ New. Q:Old ←No/Yes→ New. R:Old ←Yes/Yes→ New. S:Old ←No/No→ New. W:Add. Z:Discontinued. F:Interchangeable by set. K:Q'ty Change

Copyright (C) YANMAR GLOBAL CS CO., LTD. All RightsReserved.

Fig.3. FLYWHEEL HOUSING & OIL SUMP

(A)=4TNV84T-ZKWLC
(B)=
(C)=
(D)=
(E)=
(F)=

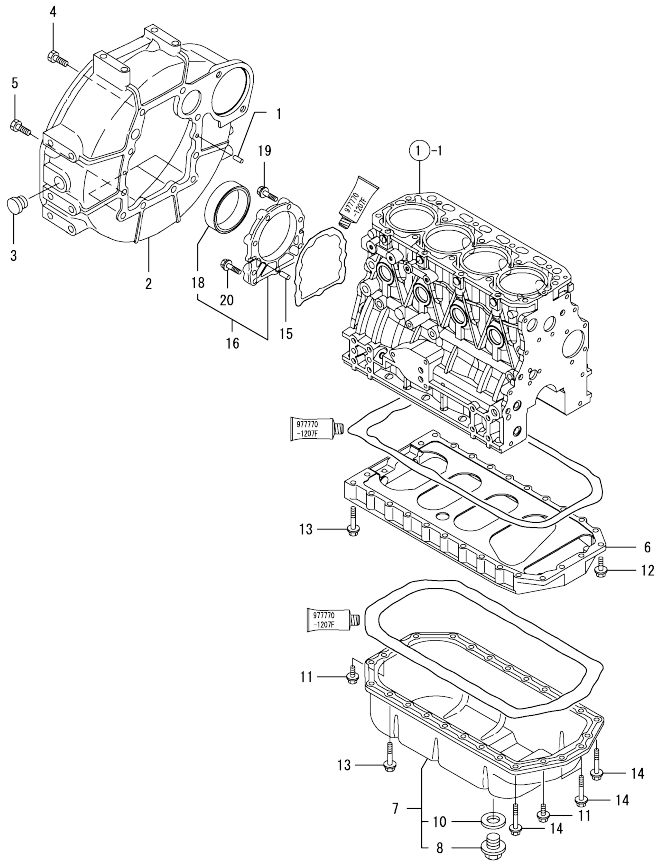

No.	Lev.	Parts No.	Description	Q'ty (A)	(B)	(C)	(D)	(E)	(F)	I	R
1	1	129100-01580	PIN, M8X16	2							
2	1	129612-01600	HOUSING, FLYWHEEL	1							
3	1	119620-01750	CAP	1							
4	1	26206-100252	BOLT, M10X 25 PLATED	6							
5	1	26206-100302	BOLT, M10X 30 PLATED	4							
6	1	129400-01730	SPACER, OIL SUMP	1							
7	1	129436-01780	SUMP ASSY, OIL	1							
8	2	119640-01640	PLUG, DRAIN M22	1							
10	2	22190-220002	WASHER, SEAL 22	1							
11	1	26106-080162	BOLT, M8X 16 PLATED	4							
12	1	26106-080252	BOLT, M8X 25 PLATED	2							
13	1	26106-080452	BOLT, M8X 45 PLATED	20							
14	1	26106-080502	BOLT, M8X 50 PLATED	4							
15	1	129100-01580	PIN, M8X16	2							
16	1	129648-01600	CASE ASSY, OIL SEAL	1							
18	2	129648-01780	SEAL, OIL	1							
19	1	129486-01670	BOLT, M8X30	6							
20	1	26106-080352	BOLT, M8X 35 PLATED	3							

N:Old ←Yes/No→ New. Q:Old ←No/Yes→ New. R:Old ←Yes/Yes→ New. S:Old ←No/No→ New. W:Add. Z:Discontinued. F:Interchangeable by set. K:Q'ty Change

Copyright (C) YANMAR GLOBAL CS CO., LTD. All RightsReserved.

Fig.4. CYLINDER HEAD & BONNET

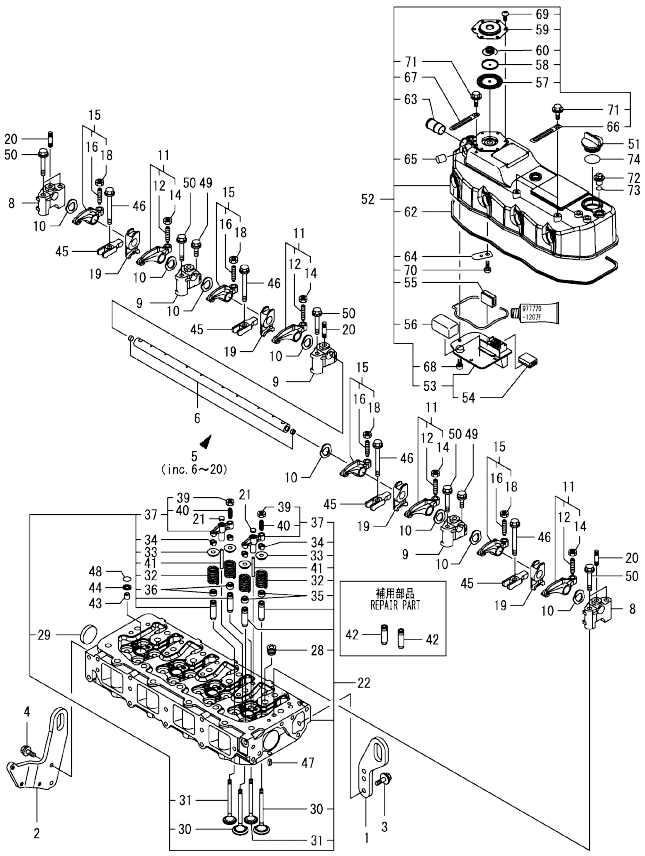

(A)=4TNV84T-ZKWLC (D)=
(B)= (E)=
(C)= (F)=

No.	Lev.	Parts No.	Description	Q'ty (A)	(B)	(C)	(D)	(E)	(F)	I	R
1	1	129486-07901	LIFTER	1							
2	1	129928-07900	LIFTER	1							
3	1	26106-080162	BOLT, M8X 16 PLATED	2							
4	1	26106-080202	BOLT, M8X 20 PLATED	2							
5	1	129508-11241	SHAFT ASSY, ROCKER	1							
6	2	129508-11250	SHAFT, ROCKER ARM	1							
8	2	129508-11260	SUPPORT, ROCKER ARM	2							
9	2	129508-11270	SUPPORT, ROCKER ARM	3							
10	2	129508-11280	WASHER	8							
11	2	129508-11650	ARM, ROCKER	4							
12	3	129150-11230	SCREW, VALVE ADJUST	4							
14	3	129150-11750	NUT, M8	4							
15	2	129508-11660	ARM, ROCKER	4							
16	3	129150-11230	SCREW, VALVE ADJUST	4							
18	3	129150-11750	NUT, M8	4							
19	2	129508-11920	RETAINER	4							
20	2	26226-080352	STUD, M8X 35	3							
21	1	123907-11550	SEAT, VALVE BRIDGE	8							
22	1	129509-11700	HEAD ASSY, CYLINDER	1							
28	2	23876-020000	PLUG, R02	4							
29	2	27241-400000	PLUG, 40	2							
30	2	129508-11100	VALVE, INTAKE	8							
31	2	129508-11110	VALVE, EXHAUST	8							
32	2	129508-11130	SPRING, VALVE	16							
33	2	129508-11180	RETAINER, SPRING	16							
34	2	119717-11190	COTTER	32							
35	2	119717-11340	SEAL, VALVE STEM	8							
36	2	119717-11350	SEAL, VALVE STEM	8							
37	2	129672-11510	BRIDGE ASSY, VALVE	8							
39	3	129150-11750	NUT, M8	8							
40	3	123907-11830	ADJUSTER	8							
41	2	129508-11820	GUIDE	8							
42	1	119717-11800	GUIDE, VALVE	16							1
43	1	119802-11870	PROTECTOR, NOZZLE	4							
44	1	119625-11880	SEAT, NOZZLE	4							
45	1	129508-11900	RETAINER, NOZZLE	4							
46	1	129907-11950	BOLT, M8X75	4							
47	1	22351-060012	PIN, SPRING 6.0X12	2							
48	1	24311-000120	O-RING, 1AP12.0	4							
49	1	26106-080252	BOLT, M8X 25 PLATED	3							
50	1	26106-080502	BOLT, M8X 50 PLATED	7							
51	1	124160-01751	COVER, FILLER	1							
52	1	129509-11350	BONNET ASSY, HEAD	1							
53	2	129508-03010	PLATE	1							
54	3	119802-03070	BAFFLE, BREATHER	1							
55	2	129150-03070	BAFFLE, BREATHER	1							
56	2	129907-03070	BAFFLE, BREATHER	1							
57	2	123907-03100	DIAPHRAGM	1							
58	2	123907-03110	PLATE	1							
59	2	123907-03120	PLATE, BREATHER	1							
60	2	123907-03140	SPRING, DIAPHRAGM	1							

Remarks
(1) REPAIR PART.

N:Old ←Yes/No→ New. Q:Old ←No/Yes→ New. R:Old ←Yes/Yes→ New. S:Old ←No/No→ New. W:Add. Z:Discontinued. F:Interchangeable by set. K:Q'ty Change

++ CONTINUE ++

Copyright (C) YANMAR GLOBAL CS CO., LTD. All RightsReserved.

Fig.4. CYLINDER HEAD & BONNET

(A)=4TNV84T-ZKWLC (D)=
(B)= (E)=
(C)= (F)=

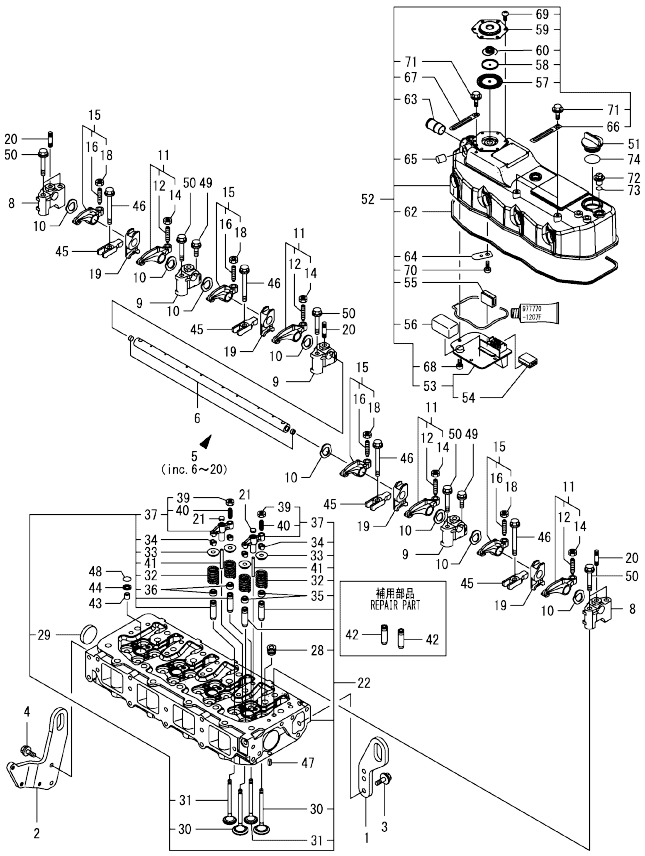

No.	Lev.	Parts No.	Description	Q'ty (A)	(B)	(C)	(D)	(E)	(F)	I	R
62	2	129508-11310	GASKET, BONNET	1							
63	2	129001-11340	PIPE , BREATHER	1							
64	2	129009-11340	SPRING	1							
65	2	119640-61400	PLUG	1							
66	2	129509-79700	CLIP	2							
67	2	175339-79700	CLIP	1							
68	2	22857-500100	SCREW, 5X10	4							
69	2	22857-500100	SCREW, 5X10	6							
70	2	22857-500100	SCREW, 5X10	1							
71	2	26106-060122	BOLT, M6X 12 PLATED	3							
72	1	124160-11360	KNOB	3							
73	1	24311-000120	O-RING, 1AP12.0	3							
74	1	24311-000320	O-RING, 1AP32.0	1							

Remarks
(1) REPAIR PART.

N:Old ←Yes/No→ New. Q:Old ←No/Yes→ New. R:Old ←Yes/Yes→ New. S:Old ←No/No→ New. W:Add. Z:Discontinued. F:Interchangeable by set. K:Q'ty Change

Copyright (C) YANMAR GLOBAL CS CO., LTD. All RightsReserved.

Fig.5. SUCTION MANIFOLD & AIR CLEANER

(A)=4TNV84T-ZKWLC
(B)=
(C)=
(D)=
(E)=
(F)=

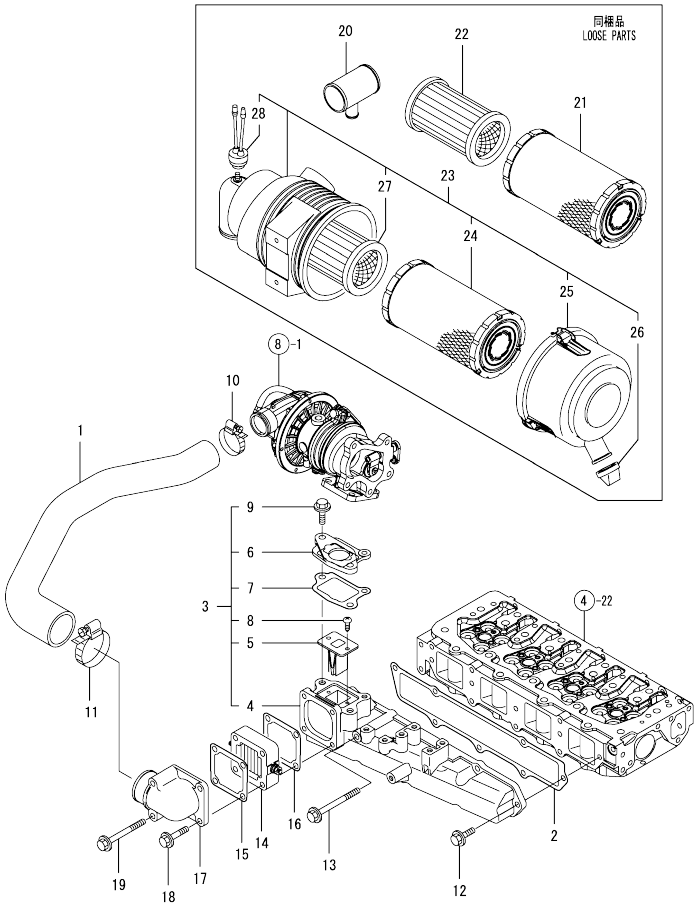

No.	Lev.	Parts No.	Description	Q'ty (A)	(B)	(C)	(D)	(E)	(F)	I	R
1	1	129509-12060	PIPE, AIR INTAKE	1							
2	1	129508-12110	GASKET, MANIFOLD	1							
3	1	129509-12150	MANIFOLD ASSY,INTAKE	1							
4	2	129509-12100	MANIFOLD, AIR INTAKE	1							
5	2	129509-13700	VALVE	1							
6	2	129509-13710	SPACER	1							
7	2	129509-13720	GASKET	1							
8	2	22857-500160	SCREW, 5X16	2							
9	2	26106-080202	BOLT, M8X 20 PLATED	1							
10	1	23000-048000	CLAMP, 48	1							
11	1	23000-060000	CLAMP, 60	1							
12	1	26106-080202	BOLT, M8X 20 PLATED	5							
13	1	26106-080902	BOLT, M8X 90 PLATED	2							
14	1	129100-77501	HEATER	1							
15	1	129100-77510	GASKET, AIR HEATER	1							
16	1	129150-77511	GASKET	1							
17	1	171340-77520	BEND	1							
18	1	26106-080402	BOLT, M8X 40 PLATED	2							
19	1	26106-080802	BOLT, M8X 80 PLATED	2							
20	1	129509-03050	JOINT, BREATHER	1							
21	1	129906-12520	ELEMENT	1							
22	1	119005-12571	ELEMENT	1							
23	1	129601-12610	CLEANER ASSY, AIR	1							
24	2	129906-12520	ELEMENT	1							
25	2	129457-12530	COVER	1							
26	2	119808-12540	VALVE, UNLOADER	1							
27	2	119005-12571	ELEMENT	1							
28	2	119140-12680	INDICATOR	1							

N:Old ←Yes/No→ New. Q:Old ←No/Yes→ New. R:Old ←Yes/Yes→ New. S:Old ←No/No→ New. W:Add. Z:Discontinued. F:Interchangeable by set. K:Q'ty Change

Copyright (C) YANMAR GLOBAL CS CO., LTD. All RightsReserved.

Fig.6. EXHAUST MANIFOLD & SILENCER

(A)=4TNV84T-ZKWLC (D)=
(B)= (E)=
(C)= (F)=

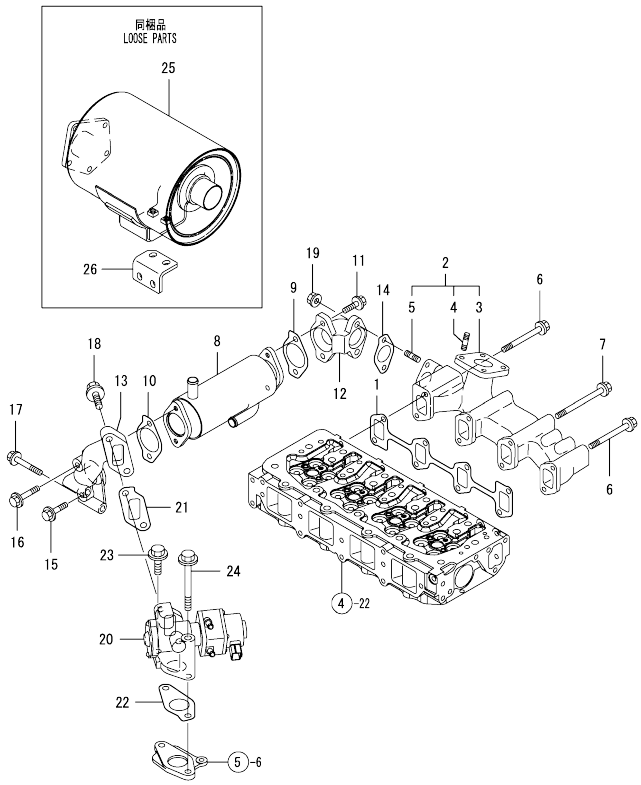

No.	Lev.	Parts No.	Description	Q'ty (A)	(B)	(C)	(D)	(E)	(F)	I	R
1	1	129550-13110	GASKET	1							
2	1	129509-13150	MANIFOLD ASSY	1							
3	2	129509-13100	MANIFOLD, EXHAUST	1							
4	2	129418-18320	STUD, M8X20	4							
5	2	129418-18320	STUD, M8X20	2							
6	1	123900-13630	BOLT, M8X80	4							
7	1	129693-44310	BOLT	4							
7-1	1 (A=*2009.12)	119802-13820	BOLT, M8X100 9.8T	4						N	
8	1	129509-13400	COOLER, EGR	1							
9	1	129928-13410	GASKET	1							
10	1	129928-13410	GASKET	1							
11	1	119802-13790	BOLT, M8X25 10.9T	2							
12	1	129928-13800	PIPE	1							
13	1	129509-13810	PIPE	1							
14	1	129927-13810	GASKET	1							
15	1	26106-080352	BOLT, M8X 35 PLATED	1							
16	1	26106-080452	BOLT, M8X 45 PLATED	1							
17	1	26106-080552	BOLT, M8X 55 PLATED	2							
18	1	26106-100252	BOLT, M10X 25 PLATED	2							
19	1	26306-080002	NUT, M8	2							
20	1	129928-13900	VALVE	1							
21	1	129927-13910	GASKET	1							
22	1	129927-13920	GASKET	1							
23	1	26106-100402	BOLT, M10X 40 PLATED	1							
24	1	26106-101052	BOLT, M10X105 PLATED	1							
25	1	129648-13520	SILENCER	1							
26	1	129648-13570	SUPPORT, SILENCER	1							

N:Old ◄Yes/No► New. Q:Old ◄No/Yes► New. R:Old ◄Yes/Yes► New. S:Old ◄No/No► New. W:Add. Z:Discontinued. F:Interchangeable by set. K:Q'ty Change

Copyright (C) YANMAR GLOBAL CS CO., LTD. All RightsReserved.

Fig.7. CAMSHAFT & DRIVING GEAR

(A)=4TNV84T-ZKWLC
(B)=
(C)=
(D)=
(E)=
(F)=

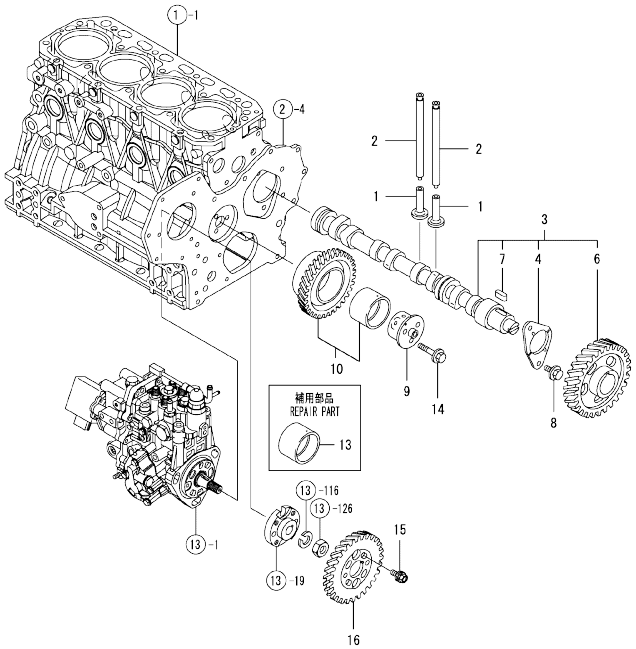

No.	Lev.	Parts No.	Description	Q'ty (A)	(B)	(C)	(D)	(E)	(F)	I	R
1	1	129150-14200	TAPPET	8							
2	1	129150-14400	ROD, PUSH L=178	8							
3	1	129508-14580	CAMSHAFT ASSY	1							
4	2	129150-02450	BEARING, THRUST	1							
6	2	129150-14101	GEAR, CAMSHAFT	1							
7	2	22512-070140	KEY, 7X 14	1							
8	1	26106-080142	BOLT, M8X 14 PLATED	2							
9	1	119803-25050	SHAFT, IDLE	1							
10	1	119802-25101	GEAR ASSY, IDLE	1							
13	1	119802-25071	BUSH, IDLE GEAR	1							1
14	1	26106-080402	BOLT, M8X 40 PLATED	3							
15	1	129150-25301	BOLT	4							
16	1	119802-25901	GEAR, PUMP	1							

Remarks
(1) REPAIR PART.

N:Old ←Yes/No→ New. Q:Old ←No/Yes→ New. R:Old ←Yes/Yes→ New. S:Old ←No/No→ New. W:Add. Z:Discontinued. F:Interchangeable by set. K:Q'ty Change

Copyright (C) YANMAR GLOBAL CS CO., LTD. All RightsReserved.

Fig.8. TURBINE

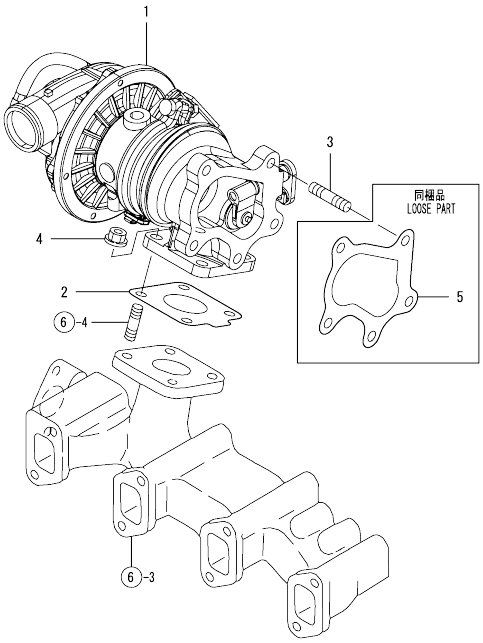

(A)=4TNV84T-ZKWLC
(B)=
(C)=
(D)=
(E)=
(F)=

No.	Lev.	Parts No.	Description	Q'ty (A)	(B)	(C)	(D)	(E)	(F)	I	R
1	1	129508-18010	TURBINE, RHF4	1							
2	1	129508-18080	GASKET	1							
3	1	129418-18320	STUD, M8X20	5							
4	1	26306-080002	NUT, M8	4							
5	1	129508-18090	GASKET	1							

N:Old ◄Yes/No► New. Q:Old ◄No/Yes► New. R:Old ◄Yes/Yes► New. S:Old ◄No/No► New. W:Add. Z:Discontinued. F:Interchangeable by set. K:Q'ty Change

Copyright (C) YANMAR GLOBAL CS CO., LTD. All RightsReserved.

Fig.9. CRANKSHAFT & PISTON

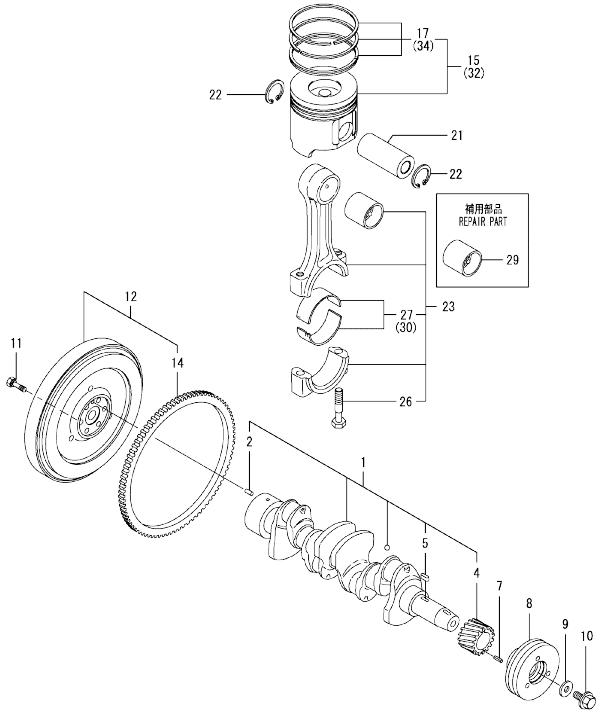

Remarks
(1) REPAIR PART.
(2) UNDER-SIZED(U.S=0.25)PART.
(3) OVER-SIZED(O.S=0.25)PART.

(A)=4TNV84T-ZKWLC (D)=
(B)= (E)=
(C)= (F)=

No.	Lev.	Parts No.	Description	Q'ty (A)	(B)	(C)	(D)	(E)	(F)	I	R
1	1	129509-21000	CRANKSHAFT ASSY	1							
2	2	129100-01580	PIN, M8X16	1							
4	2	119803-21200	GEAR, CRANKSHAFT	1							
5	2	22512-070140	KEY, 7X 14	1							
7	1	22351-030010	PIN, SPRING 3.0X10	1							
8	1	119802-21660	V-PULLEY, 120	1							
9	1	129795-21661	WASHER	1							
10	1	121850-21680	BOLT	1							
11	1	121111-21501	BOLT, FLYWHEEL	6							
12	1	129489-21590	FLYWHEEL ASSY	1							
14	2	119865-21600	GEAR, RING	1							
15	1	129509-22080	PISTON ASSY	4							
17	2	129509-22500	RING SET, PISTON	4							
21	1	129202-22300	PIN, PISTON D26 L70	4							
22	1	22252-000260	RING, 26	8							
23	1	729402-23100	ROD ASSY, CONNECTING	4							
26	2	121550-23200	BOLT, CONNECTING ROD	8							
27	2	129150-23601	BEARING, CRANK PIN	4							
29	1	129100-23910	BEARING, PISTON PIN	4							1
30	1	129150-23611	BEARING, 0.25 US	4							2
32	1	729509-22900	PISTON ASSY, 0.25 OS	4							3
34	2	729509-22950	RING SET, 0.25 OS	4							3

N:Old ←Yes/No→ New. Q:Old ←No/Yes→ New. R:Old ←Yes/Yes→ New. S:Old ←No/No→ New. W:Add. Z:Discontinued. F:Interchangeable by set. K:Q'ty Change

Copyright (C) YANMAR GLOBAL CS CO., LTD. All RightsReserved.

Fig.10. LUB.OIL SYSTEM

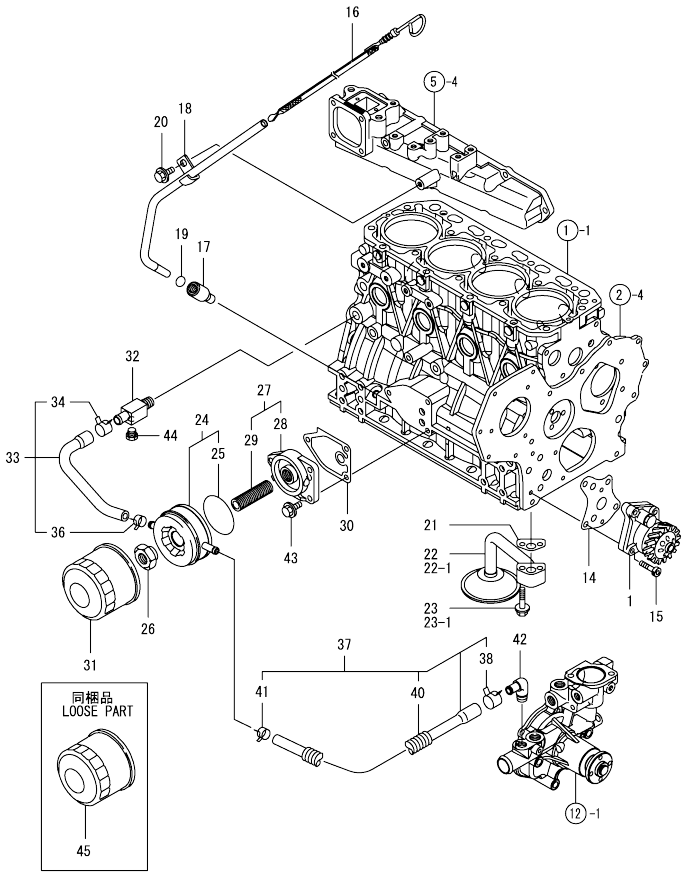

(A)=4TNV84T-ZKWLC (D)=
(B)= (E)=
(C)= (F)=

No.	Lev.	Parts No.	Description	Q'ty (A)	(B)	(C)	(D)	(E)	(F)	I	R
1	1	129418-32000	PUMP ASSY, OIL	1							
14	1	129150-32020	GASKET, PUMP	1							
15	1	26450-060252	BOLT, M6X 25	4							
16	1	129244-34802	DIPSTICK, OIL	1							
17	1	119260-34810	GUIDE, DIPSTICK	1							
18	1	129536-34860	GUIDE, DIPSTICK	1							
19	1	24316-240100	O-RING, 4DP10A	1							
20	1	26106-080162	BOLT, M8X 16 PLATED	1							
21	1	129150-35042	GASKET	1							
22	1	129436-35091	PIPE ASSY, OIL INLET	1							
22-1	1	129436-35070	PIPE ASSY, LUB. OIL	1							S
	(A=EZZZZZ)										
23	1	26106-080352	BOLT, M8X 35 PLATED	2							
23-1	1	26106-080552	BOLT, M8X 55 PLATED	2							S
	(A=EZZZZZ)										
24	1	129508-33010	COOLER ASSY, OIL	1							
25	2	129508-33050	O-RING	1							
26	1	129417-33110	NUT	1							
27	1	129006-35100	BRACKET ASSY, FILTER	1							
28	2	119802-35110	BRACKET, FILTER	1							
29	2	129417-35150	STUD, L=67	1							
30	1	129150-35111	GASKET	1							
31	1	129150-35160	FILTER, D80XL80	1							
32	1	129006-44480	JOINT	1							
33	1	129508-49030	PIPE ASSY, WATER	1							
34	2	171008-03990	CLIP, HOSE 18.5	1							
36	2	23080-015000	CLAMP, 15	1							
37	1	129508-49040	PIPE ASSY, WATER	1							
38	2	171008-03990	CLIP, HOSE 18.5	1							
40	2	119940-59130	TUBE, CORRUGATED	1							
41	2	23080-015000	CLAMP, 15	1							
42	1	129103-49301	ELBOW, PT1/4	1							
43	1	26106-080202	BOLT, M8X 20 PLATED	3							
44	1	171056-49120	PLUG, DRAIN	1							
45	1	129150-35170	FILTER,LO	1							

N:Old ←Yes/No→ New. Q:Old ←No/Yes→ New. R:Old ←Yes/Yes→ New. S:Old ←No/No→ New. W:Add. Z:Discontinued. F:Interchangeable by set. K:Q'ty Change

Copyright (C) YANMAR GLOBAL CS CO., LTD. All RightsReserved.

Fig.11. LUB.OIL LINE

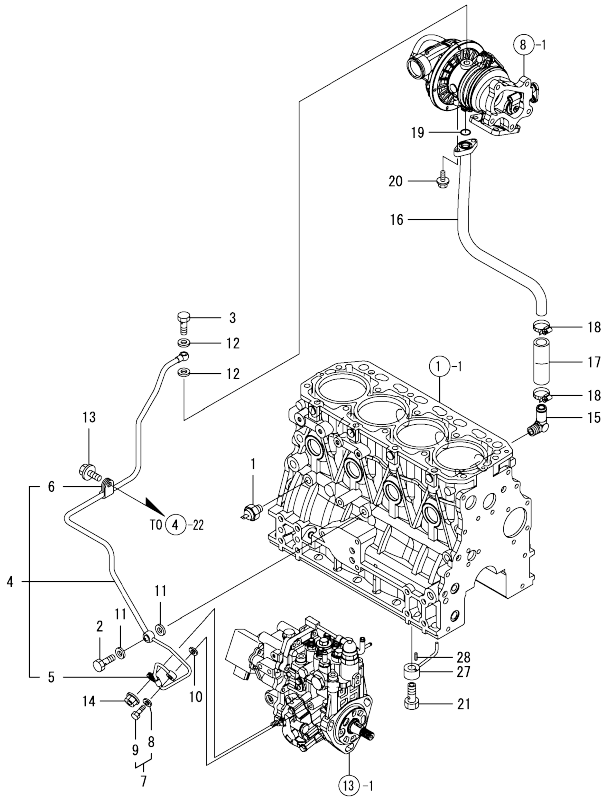

(A)=4TNV84T-ZKWLC (D)=
(B)= (E)=
(C)= (F)=

No.	Lev.	Parts No.	Description	Q'ty (A)	(B)	(C)	(D)	(E)	(F)	I	R
1	1	119761-39450	SWITCH, 0.5KG	1							
2	1	124160-39140	BOLT, PIPE JOINT M10	1							
3	1	121252-39150	BOLT, JOINT M10X1.5	1							
4	1	129508-39450	PIPE ASSY, OIL	1							
5	2	119802-39500	RETAINER, PIPE	1							
6	2	124223-39900	RETAINER	1							
7	1	129005-59830	BOLT ASSY, JOINT M8	1							
8	2	22190-080002	WASHER, SEAL 6	1							
9	2	23857-030000	BOLT, JOINT 3	1							
10	1	22190-080002	WASHER, SEAL 6	1							
11	1	22190-100002	WASHER, SEAL 10	2							
12	1	23414-100000	GASKET, 10X1.0	2							
13	1	26106-080122	BOLT, M8X 12 PLATED	1							
14	1	26366-060002	NUT, M6	1							
15	1	124070-13300	ELBOW, PT3/8	1							
16	1	129508-39600	PIPE, OIL	1							
17	1	123901-39820	HOSE	1							
18	1	23000-025000	CLAMP, 25	2							
19	1	24316-000160	O-RING, 4DP16.0	1							
20	1	26106-060162	BOLT, M6X 16 PLATED	2							
21	1	129792-39410	VALVE ASSY, CHECK	4							
27	1	129553-39650	NOZZLE	4							
28	1	22351-030010	PIN, SPRING 3.0X10	4							

N:Old ←Yes/No→ New. Q:Old ←No/Yes→ New. R:Old ←Yes/Yes→ New. S:Old ←No/No→ New. W:Add. Z:Discontinued. F:Interchangeable by set. K:Q'ty Change

Copyright (C) YANMAR GLOBAL CS CO., LTD. All RightsReserved.

Fig.12. COOLING WATER SYSTEM

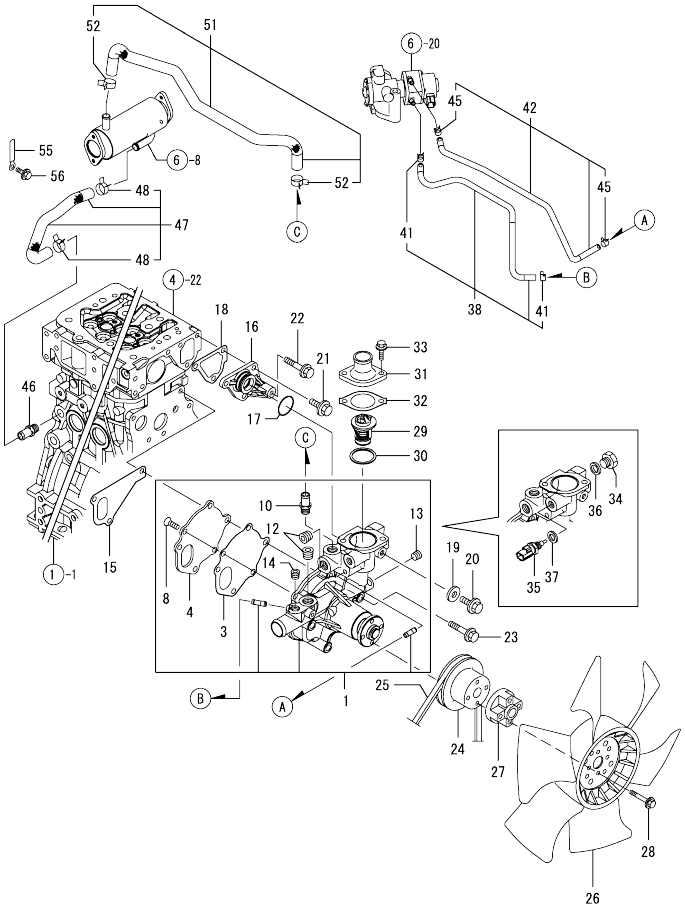

(A)=4TNV84T-ZKWLC (D)=
(B)= (E)=
(C)= (F)=

No.	Lev.	Parts No.	Description	Q'ty (A)	(B)	(C)	(D)	(E)	(F)	I	R
1	1	129509-42010	PUMP ASSY, WATER	1							
3	2	129100-42051	GASKET, WATER PUMP	1							
4	2	129100-42121	PLATE	1							
8	2	121850-42410	SCREW	3							
10	2	129928-49420	JOINT	1							
12	2	129916-49740	PLUG, R03	2							
13	2	23876-010000	PLUG, R01	1							
14	2	23876-020000	PLUG, R02	1							
15	1	129486-42021	GASKET, WATER PUMP	1							
16	1	129004-42040	JOINT	1							
17	1	129486-42140	O-RING, G30	1							
18	1	124395-49840	GASKET	1							
19	1	23414-080000	GASKET, 8X1.0	1							
20	1	26106-080122	BOLT, M8X 12 PLATED	1							
21	1	26106-080162	BOLT, M8X 16 PLATED	3							
22	1	26106-080452	BOLT, M8X 45 PLATED	1							
23	1	26106-080602	BOLT, M8X 60 PLATED	3							
24	1	129155-42350	V-PULLEY	1							
25	1	25132-003800	V-BELT, A38	1							
26	1	129648-44700	FAN, COOLING	1							
27	1	171353-44760	SPACER, FAN	1							
28	1	26106-060402	BOLT, M6X 40 PLATED	4							
29	1	129155-49801	THERMOSTAT, 71	1							
30	1	129150-49811	GASKET, THERMOSTAT	1							
31	1	129350-49530	COVER, THERMOSTAT	1							
32	1	129795-49551	GASKET	1							
33	1	26106-080222	BOLT, M8X 22 PLATED	2							
34	1	121450-42450	PLUG, M16	1							
35	1	129927-44900	SENSOR	1							
36	1	124465-44950	GASKET, 16	1							
37	1	22190-120002	WASHER, SEAL 12	1							
38	1	129509-49630	PIPE, WATER	1							
41	2	23080-012000	CLAMP, 12	2							
42	1	129509-49640	PIPE, WATER	1							
45	2	23080-012000	CLAMP, 12	2							
46	1	129928-49420	JOINT	1							
47	1	129509-49610	PIPE, WATER	1							
48	2	129960-03990	CLIP, HOSE 22	2							
51	1	129509-49620	PIPE, WATER	1							
52	2	129960-03990	CLIP, HOSE 22	2							
55	1	105430-67110	CLAMP, CORD	1							
56	1	26106-080122	BOLT, M8X 12 PLATED	1							

N:Old ←Yes/No→ New. Q:Old ←No/Yes→ New. R:Old ←Yes/Yes→ New. S:Old ←No/No→ New. W:Add. Z:Discontinued. F:Interchangeable by set. K:Q'ty Change

Copyright (C) YANMAR GLOBAL CS CO., LTD. All RightsReserved.

Fig.13. FUEL INJECTION PUMP

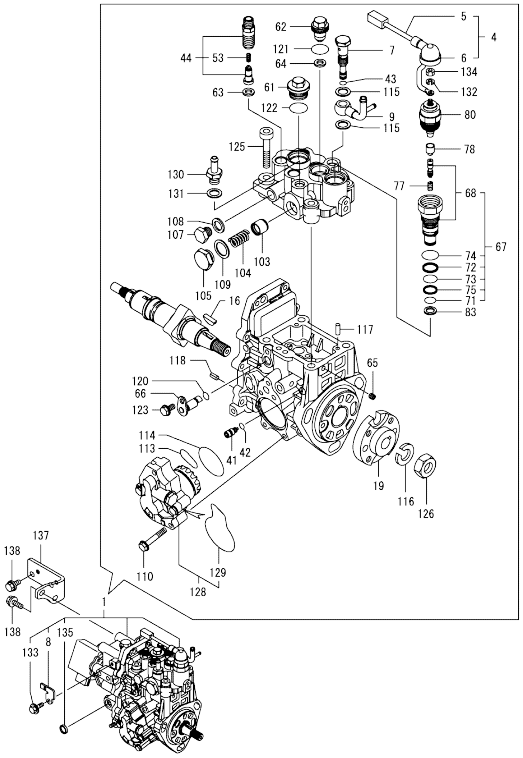

Remarks
(1) GOVERNOR ASSY(FIG.14) IS INCORPORATED IN THIS FUEL INJECTION PUMP.(REF.NO.1).
(1) ECO PUMP
MAKE SURE TO UPDATE THE ENGINES ECU INFORMATION WHEN REPLACING THE ECO PUMP.
FAILING TO DO SO WILL RESULT IN ENGINE MALFUNCTION.

(A)=4TNV84T-ZKWLC (D)=
(B)= (E)=
(C)= (F)=

No.	Lev.	Parts No.	Description	Q'ty (A)	(B)	(C)	(D)	(E)	(F)	I	R
1	1	729536-51340	FIE ASSY	1							1
4	2	129927-51650	HARNESS ASSY, WIRE	1							
5	3	129927-51660	HARNESS	1							
6	3	129263-77941	CAP, RUBBER	1							
7	2	158601-51650	JOINT, OVER FLOW	1							
8	2	129927-51670	BRACKET	1							
9	2	158552-51670	JOINT, OVER FLOW	1							
16	2	119802-51090	FEATHER KEY, 4X16	1							
19	2	158552-51151	FLANGE	1							
41	2	158600-51270	STOPPER, TAPPET	1							
42	2	158563-51281	O-RING, 4D S6	1							
43	2	158563-51281	O-RING, 4D S6	1							
44	2	129008-51390	VALVE ASSY, DELIVERY	4							
53	3	158563-51330	SPRING, DELIVERY	4							
61	2	158601-51550	PLUG, M22	1							
62	2	119802-51560	PLUG, M14	1							
63	2	158552-51571	GASKET, PLUG	4							
64	2	158552-51571	GASKET, PLUG	1							
65	2	158557-51570	PLUG, RACK	1							
66	2	158552-51580	LIFTER, LINK	1							
67	2	129657-51590	TIMER ASSY	1							
68	3	129657-51600	TIMER ASSY	1							
71	3	158553-51670	O-RING	1							
72	3	119802-51680	RING, BACKUP	1							
73	3	119802-51690	O-RING	1							
74	3	24356-010200	O-RING, 4D1020	1							
75	3	24372-000150	RING, BACK UP T2P15	1							
77	2	119852-51630	SPRING, TIMER	1							
78	2	119852-51640	CAP, TIMER	1							
80	2	119852-51650	VALVE ASSY, SOLENOID	1							
83	2	158553-51680	GASKET, TIMER	1							
103	2	158601-51770	PISTON, ACCUMLATOR	1							
104	2	158552-51781	SPRING, ACCUMULATOR	1							
105	2	158601-51790	PLUG	1							
107	2	158553-51930	PLUG, M12	1							
108	2	22190-120002	WASHER, SEAL 12	1							
109	2	22190-180002	WASHER, SEAL 18	1							
110	2	158553-51770	BOLT	4							
113	2	158552-52310	O-RING	1							
114	2	158552-52400	O-RING, 4E S42	1							
115	2	22190-120002	WASHER, SEAL 12	2							
116	2	22217-140000	WASHER, SPRING 14	1							
117	2	22312-050140	PIN, PARALLEL M5X14	2							
118	2	22351-050010	PIN, SPRING 5.0X10	2							
120	2	24311-000070	O-RING, 1AP7.0	1							
121	2	24356-010180	O-RING, 4D1018	1							
122	2	24356-010200	O-RING, 4D1020	1							
123	2	26106-060102	BOLT, M6X 10 PLATED	1							
125	2	26450-080452	BOLT, M8X 45	4							
126	2	26776-140002	NUT, LOCK M14	1							
128	2	158552-52100	PUMP ASSY, FUEL FEED	1							

N:Old ←Yes/No→ New. Q:Old ←No/Yes→ New. R:Old ←Yes/Yes→ New. S:Old ←No/No→ New. W:Add. Z:Discontinued. F:Interchangeable by set. K:Q'ty Change

++ CONTINUE ++

Copyright (C) YANMAR GLOBAL CS CO., LTD. All RightsReserved.

Fig.13. FUEL INJECTION PUMP

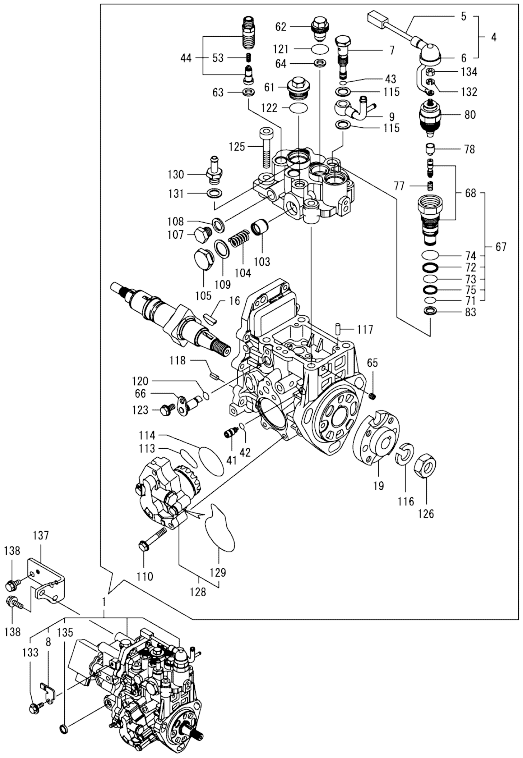

Remarks
(1) GOVERNOR ASSY(FIG.14) IS INCORPORATED IN THIS FUEL INJECTION PUMP.(REF.NO.1).
(1) ECO PUMP
MAKE SURE TO UPDATE THE ENGINES ECU INFORMATION WHEN REPLACING THE ECO PUMP.
FAILING TO DO SO WILL RESULT IN ENGINE MALFUNCTION.

(A)=4TNV84T-ZKWLC (D)=
(B)= (E)=
(C)= (F)=

No.	Lev.	Parts No.	Description	Q'ty (A)	(B)	(C)	(D)	(E)	(F)	I	R
129	3	158552-52500	O-RING	1							
130	2	119934-59910	JOINT, PIPE	1							
131	2	22190-120002	WASHER, SEAL 12	1							
132	2	22217-050000	WASHER, SPRING 5	1							
133	2	26106-060142	BOLT, M6X 14 PLATED	1							
134	2	26716-050002	NUT, M5	1							
135	2	27241-160000	PLUG, 16	1							
137	1	129263-51251	RETAINER, PUMP	1							
138	1	26106-080162	BOLT, M8X 16 PLATED	4							

N:Old ←Yes/No→ New. Q:Old ←No/Yes→ New. R:Old ←Yes/Yes→ New. S:Old ←No/No→ New. W:Add. Z:Discontinued. F:Interchangeable by set. K:Q'ty Change

Copyright (C) YANMAR GLOBAL CS CO., LTD. All RightsReserved.

Fig.14. GOVERNOR

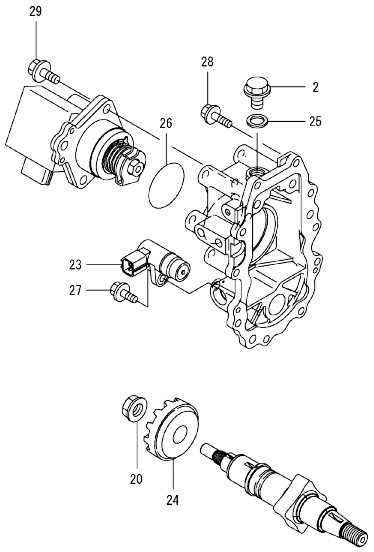

Remarks
* THIS FIGURE(GOVERNOR ASSY)IS INCORPORATED IN THE FUEL INJECTION PUMP ASSY(FIG.13).

(A)=4TNV84T-ZKWLC (D)=
(B)= (E)=
(C)= (F)=

No.	Lev.	Parts No.	Description	Q'ty (A)	(B)	(C)	(D)	(E)	(F)	I	R
2	2	158553-51930	PLUG, M12	1							
20	2	129008-61301	NUT	1							
23	2	158557-61720	SENSOR	1							
24	2	158553-61780	GEAR, SENSOR	1							
25	2	22190-120002	WASHER, SEAL 12	1							
26	2	24341-000480	O-RING, 1AS48.0	1							
27	2	26106-060162	BOLT, M6X 16 PLATED	1							
28	2	26106-060202	BOLT, M6X 20 PLATED	10							
29	2	26106-080252	BOLT, M8X 25 PLATED	3							

N:Old ←Yes/No→ New. Q:Old ←No/Yes→ New. R:Old ←Yes/Yes→ New. S:Old ←No/No→ New. W:Add. Z:Discontinued. F:Interchangeable by set. K:Q'ty Change

Copyright (C) YANMAR GLOBAL CS CO., LTD. All RightsReserved.

Fig.15. FUEL INJECTION VALVE

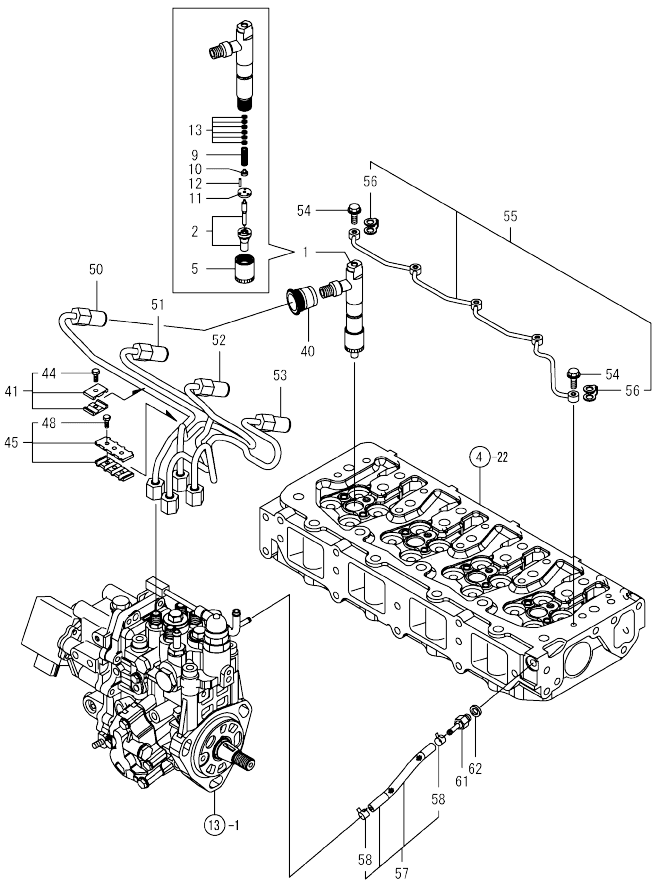

(A)=4TNV84T-ZKWLC (D)=
(B)= (E)=
(C)= (F)=

No.	Lev.	Parts No.	Description	Q'ty (A)	(B)	(C)	(D)	(E)	(F)	I	R
1	1	729530-53200	VALVE ASSY,INJECTION	4							
2	2	129530-53000	VALVE ASSY,INJECTION	4							
5	2	114250-53080	NUT, NOZZLE D16.95	4							
9	2	114250-53120	SPRING, NOZZLE	4							
10	2	114250-53130	SEAT, SPRING	4							
11	2	114250-53140	PLATE	4							
12	2	114250-53210	PIN	8							
13	2	119803-53400	SHIM SET	4							
40	1	123907-11601	SEAL	4							
41	1	119305-59120	RETAINER, PIPE	2							
44	2	129150-59131	BOLT, M4X14	2							
45	1	129550-59120	RETAINER, PIPE	1							
48	2	129150-59131	BOLT, M4X14	2							
50	1	129508-59910	PIPE ASSY, INJECTION	1							
51	1	129508-59920	PIPE ASSY, INJECTION	1							
52	1	129508-59930	PIPE ASSY, INJECTION	1							
53	1	129508-59940	PIPE ASSY, INJECTION	1							
54	1	123907-59540	BOLT, PIPE JOINT M6	5							
55	1	129508-59550	PIPE ASSY, RETURN	1							
56	2	123907-59550	GASKET	5							
57	1	129509-59550	PIPE ASSY, FUEL	1							
58	2	124722-59050	CLIP, HOSE 9	2							
61	1	123907-59560	JOINT	1							
62	1	22190-080002	WASHER, SEAL 6	1							

N:Old ◄Yes/No► New. Q:Old ◄No/Yes► New, R:Old ◄Yes/Yes► New, S:Old ◄No/No► New, W:Add, Z:Discontinued. F:Interchangeable by set. K:Q'ty Change

Copyright (C) YANMAR GLOBAL CS CO., LTD. All RightsReserved.

Fig.16. FUEL LINE

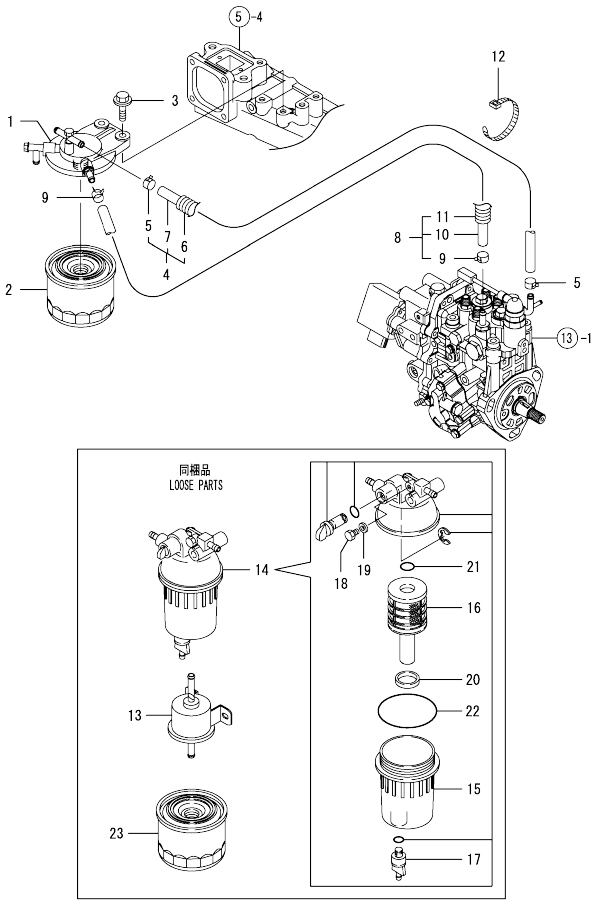

(A)=4TNV84T-ZKWLC (D)=
(B)= (E)=
(C)= (F)=

No.	Lev.	Parts No.	Description	Q'ty (A)	(B)	(C)	(D)	(E)	(F)	I	R
1	1	129004-55612	BRACKET, FILTER	1							
2	1	119802-55810	FILTER,FO	1							
3	1	26106-080302	BOLT, M8X 30 PLATED	2							
4	1	129457-59010	PIPE ASSY, FUEL	1							
5	2	124766-59050	CLIP, HOSE 12	2							
6	2	129957-59120	TUBE, CORRUGATED	1							
7	2	105025-59750	PIPE, FUEL	1							
8	1	129961-59310	PIPE ASSY, FUEL	1							
9	2	124766-59050	CLIP, HOSE 12	2							
10	2	129136-59110	PIPE, D13/7.5X270	1							
11	2	129961-59110	TUBE, CORRUGATED	1							
12	1	121750-59890	BAND, 140	1							
13	1	119225-52102	PUMP ASSY, FUEL FEED	1							
14	1	129242-55700	SEPARATOR ASSY	1							
15	2	129242-55720	CUP	1							
16	2	129242-55730	ELEMENT	1							
17	2	129242-55740	PLUG, DRAIN	1							
18	2	129242-55750	VALVE, AIR VENT	1							
19	2	129242-55760	GASKET	1							
20	2	129242-55770	FLOAT	1							
21	2	24311-000160	O-RING, 1AP16.0	1							
22	2	24321-000750	O-RING, 1AG75.0	1							
23	1	119802-55810	FILTER,FO	1							

N:Old ←Yes/No→ New. Q:Old ←No/Yes→ New. R:Old ←Yes/Yes→ New. S:Old ←No/No→ New. W:Add. Z:Discontinued. F:Interchangeable by set. K:Q'ty Change

Copyright (C) YANMAR GLOBAL CS CO., LTD. All RightsReserved.

Fig.17. STARTING MOTOR

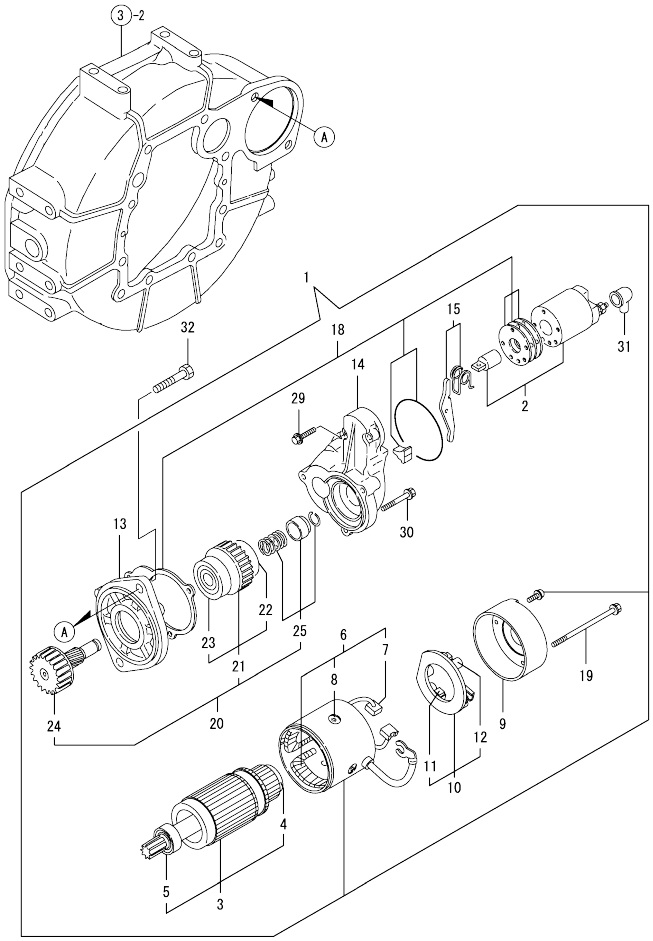

(A)=4TNV84T-ZKWLC
(B)=
(C)=
(D)=
(E)=
(F)=

No.	Lev.	Parts No.	Description	Q'ty (A)	(B)	(C)	(D)	(E)	(F)	I	R
1	1	129136-77011	STARTER	1							
2	2	129136-77310	SWITCH ASSY	1							
3	2	129900-77400	ARMATURE ASSY	1							
4	3	X2130350900	BALL BEARING	1							
5	3	X2114255110	BEARING, BALL	1							
6	2	129900-77440	COIL ASSY, FIELD	1							
7	3	129900-77450	BRUSH (+)	2							
8	3	171008-77450	SCREW	4							
9	2	129900-77460	COVER, REAR	1							
10	2	129900-77480	HOLDER ASSY, BRASH	1							
11	3	129900-77450	BRUSH (+)	2							
12	3	129400-77490	SPRING, BRUSH	4							
13	2	171008-77510	HOUSING ASSY, GEAR	1							
14	2	129136-77520	CENTER HOUSING	1							
15	2	171008-77540	LEVER SET, SHIFT	1							
18	2	129400-77571	DUST COVER,(NON-ASB.	1							
19	2	129900-77640	BOLT, THROUGHT	2							
20	2	171008-77650	PINION ASSY	1							
21	3	X2114555500	CLUTCH ASSY	1							
22	4	X2114955020	BALL BEARING	1							
23	4	X2240410100	BEARING, BALL	1							
24	3	171008-77660	SHAFT, PINION	1							
25	3	171008-77670	STOPPER SET, PINION	1							
29	2	26106-060322	BOLT, M6X 32 PLATED	2							
30	2	26106-060402	BOLT, M6X 40 PLATED	3							
31	2	171008-77750	COVER, M TERMINAL	1							
32	1	26116-120252	BOLT, M12X 25 PLATED	2							

N:Old ←Yes/No→ New. Q:Old ←No/Yes→ New. R:Old ←Yes/Yes→ New. S:Old ←No/No→ New. W:Add. Z:Discontinued. F:Interchangeable by set. K:Q'ty Change

Copyright (C) YANMAR GLOBAL CS CO., LTD. All RightsReserved.

Fig.18. GENERATOR

(A)=4TNV84T-ZKWLC (D)=
(B)= (E)=
(C)= (F)=

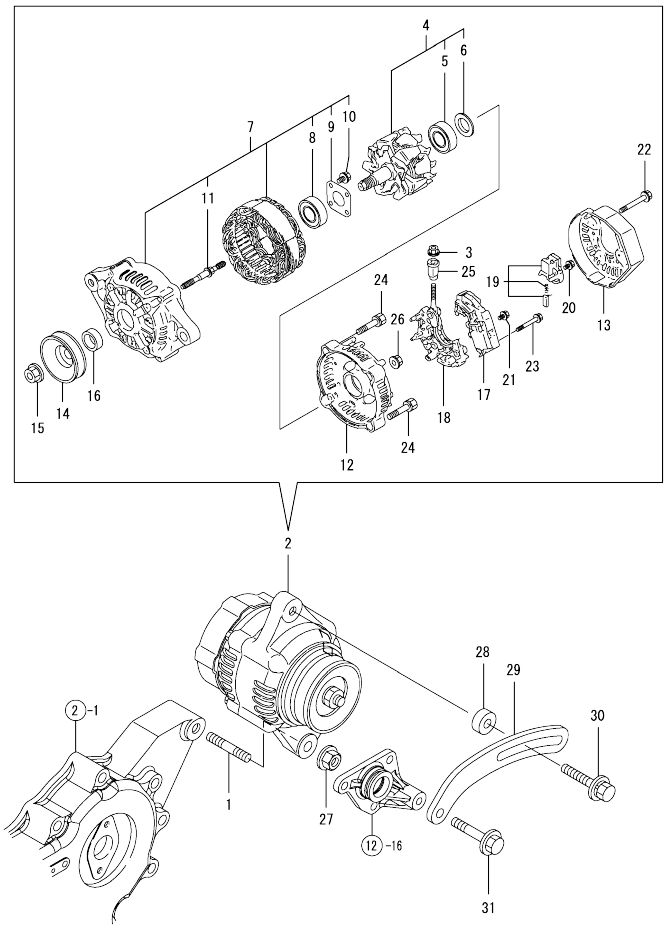

No.	Lev.	Parts No.	Description	Q'ty (A)	(B)	(C)	(D)	(E)	(F)	I	R
1	1	129795-01900	STUD	1							
2	1	119626-77210	ALTERNATOR, 12V-55A	1							
3	2	X9490561001	NUT	1							
4	2	129052-77380	ROTOR ASSY	1							
5	3	123501-79240	BEARING, BALL	1							
6	3	119620-79250	COVER, BEARING	1							
7	2	129052-77422	FRAME ASSY	1							
8	3	119620-79200	BALL BEARING	1							
9	3	119620-79210	PLATE, RETAINER	1							
10	3	119620-79220	SCREW	4							
11	3	119620-79230	STUD	2							
12	2	128401-77440	FRAME	1							
13	2	119626-77450	COVER, END, RR	1							
14	2	119620-77461	PULLEY	1							
15	2	119620-77471	NUT	1							
16	2	119620-77490	COLLAR	1							
17	2	119626-77710	REGULATOR ASSY	1							
18	2	129052-79260	HOLDER	1							
19	2	129052-79270	HOLDER, BRUSH	1							
20	2	119620-79290	SCREW	6							
21	2	119620-79300	SCREW	1							
22	2	119620-79310	BOLT	3							
23	2	119620-79320	SCREW	2							
24	2	119620-79330	BOLT	2							
25	2	119620-79340	BUSH, INSULATION	1							
26	2	119620-79350	NUT	2							
27	1	26306-100002	NUT, M10	1							
28	1	119940-77270	SPACER, GENERATOR	1							
29	1	119802-77330	ADJUSTER	1							
30	1	129972-77341	BOLT, ADJUSTER L=50	1							
31	1	26106-080452	BOLT, M8X 45 PLATED	1							

N:Old ←Yes/No→ New. Q:Old ←No/Yes→ New. R:Old ←Yes/Yes→ New. S:Old ←No/No→ New. W:Add. Z:Discontinued. F:Interchangeable by set. K:Q'ty Change

Copyright (C) YANMAR GLOBAL CS CO., LTD. All RightsReserved.

Fig.19. ELECTRONIC CONTROL UNIT (ECU)

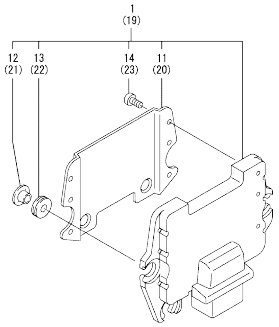

Remarks
(1)ECO ECU
THIS PART CANNOT BE ORDERED.
REPLACE THE PART USING A SERVICE ECU WITH THE PROPER ENGINE INFORMATION INSTALLED.
(2)SERVICE ECU
IF THE PROPER INFORMATION IS NOT INSTALLED, THE ENGINE WILL NOT OPERATE.
TO INSTALL PROPER INFORMATION, GO TO AN AUTHORIZED DISTRIBUTOR.

(A)=4TNV84T-ZKWLC
(B)=
(C)=
(D)=
(E)=
(F)=

No.	Lev.	Parts No.	Description	Q'ty (A)	(B)	(C)	(D)	(E)	(F)	I	R
1	1	129536-75060	CONTROLLER ASSY, EUC	1							1
11	2	129927-77600	SHIELD	1							
12	2	129927-77680	COLLAR	3							
13	2	119578-91351	ABSORBER	3							
14	2	22877-500080	SCREW, 5X 8	6							
19	1	129927-75900	CONTROLLER ASSY, EUC	1							2
20	2	129927-77600	SHIELD	1							
21	2	129927-77680	COLLAR	3							
22	2	119578-91351	ABSORBER	3							
23	2	22877-500080	SCREW, 5X 8	6							

N:Old ◄Yes/No► New. Q:Old ◄No/Yes► New. R:Old ◄Yes/Yes► New. S:Old ◄No/No► New. W:Add. Z:Discontinued. F:Interchangeable by set. K:Q'ty Change

Copyright (C) YANMAR GLOBAL CS CO., LTD. All RightsReserved.

Fig.20. ELECTRIC PARTS

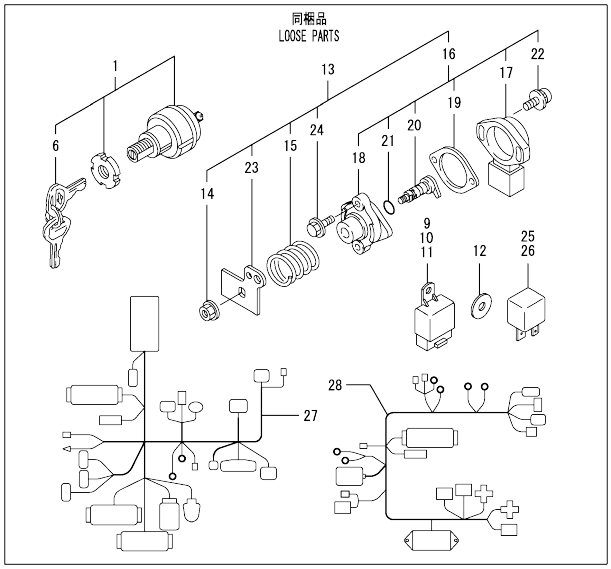

(A)=4TNV84T-ZKWLC (D)=
(B)= (E)=
(C)= (F)=

No.	Lev.	Parts No.	Description	Q'ty (A)	(B)	(C)	(D)	(E)	(F)	I	R
1	1	194215-52110	SWITCH, STARTING	1							
6	2	194155-52160	KEY ASSY	1							
9	1	198461-52950	RELAY, CA TYPE C	1							
10	1	198461-52950	RELAY, CA TYPE C	1							
11	1	198461-52950	RELAY, CA TYPE C	1							
12	1	129927-77690	WASHER	3							
13	1	129938-77800	SENSOR ASSY	1							
14	2	194990-22130	NUT, M6	1							
15	2	119060-61990	SPRING, RETURN	1							
16	2	129054-77800	SENSOR ASSY	1							
17	3	185100-50070	BODY	1							
18	3	129054-77811	SUPPORT	1							
19	3	129054-77820	GASKET, SUPPORT	1							
20	3	129054-77830	SHAFT ASY	1							
21	3	24311-000070	O-RING, 1AP7.0	1							
22	3	26023-040202	SCREW, M4X20	2							
23	2	129938-77810	LEVER	1							
24	2	26106-060122	BOLT, M6X 12 PLATED	2							
25	1	129927-77920	RELAY	1							
26	1	129927-77930	RELAY	1							
27	1	129927-91040	HARNESS, WIRE	1							
28	1	129927-91050	HARNESS, WIRE	1							

N:Old ◄Yes/No► New. Q:Old ◄No/Yes► New. R:Old ◄Yes/Yes► New. S:Old ◄No/No► New. W:Add. Z:Discontinued. F:Interchangeable by set. K:Q'ty Change

Copyright (C) YANMAR GLOBAL CS CO., LTD. All RightsReserved.

Fig.21. GASKET SET

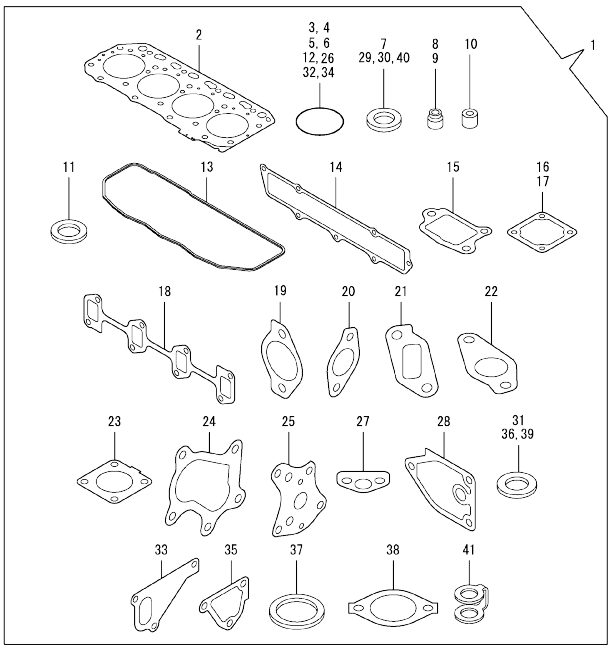

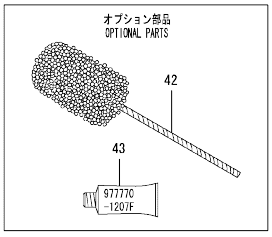

Remarks
(1) OPTIONAL PART.

(A)=4TNV84T-ZKWLC (D)=
(B)= (E)=
(C)= (F)=

No.	Lev.	Parts No.	Description	Q'ty (A)	(B)	(C)	(D)	(E)	(F)	I	R
1	1	729509-92640	GASKET SET	1							1
2	2	129508-01330	GASKET, HEAD	1							
3	2	119609-32040	O-RING, P16	2							
4	2	121850-51960	O-RING	1							
5	2	24311-000320	O-RING, 1AP32.0	2							
6	2	24341-000240	O-RING, 1AS24.0	1							
7	2	22190-220002	WASHER, SEAL 22	1							
8	2	119717-11340	SEAL, VALVE STEM	8							
9	2	119717-11350	SEAL, VALVE STEM	8							
10	2	119802-11870	PROTECTOR, NOZZLE	4							
11	2	119625-11880	SEAT, NOZZLE	4							
12	2	24311-000120	O-RING, 1AP12.0	7							
13	2	129508-11310	GASKET, BONNET	1							
14	2	129508-12110	GASKET, MANIFOLD	1							
15	2	129509-13720	GASKET	1							
16	2	129100-77510	GASKET, AIR HEATER	1							
17	2	129150-77511	GASKET	1							
18	2	129550-13110	GASKET	1							
19	2	129928-13410	GASKET	2							
20	2	129927-13810	GASKET	1							
21	2	129927-13910	GASKET	1							
22	2	129927-13920	GASKET	1							
23	2	129508-18080	GASKET	1							
24	2	129508-18090	GASKET	1							
25	2	129150-32020	GASKET, PUMP	1							
26	2	24316-240100	O-RING, 4DP10A	1							
27	2	129150-35042	GASKET	1							
28	2	129150-35111	GASKET	1							
29	2	22190-080002	WASHER, SEAL 6	3							
30	2	22190-100002	WASHER, SEAL 10	2							
31	2	23414-100000	GASKET, 10X1.0	2							
32	2	24316-000160	O-RING, 4DP16.0	1							
33	2	129486-42021	GASKET, WATER PUMP	1							
34	2	129486-42140	O-RING, G30	1							
35	2	124395-49840	GASKET	1							
36	2	23414-080000	GASKET, 8X1.0	1							
37	2	129150-49811	GASKET, THERMOSTAT	1							
38	2	129795-49551	GASKET	1							
39	2	124465-44950	GASKET, 16	1							
40	2	22190-120002	WASHER, SEAL 12	1							
41	2	123907-59550	GASKET	5							
42	1	129400-92420	FLEX HORN	1							1
43	1	977770-1207F	GASKET.LIQUID	1							1

N:Old $\frac{\text{Yes}}{\text{No}}$ New. Q:Old $\frac{\text{No}}{\text{Yes}}$ New. R:Old $\frac{\text{Yes}}{\text{Yes}}$ New. S:Old $\frac{\text{No}}{\text{No}}$ New. W:Add. Z:Discontinued. F:Interchangeable by set. K:Q'ty Change

Copyright (C) YANMAR GLOBAL CS CO., LTD. All RightsReserved.

Parts No. Index

Parts No.	Fig. No.	Ref. No.
105025-59750	16	7
105430-67110	12	55
114250-53080	15	5
114250-53120	15	9
114250-53130	15	10
114250-53140	15	11
114250-53210	15	12
119005-12571	5	22
		27
119060-61990	20	15
119140-12680	5	28
119225-52102	16	13
119260-34810	10	17
119305-59120	15	41
119578-91351	19	13
		22
119609-32040	2	9
	21	3
119620-01750	3	3
119620-77461	18	14
119620-77471	18	15
119620-77490	18	16
119620-79200	18	8
119620-79210	18	9
119620-79220	18	10
119620-79230	18	11
119620-79250	18	6
119620-79290	18	20
119620-79300	18	21
119620-79310	18	22
119620-79320	18	23
119620-79330	18	24
119620-79340	18	25
119620-79350	18	26
119625-11880	4	44
	21	11
119626-77210	18	2
119626-77450	18	13
119626-77710	18	17
119640-01640	3	8
119640-61400	4	65
119717-11190	4	34
119717-11340	4	35
	21	8
119717-11350	4	36
	21	9
119717-11800	4	42
119761-39450	11	1
119802-01561	2	5
119802-03070	4	54

Parts No.	Fig. No.	Ref. No.
119802-11870	4	43
	21	10
119802-13790	6	11
119802-13820	6	7 -1
119802-21660	9	8
119802-25071	7	13
119802-25101	7	10
119802-25901	7	16
119802-35110	10	28
119802-39500	11	5
119802-51090	13	16
119802-51560	13	62
119802-51680	13	72
119802-51690	13	73
119802-55810	16	2
		23
119802-77330	18	29
119803-01520	2	4
119803-21200	9	4
119803-25050	7	9
119803-53400	15	13
119808-12540	5	26
119852-51630	13	77
119852-51640	13	78
119852-51650	13	80
119865-21600	9	14
119934-01800	2	3
119934-59910	13	130
119940-59130	10	40
119940-77270	18	28
121023-01551	2	19
121111-21501	9	11
121252-39150	11	3
121450-42450	12	34
121550-23200	9	26
121750-59890	16	12
121850-21680	9	10
121850-42410	12	8
121850-51960	2	10
	21	4
123501-79240	18	5
123900-13630	6	6
123901-39820	11	17
123907-03100	4	57
123907-03110	4	58
123907-03120	4	59
123907-03140	4	60
123907-11550	4	21
123907-11601	15	40
123907-11830	4	40

Parts No.	Fig. No.	Ref. No.
123907-59540	15	54
123907-59550	15	56
	21	41
123907-59560	15	61
124060-01050	1	4
124070-13300	11	15
124160-01751	2	6
	4	51
124160-01910	1	6
		7
124160-11360	4	72
124160-39140	11	2
124223-39900	11	6
124240-01871	2	7
124395-49840	12	18
	21	35
124465-44950	12	36
	21	39
124722-59050	15	58
124766-59050	16	5
		9
128401-77440	18	12
129001-01250	1	5
129001-02931	1	29
129001-11340	4	63
129004-42040	12	16
129004-55612	16	1
129005-59830	11	7
129006-35100	10	27
129006-44480	10	32
129008-51390	13	44
129008-61301	14	20
129009-11340	4	64
129052-77380	18	4
129052-77422	18	7
129052-79260	18	18
129052-79270	18	19
129054-77800	20	16
129054-77811	20	18
129054-77820	20	19
129054-77830	20	20
129100-01580	3	1
		15
	9	2
129100-23910	9	29
129100-42051	12	3
129100-42121	12	4
129100-77501	5	14
129100-77510	5	15
	21	16

Parts No.	Fig. No.	Ref. No.
129103-49301	10	42
129136-59110	16	10
129136-77011	17	1
129136-77310	17	2
129136-77520	17	14
129150-01200	1	27
129150-02020	1	9
129150-02450	7	4
129150-02871	1	32
129150-02931	1	24
129150-02941	1	35
129150-03070	4	55
129150-11230	4	12
		16
129150-11750	4	14
		18
		39
129150-14101	7	6
129150-14200	7	1
129150-14400	7	2
129150-23601	9	27
129150-23611	9	30
129150-25301	7	15
129150-32020	10	14
	21	25
129150-35042	10	21
	21	27
129150-35111	10	30
	21	28
129150-35160	10	31
129150-35170	10	45
129150-49811	12	30
	21	37
129150-59131	15	44
		48
129150-77511	5	16
	21	17
129155-42350	12	24
129155-49801	12	29
129202-22300	9	21
129242-55700	16	14
129242-55720	16	15
129242-55730	16	16
129242-55740	16	17
129242-55750	16	18
129242-55760	16	19
129242-55770	16	20
129244-34802	10	16
129263-51251	13	137
129263-77941	13	6

Parts No. Index

Parts No.	Fig. No.	Ref. No.
129350-49530	12	31
129400-01730	3	6
129400-77490	17	12
129400-77571	17	18
129400-92420	21	42
129417-33110	10	26
129417-35150	10	29
129418-18320	6	4
		5
	8	3
129418-32000	10	1
129436-01780	3	7
129436-35070	10	22 -1
129436-35091	10	22
129457-12530	5	25
129457-59010	16	4
129486-01670	3	19
129486-07901	4	1
129486-42021	12	15
	21	33
129486-42140	12	17
	21	34
129489-21590	9	12
129508-01330	1	28
	21	2
129508-03010	4	53
129508-11100	4	30
129508-11110	4	31
129508-11130	4	32
129508-11180	4	33
129508-11241	4	5
129508-11250	4	6
129508-11260	4	8
129508-11270	4	9
129508-11280	4	10
129508-11310	4	62
	21	13
129508-11650	4	11
129508-11660	4	15
129508-11820	4	41
129508-11900	4	45
129508-11920	4	19
129508-12110	5	2
	21	14
129508-14580	7	3
129508-18010	8	1
129508-18080	8	2
	21	23
129508-18090	8	5
	21	24

Parts No.	Fig. No.	Ref. No.
129508-33010	10	24
129508-33050	10	25
129508-39450	11	4
129508-39600	11	16
129508-49030	10	33
129508-49040	10	37
129508-59550	15	55
129508-59910	15	50
129508-59920	15	51
129508-59930	15	52
129508-59940	15	53
129509-03050	5	20
129509-11350	4	52
129509-11700	4	22
129509-12060	5	1
129509-12100	5	4
129509-12150	5	3
129509-13100	6	3
129509-13150	6	2
129509-13400	6	8
129509-13700	5	5
129509-13710	5	6
129509-13720	5	7
	21	15
129509-13810	6	13
129509-21000	9	1
129509-22080	9	15
129509-22500	9	17
129509-42010	12	1
129509-49610	12	47
129509-49620	12	51
129509-49630	12	38
129509-49640	12	42
129509-59550	15	57
129509-79700	4	66
129530-53000	15	2
129536-34860	10	18
129536-75060	19	1
129550-13110	6	1
	21	18
129550-59120	15	45
129553-39650	11	27
129601-12610	5	23
129612-01600	3	2
129648-01600	3	16
129648-01780	3	18
129648-13520	6	25
129648-13570	6	26
129648-44700	12	26
129657-51590	13	67

Parts No.	Fig. No.	Ref. No.
129657-51600	13	68
129672-11510	4	37
129693-44310	6	7
129792-39410	11	21
129795-01900	18	1
129795-01950	2	8
129795-02412	1	12
129795-21661	9	9
129795-49551	12	32
	21	38
129900-77400	17	3
129900-77440	17	6
129900-77450	17	7
		11
129900-77460	17	9
129900-77480	17	10
129900-77640	17	19
129906-12520	5	21
		24
129907-03070	4	56
129907-11950	4	46
129916-49740	12	12
129927-13810	6	14
	21	20
129927-13910	6	21
	21	21
129927-13920	6	22
	21	22
129927-44900	12	35
129927-51650	13	4
129927-51660	13	5
129927-51670	13	8
129927-75900	19	19
129927-77600	19	11
		20
129927-77680	19	12
		21
129927-77690	20	12
129927-77920	20	25
129927-77930	20	26
129927-91040	20	27
129927-91050	20	28
129928-07900	4	2
129928-13410	6	9
		10
	21	19
129928-13800	6	12
129928-13900	6	20
129928-49420	12	10
		46

Parts No.	Fig. No.	Ref. No.
129938-77800	20	13
129938-77810	20	23
129957-59120	16	6
129960-03990	12	48
		52
129961-59110	16	11
129961-59310	16	8
129972-77341	18	30
158552-51151	13	19
158552-51571	13	63
		64
158552-51580	13	66
158552-51670	13	9
158552-51781	13	104
158552-52100	13	128
158552-52310	13	113
158552-52400	13	114
158552-52500	13	129
158553-51670	13	71
158553-51680	13	83
158553-51770	13	110
158553-51930	13	107
	14	2
158553-61780	14	24
158557-51570	13	65
158557-61720	14	23
158563-51281	13	42
		43
158563-51330	13	53
158600-51270	13	41
158601-51550	13	61
158601-51650	13	7
158601-51770	13	103
158601-51790	13	105
171008-03990	10	34
		38
171008-77450	17	8
171008-77510	17	13
171008-77540	17	15
171008-77650	17	20
171008-77660	17	24
171008-77670	17	25
171008-77750	17	31
171051-01921	1	8
171056-49120	10	44
171340-77520	5	17
171353-44760	12	27
175339-79700	4	67
185100-50070	20	17
194155-52160	20	6

Parts No. Index

Parts No.	Fig. No.	Ref. No.
194215-52110	20	1
194990-22130	20	14
198461-52950	20	9
		10
		11
22190-080002	2	11
	11	8
		10
	15	62
	21	29
22190-100002	11	11
	21	30
22190-120002	12	37
	13	108
		115
		131
	14	25
	21	40
22190-180002	13	109
22190-220002	3	10
	21	7
22217-050000	13	132
22217-140000	13	116
22252-000260	9	22
22312-050140	13	117
22351-030010	9	7
	11	28
22351-050010	13	118
22351-060012	4	47
22512-070140	7	7
	9	5
22857-500100	4	68
		69
		70
22857-500160	5	8
22877-500080	19	14
		23
23000-025000	11	18
23000-048000	5	10
23000-060000	5	11
23080-012000	12	41
		45
23080-015000	10	36
		41
23414-080000	12	19
	21	36
23414-100000	11	12
	21	31
23857-030000	11	9
23876-010000	12	13

Parts No.	Fig. No.	Ref. No.
23876-020000	4	28
	12	14
24311-000070	13	120
	20	21
24311-000120	4	48
		73
	21	12
24311-000160	16	21
24311-000320	2	12
	4	74
	21	5
24316-000160	11	19
	21	32
24316-240100	10	19
	21	26
24321-000750	16	22
24341-000240	2	20
	21	6
24341-000480	14	26
24356-010180	13	121
24356-010200	13	74
		122
24372-000150	13	75
25132-003800	12	25
26023-040202	20	22
26106-060102	13	123
26106-060122	4	71
	20	24
26106-060142	13	133
26106-060162	2	21
	11	20
	14	27
26106-060202	14	28
26106-060322	17	29
26106-060402	12	28
	17	30
26106-080122	11	13
	12	20
		56
26106-080142	7	8
26106-080162	2	13
		14
	3	11
	4	3
	10	20
	12	21
	13	138
26106-080202	4	4
	5	9
		12

Parts No.	Fig. No.	Ref. No.
26106-080202	10	43
26106-080222	12	33
26106-080252	3	12
	4	49
	14	29
26106-080302	2	15
	16	3
26106-080352	3	20
	6	15
	10	23
26106-080402	5	18
	7	14
26106-080452	3	13
	6	16
	12	22
	18	31
26106-080502	3	14
	4	50
26106-080552	2	16
	6	17
	10	23 -1
26106-080602	12	23
26106-080802	5	19
26106-080852	2	17
26106-080902	5	13
26106-100252	6	18
26106-100402	6	23
26106-101052	6	24
26116-120252	17	32
26206-100252	3	4
26206-100302	3	5
26226-080352	4	20
26306-080002	2	18
	6	19
	8	4
26306-100002	18	27
26366-060002	11	14
26450-060252	10	15
26450-080452	13	125
26716-050002	13	134
26776-140002	13	126
27241-120000	1	13
27241-160000	13	135
27241-300000	1	14
27241-400000	4	29
719803-01500	2	1
729402-23100	9	23
729509-01560	1	1
729509-22900	9	32
729509-22950	9	34

Parts No.	Fig. No.	Ref. No.
729509-92640	21	1
729530-53200	15	1
729536-51340	13	1
977770-1207F	21	43
X2114255110	17	5
X2114555500	17	21
X2114955020	17	22
X2130350900	17	4
X2240410100	17	23
X9490561001	18	3