YANMAR

PARTS CATALOG

0CW10-M75900EN

Last update Mar., 2013

PREFACE

1. This parts catalog is the 1st edition of 4TNV84T-ZMTR for THE TORO COMPANY.

Pub.No. : 0CW10-G75900
Published : August, 2012

2. Model name

Engine model	Vehicle	Vehicle made by
4TNV84T-ZMTR	MOWER	THE TORO COMPANY

Contents

0CW10-M75900

Fig. No.	Fig. Name
4TNV84T-ZMTR	
1.	CYLINDER BLOCK
2.	GEAR HOUSING
3.	FLYWHEEL HOUSING & OIL SUMP
4.	CYLINDER HEAD & BONNET
5.	SUCTION MANIFOLD
6.	EXHAUST MANIFOLD & SILENCER
7.	CAMSHAFT & DRIVING GEAR
8.	TURBINE
9.	CRANKSHAFT & PISTON
10.	LUB. OIL SYSTEM
11.	LUB. OIL LINE
12.	COOLING WATER SYSTEM
13.	FUEL INJECTION PUMP
14.	GOVERNOR
15.	FUEL INJECTION VALVE
16.	STARTING MOTOR
17.	GENERATOR
18.	ELECTRONIC CONTROL UNIT (ECU)
19.	GASKET SET

Fig. No.	Fig. Name

Fig.1. CYLINDER BLOCK

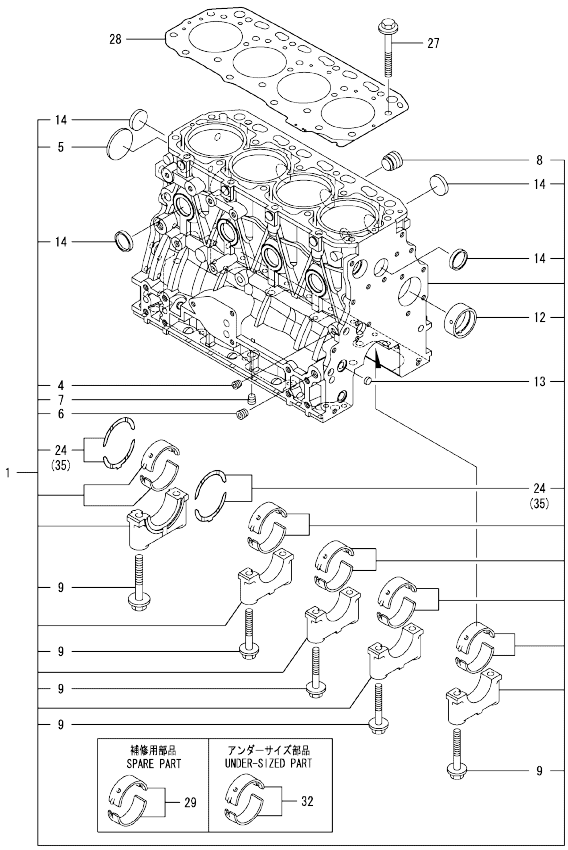

Remarks
(1)Spare parts.
(2)Under-sized(U.S.=0.25)part.
(3)Over-sized(O.S.=0.25)part.

(A)=4TNV84T-ZMTR (D)=
(B)= (E)=
(C)= (F)=

No.	Lev.	Parts No.	Description	Q'ty (A)	(B)	(C)	(D)	(E)	(F)	I	R
1	1	729509-01560	BLOCK ASSY, CYLINDER	1							
4	2	124060-01050	PLUG, PT1/8	1							
5	2	129001-01250	PLUG, 50	1							
6	2	124160-01910	PLUG, PT1/4	2							
7	2	124160-01910	PLUG, PT1/4	1							
8	2	171051-01921	PLUG, NPTF1	1							
9	2	129150-02020	BOLT, METAL CAP	10							
12	2	129795-02412	BUSH, CAMSHAFT	1							
13	2	27241-120000	PLUG, 12	2							
14	2	27241-300000	PLUG 30	8							
24	2	129150-02931	BEARING, THRUST	2							
27	1	129150-01200	BOLT, HEAD	18							
28	1	129508-01330	GASKET, HEAD	1							
29	1	129001-02931	BEARING, MAIN	5							1
32	1	129150-02871	BEARING, 0.25 US	5							2
35	1	129150-02941	BEARING, THRUST 0.25	1							3

N:Old $\xleftarrow[\text{No}]{\text{Yes}}$ New. Q:Old $\xleftarrow[\text{Yes}]{\text{No}}$ New, R:Old $\xleftarrow[\text{Yes}]{\text{Yes}}$ New. S:Old $\xleftarrow[\text{No}]{\text{No}}$ New. W:Add. Z:Discontinued. F:Interchangeable by set. K:Q'ty Change

Copyright (C) YANMAR GLOBAL CS CO., LTD. All RightsReserved.

Fig.2. GEAR HOUSING

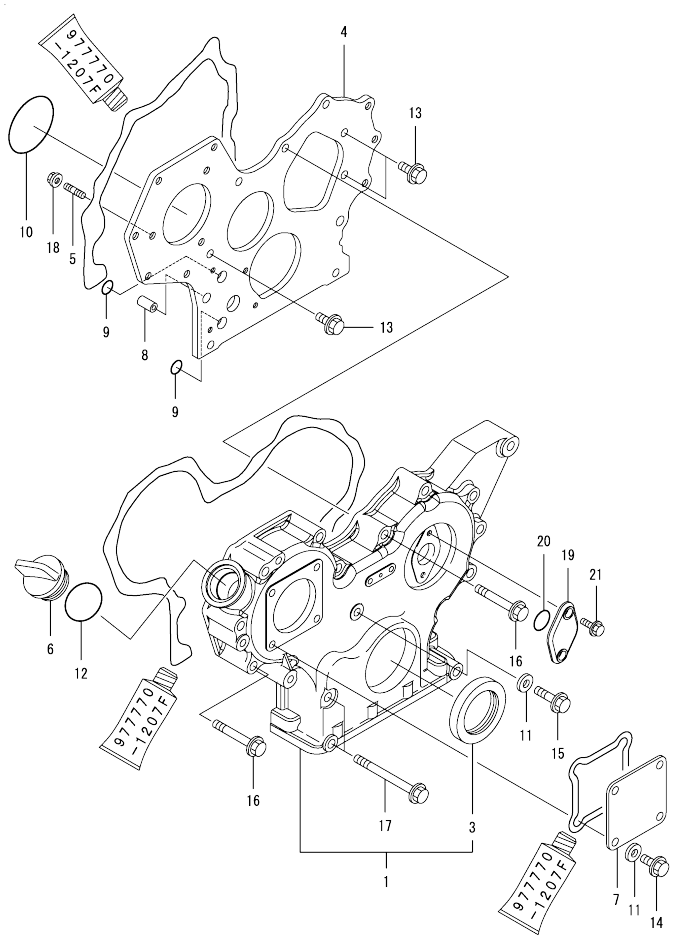

(A)=4TNV84T-ZMTR (D)=
(B)= (E)=
(C)= (F)=

No.	Lev.	Parts No.	Description	Q'ty (A)	(B)	(C)	(D)	(E)	(F)	I	R
1	1	729630-01500	CASE ASSY, GEAR	1							
3	2	119934-01800	SEAL, OIL	1							
4	1	119803-01520	FLANGE, GEAR CASE	1							
5	1	119802-01561	STUD, M8X25	3							
6	1	124160-01751	COVER, FILLER	1							
7	1	124240-01871	COVER	1							
8	1	129795-01950	PIPE, KNOCK L=18	2							
9	1	119609-32040	O-RING, P16	2							
10	1	121850-51960	O-RING	1							
11	1	22190-080002	WASHER, SEAL 6	5							
12	1	24311-000320	O-RING, 1AP32.0	1							
13	1	26106-080162	BOLT, M8X 16 PLATED	3							
14	1	26106-080162	BOLT, M8X 16 PLATED	4							
15	1	26106-080302	BOLT, M8X 30 PLATED	1							
16	1	26106-080552	BOLT, M8X 55 PLATED	12							
17	1	26106-080852	BOLT, M8X 85 PLATED	3							
18	1	26306-080002	NUT, M8	3							
19	1	121023-01551	COVER	1							
20	1	24341-000240	O-RING, 1AS24.0	1							
21	1	26106-060162	BOLT, M6X 16 PLATED	2							

N:Old ←Yes/No→ New. Q:Old ←No/Yes→ New. R:Old ←Yes/Yes→ New. S:Old ←No/No→ New. W:Add. Z:Discontinued. F:Interchangeable by set. K:Q'ty Change

Copyright (C) YANMAR GLOBAL CS CO., LTD. All RightsReserved.

Fig.3. FLYWHEEL HOUSING & OIL SUMP

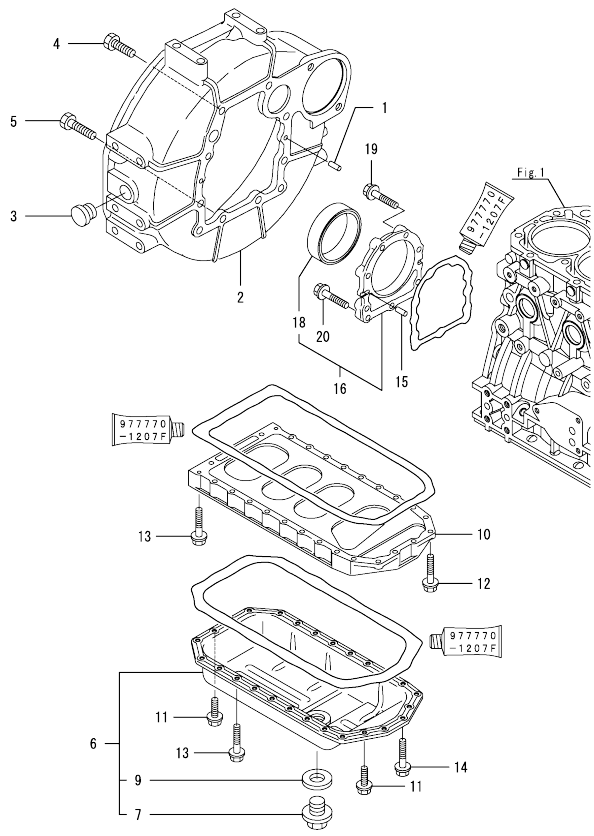

(A)=4TNV84T-ZMTR (D)=
(B)= (E)=
(C)= (F)=

No.	Lev.	Parts No.	Description	Q'ty (A)	(B)	(C)	(D)	(E)	(F)	I	R
1	1	129100-01580	PIN, M8X16	2							
2	1	129612-01600	HOUSING, FLYWHEEL	1							
3	1	119620-01750	CAP	1							
4	1	26206-100252	BOLT, M10X 25 PLATED	6							
5	1	26206-100302	BOLT, M10X 30 PLATED	4							
6	1	729402-01540	SUMP ASSY, OIL	1							
7	2	119640-01640	PLUG, DRAIN M22	1							
9	2	22190-220002	WASHER, SEAL 22	1							
10	1	129400-01730	SPACER, OIL SUMP	1							
11	1	26106-080162	BOLT, M8X 16 PLATED	4							
12	1	26106-080252	BOLT, M8X 25 PLATED	2							
13	1	26106-080452	BOLT, M8X 45 PLATED	20							
14	1	26106-080502	BOLT, M8X 50 PLATED	4							
15	1	129100-01580	PIN, M8X16	2							
16	1	129100-01640	CASE ASSY, OIL SEAL	1							
18	2	129795-01780	SEAL, OIL	1							
19	1	129486-01670	BOLT, M8X30	6							
20	1	26106-080352	BOLT, M8X 35 PLATED	3							

N:Old ◄Yes/No► New. Q:Old ◄No/Yes► New. R:Old ◄Yes/Yes► New. S:Old ◄No/No► New. W:Add. Z:Discontinued. F:Interchangeable by set. K:Q'ty Change

Copyright (C) YANMAR GLOBAL CS CO., LTD. All RightsReserved.

Fig.4. CYLINDER HEAD & BONNET

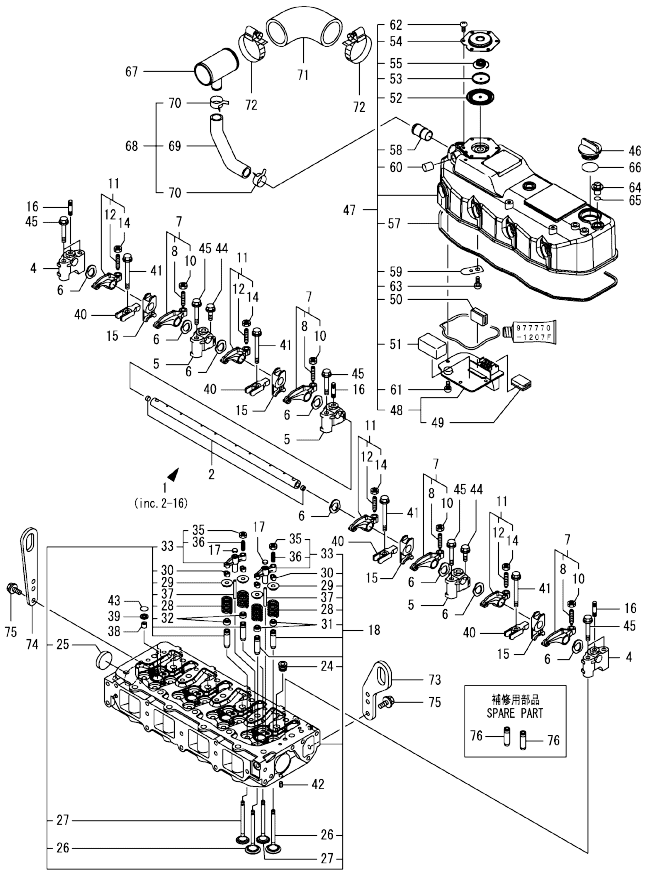

(A)=4TNV84T-ZMTR
(B)=
(C)=
(D)=
(E)=
(F)=

No.	Lev.	Parts No.	Description	Q'ty (A)	(B)	(C)	(D)	(E)	(F)	I	R
1	1	129508-11241	SHAFT ASSY, ROCKER	1							
2	2	129508-11250	SHAFT, ROCKER ARM	1							
4	2	129508-11260	SUPPORT, ROCKER ARM	2							
5	2	129508-11270	SUPPORT, ROCKER ARM	3							
6	2	129508-11280	WASHER	8							
7	2	129508-11650	ARM, ROCKER	4							
8	3	129150-11230	SCREW, VALVE ADJUST	4							
10	3	129150-11750	NUT, M8	4							
11	2	129508-11660	ARM, ROCKER	4							
12	3	129150-11230	SCREW, VALVE ADJUST	4							
14	3	129150-11750	NUT, M8	4							
15	2	129508-11920	RETAINER	4							
16	2	26226-080352	STUD, M8X 35	3							
17	1	123907-11550	SEAT, VALVE BRIDGE	8							
18	1	129509-11700	HEAD ASSY, CYLINDER	1							
24	2	23876-020000	PLUG, R02	4							
25	2	27241-400000	PLUG, 40	2							
26	2	129508-11100	VALVE, INTAKE	8							
27	2	129508-11110	VALVE, EXHAUST	8							
28	2	129508-11130	SPRING, VALVE	16							
29	2	129508-11180	RETAINER, SPRING	16							
30	2	119717-11190	COTTER	32							
31	2	119717-11340	SEAL, VALVE STEM	8							
32	2	119717-11350	SEAL, VALVE STEM	8							
33	2	129672-11510	BRIDGE ASSY, VALVE	8							
35	3	129150-11750	NUT, M8	8							
36	3	123907-11830	ADJUSTER	8							
37	2	129508-11820	GUIDE	8							
38	1	119802-11870	PROTECTOR, NOZZLE	4							
39	1	119625-11880	SEAT, NOZZLE	4							
40	1	129508-11900	RETAINER, NOZZLE	4							
41	1	129907-11950	BOLT, M8X75	4							
42	1	22351-060012	PIN, SPRING 6.0X12	2							
43	1	24311-000120	O-RING, 1AP12.0	4							
44	1	26106-080252	BOLT, M8X 25 PLATED	3							
45	1	26106-080502	BOLT, M8X 50 PLATED	7							
46	1	124160-01751	COVER, FILLER	1							
47	1	129584-11350	BONNET ASSY, HEAD	1							
48	2	129508-03010	PLATE	1							
49	3	119802-03070	BAFFLE, BREATHER	1							
50	2	129150-03070	BAFFLE, BREATHER	1							
51	2	129907-03070	BAFFLE, BREATHER	1							
52	2	123907-03100	DIAPHRAGM	1							
53	2	123907-03110	PLATE	1							
54	2	123907-03120	PLATE, BREATHER	1							
55	2	123907-03140	SPRING, DIAPHRAGM	1							
57	2	129508-11310	GASKET, BONNET	1							
58	2	129001-11340	PIPE , BREATHER	1							
59	2	129009-11340	SPRING	1							
60	2	119640-61400	PLUG	1							
61	2	22857-500100	SCREW, 5X10	4							

Remarks
(1)Spare parts.

N:Old ←Yes/No→ New. Q:Old ←No/Yes→ New. R:Old ←Yes/Yes→ New. S:Old ←No/No→ New. W:Add. Z:Discontinued. F:Interchangeable by set. K:Q'ty Change

++ CONTINUE ++

Copyright (C) YANMAR GLOBAL CS CO., LTD. All RightsReserved.

Fig.4. CYLINDER HEAD & BONNET

(A)=4TNV84T-ZMTR
(B)=
(C)=
(D)=
(E)=
(F)=

No.	Lev.	Parts No.	Description	Q'ty (A)	(B)	(C)	(D)	(E)	(F)	I	R
62	2	22857-500100	SCREW, 5X10	6							
63	2	22857-500100	SCREW, 5X10	1							
64	1	124160-11360	KNOB	3							
65	1	24311-000120	O-RING, 1AP12.0	3							
66	1	24311-000320	O-RING, 1AP32.0	1							
67	1	129509-03050	JOINT, BREATHER	1							
68	1	129509-03080	HOSE ASSY, BREATHER	1							
69	2	129509-03090	HOSE, BREATHER	1							
70	2	129410-03990	CLIP	2							
71	1	129509-12070	PIPE, AIR INTAKE	1							
72	1	23000-060000	CLAMP, 60	2							
73	1	129486-07901	LIFTER	1							
74	1	129900-07900	LIFTER	1							
75	1	26106-080162	BOLT, M8X 16 PLATED	4							
76	1	119717-11800	GUIDE, VALVE	16							1

Remarks
(1)Spare parts.

N:Old ←Yes/No→ New. Q:Old ←No/Yes→ New. R:Old ←Yes/Yes→ New. S:Old ←No/No→ New. W:Add. Z:Discontinued. F:Interchangeable by set. K:Q'ty Change

Copyright (C) YANMAR GLOBAL CS CO., LTD. All RightsReserved.

Fig.5. SUCTION MANIFOLD

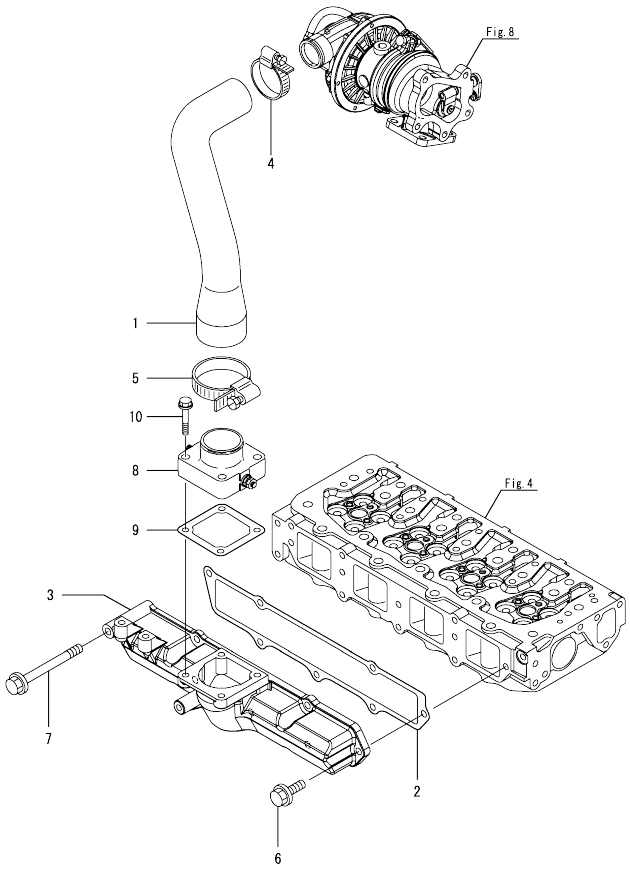

(A)=4TNV84T-ZMTR
(B)=
(C)=
(D)=
(E)=
(F)=

No.	Lev.	Parts No.	Description	Q'ty (A)	(B)	(C)	(D)	(E)	(F)	I	R
1	1	129508-12070	PIPE, AIR INTAKE	1							
2	1	129508-12110	GASKET, MANIFOLD	1							
3	1	129508-12121	MANIFOLD,INTAKE	1							
4	1	23000-048000	CLAMP, 48	1							
5	1	23000-060000	CLAMP, 60	1							
6	1	26106-080202	BOLT, M8X 20 PLATED	6							
7	1	26106-080802	BOLT, M8X 80 PLATED	1							
8	1	129120-77502	HEATER	1							
9	1	129150-77511	GASKET	1							
10	1	26106-080352	BOLT, M8X 35 PLATED	4							

N:Old ◄Yes/No► New. Q:Old ◄No/Yes► New. R:Old ◄Yes/Yes► New. S:Old ◄No/No► New. W:Add. Z:Discontinued. F:Interchangeable by set. K:Q'ty Change

Copyright (C) YANMAR GLOBAL CS CO., LTD. All RightsReserved.

Fig.6. EXHAUST MANIFOLD & SILENCER

(A)=4TNV84T-ZMTR (D)=
(B)= (E)=
(C)= (F)=

No.	Lev.	Parts No.	Description	Q'ty (A)	(B)	(C)	(D)	(E)	(F)	I	R
1	1	129533-13100	MANIFOLD, EXHAUST	1							
2	1	129550-13110	GASKET	1							
3	1	119802-13650	BOLT, M8X65	3							
4	1	119802-13670	BOLT, M8X85	1							
5	1	119802-13820	BOLT, M8X100 9.8T	4							
6	1	119131-18320	STUD, M8X22	4							
7	1	129533-13500	SILENCER	1							
8	1	129538-13540	SUPPORT, SILENCER	1							
9	1	129508-18090	GASKET	1							
10	1	26106-080142	BOLT, M8X 14 PLATED	2							
11	1	26106-080202	BOLT, M8X 20 PLATED	2							
12	1	26306-080002	NUT, M8	5							

N:Old ◄Yes/No► New. Q:Old ◄No/Yes► New. R:Old ◄Yes/Yes► New. S:Old ◄No/No► New. W:Add. Z:Discontinued. F:Interchangeable by set. K:Q'ty Change

Copyright (C) YANMAR GLOBAL CS CO., LTD. All RightsReserved.

Fig.7. CAMSHAFT & DRIVING GEAR

(A)=4TNV84T-ZMTR (D)=
(B)= (E)=
(C)= (F)=

No.	Lev.	Parts No.	Description	Q'ty (A)	(B)	(C)	(D)	(E)	(F)	I	R
1	1	129150-14200	TAPPET	8							
2	1	129150-14400	ROD, PUSH L=178	8							
3	1	129508-14580	CAMSHAFT ASSY	1							
4	2	129150-02450	BEARING, THRUST	1							
6	2	129150-14101	GEAR, CAMSHAFT	1							
7	2	22512-070140	KEY, 7X 14	1							
8	1	26106-080142	BOLT, M8X 14 PLATED	2							
9	1	119803-25050	SHAFT, IDLE	1							
10	1	119802-25101	GEAR ASSY, IDLE	1							
13	1	26106-080402	BOLT, M8X 40 PLATED	3							
14	1	129150-25301	BOLT	4							
15	1	119802-25901	GEAR, PUMP	1							
16	1	119802-25071	BUSH, IDLE GEAR	1							1

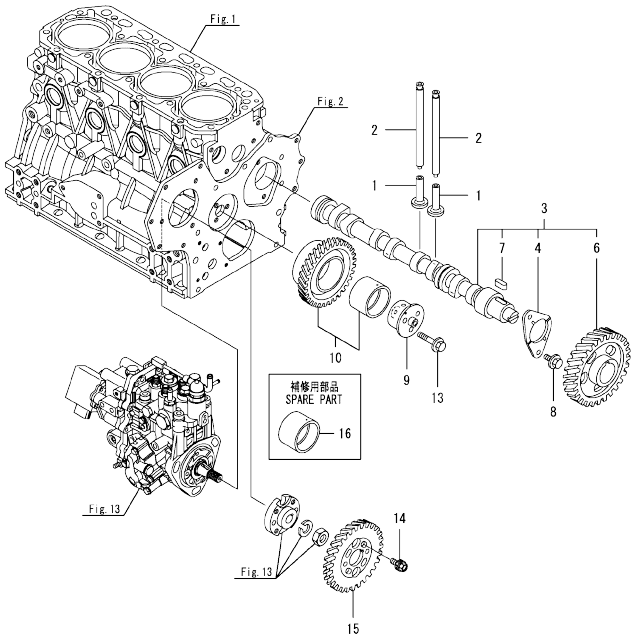

Remarks
(1)Spare parts.

N:Old $\frac{\text{Yes}}{\text{No}}$ New. Q:Old $\frac{\text{No}}{\text{Yes}}$ New. R:Old $\frac{\text{Yes}}{\text{Yes}}$ New. S:Old $\frac{\text{No}}{\text{No}}$ New. W:Add. Z:Discontinued. F:Interchangeable by set. K:Q'ty Change

Copyright (C) YANMAR GLOBAL CS CO., LTD. All RightsReserved.

Fig.8. TURBINE

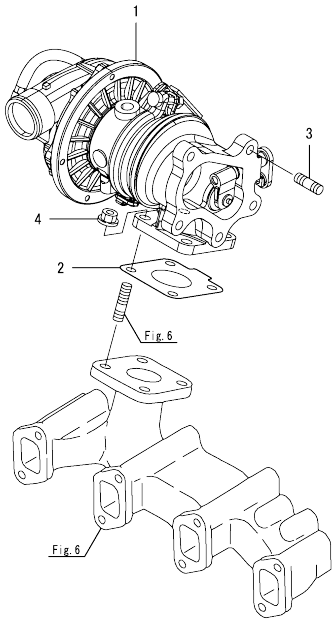

(A)=4TNV84T-ZMTR
(B)=
(C)=
(D)=
(E)=
(F)=

No.	Lev.	Parts No.	Description	Q'ty (A)	(B)	(C)	(D)	(E)	(F)	I	R
1	1	129508-18010	TURBINE, RHF4	1							
2	1	129508-18080	GASKET	1							
3	1	129418-18320	STUD, M8X20	5							
4	1	26306-080002	NUT, M8	4							

N:Old ◄Yes/No► New. Q:Old ◄No/Yes► New. R:Old ◄Yes/Yes► New. S:Old ◄No/No► New. W:Add. Z:Discontinued. F:Interchangeable by set. K:Q'ty Change

Copyright (C) YANMAR GLOBAL CS CO., LTD. All RightsReserved.

Fig.9. CRANKSHAFT & PISTON

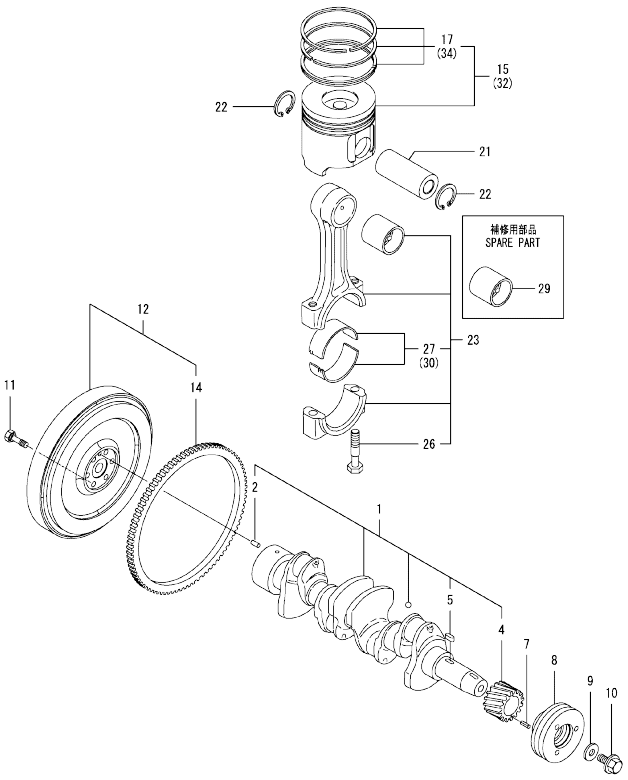

Remarks
(1)Spare parts.
(2)Under-sized(U.S.=0.25)part.
(3)Over-sized(O.S.=0.25)part.

(A)=4TNV84T-ZMTR (D)=
(B)= (E)=
(C)= (F)=

No.	Lev.	Parts No.	Description	Q'ty (A)	(B)	(C)	(D)	(E)	(F)	I	R
1	1	129509-21000	CRANKSHAFT ASSY	1							
2	2	129100-01580	PIN, M8X16	1							
4	2	119803-21200	GEAR, CRANKSHAFT	1							
5	2	22512-070140	KEY, 7X 14	1							
7	1	22351-030010	PIN, SPRING 3.0X10	1							
8	1	119802-21650	V-PULLEY, 110	1							
9	1	129795-21661	WASHER	1							
10	1	121850-21680	BOLT	1							
11	1	121111-21501	BOLT, FLYWHEEL	6							
12	1	171420-21580	FLYWHEEL ASSY	1							
14	2	119865-21600	GEAR, RING	1							
15	1	129508-22080	PISTON ASSY	4							
17	2	129004-22500	RING SET, PISTON	4							
21	1	129202-22300	PIN, PISTON D26 L70	4							
22	1	22252-000260	RING, 26	8							
23	1	729402-23100	ROD ASSY, CONNECTING	4							
26	2	121550-23200	BOLT, CONNECTING ROD	8							
27	2	129150-23601	BEARING, CRANK PIN	4							
29	1	129100-23910	BEARING, PISTON PIN	4							1
30	1	129150-23611	BEARING, 0.25 US	4							2
32	1	129508-22900	PISTON ASSY, 0.25 OS	4							3
34	2	129004-22950	RING SET, 0.25 OS	4							3

N:Old ←Yes/No→ New. Q:Old ←No/Yes→ New. R:Old ←Yes/Yes→ New. S:Old ←No/No→ New. W:Add. Z:Discontinued. F:Interchangeable by set. K:Q'ty Change

Copyright (C) YANMAR GLOBAL CS CO., LTD. All RightsReserved.

Fig.10. LUB. OIL SYSTEM

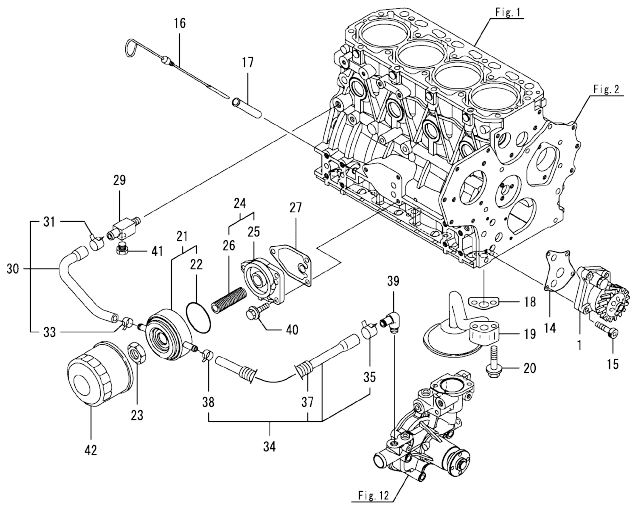

(A)=4TNV84T-ZMTR (D)=
(B)= (E)=
(C)= (F)=

No.	Lev.	Parts No.	Description	Q'ty (A)	(B)	(C)	(D)	(E)	(F)	I	R
1	1	129418-32000	PUMP ASSY, OIL	1							
14	1	129150-32020	GASKET, PUMP	1							
15	1	26450-060252	BOLT, M6X 25	4							
16	1	129005-34802	DIPSTICK, OIL	1							
17	1	121520-34810	GUIDE, DIPSTICK	1							
18	1	129150-35042	GASKET	1							
19	1	129150-35091	PIPE ASSY, OIL INLET	1							
20	1	26106-080352	BOLT, M8X 35 PLATED	2							
21	1	129508-33010	COOLER ASSY, OIL	1							
22	2	129508-33050	O-RING	1							
23	1	129417-33111	NUT, OIL COOLER	1							
24	1	129006-35100	BRACKET ASSY, FILTER	1							
25	2	119802-35110	BRACKET, FILTER	1							
26	2	129417-35150	STUD, L=67	1							
27	1	129150-35111	GASKET	1							
29	1	129006-44480	JOINT	1							
30	1	129508-49030	PIPE ASSY, WATER	1							
31	2	171008-03990	CLIP, HOSE 18.5	1							
33	2	23080-015000	CLAMP, 15	1							
34	1	129508-49040	PIPE ASSY, WATER	1							
35	2	171008-03990	CLIP, HOSE 18.5	1							
37	2	119940-59130	TUBE, CORRUGATED	1							
38	2	23080-015000	CLAMP, 15	1							
39	1	129103-49301	ELBOW, PT1/4	1							
40	1	26106-080202	BOLT, M8X 20 PLATED	3							
41	1	171056-49120	PLUG, DRAIN	1							
42	1	129150-35153	FILTER	1							1

Remarks
(1)Spare parts.

N:Old $\xleftarrow[\text{No}]{\text{Yes}}$ New. Q:Old $\xleftarrow[\text{Yes}]{\text{No}}$ New. R:Old $\xleftarrow[\text{Yes}]{\text{Yes}}$ New. S:Old $\xleftarrow[\text{No}]{\text{No}}$ New. W:Add. Z:Discontinued. F:Interchangeable by set. K:Q'ty Change

Copyright (C) YANMAR GLOBAL CS CO., LTD. All RightsReserved.

Fig.11. LUB. OIL LINE

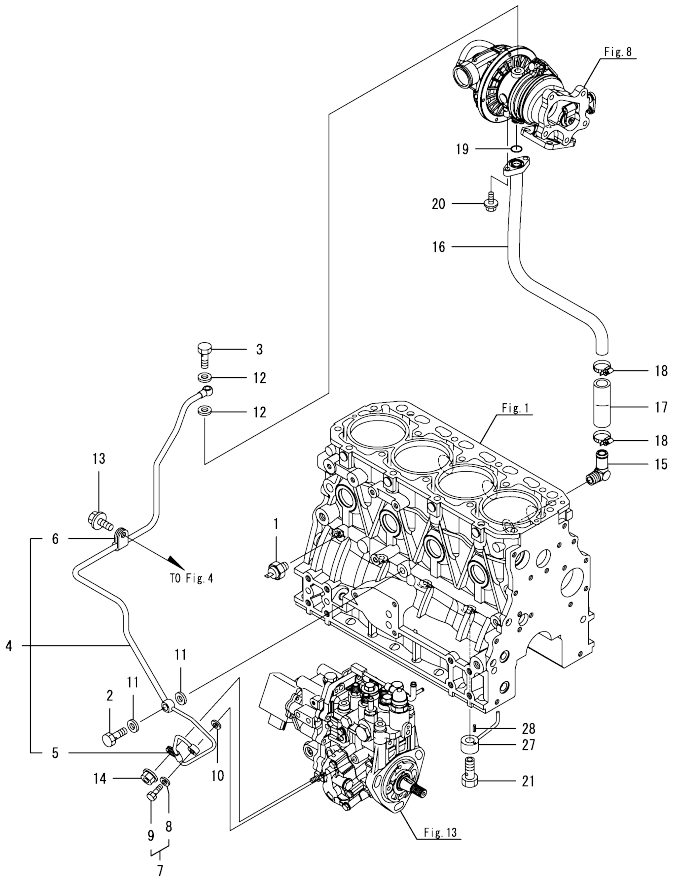

(A)=4TNV84T-ZMTR (D)=
(B)= (E)=
(C)= (F)=

No.	Lev.	Parts No.	Description	Q'ty (A)	(B)	(C)	(D)	(E)	(F)	I	R
1	1	119761-39450	SWITCH, 0.5KG	1							
2	1	124160-39140	BOLT, PIPE JOINT M10	1							
3	1	121252-39150	BOLT, JOINT M10X1.5	1							
4	1	129508-39450	PIPE ASSY, OIL	1							
5	2	119802-39500	RETAINER, PIPE	1							
6	2	124223-39900	RETAINER	1							
7	1	129005-59830	BOLT ASSY, JOINT M8	1							
8	2	22190-080002	WASHER, SEAL 6	1							
9	2	23857-030000	BOLT, JOINT 3	1							
10	1	22190-080002	WASHER, SEAL 6	1							
11	1	22190-100002	WASHER, SEAL 10	2							
12	1	23414-100000	GASKET, 10X1.0	2							
13	1	26106-080122	BOLT, M8X 12 PLATED	1							
14	1	26366-060002	NUT, M6	1							
15	1	124070-13300	ELBOW, PT3/8	1							
16	1	129508-39600	PIPE, OIL	1							
17	1	123901-39820	HOSE	1							
18	1	23000-025000	CLAMP, 25	2							
19	1	24316-000160	O-RING, 4DP16.0	1							
20	1	26106-060162	BOLT, M6X 16 PLATED	2							
21	1	129792-39410	VALVE ASSY, CHECK	4							
27	1	129553-39650	NOZZLE	4							
28	1	22351-030010	PIN, SPRING 3.0X10	4							

N:Old ←Yes/No→ New. Q:Old ←No/Yes→ New. R:Old ←Yes/Yes→ New. S:Old ←No/No→ New. W:Add. Z:Discontinued. F:Interchangeable by set. K:Q'ty Change

Copyright (C) YANMAR GLOBAL CS CO., LTD. All RightsReserved.

Fig.12. COOLING WATER SYSTEM

(A)=4TNV84T-ZMTR
(B)=
(C)=
(D)=
(E)=
(F)=

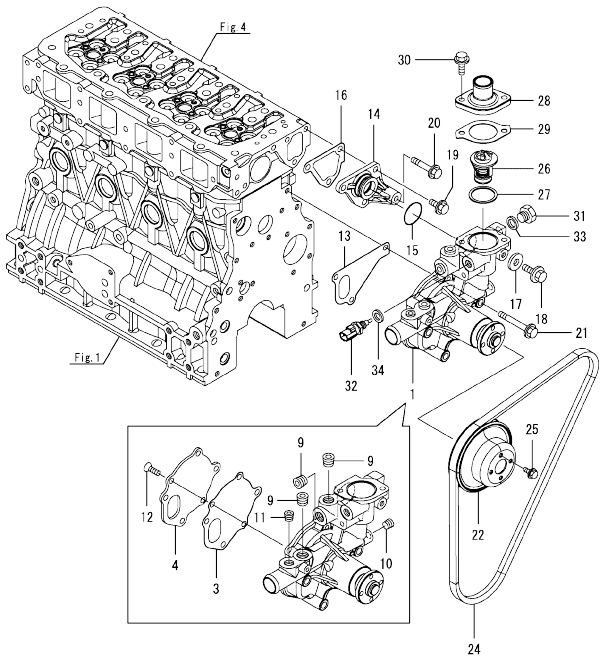

No.	Lev.	Parts No.	Description	Q'ty (A)	(B)	(C)	(D)	(E)	(F)	I	R
1	1	129237-42000	PUMP ASSY, CW	1							
3	2	129100-42051	GASKET, WATER PUMP	1							
4	2	129100-42121	PLATE	1							
9	2	129916-49740	PLUG, R03	3							
10	2	23876-010000	PLUG, R01	1							
11	2	23876-020000	PLUG, R02	1							
12	2	26577-060142	SCREW M 6X 14	3							
13	1	129486-42021	GASKET, WATER PUMP	1							
14	1	129004-42040	JOINT	1							
15	1	129486-42140	O-RING, G30	1							
16	1	124395-49840	GASKET	1							
17	1	23414-080000	GASKET, 8X1.0	1							
18	1	26106-080122	BOLT, M8X 12 PLATED	1							
19	1	26106-080162	BOLT, M8X 16 PLATED	3							
20	1	26106-080452	BOLT, M8X 45 PLATED	1							
21	1	26106-080602	BOLT, M8X 60 PLATED	3							
22	1	129403-42380	V-PULLEY, D=110	1							
24	1	25152-003900	V-BELT, A39	1							
24-1	1	129044-42290	V-BELT, A38.5	1						F	1
	(A=EZZZZZ)										
25	1	26106-060122	BOLT, M6X 12 PLATED	4							
26	1	129155-49801	THERMOSTAT, 71	1							
27	1	129150-49811	GASKET, THERMOSTAT	1							
28	1	129350-49530	COVER, THERMOSTAT	1							
29	1	129795-49551	GASKET	1							
30	1	26106-080222	BOLT, M8X 22 PLATED	2							
31	1	121450-42450	PLUG, M16	1							
32	1	129927-44900	SENSOR	1							
33	1	124465-44950	GASKET, 16	1							
34	1	22190-120002	WASHER, SEAL 12	1							

Remarks
(1) Fig.17, No.6-1 and this are the exchanges simultaneously.

N:Old ←Yes/No→ New. Q:Old ←No/Yes→ New. R:Old ←Yes/Yes→ New. S:Old ←No/No→ New. W:Add. Z:Discontinued. F:Interchangeable by set. K:Q'ty Change

Copyright (C) YANMAR GLOBAL CS CO., LTD. All RightsReserved.

Fig.13. FUEL INJECTION PUMP

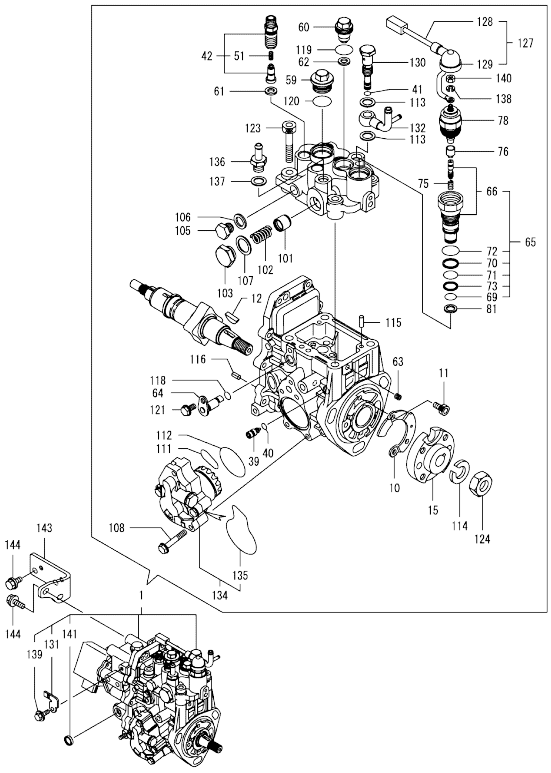

Remarks
(1)Governor(Fig.14)is incorporated in this Fuel Injection Pump (Ref.1).
(1)Eco Pump
Make sure to update the engines ECU information when replacing the Eco Pump.
Failing to do so will result in engine malfunction.

(A)=4TNV84T-ZMTR (D)=
(B)= (E)=
(C)= (F)=

No.	Lev.	Parts No.	Description	Q'ty (A)	(B)	(C)	(D)	(E)	(F)	I	R
1	1	729538-51340	FIE ASSY	1							1
10	2	129008-51900	COVER, PUMP	1							
11	2	129008-51920	BOLT, SOCKET M6X10	2							
12	2	119802-51090	FEATHER KEY, 4X16	1							
15	2	158552-51151	FLANGE	1							
39	2	158600-51270	STOPPER, TAPPET	1							
40	2	158563-51281	O-RING, 4D S6	1							
41	2	158563-51281	O-RING, 4D S6	1							
42	2	129509-51390	VALVE ASSY, DELIVERY	4							
51	3	158563-51330	SPRING, DELIVERY	4							
59	2	158601-51550	PLUG, M22	1							
60	2	119802-51560	PLUG, M14	1							
61	2	158552-51571	GASKET, PLUG	4							
62	2	158552-51571	GASKET, PLUG	1							
63	2	158557-51570	PLUG, RACK	1							
64	2	158552-51580	LIFTER, LINK	1							
65	2	129657-51590	TIMER ASSY	1							
66	3	129657-51600	TIMER ASSY	1							
69	3	158553-51670	O-RING	1							
70	3	119802-51680	RING, BACKUP	1							
71	3	119802-51690	O-RING	1							
72	3	24356-190200	O-RING, 4D19020	1							
73	3	24372-000150	RING, BACK UP T2P15	1							
75	2	119852-51630	SPRING, TIMER	1							
76	2	119852-51640	CAP, TIMER	1							
78	2	119852-51650	VALVE ASSY, SOLENOID	1							
81	2	158553-51680	GASKET, TIMER	1							
101	2	158601-51770	PISTON, ACCUMLATOR	1							
102	2	158552-51781	SPRING, ACCUMULATOR	1							
103	2	158601-51790	PLUG	1							
105	2	158553-51930	PLUG, M12	1							
106	2	22190-120002	WASHER, SEAL 12	1							
107	2	22190-180002	WASHER, SEAL 18	1							
108	2	158553-51770	BOLT	4							
111	2	158552-52311	O-RING	1							
112	2	158552-52400	O-RING, 4E S42	1							
113	2	22190-120002	WASHER, SEAL 12	2							
114	2	22217-140000	WASHER, SPRING 14	1							
115	2	22312-050140	PIN, PARALLEL M5X14	2							
116	2	22351-050010	PIN, SPRING 5.0X10	2							
118	2	24311-000070	O-RING, 1AP7.0	1							
119	2	24356-190180	O-RING, 4D19018	1							
120	2	24356-190200	O-RING, 4D19020	1							
121	2	26106-060102	BOLT, M6X 10 PLATED	1							
123	2	26450-080452	BOLT, M8X 45	4							
124	2	26776-140002	NUT, LOCK M14	1							
127	2	129927-51650	HARNESS ASSY, WIRE	1							
128	3	129927-51660	HARNESS	1							
129	3	129263-77941	CAP, RUBBER	1							
130	2	158601-51650	JOINT, OVER FLOW	1							
131	2	129927-51670	BRACKET	1							

N:Old ←Yes/No→ New. Q:Old ←No/Yes→ New. R:Old ←Yes/Yes→ New. S:Old ←No/No→ New. W:Add. Z:Discontinued. F:Interchangeable by set. K:Q'ty Change

++ CONTINUE ++

Copyright (C) YANMAR GLOBAL CS CO., LTD. All RightsReserved.

Fig.13. FUEL INJECTION PUMP

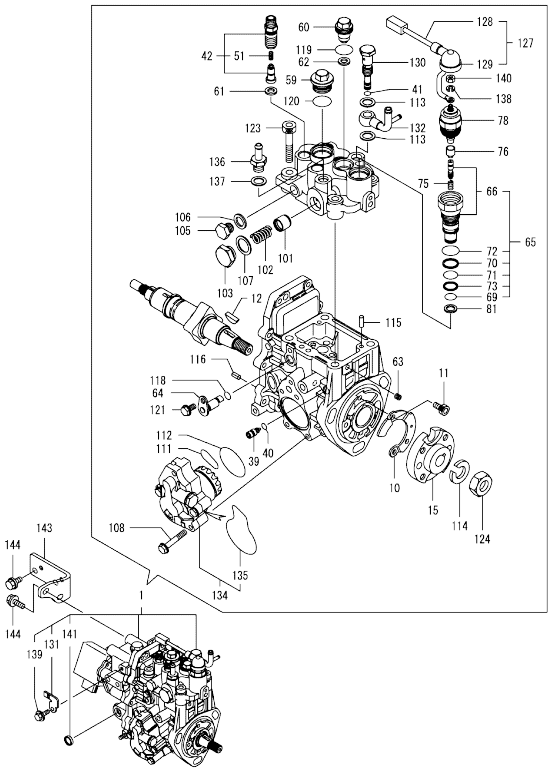

Remarks
(1)Governor(Fig.14)is incorporated in this Fuel Injection Pump (Ref.1).
(1)Eco Pump
Make sure to update the engines ECU information when replacing the Eco Pump.
Failing to do so will result in engine malfunction.

(A)=4TNV84T-ZMTR (D)=
(B)= (E)=
(C)= (F)=

No.	Lev.	Parts No.	Description	Q'ty (A)	(B)	(C)	(D)	(E)	(F)	I	R
132	2	158552-51670	JOINT, OVER FLOW	1							
134	2	158552-52100	PUMP ASSY, FUEL FEED	1							
135	3	158552-52500	O-RING	1							
136	2	119934-59910	JOINT, PIPE	1							
137	2	22190-120002	WASHER, SEAL 12	1							
138	2	22217-050000	WASHER, SPRING 5	1							
139	2	26106-060142	BOLT, M6X 14 PLATED	1							
140	2	26716-050002	NUT, M5	1							
141	2	27241-160000	PLUG, 16	1							
143	1	129263-51251	RETAINER, PUMP	1							
144	1	26106-080162	BOLT, M8X 16 PLATED	4							

N:Old ←Yes/No→ New. Q:Old ←No/Yes→ New. R:Old ←Yes/Yes→ New. S:Old ←No/No→ New. W:Add. Z:Discontinued. F:Interchangeable by set. K:Q'ty Change

Copyright (C) YANMAR GLOBAL CS CO., LTD. All RightsReserved.

Fig.14. GOVERNOR

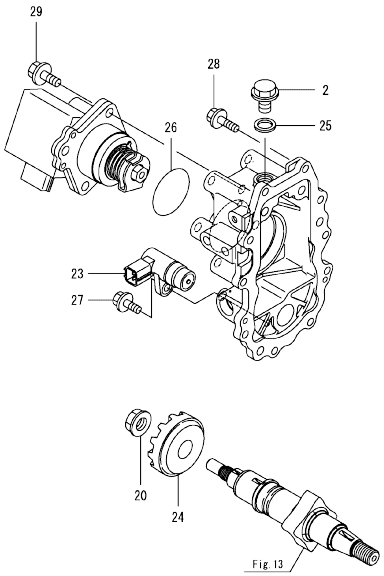

Remarks
*This figure(Governor)is incorporated
in the Fuel Injection Pump (Fig.13).

(A)=4TNV84T-ZMTR (D)=
(B)= (E)=
(C)= (F)=

No.	Lev.	Parts No.	Description	Q'ty (A)	(B)	(C)	(D)	(E)	(F)	I	R
2	2	158553-51930	PLUG, M12	1							
20	2	129008-61301	NUT	1							
23	2	158557-61720	SENSOR	1							
24	2	158553-61780	GEAR, SENSOR	1							
25	2	22190-120002	WASHER, SEAL 12	1							
26	2	24341-000480	O-RING, 1AS48.0	1							
27	2	26106-060162	BOLT, M6X 16 PLATED	1							
28	2	26106-060202	BOLT, M6X 20 PLATED	10							
29	2	26106-080252	BOLT, M8X 25 PLATED	3							

N:Old ←Yes/No→ New. Q:Old ←No/Yes→ New. R:Old ←Yes/Yes→ New. S:Old ←No/No→ New. W:Add. Z:Discontinued. F:Interchangeable by set. K:Q'ty Change

Copyright (C) YANMAR GLOBAL CS CO., LTD. All RightsReserved.

Fig.15. FUEL INJECTION VALVE

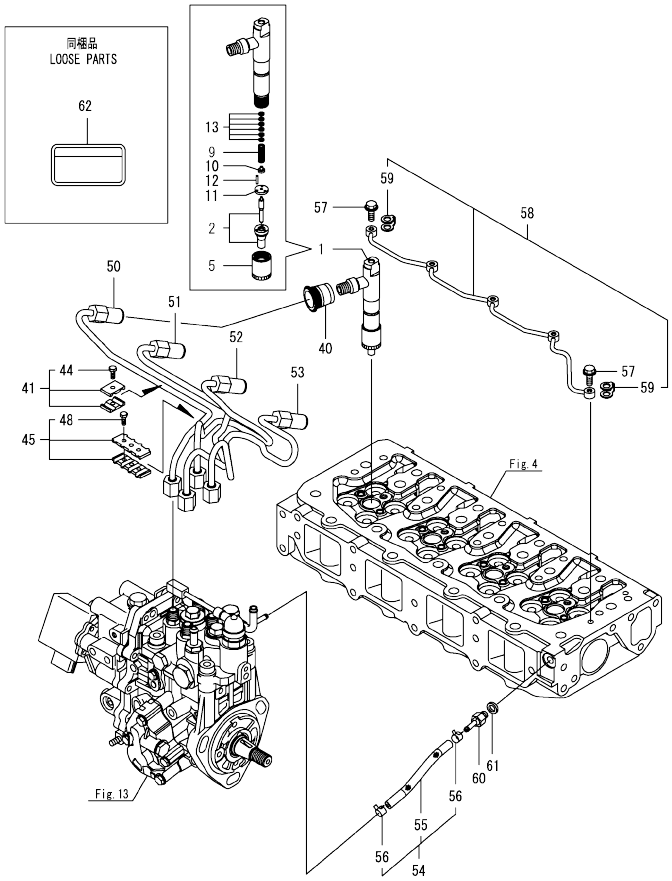

(A)=4TNV84T-ZMTR (D)=
(B)= (E)=
(C)= (F)=

No.	Lev.	Parts No.	Description	Q'ty (A)	(B)	(C)	(D)	(E)	(F)	I	R
1	1	729530-53100	VALVE ASSY,INJECTION	4							
2	2	129937-53000	VALVE ASSY,INJECTION	4							
5	2	114250-53080	NUT, NOZZLE D16.95	4							
9	2	114250-53120	SPRING, NOZZLE	4							
10	2	114250-53130	SEAT, SPRING	4							
11	2	114250-53140	PLATE	4							
12	2	114250-53210	PIN	8							
13	2	119803-53400	SHIM SET	4							
40	1	123907-11601	SEAL	4							
41	1	119305-59120	RETAINER, PIPE	2							
44	2	129150-59131	BOLT, M4X14	2							
45	1	129550-59120	RETAINER, PIPE	1							
48	2	129150-59131	BOLT, M4X14	2							
50	1	129508-59910	PIPE ASSY, INJECTION	1							
51	1	129508-59920	PIPE ASSY, INJECTION	1							
52	1	129508-59930	PIPE ASSY, INJECTION	1							
53	1	129508-59940	PIPE ASSY, INJECTION	1							
54	1	119946-59100	PIPE ASSY, FUEL	1							
55	2	119946-59600	PIPE, FUEL	1							
56	2	124060-77680	CLIP, HOSE 10	2							
57	1	123907-59540	BOLT, PIPE JOINT M6	5							
58	1	129508-59550	PIPE ASSY, RETURN	1							
59	2	123907-59550	GASKET	5							
60	1	123907-59560	JOINT	1							
61	1	22190-080002	WASHER, SEAL 6	1							
62	1	114110-07761	LABEL, FUEL OIL CAUT	1							

N:Old ←Yes/No→ New. Q:Old ←No/Yes→ New, R:Old ←Yes/Yes→ New, S:Old ←No/No→ New, W:Add, Z:Discontinued. F:Interchangeable by set. K:Q'ty Change

Copyright (C) YANMAR GLOBAL CS CO., LTD. All RightsReserved.

Fig.16. STARTING MOTOR

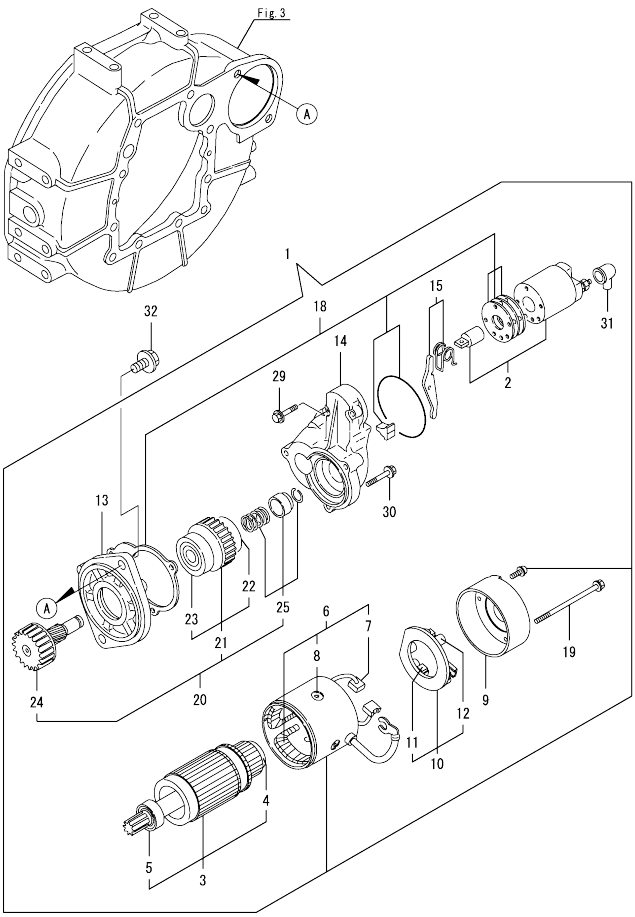

(A)=4TNV84T-ZMTR
(B)=
(C)=
(D)=
(E)=
(F)=

No.	Lev.	Parts No.	Description	Q'ty (A)	(B)	(C)	(D)	(E)	(F)	I	R
1	1	129136-77011	STARTER	1							
2	2	129136-77310	SWITCH ASSY	1							
3	2	129900-77400	ARMATURE ASSY	1							
4	3	X2130350900	BEARING, BALL	1							
5	3	X2114255110	BEARING, BALL	1							
6	2	129900-77440	COIL ASSY, FIELD	1							
7	3	129900-77450	BRUSH	2							
8	3	171008-77450	SCREW	4							
9	2	129900-77460	COVER	1							
10	2	129900-77480	HOLDER ASSY, BRUSH	1							
11	3	129900-77450	BRUSH	2							
12	3	129400-77490	SPRING	4							
13	2	171008-77510	CASE, GEAR	1							
14	2	129136-77520	HOUSING	1							
15	2	171008-77540	LEVER SET	1							
18	2	129400-77571	COVER ASSY, DUST	1							
19	2	129900-77640	BOLT, THROUGH	2							
20	2	171008-77650	PINION ASSY	1							
21	3	X2114555500	CLUTCH ASSY	1							
22	4	X2114955020	BEARING, BALL	1							
23	4	X2240410100	BEARING, BALL	1							
24	3	171008-77660	SHAFT	1							
25	3	171008-77670	STOPPER SET	1							
29	2	26106-060322	BOLT, M6X 32 PLATED	2							
30	2	26106-060402	BOLT, M6X 40 PLATED	3							
31	2	171008-77750	COVER	1							
32	1	26106-120252	BOLT, M12X 25 PLATED	2							

N:Old ←Yes/No→ New. Q:Old ←No/Yes→ New. R:Old ←Yes/Yes→ New. S:Old ←No/No→ New. W:Add. Z:Discontinued. F:Interchangeable by set. K:Q'ty Change

Copyright (C) YANMAR GLOBAL CS CO., LTD. All RightsReserved.

Fig.17. GENERATOR

(A)=4TNV84T-ZMTR
(B)=
(C)=
(D)=
(E)=
(F)=

No.	Lev.	Parts No.	Description	Q'ty (A)	(B)	(C)	(D)	(E)	(F)	I	R
1	1	129908-77200	ALTERNATOR	1							
1A	2	129908-77710	BEARING, BALL FR	1							
1B	2	129908-77720	ROTOR	1							
1C	2	129908-77730	BEARING, BALL RR	1							
1D	2	129908-77740	RECTIFIER	1							
1E	2	129908-77750	REGULATOR	1							
1F	2	129908-77760	STATOR	1							
1G	2	129908-77770	PROTECTOR	1							
2	1	129908-77220	BOLT, STOPPER M10	1							
3	1	129908-77360	PIECE, DISTANCE	1							
4	1	26306-100002	NUT, M10	1							
5	1	119940-77270	SPACER	1							
6	1	129631-77310	ADJUSTER, BELT	1							
6-1	1	129631-77311	ADJUSTER, BELT	1						F	1
	(A=EZZZZZ)										
7	1	129972-77341	BOLT, ADJUST L=50	1							
8	1	26106-080452	BOLT, M8X 45 PLATED	1							
9	1	198461-52950	RELAY, CA TYPE C	2							
10	1	129927-77690	WASHER, ECU	3							
11	1	129927-77920	RELAY, ISO 70A	2							

Remarks
(1) Fig.12, No.24-1 and this are the exchanges simultaneously.

N:Old ←Yes/No→ New. Q:Old ←No/Yes→ New. R:Old ←Yes/Yes→ New. S:Old ←No/No→ New. W:Add. Z:Discontinued. F:Interchangeable by set. K:Q'ty Change

Copyright (C) YANMAR GLOBAL CS CO., LTD. All RightsReserved.

Fig.18. ELECTRONIC CONTROL UNIT (ECU)

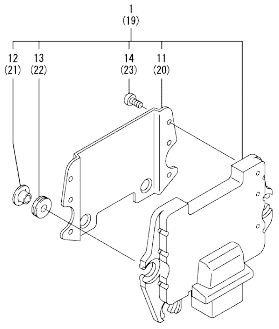

Remarks
(1) Eco ECU
This part cannot be ordered.
Replace the part using a Service ECU with the proper engine information installed.
(2) Service ECU
If the proper information is not installed, the engine will not operate.
To install proper information, go to an authorized Distributor.

(A)=4TNV84T-ZMTR
(B)=
(C)=
(D)=
(E)=
(F)=

No.	Lev.	Parts No.	Description	Q'ty (A)	(B)	(C)	(D)	(E)	(F)	I	R
1	1	129538-75030	ECU ASSY	1							1
11	2	129927-77600	SHIELD	1							
12	2	129927-77680	COLLAR	3							
13	2	119578-91351	ABSORBER	3							
14	2	22877-500080	SCREW, 5X 8	6							
19	1	129927-75900	CONTROLLER ASSY, EUC	1							2
20	2	129927-77600	SHIELD	1							
21	2	129927-77680	COLLAR	3							
22	2	119578-91351	ABSORBER	3							
23	2	22877-500080	SCREW, 5X 8	6							

N:Old ◄Yes/No► New. Q:Old ◄No/Yes► New. R:Old ◄Yes/Yes► New. S:Old ◄No/No► New. W:Add. Z:Discontinued. F:Interchangeable by set. K:Q'ty Change

Copyright (C) YANMAR GLOBAL CS CO., LTD. All RightsReserved.

Fig.19. GASKET SET

(A)=4TNV84T-ZMTR
(B)=
(C)=
(D)=
(E)=
(F)=

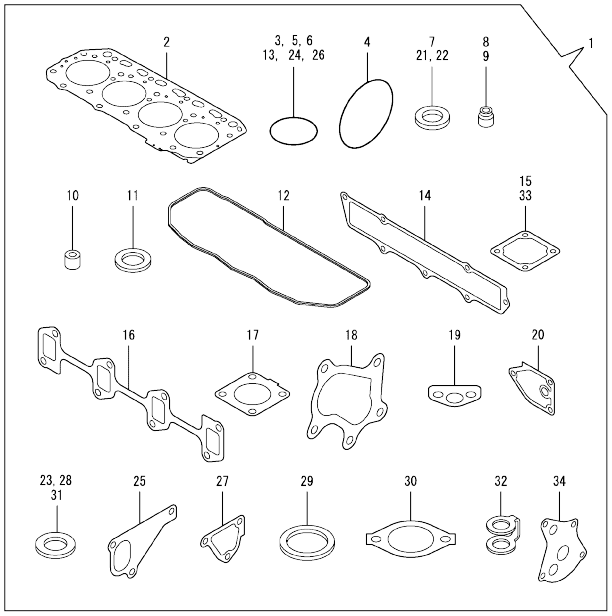

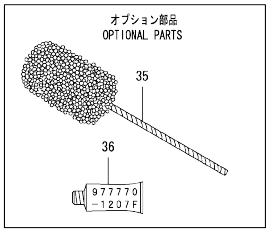

No.	Lev.	Parts No.	Description	Q'ty (A)	(B)	(C)	(D)	(E)	(F)	I	R
1	1	729508-92850	GASKET SET	1							1
2	2	129508-01330	GASKET, HEAD	1							
3	2	119609-32040	O-RING, P16	2							
4	2	121850-51960	O-RING	1							
5	2	24311-000320	O-RING, 1AP32.0	2							
6	2	24341-000240	O-RING, 1AS24.0	1							
7	2	22190-220002	WASHER, SEAL 22	1							
8	2	119717-11340	SEAL, VALVE STEM	8							
9	2	119717-11350	SEAL, VALVE STEM	8							
10	2	119802-11870	PROTECTOR, NOZZLE	4							
11	2	119625-11880	SEAT, NOZZLE	4							
12	2	129508-11310	GASKET, BONNET	1							
13	2	24311-000120	O-RING, 1AP12.0	7							
14	2	129508-12110	GASKET, MANIFOLD	1							
15	2	129150-77511	GASKET	1							
16	2	129550-13110	GASKET	1							
17	2	129508-18080	GASKET	1							
18	2	129508-18090	GASKET	1							
19	2	129150-35042	GASKET	1							
20	2	129150-35111	GASKET	1							
21	2	22190-080002	WASHER, SEAL 6	7							
22	2	22190-100002	WASHER, SEAL 10	2							
23	2	23414-100000	GASKET, 10X1.0	2							
24	2	24316-000160	O-RING, 4DP16.0	1							
25	2	129486-42021	GASKET, WATER PUMP	1							
26	2	129486-42140	O-RING, G30	1							
27	2	124395-49840	GASKET	1							
28	2	23414-080000	GASKET, 8X1.0	1							
29	2	129150-49811	GASKET, THERMOSTAT	1							
30	2	129795-49551	GASKET	1							
31	2	124465-44950	GASKET, 16	2							
32	2	123907-59550	GASKET	5							
33	2	129100-77510	GASKET	1							
34	2	129150-32020	GASKET, PUMP	1							
35	1	129400-92420	HONE	1							1
36	1	977770-1207F	GASKET.LIQUID	1							1

Remarks
(1) Optional part.

N:Old ←Yes/No→ New. Q:Old ←No/Yes→ New. R:Old ←Yes/Yes→ New. S:Old ←No/No→ New. W:Add. Z:Discontinued. F:Interchangeable by set. K:Q'ty Change

Copyright (C) YANMAR GLOBAL CS CO., LTD. All RightsReserved.

Parts No. Index

Parts No.	Fig. No.	Ref. No.
114110-07761	15	62
114250-53080	15	5
114250-53120	15	9
114250-53130	15	10
114250-53140	15	11
114250-53210	15	12
119131-18320	6	6
119305-59120	15	41
119578-91351	18	13
		22
119609-32040	2	9
	19	3
119620-01750	3	3
119625-11880	4	39
	19	11
119640-01640	3	7
119640-61400	4	60
119717-11190	4	30
119717-11340	4	31
	19	8
119717-11350	4	32
	19	9
119717-11800	4	76
119761-39450	11	1
119802-01561	2	5
119802-03070	4	49
119802-11870	4	38
	19	10
119802-13650	6	3
119802-13670	6	4
119802-13820	6	5
119802-21650	9	8
119802-25071	7	16
119802-25101	7	10
119802-25901	7	15
119802-35110	10	25
119802-39500	11	5
119802-51090	13	12
119802-51560	13	60
119802-51680	13	70
119802-51690	13	71
119803-01520	2	4
119803-21200	9	4
119803-25050	7	9
119803-53400	15	13
119852-51630	13	75
119852-51640	13	76
119852-51650	13	78
119865-21600	9	14
119934-01800	2	3

Parts No.	Fig. No.	Ref. No.
119934-59910	13	136
119940-59130	10	37
119940-77270	17	5
119946-59100	15	54
119946-59600	15	55
121023-01551	2	19
121111-21501	9	11
121252-39150	11	3
121450-42450	12	31
121520-34810	10	17
121550-23200	9	26
121850-21680	9	10
121850-51960	2	10
	19	4
123901-39820	11	17
123907-03100	4	52
123907-03110	4	53
123907-03120	4	54
123907-03140	4	55
123907-11550	4	17
123907-11601	15	40
123907-11830	4	36
123907-59540	15	57
123907-59550	15	59
	19	32
123907-59560	15	60
124060-01050	1	4
124060-77680	15	56
124070-13300	11	15
124160-01751	2	6
	4	46
124160-01910	1	6
		7
124160-11360	4	64
124160-39140	11	2
124223-39900	11	6
124240-01871	2	7
124395-49840	12	16
	19	27
124465-44950	12	33
	19	31
129001-01250	1	5
129001-02931	1	29
129001-11340	4	58
129004-22500	9	17
129004-22950	9	34
129004-42040	12	14
129005-34802	10	16
129005-59830	11	7
129006-35100	10	24

Parts No.	Fig. No.	Ref. No.
129006-44480	10	29
129008-51900	13	10
129008-51920	13	11
129008-61301	14	20
129009-11340	4	59
129044-42290	12	24 -1
129100-01580	3	1
		15
	9	2
129100-01640	3	16
129100-23910	9	29
129100-42051	12	3
129100-42121	12	4
129100-77510	19	33
129103-49301	10	39
129120-77502	5	8
129136-77011	16	1
129136-77310	16	2
129136-77520	16	14
129150-01200	1	27
129150-02020	1	9
129150-02450	7	4
129150-02871	1	32
129150-02931	1	24
129150-02941	1	35
129150-03070	4	50
129150-11230	4	8
		12
129150-11750	4	10
		14
		35
129150-14101	7	6
129150-14200	7	1
129150-14400	7	2
129150-23601	9	27
129150-23611	9	30
129150-25301	7	14
129150-32020	10	14
	19	34
129150-35042	10	18
	19	19
129150-35091	10	19
129150-35111	10	27
	19	20
129150-35153	10	42
129150-49811	12	27
	19	29
129150-59131	15	44
		48
129150-77511	5	9

Parts No.	Fig. No.	Ref. No.
129150-77511	19	15
129155-49801	12	26
129202-22300	9	21
129237-42000	12	1
129263-51251	13	143
129263-77941	13	129
129350-49530	12	28
129400-01730	3	10
129400-77490	16	12
129400-77571	16	18
129400-92420	19	35
129403-42380	12	22
129410-03990	4	70
129417-33111	10	23
129417-35150	10	26
129418-18320	8	3
129418-32000	10	1
129486-01670	3	19
129486-07901	4	73
129486-42021	12	13
	19	25
129486-42140	12	15
	19	26
129508-01330	1	28
	19	2
129508-03010	4	48
129508-11100	4	26
129508-11110	4	27
129508-11130	4	28
129508-11180	4	29
129508-11241	4	1
129508-11250	4	2
129508-11260	4	4
129508-11270	4	5
129508-11280	4	6
129508-11310	4	57
	19	12
129508-11650	4	7
129508-11660	4	11
129508-11820	4	37
129508-11900	4	40
129508-11920	4	15
129508-12070	5	1
129508-12110	5	2
	19	14
129508-12121	5	3
129508-14580	7	3
129508-18010	8	1
129508-18080	8	2
	19	17

Parts No. Index

Parts No.	Fig. No.	Ref. No.
129508-18090	6	9
	19	18
129508-22080	9	15
129508-22900	9	32
129508-33010	10	21
129508-33050	10	22
129508-39450	11	4
129508-39600	11	16
129508-49030	10	30
129508-49040	10	34
129508-59550	15	58
129508-59910	15	50
129508-59920	15	51
129508-59930	15	52
129508-59940	15	53
129509-03050	4	67
129509-03080	4	68
129509-03090	4	69
129509-11700	4	18
129509-12070	4	71
129509-21000	9	1
129509-51390	13	42
129533-13100	6	1
129533-13500	6	7
129538-13540	6	8
129538-75030	18	1
129550-13110	6	2
	19	16
129550-59120	15	45
129553-39650	11	27
129584-11350	4	47
129612-01600	3	2
129631-77310	17	6
129631-77311	17	6 -1
129657-51590	13	65
129657-51600	13	66
129672-11510	4	33
129792-39410	11	21
129795-01780	3	18
129795-01950	2	8
129795-02412	1	12
129795-21661	9	9
129795-49551	12	29
	19	30
129900-07900	4	74
129900-77400	16	3
129900-77440	16	6
129900-77450	16	7
		11
129900-77460	16	9

Parts No.	Fig. No.	Ref. No.
129900-77480	16	10
129900-77640	16	19
129907-03070	4	51
129907-11950	4	41
129908-77200	17	1
129908-77220	17	2
129908-77360	17	3
129908-77710	17	1 A
129908-77720	17	1 B
129908-77730	17	1 C
129908-77740	17	1 D
129908-77750	17	1 E
129908-77760	17	1 F
129908-77770	17	1 G
129916-49740	12	9
129927-44900	12	32
129927-51650	13	127
129927-51660	13	128
129927-51670	13	131
129927-75900	18	19
129927-77600	18	11
		20
129927-77680	18	12
		21
129927-77690	17	10
129927-77920	17	11
129937-53000	15	2
129972-77341	17	7
158552-51151	13	15
158552-51571	13	61
		62
158552-51580	13	64
158552-51670	13	132
158552-51781	13	102
158552-52100	13	134
158552-52311	13	111
158552-52400	13	112
158552-52500	13	135
158553-51670	13	69
158553-51680	13	81
158553-51770	13	108
158553-51930	13	105
	14	2
158553-61780	14	24
158557-51570	13	63
158557-61720	14	23
158563-51281	13	40
		41
158563-51330	13	51
158600-51270	13	39

Parts No.	Fig. No.	Ref. No.
158601-51550	13	59
158601-51650	13	130
158601-51770	13	101
158601-51790	13	103
171008-03990	10	31
		35
171008-77450	16	8
171008-77510	16	13
171008-77540	16	15
171008-77650	16	20
171008-77660	16	24
171008-77670	16	25
171008-77750	16	31
171051-01921	1	8
171056-49120	10	41
171420-21580	9	12
198461-52950	17	9
22190-080002	2	11
	11	8
		10
	15	61
	19	21
22190-100002	11	11
	19	22
22190-120002	12	34
	13	106
		113
		137
	14	25
22190-180002	13	107
22190-220002	3	9
	19	7
22217-050000	13	138
22217-140000	13	114
22252-000260	9	22
22312-050140	13	115
22351-030010	9	7
	11	28
22351-050010	13	116
22351-060012	4	42
22512-070140	7	7
	9	5
22857-500100	4	61
		62
		63
22877-500080	18	14
		23
23000-025000	11	18
23000-048000	5	4
23000-060000	4	72

Parts No.	Fig. No.	Ref. No.
23000-060000	5	5
23080-015000	10	33
		38
23414-080000	12	17
	19	28
23414-100000	11	12
	19	23
23857-030000	11	9
23876-010000	12	10
23876-020000	4	24
	12	11
24311-000070	13	118
24311-000120	4	43
		65
	19	13
24311-000320	2	12
	4	66
	19	5
24316-000160	11	19
	19	24
24341-000240	2	20
	19	6
24341-000480	14	26
24356-190180	13	119
24356-190200	13	72
		120
24372-000150	13	73
25152-003900	12	24
26106-060102	13	121
26106-060122	12	25
26106-060142	13	139
26106-060162	2	21
	11	20
	14	27
26106-060202	14	28
26106-060322	16	29
26106-060402	16	30
26106-080122	11	13
	12	18
26106-080142	6	10
	7	8
26106-080162	2	13
		14
	3	11
	4	75
	12	19
	13	144
26106-080202	5	6
	6	11
	10	40

Parts No. Index

Parts No.	Fig. No.	Ref. No.
26106-080222	12	30
26106-080252	3	12
	4	44
	14	29
26106-080302	2	15
26106-080352	3	20
	5	10
	10	20
26106-080402	7	13
26106-080452	3	13
	12	20
	17	8
26106-080502	3	14
	4	45
26106-080552	2	16
26106-080602	12	21
26106-080802	5	7
26106-080852	2	17
26106-120252	16	32
26206-100252	3	4
26206-100302	3	5
26226-080352	4	16
26306-080002	2	18
	6	12
	8	4
26306-100002	17	4
26366-060002	11	14
26450-060252	10	15
26450-080452	13	123
26577-060142	12	12
26716-050002	13	140
26776-140002	13	124
27241-120000	1	13
27241-160000	13	141
27241-300000	1	14
27241-400000	4	25
729402-01540	3	6
729402-23100	9	23
729508-92850	19	1
729509-01560	1	1
729530-53100	15	1
729538-51340	13	1
729630-01500	2	1
977770-1207F	19	36
X2114255110	16	5
X2114555500	16	21
X2114955020	16	22
X2130350900	16	4
X2240410100	16	23

Parts No.	Fig. No.	Ref. No.

Parts No.	Fig. No.	Ref. No.

Parts No.	Fig. No.	Ref. No.