YANMAR

PARTS CATALOG

0CW10-M56800EN

Last update Oct., 2019

PREFACE

1. This parts catalog is the 1st edition of 3TNV82A-BDWM for WEIDEMANN.

Pub.No. : 0CW10-G56800
Published : September, 2009

2. Model name

Engine model	Vehicle	Vehicle made by
3TNV82A-BDWM	TELESCOPIC HANDLER	WEIDEMANN

Directions for the Parts Catalog.

1.The parts stipulated in this Parts Catalog are not necessarily standard equipped parts.
2.Parts may change without prior notice.
3.The following is an example of the Parts Catalog format.

0CF10-G21601 29. FUEL INJECTION PUMP(W/BOOST)

(A)=4JH-DT
(B)=4JH-DTZ
(C)=4JH-DTZP
(D)=4JH-DTZA
(E)=4JH-DTZY
(F)=

① REF.	② LEV.	PARTS NO.	DESCRIPTION	Q'TY (A)	(B)	(C)	(D)	(E)	(F)	③ I	⑤ R
1	1	729595-51390	FUEL INJECTION PUMP	1	1	1	1	1			1
1-1	1	729595-51391	FUEL INJECTION PUMP	1	1	1	1	1		N	1
	(A=E00185)	(B=E00200)									
3	2	26022-060162	SCREW M 6X 16	9	9	9	9	9			
3-1 ④	2	26022-060162	SCREW M 6X 16	4	4	4	4	4		K	
	(A=E00156)	(B=E00156)	(C=E00156) (D=E00156)	(E=E00156)							
4	2	129470-51040	CAMSHAFT	1	1	1	1	1			
5	2	122710-51050	BEARING, ROLLER	2	2	2	2	2			
6	2	129470-51060	RETAINER	1	1	1	1	1			

Remarks
(1) BOOST COMPEMSATOR TYPE. OPTIONAL
PART, TO E00155,(4JH-DT, 4JH-DTZ

① Ref. No.

The Ref. No. listed may not be in accordance with the illustration Ref. No.

(Ex.) Illustration No. 1 List Ref No. 1 (Before change) → 1- 1 (After change)

For interchangeable symbols N, R and K, illustrations for new parts may be abbreviated.

② Lev. (Level)

Level indication
The numbers below indicate the level of relativity towards the main part.
1 ----- Main parts (Assembly parts)
2 ----- Sub component included in " 1 ".
3 ----- Sub component included in " 2 ".
Note) Parts that are not for sale are partially illustrated but not listed.

③ Interchangeability Mark

When a part change takes place, one of the following interchangeability symbols is indicated beside the part.

Symbol	Interchangeability	Contents note
N	Old ← Yes / No → New	New Part is interchangeable for Old Part but Old Part is not interchangeable for New Part.
Q	Old ← No / Yes → New	New Part is not interchangeable for Old Part but Old Part is interchangeable for New Part.
R	Old ← Yes / Yes → New	New/ Old Parts are both interchangeable.
S	Old ← No / No → New	New/ Old Parts are both not interchangeable.
W		Part newly added.
Z		Part discontinued.
F		Not interchangeable by a single part but interchangeable together with related parts.
K		Changes only for used parts quantities.

④ Effective Machine No.

When a part changes, the effective Machine No. will be indicated in the (A)-(F) column.

Product Symbol	Product No.	Product Symbol	Product No.
C	Clutch No. Compressor No.	F	Machine No. (Agricultural Equip.)
D	Drive No.	M	Machine No.
E	Engine No.		

Note 1) A date may follow the symbol. (Ex.) 1996.01
Note 2) " XXXXX " and " ZZZZZ " are for parts that could not be predicted or for engine models that could not be identified.
Note 3) (A=E00185) is the E (Engine Serial Number) for the column (A) model (in this case 4JH-DT) after the parts design change.

⑤ Remarks Mark

Figures or alphabets (symbols) are entered in the remarks column.
The comments (remarks) on parts that are indicated at the bottom of the illustration are the same symbols as those stated above.

Contents

0CW10-M56800

Fig. No.	Fig. Name	Fig. No.	Fig. Name
3TNV82A-BDWM			
1.	CYLINDER BLOCK		
2.	GEAR HOUSING		
3.	FLYWHEEL HOUSING & OIL SUMP		
4.	CYLINDER HEAD & BONNET		
5.	SUCTION MANIFOLD & AIR CLEANER		
6.	EXHAUST MANIFOLD & SILENCER		
7.	CAMSHAFT & DRIVING GEAR		
8.	HYDRAULIC PUMP		
9.	CRANKSHAFT & PISTON		
10.	LUB.OIL SYSTEM		
11.	COOLING WATER SYSTEM		
12.	FUEL INJECTION PUMP		
13.	GOVERNOR		
14.	FUEL INJECTION VALVE		
15.	STARTING MOTOR		
16.	GENERATOR		
17.	GASKET SET & TOOLS		

Fig.1. CYLINDER BLOCK

(A)=3TNV82A-BDWM
(B)=
(C)=
(D)=
(E)=
(F)=

No.	Lev.	Parts No.	Description	Q'ty (A)	(B)	(C)	(D)	(E)	(F)	I	R
1	1	719802-01560	BLOCK ASSY, CYLINDER	1							
4	2	124160-01910	PLUG, PT1/4	2							
5	2	171051-01921	PLUG, NPTF1	1							
6	2	124060-01050	PLUG, PT1/8	1							
7	2	129001-01250	PLUG, 50	1							
8	2	27241-120000	PLUG, 12	2							
9	2	27241-300000	PLUG 30	6							
12	2	119620-02020	BOLT, METAL CAP	8							
13	2	129795-02412	BUSH, CAMSHAFT	1							
14	2	124160-01910	PLUG, PT1/4	1							
18	2	119810-02931	BEARING, THRUST	1							
21	1	719810-02981	BEARING, MAIN	4							3
24	1	119810-01200	BOLT, HEAD	14							
25	1	119812-01330	GASKET, HEAD	1							
26	1	119810-02871	BEARING, 0.25 US	4							1
29	1	119810-02941	BEARING, THRUST 0.25	2							2

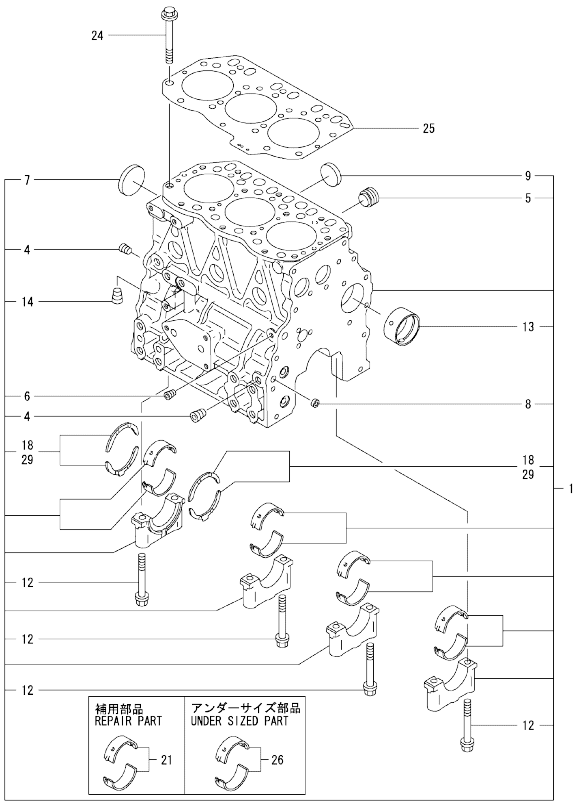

Remarks
(1)UNDER SIZED(U.S.=0.25)PART.
(2)OVER SIZED(O.S.=0.25)PART.
(3)REPAIR PART.

N:Old ←Yes/No→ New. Q:Old ←No/Yes→ New. R:Old ←Yes/Yes→ New. S:Old ←No/No→ New. W:Add. Z:Discontinued. F:Interchangeable by set. K:Q'ty Change

Copyright (C) YANMAR CO., LTD. All RightsReserved.

Fig.2. GEAR HOUSING

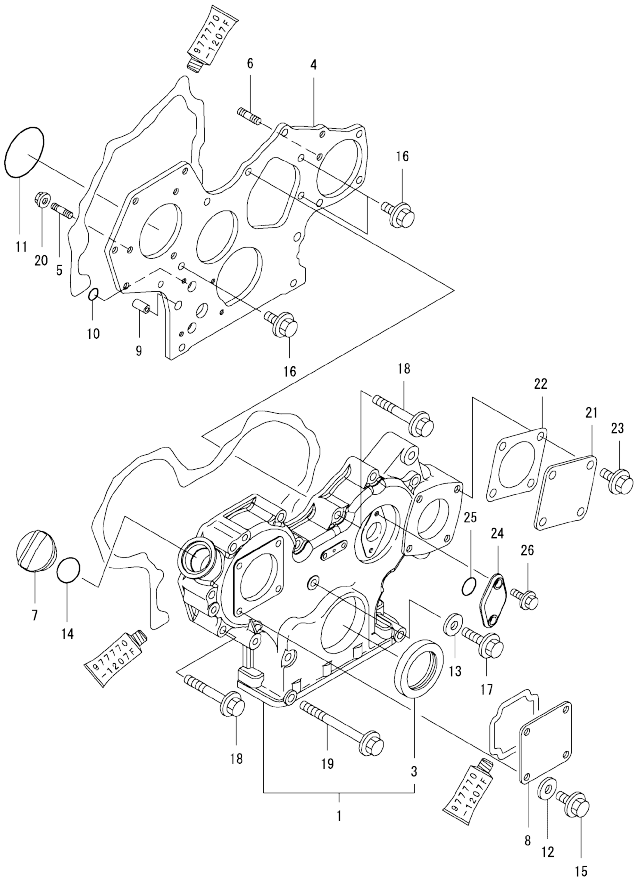

(A)=3TNV82A-BDWM (D)=
(B)= (E)=
(C)= (F)=

No.	Lev.	Parts No.	Description	Q'ty (A)	(B)	(C)	(D)	(E)	(F)	I	R
1	1	729008-01500	CASE ASSY, GEAR	1							
3	2	119934-01800	SEAL, OIL	1							
4	1	129008-01520	FLANGE, GEAR CASE	1							
5	1	119802-01561	STUD, M8X25	3							
6	1	129150-01580	STUD, M8X30	1							
7	1	124160-01751	COVER, FILLER	1							
8	1	124240-01871	COVER	1							
9	1	129795-01950	PIPE, KNOCK L=18	2							
10	1	119609-32040	O-RING, P16	2							
11	1	121850-51960	O-RING	1							
12	1	22190-080002	WASHER, SEAL 6	4							
13	1	22190-080002	WASHER, SEAL 6	1							
14	1	24311-000320	O-RING, 1AP32.0	1							
15	1	26106-080162	BOLT, M8X 16 PLATED	4							
16	1	26106-080162	BOLT, M8X 16 PLATED	3							
17	1	26106-080302	BOLT, M8X 30 PLATED	1							
18	1	26106-080552	BOLT, M8X 55 PLATED	10							
19	1	26106-080852	BOLT, M8X 85 PLATED	3							
20	1	26306-080002	NUT, M8	3							
21	1	124240-01871	COVER	1							
22	1	124240-01883	GASKET	1							
23	1	26106-080162	BOLT, M8X 16 PLATED	4							
24	1	121023-01551	COVER	1							
25	1	24341-000240	O-RING, 1AS24.0	1							
26	1	26106-060162	BOLT, M6X 16 PLATED	2							

N:Old ←Yes/No→ New. Q:Old ←No/Yes→ New. R:Old ←Yes/Yes→ New. S:Old ←No/No→ New. W:Add. Z:Discontinued. F:Interchangeable by set. K:Q'ty Change

Copyright (C) YANMAR CO., LTD. All RightsReserved.

Fig.3. FLYWHEEL HOUSING & OIL SUMP

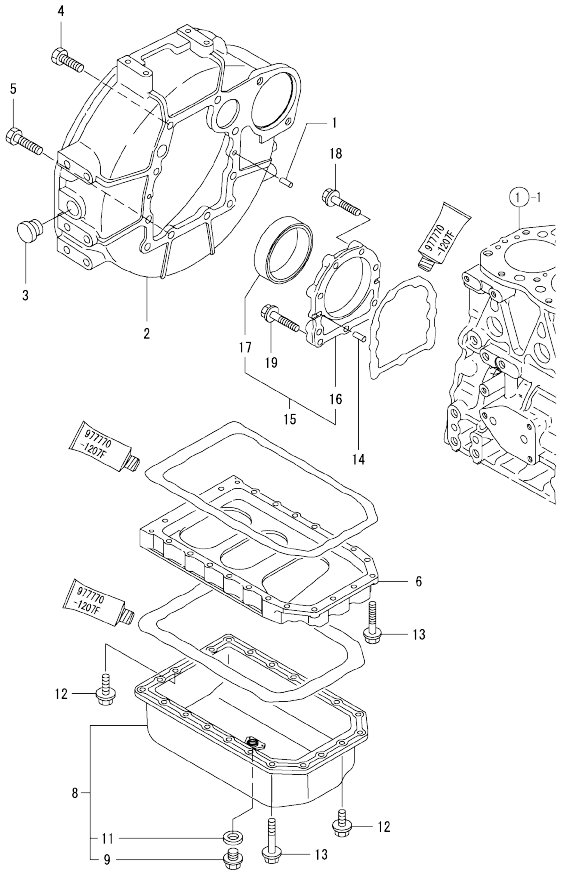

(A)=3TNV82A-BDWM (D)=
(B)= (E)=
(C)= (F)=

No.	Lev.	Parts No.	Description	Q'ty (A)	(B)	(C)	(D)	(E)	(F)	I	R
1	1	129100-01580	PIN, M8X16	2							
2	1	129612-01600	HOUSING, FLYWHEEL	1							
3	1	119620-01750	CAP	1							
4	1	26206-100252	BOLT, M10X 25 PLATED	6							
5	1	26206-100302	BOLT, M10X 30 PLATED	4							
6	1	119810-01730	SPACER, OIL SUMP	1							
8	1	119823-01770	SUMP ASSY, OIL	1							
9	2	119640-01640	PLUG, DRAIN M22	1							
11	2	22190-220002	WASHER, SEAL 22	1							
12	1	26106-080162	BOLT, M8X 16 PLATED	6							
13	1	26106-080452	BOLT, M8X 45 PLATED	22							
14	1	129100-01580	PIN, M8X16	2							
15	1	129100-01640	CASE ASSY, OIL SEAL	1							
16	2	129150-01650	CASE, OIL SEAL	1							
17	2	129795-01780	SEAL, OIL	1							
18	1	129486-01670	BOLT, M8X30	6							
19	1	26106-080352	BOLT, M8X 35 PLATED	3							

N:Old ◄Yes/No► New. Q:Old ◄No/Yes► New. R:Old ◄Yes/Yes► New. S:Old ◄No/No► New. W:Add. Z:Discontinued. F:Interchangeable by set. K:Q'ty Change

Copyright (C) YANMAR CO., LTD. All RightsReserved.

Fig.4. CYLINDER HEAD & BONNET

(A)=3TNV82A-BDWM
(B)=
(C)=
(D)=
(E)=
(F)=

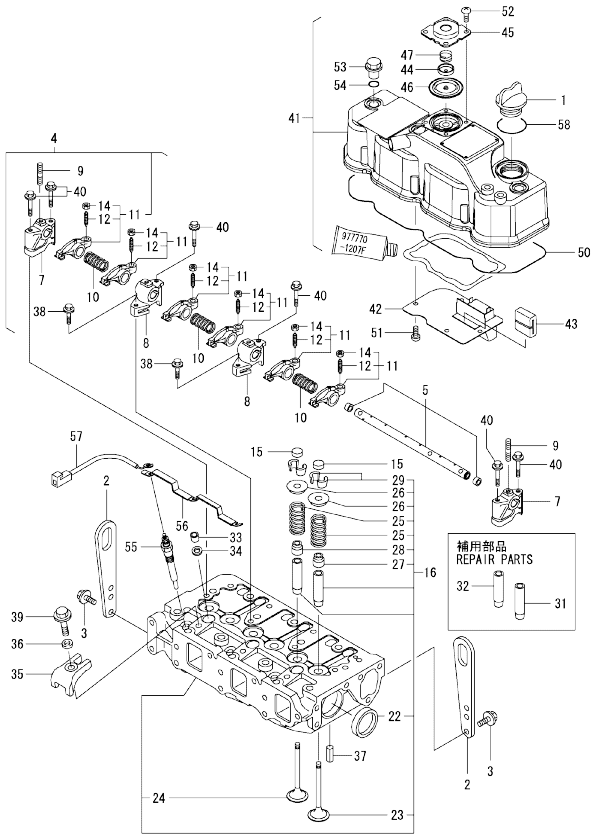

No.	Lev.	Parts No.	Description	Q'ty (A)	(B)	(C)	(D)	(E)	(F)	I	R
1	1	124160-01751	COVER, FILLER	1							
2	1	129900-07900	LIFTER	2							
3	1	26106-080162	BOLT, M8X 16 PLATED	4							
4	1	119802-11241	SHAFT ASSY, ROCKER	1							
5	2	119802-11251	SHAFT, ROCKER ARM	1							
7	2	119802-11260	SUPPORT, ROCKER ARM	2							
8	2	119802-11270	SUPPORT, ROCKER ARM	2							
9	2	119802-11280	STUD	3							
10	2	129150-11280	SPRING	3							
11	2	119802-11650	ARM, ROCKER	6							
12	3	129150-11230	SCREW, VALVE ADJUST	6							
14	3	129150-11750	NUT, M8	6							
15	1	104211-11370	CAP, VALVE	6							
16	1	119803-11700	HEAD ASSY, CYLINDER	1							
22	2	27241-400000	PLUG, 40	2							
23	2	119802-11100	VALVE, INTAKE	3							
24	2	119802-11110	VALVE, EXHAUST	3							
25	2	119810-11120	SPRING, VALVE	6							
26	2	104211-11180	RETAINER, SPRING	6							
27	2	124160-11340	SEAL, VALVE STEM	3							
28	2	119803-11340	SEAL, VALVE STEM	3							
29	2	27310-070001	COTTER, 7	6							
31	1	124060-11800	GUIDE, VALVE	3							1
32	1	119802-11810	GUIDE, VALVE	3							1
33	1	119802-11870	PROTECTOR, NOZZLE	3							
34	1	119625-11880	SEAT, NOZZLE	3							
35	1	119802-11900	RETAINER, NOZZLE	3							
36	1	120270-54410	WASHER, INJECTOR	3							
37	1	22351-060012	PIN, SPRING 6.0X12	2							
38	1	26106-080252	BOLT, M8X 25 PLATED	2							
39	1	26106-080452	BOLT, M8X 45 PLATED	3							
40	1	26106-080502	BOLT, M8X 50 PLATED	6							
41	1	119802-11350	BONNET ASSY, HEAD	1							
42	2	119802-03010	PLATE	1							
43	2	129150-03070	BAFFLE, BREATHER	1							
44	2	119802-03110	PLATE	1							
45	2	119802-03121	COVER, DIAPHRAGM	1							
46	2	119802-03130	DIAPHRAGM	1							
47	2	119802-03141	SPRING, DIAPHRAGM	1							
50	2	119802-11310	GASKET, BONNET	1							
51	2	22857-500100	SCREW, 5X10	4							
52	2	22857-500100	SCREW, 5X10	4							
53	1	124160-11360	KNOB	3							
54	1	24311-000120	O-RING, 1AP12.0	3							
55	1	129008-77800	PLUG, GLOW	3							
56	1	119803-77821	CONNECTOR, GLOW PLUG	1							
57	1	119803-77830	HARNESS, WIRE	1							
58	1	24311-000320	O-RING, 1AP32.0	1							

Remarks
(1)REPAIR PART.

N:Old $\overset{\text{Yes}}{\underset{\text{No}}{\leftrightarrow}}$ New. Q:Old $\overset{\text{No}}{\underset{\text{Yes}}{\leftrightarrow}}$ New. R:Old $\overset{\text{Yes}}{\underset{\text{Yes}}{\leftrightarrow}}$ New. S:Old $\overset{\text{No}}{\underset{\text{No}}{\leftrightarrow}}$ New. W:Add. Z:Discontinued. F:Interchangeable by set. K:Q'ty Change

Copyright (C) YANMAR CO., LTD. All RightsReserved.

Fig.5. SUCTION MANIFOLD & AIR CLEANER

(A)=3TNV82A-BDWM
(B)=
(C)=
(D)=
(E)=
(F)=

No.	Lev.	Parts No.	Description	Q'ty (A)	(B)	(C)	(D)	(E)	(F)	I	R
1	1	119802-03090	PIPE , BREATHER	1							
2	2	129410-03990	CLIP	2							
3	1	119810-12112	GASKET, MANIFOLD	1							
4	1	119802-12140	MANIFOLD, AIR INTAKE	1							
5	1	26106-080252	BOLT, M8X 25 PLATED	4							

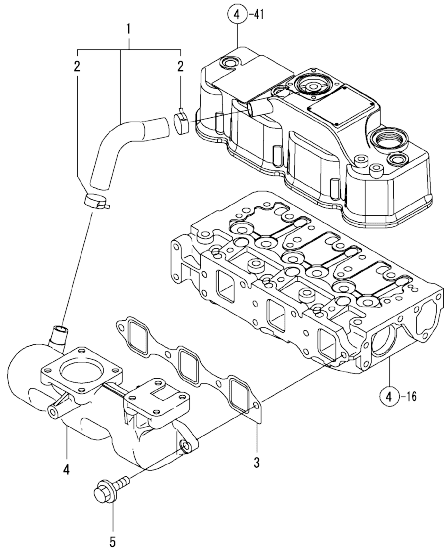

N:Old $\frac{\text{Yes}}{\text{No}}$ New. Q:Old $\frac{\text{No}}{\text{Yes}}$ New. R:Old $\frac{\text{Yes}}{\text{Yes}}$ New. S:Old $\frac{\text{No}}{\text{No}}$ New. W:Add. Z:Discontinued. F:Interchangeable by set. K:Q'ty Change

Copyright (C) YANMAR CO., LTD. All RightsReserved.

Fig.6. EXHAUST MANIFOLD & SILENCER

(A)=3TNV82A-BDWM (D)=
(B)= (E)=
(C)= (F)=

No.	Lev.	Parts No.	Description	Q'ty (A)	(B)	(C)	(D)	(E)	(F)	I	R
1	1	119802-13130	MANIFOLD, EXHAUST	1							
2	1	119810-13110	GASKET	1							
3	1	119802-13640	BOLT, M8X60 10.9T	4							
4	1	119131-18320	STUD, M8X22	4							
5	1	26306-080002	NUT, M8	2							
6	1	119802-13740	STUD, M8X60	2							

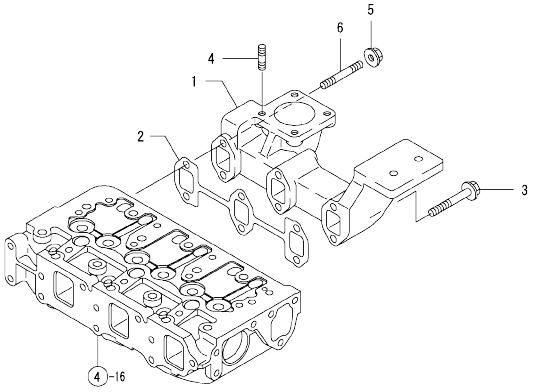

N:Old ←Yes/No→ New. Q:Old ←No/Yes→ New. R:Old ←Yes/Yes→ New. S:Old ←No/No→ New. W:Add. Z:Discontinued. F:Interchangeable by set. K:Q'ty Change

Copyright (C) YANMAR CO., LTD. All RightsReserved.

Fig.7. CAMSHAFT & DRIVING GEAR

(A)=3TNV82A-BDWM
(B)=
(C)=
(D)=
(E)=
(F)=

No.	Lev.	Parts No.	Description	Q'ty (A)	(B)	(C)	(D)	(E)	(F)	I	R
1	1	129150-14200	TAPPET	6							
2	1	119810-14400	ROD, PUSH	6							
3	1	119802-14580	CAMSHAFT ASSY	1							
4	2	129150-02450	BEARING, THRUST	1							
6	2	129150-14101	GEAR, CAMSHAFT	1							
7	2	22512-070140	KEY, 7X 14	1							
8	1	26106-080142	BOLT, M8X 14 PLATED	2							
9	1	119803-25050	SHAFT, IDLE	1							
10	1	119802-25101	GEAR ASSY, IDLE	1							
13	1	119802-25071	BUSH, IDLE GEAR	1							1
14	1	26106-080402	BOLT, M8X 40 PLATED	3							
15	1	129150-25301	BOLT	4							
16	1	119802-25901	GEAR, PUMP	1							
17	1	129150-01881	GASKET	1							
18	1	129150-26000	DRIVE ASSY, PUMP	1							
19	2	129150-26050	BRACKET, PUMP	1							
21	2	24105-060064	BEARING, BALL 6006Z	2							

Remarks
(1)REPAIR PART.

N:Old ←Yes/No→ New. Q:Old ←No/Yes→ New. R:Old ←Yes/Yes→ New. S:Old ←No/No→ New. W:Add. Z:Discontinued. F:Interchangeable by set. K:Q'ty Change

Copyright (C) YANMAR CO., LTD. All RightsReserved.

0CW10-M56800 3TNV82A-BDWM

Fig.8. HYDRAULIC PUMP

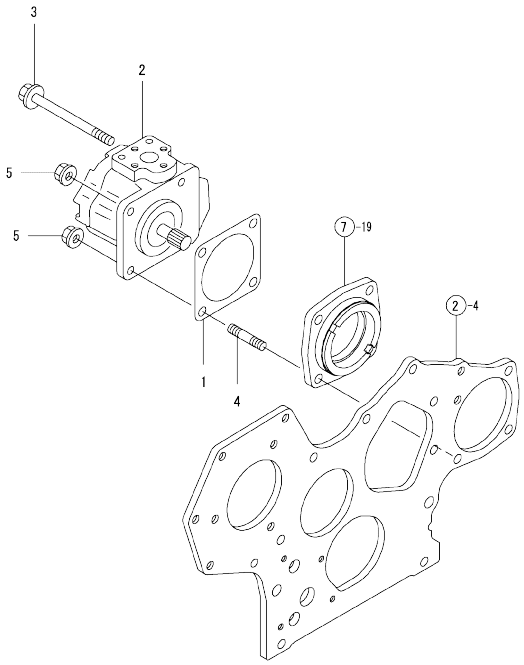

(A)=3TNV82A-BDWM (D)=
(B)= (E)=
(C)= (F)=

No.	Lev.	Parts No.	Description	Q'ty (A)	(B)	(C)	(D)	(E)	(F)	I	R
1	1	124240-01883	GASKET, PUMP	1							
1-1	1	129C26-01890	GASKET, PUMP	1							N
	(A=EF7240)										
2	1	119641-26010	PUMP, HYDRAULIC	1							
2-1	1	119641-26020	PUMP, HYDRAULIC	1							N
	(A=EF7240)										
3	1	26106-080902	BOLT, M8X 90 PLATED	2							
3-1	1	26106-080952	BOLT, M8X 95 PLATED	2							N
	(A=EF7240)										
4	1	26216-080402	STUD, M8X 40	1							
5	1	26306-080002	NUT, M8	2							

N:Old ←Yes/No→ New. Q:Old ←No/Yes→ New. R:Old ←Yes/Yes→ New. S:Old ←No/No→ New. W:Add. Z:Discontinued. F:Interchangeable by set. K:Q'ty Change

Copyright (C) YANMAR CO., LTD. All RightsReserved.

Fig.9. CRANKSHAFT & PISTON

(A)=3TNV82A-BDWM
(B)=
(C)=
(D)=
(E)=
(F)=

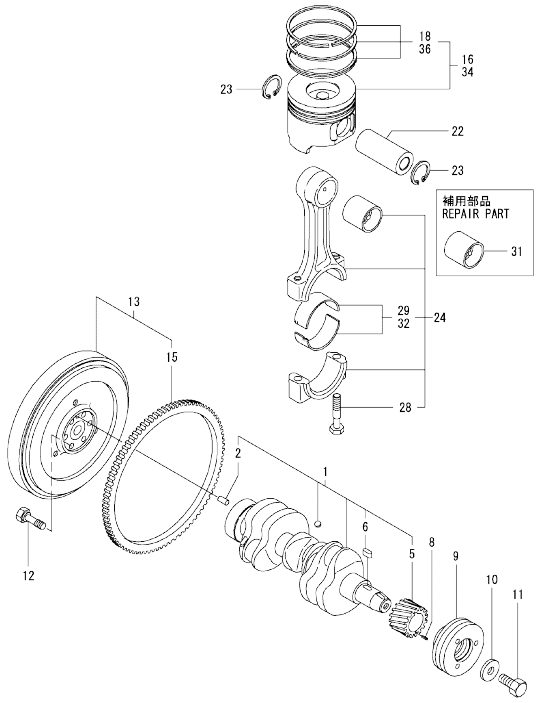

No.	Lev.	Parts No.	Description	Q'ty (A)	(B)	(C)	(D)	(E)	(F)	I	R
1	1	119803-21000	CRANKSHAFT ASSY	1							
2	2	129100-01580	PIN, M8X16	1							
5	2	119803-21200	GEAR, CRANKSHAFT	1							
6	2	22512-070140	KEY, 7X 14	1							
8	1	22351-030010	PIN, SPRING 3.0X10	1							
9	1	119802-21660	V-PULLEY, 120	1							
10	1	129795-21661	WASHER	1							
11	1	121850-21680	BOLT	1							
12	1	121111-21501	BOLT, FLYWHEEL	6							
13	1	129489-21590	FLYWHEEL ASSY	1							
15	2	119865-21600	GEAR, RING	1							
16	1	119803-22080	PISTON ASSY	3							
18	2	119802-22500	RING SET, PISTON	3							
22	1	119813-22300	PIN, PISTON	3							
23	1	129792-22400	CIRCLIP, 23	6							
24	1	719810-23100	ROD ASSY, CONNECTING	3							
28	2	119810-23200	BOLT, CONNECTING ROD	6							
29	2	119810-23601	BEARING, CRANK PIN	3							
31	1	119810-23910	BEARING, PISTON PIN	3							1
32	1	119810-23611	BEARING, 0.25 US	3							2
34	1	719803-22900	PISTON ASSY, 0.25 OS	3							3
36	2	719802-22950	RING SET, 0.25 OS	3							3

Remarks
(1)REPAIR PART.
(2)UNDER SIZED(U.S.=0.25)PART.
(3)OVER SIZED(O.S.=0.25)PART.

N:Old ←Yes/No→ New. Q:Old ←No/Yes→ New, R:Old ←Yes/Yes→ New. S:Old ←No/No→ New. W:Add. Z:Discontinued. F:Interchangeable by set. K:Q'ty Change

Copyright (C) YANMAR CO., LTD. All RightsReserved.

Fig.10. LUB.OIL SYSTEM

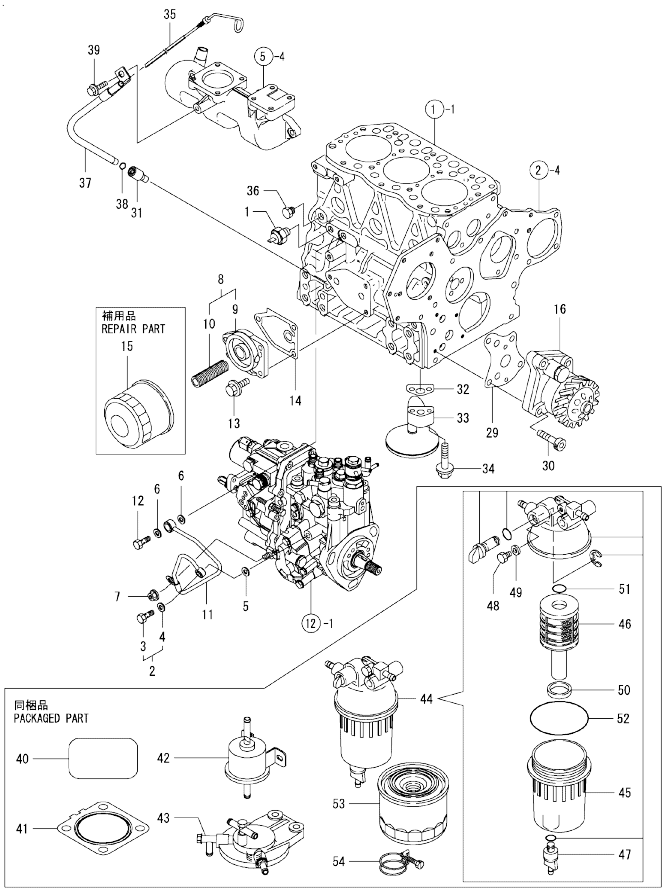

(A)=3TNV82A-BDWM
(B)=
(C)=
(D)=
(E)=
(F)=

No.	Lev.	Parts No.	Description	Q'ty (A)	(B)	(C)	(D)	(E)	(F)	I	R
1	1	119761-39450	SWITCH, 0.5KG	1							
2	1	129005-59830	BOLT ASSY, JOINT M8	1							
3	2	23857-030000	BOLT, JOINT 3	1							
4	2	22190-080002	WASHER, SEAL 6	1							
5	1	22190-080002	WASHER, SEAL 6	1							
6	1	22190-100002	WASHER, SEAL 10	2							
7	1	26366-060002	NUT, M6	1							
8	1	119802-35100	BRACKET ASSY, FILTER	1							
9	2	119802-35110	BRACKET, FILTER	1							
10	2	129100-35140	STUD	1							
11	1	119802-39450	PIPE ASSY, OIL	1							
12	1	124160-39140	BOLT, PIPE JOINT M10	1							
13	1	26106-080202	BOLT, M8X 20 PLATED	3							
14	1	129150-35111	GASKET	1							
15	1	129150-35153	FILTER	1							1
16	1	129001-32001	PUMP ASSY, OIL	1							
29	1	129150-32020	GASKET, PUMP	1							
30	1	26450-060252	BOLT, M6X 25	4							
31	1	119260-34810	GUIDE, DIPSTICK	1							
32	1	129150-35042	GASKET	1							
33	1	119810-35300	PIPE ASSY, OIL INLET	1							
34	1	26106-080352	BOLT, M8X 35 PLATED	2							
35	1	119802-34821	DIPSTICK, OIL	1							
36	1	171056-49120	PLUG, DRAIN	1							
37	1	119802-34850	GUIDE, DIPSTICK	1							
38	1	24316-240100	O-RING, 4DP10A	1							
39	1	26106-080162	BOLT, M8X 16 PLATED	1							
40	1	114110-07760	LABEL, FUEL CAUTION	1							
41	1	129004-13200	GASKET, SILENCER	1							
42	1	119225-52102	PUMP ASSY, FUEL FEED	1							
43	1	129004-55612	BRACKET, FILTER	1							
44	1	129242-55700	SEPARATOR ASSY	1							
45	2	129242-55720	CUP	1							
46	2	129242-55730	ELEMENT	1							
47	2	129242-55740	PLUG, DRAIN	1							
48	2	129242-55750	VALVE, AIR VENT	1							
49	2	129242-55760	GASKET	1							
50	2	129242-55770	FLOAT	1							
51	2	24311-000160	O-RING, 1AP16.0	1							
52	2	24321-000750	O-RING, 1AG75.0	1							
53	1	129004-55801	FILTER, FUEL	1							
54	1	23010-038000	CLAMP, 38	6							

Remarks
(1)REPAIR PART.

N:Old ←Yes/No→ New. Q:Old ←No/Yes→ New. R:Old ←Yes/Yes→ New. S:Old ←No/No→ New. W:Add. Z:Discontinued. F:Interchangeable by set. K:Q'ty Change

Copyright (C) YANMAR CO., LTD. All RightsReserved.

Fig.11. COOLING WATER SYSTEM

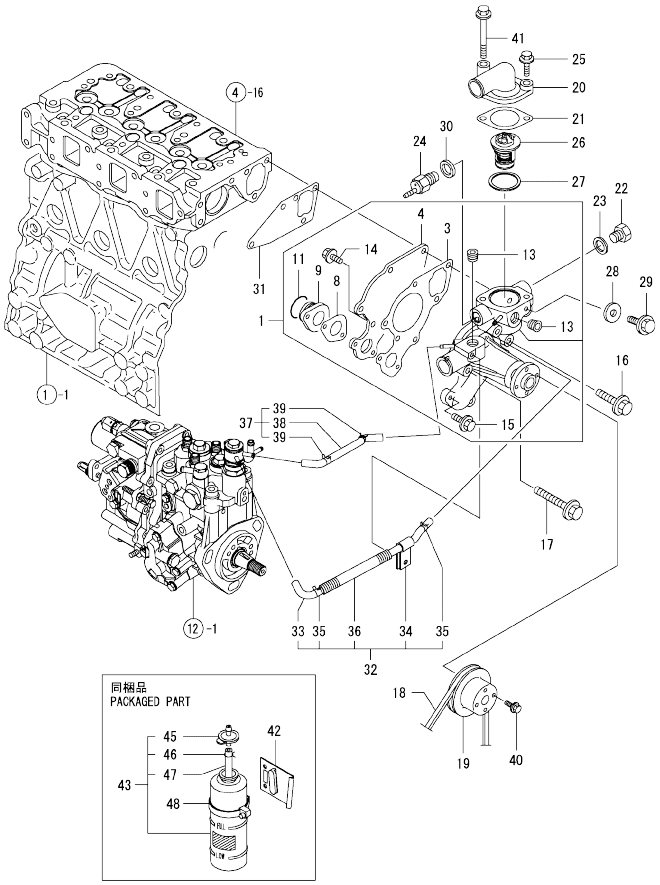

(A)=3TNV82A-BDWM (D)=
(B)= (E)=
(C)= (F)=

No.	Lev.	Parts No.	Description	Q'ty (A)	(B)	(C)	(D)	(E)	(F)	I	R
1	1	119802-42001	PUMP ASSY, WATER	1							
3	2	119810-42051	GASKET, WATER PUMP	1							
4	2	119810-42120	PLATE	1							
8	2	119810-42281	GASKET, WATER PUMP	1							
9	2	119810-42290	PIPE	1							
11	2	129054-42320	O-RING	1							
13	2	23876-030000	PLUG, R03	2							
14	2	26106-060142	BOLT, M6X 14 PLATED	2							
15	2	26106-060202	BOLT, M6X 20 PLATED	2							
16	1	26106-080352	BOLT, M8X 35 PLATED	1							
17	1	26106-080552	BOLT, M8X 55 PLATED	3							
18	1	25132-003700	V-BELT, A37	1							
19	1	129155-42350	V-PULLEY	1							
20	1	124101-49531	COVER, THERMOSTAT	1							
21	1	129795-49551	GASKET	1							
22	1	121450-42450	PLUG, M16	1							
23	1	124465-44950	GASKET, 16	1							
24	1	121250-44901	SWITCH, 110	1							
25	1	26106-080252	BOLT, M8X 25 PLATED	1							
26	1	129457-49801	THERMOSTAT, 82	1							
27	1	129150-49811	GASKET, THERMOSTAT	1							
28	1	23414-080000	GASKET, 8X1.0	1							
29	1	26106-080122	BOLT, M8X 12 PLATED	1							
30	1	124465-44950	GASKET, 16	1							
31	1	129486-42050	GASKET, WATER PUMP	1							
32	1	119802-49610	PIPE ASSY, WATER	1							
33	2	119802-49711	PIPE ASSY, WATER	1							
34	2	119802-49730	RETAINER, PIPE	1							
35	2	124722-59050	CLIP, HOSE 9	2							
36	2	119802-59320	TUBE, CORRUGATED	1							
37	1	119802-49620	PIPE ASSY, WATER	1							
38	2	119802-49721	PIPE ASSY, WATER	1							
39	2	124722-59050	CLIP, HOSE 9	2							
40	1	26106-060162	BOLT, M6X 16 PLATED	4							
41	1	26106-080652	BOLT, M8X 65 PLATED	1							
42	1	121256-44600	BRACKET, SUB TANK	1							
43	1	124450-44510	TANK ASSY, SUB	1							
45	2	124450-44530	CAP	1							
46	2	124450-44560	RETAINER	1							
47	2	23061-070230	PIPE, 7X 230	1							
48	1	124450-44550	BAND	1							

N:Old ←Yes/No→ New. Q:Old ←No/Yes→ New. R:Old ←Yes/Yes→ New. S:Old ←No/No→ New. W:Add. Z:Discontinued. F:Interchangeable by set. K:Q'ty Change

Copyright (C) YANMAR CO., LTD. All RightsReserved.

Fig.12. FUEL INJECTION PUMP

(A)=3TNV82A-BDWM
(B)=
(C)=
(D)=
(E)=
(F)=

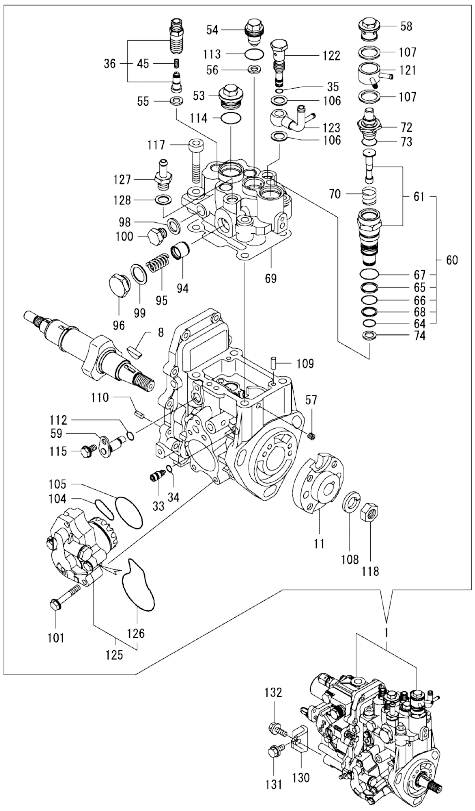

No.	Lev.	Parts No.	Description	Q'ty (A)	(B)	(C)	(D)	(E)	(F)	I	R
1	1	719936-51391	PUMP ASSY, INJECTION	1							1
8	2	119802-51090	KEY, 4X16	1							
11	2	158552-51151	FLANGE	1							
33	2	158600-51270	STOPPER, TAPPET	1							
34	2	158563-51281	O-RING, 4D S6	1							
35	2	158563-51281	O-RING, 4D S6	1							
36	2	129008-51390	VALVE ASSY, DELIVERY	3							
45	3	158563-51330	SPRING, DELIVERY	3							
53	2	158601-51550	PLUG	1							
54	2	119802-51560	PLUG, BARREL	1							
55	2	158552-51571	GASKET	3							
56	2	158552-51571	GASKET	1							
57	2	158557-51570	PLUG	1							
58	2	158601-51570	PLUG	1							
59	2	158552-51580	LIFTER	1							
60	2	119802-51590	TIMER SET	1							
61	3	119802-51600	TIMER ASSY	1							
64	3	158553-51670	O-RING, 1011	1							
65	3	119802-51680	RING, BACK UP	1							
66	3	119802-51690	O-RING	1							
67	3	24356-010200	O-RING, 4D1020	1							
68	3	24372-000150	RING, BACK UP T2P15	1							
69	2	158552-51600	GASKET	1							
70	2	158553-51630	SPRING, TIMER	1							
72	2	158553-51650	ELEMENT	1							
73	2	158553-51660	O-RING, P14	1							
74	2	158553-51680	GASKET	1							
94	2	158601-51770	PISTON	1							
95	2	158552-51781	SPRING	1							
96	2	158601-51790	PLUG	1							
98	2	22190-120002	WASHER, SEAL 12	1							
99	2	22190-180002	WASHER, SEAL 18	1							
100	2	158553-51930	PLUG, M12	1							
101	2	158553-51770	BOLT	4							
104	2	158552-52311	O-RING	1							
105	2	158552-52400	O-RING, 4E S42	1							
106	2	22190-120002	WASHER, SEAL 12	2							
107	2	22190-180002	WASHER, SEAL 18	2							
108	2	22217-140000	WASHER, SPRING 14	1							
109	2	22312-050140	PIN, PARALLEL M5X14	2							
110	2	22351-050010	PIN, SPRING 5.0X10	2							
112	2	24311-000070	O-RING, 1AP7.0	1							
113	2	24356-010180	O-RING, 4D1018	1							
114	2	24356-010200	O-RING, 4D1020	1							
115	2	26106-060102	BOLT, M6X 10 PLATED	1							
117	2	26450-080452	BOLT, M8X 45	4							
118	2	26776-140002	NUT, LOCK M14	1							
121	2	158553-51551	JOINT	1							
122	2	158601-51650	JOINT, OVER FLOW	1							
123	2	158552-51670	JOINT, OVER FLOW	1							
125	2	158552-52100	PUMP ASSY, FUEL FEED	1							

Remarks
(1)GOVERNOR ASSY(FIG.13) IS INCORPORATED IN THIS FOP.CMP (REF.NO.1).

N:Old ←Yes/No→ New. Q:Old ←No/Yes→ New. R:Old ←Yes/Yes→ New. S:Old ←No/No→ New. W:Add. Z:Discontinued. F:Interchangeable by set. K:Q'ty Change

++ CONTINUE ++

Copyright (C) YANMAR CO., LTD. All RightsReserved.

Fig.12. FUEL INJECTION PUMP

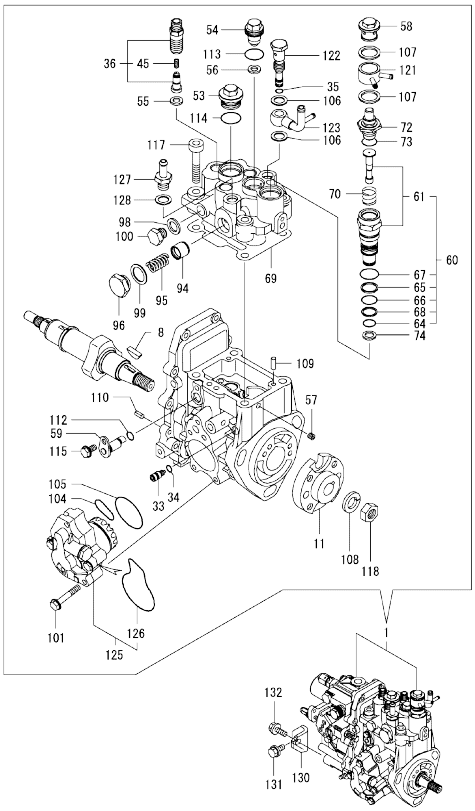

Remarks
(1)GOVERNOR ASSY(FIG.13) IS
INCORPORATED IN THIS FOP.CMP
(REF.NO.1).

(A)=3TNV82A-BDWM (D)=
(B)= (E)=
(C)= (F)=

No.	Lev.	Parts No.	Description	Q'ty (A)	(B)	(C)	(D)	(E)	(F)	I	R
126	3	158552-52500	O-RING	1							
127	2	119934-59910	JOINT, PIPE	1							
128	2	22190-120002	WASHER, SEAL 12	1							
130	1	119802-51250	RETAINER, PUMP	1							
131	1	26106-080162	BOLT, M8X 16 PLATED	1							
132	1	26106-080202	BOLT, M8X 20 PLATED	1							

N:Old ←Yes/No→ New. Q:Old ←No/Yes→ New. R:Old ←Yes/Yes→ New. S:Old ←No/No→ New. W:Add. Z:Discontinued. F:Interchangeable by set. K:Q'ty Change

Copyright (C) YANMAR CO., LTD. All RightsReserved.

Fig.13. GOVERNOR

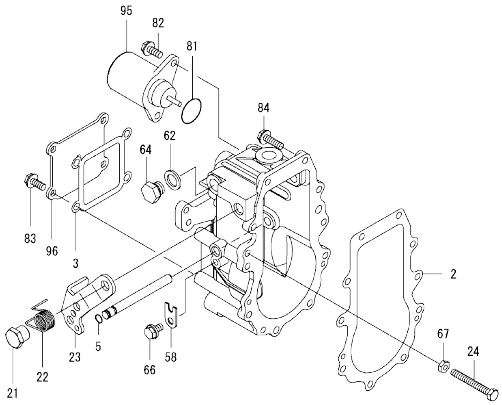

Remarks
* THIS FIGURE(GOVERNOR ASSY)IS INCORPORATED IN THE FUEL INJECTION PUMP ASSY(FIG.12).

(A)=3TNV82A-BDWM (D)=
(B)= (E)=
(C)= (F)=

No.	Lev.	Parts No.	Description	Q'ty (A)	(B)	(C)	(D)	(E)	(F)	I	R
2	2	158553-61050	GASKET	1							
3	2	158553-61070	GASKET	1							
5	2	129155-51280	O-RING, S6	1							
21	2	129255-61410	NUT, LOCK	1							
22	2	119807-61420	SPRING, RETURN	1							
23	2	158552-61441	LEVER, REGULATOR	1							
24	2	129155-61460	BOLT, IDLE	1							
58	2	119660-61901	RETAINER, SHAFT	1							
62	2	22190-120002	WASHER, SEAL 12	1							
64	2	158553-51930	PLUG, M12	1							
66	2	26106-060102	BOLT, M6X 10 PLATED	1							
67	2	26756-060002	NUT, LOCK M6	1							
81	2	158552-61900	O-RING	1							
82	2	26106-060142	BOLT, M6X 14 PLATED	2							
83	2	26106-060142	BOLT, M6X 14 PLATED	4							
84	2	26106-060202	BOLT, M6X 20 PLATED	10							
95	2	119233-77932	SOLENOID, STOP	1							
96	2	129642-61060	COVER, GOVERNOR CASE	1							

N:Old ←Yes/No→ New. Q:Old ←No/Yes→ New. R:Old ←Yes/Yes→ New. S:Old ←No/No→ New. W:Add. Z:Discontinued. F:Interchangeable by set. K:Q'ty Change

Copyright (C) YANMAR CO., LTD. All RightsReserved.

Fig.14. FUEL INJECTION VALVE

(A)=3TNV82A-BDWM (D)=
(B)= (E)=
(C)= (F)=

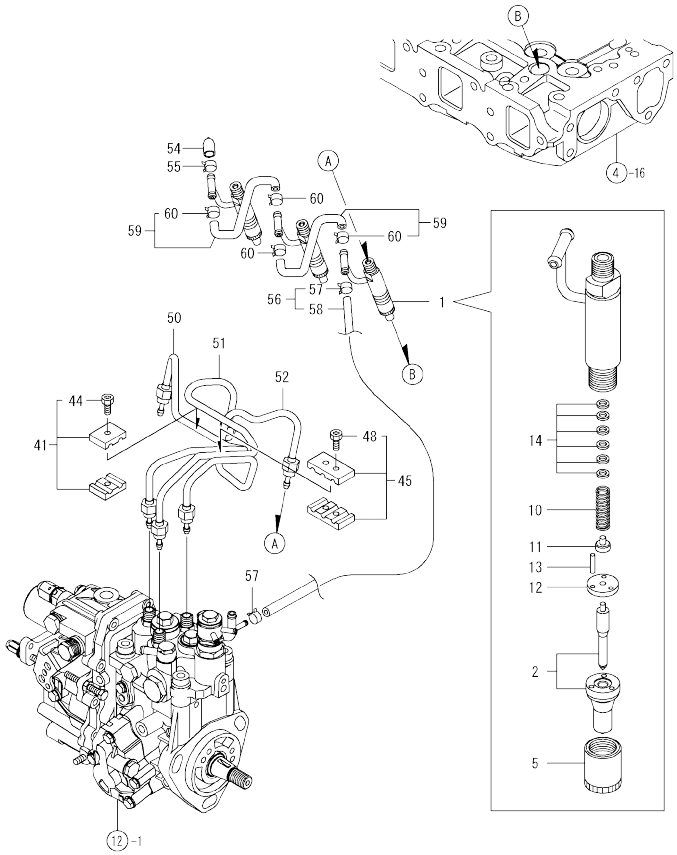

No.	Lev.	Parts No.	Description	Q'ty (A)	(B)	(C)	(D)	(E)	(F)	I	R
1	1	729008-53100	VALVE ASSY,INJECTION	3							
2	2	129008-53000	VALVE ASSY,INJECTION	3							
5	2	114250-53080	NUT, NOZZLE D16.95	3							
10	2	114250-53120	SPRING, NOZZLE	3							
11	2	114250-53130	SEAT, SPRING	3							
12	2	114250-53140	PLATE	3							
13	2	114250-53210	PIN	6							
14	2	119803-53400	SHIM SET	3							
41	1	119305-59120	RETAINER, PIPE	1							
44	2	129150-59131	BOLT, M4X14	1							
45	1	129150-59120	RETAINER, PIPE	1							
48	2	129150-59131	BOLT, M4X14	2							
50	1	119802-59960	PIPE ASSY, INJECTION	1							
51	1	119802-59970	PIPE ASSY, INJECTION	1							
52	1	119802-59980	PIPE ASSY, INJECTION	1							
54	1	119593-59581	CAP	1							
55	1	124060-77680	CLIP, HOSE 10	1							
56	1	119802-59550	PIPE ASSY, RETURN	1							
57	2	124722-59050	CLIP, HOSE 9	2							
58	2	119802-59560	PIPE, FUEL RETURN	1							
59	1	129486-59551	PIPE ASSY, RETURN	2							
60	2	124722-59050	CLIP, HOSE 9	4							

N:Old ←Yes/No→ New. Q:Old ←No/Yes→ New. R:Old ←Yes/Yes→ New. S:Old ←No/No→ New. W:Add. Z:Discontinued. F:Interchangeable by set. K:Q'ty Change

Copyright (C) YANMAR CO., LTD. All RightsReserved.

Fig.15. STARTING MOTOR

(A)=3TNV82A-BDWM
(B)=
(C)=
(D)=
(E)=
(F)=

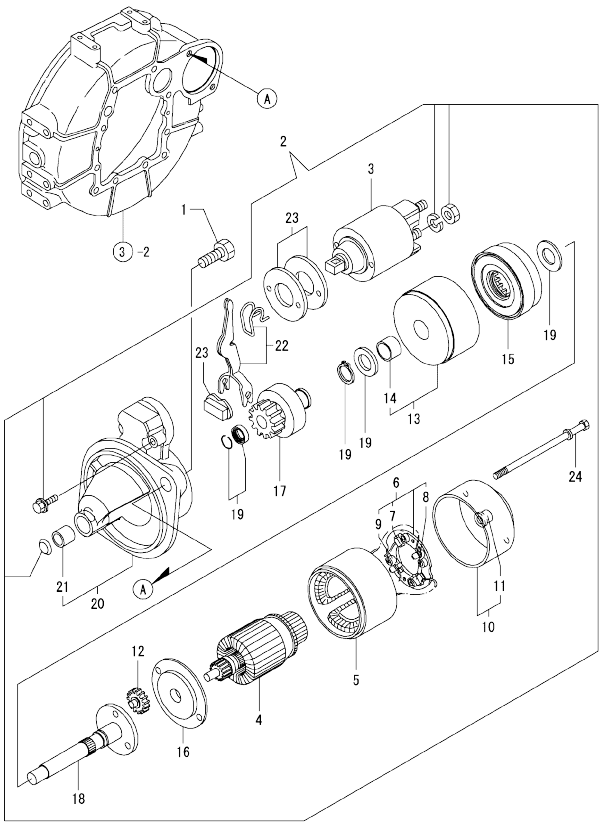

No.	Lev.	Parts No.	Description	Q'ty (A)	(B)	(C)	(D)	(E)	(F)	I	R
1	1	26116-120252	BOLT, M12X 25 PLATED	2							
2	1	129242-77010	STARTER	1							
3	2	129698-77020	SWITCH ASSY	1							
4	2	129242-77100	ARMATURE ASSY	1							
5	2	129242-77110	YOKE ASSY	1							
6	2	129242-77120	HOLDER ASSY, BRUSH	1							
7	3	129242-77130	BRUSH	2							
8	3	129242-77140	BRUSH SET	1							
9	3	129242-77150	SPRING	4							
10	2	129242-77160	COVER ASSY	1							
11	3	129242-77170	METAL	1							
12	2	118400-77170	GEAR	3							
13	2	129242-77180	BRACKET	1							
14	3	129698-77190	BRACKET	1							
15	2	129698-77200	GEAR, INTERNAL	1							
16	2	129242-77210	BRACKET	1							
17	2	129698-77220	PINION ASSY	1							
18	2	129698-77230	SHAFT	1							
19	2	129698-77250	WASHER SET	1							
20	2	129242-77260	CASE ASSY	1							
21	3	X2114535200	METAL, STARTER	1							
22	2	129242-77270	LEVER SET	1							
23	2	129242-77280	COVER ASSY, DUST	1							
24	2	124195-77770	BOLT, THROUGH	2							

N:Old ←Yes/No→ New. Q:Old ←No/Yes→ New. R:Old ←Yes/Yes→ New. S:Old ←No/No→ New. W:Add. Z:Discontinued. F:Interchangeable by set. K:Q'ty Change

Copyright (C) YANMAR CO., LTD. All RightsReserved.

Fig.16. GENERATOR

(A)=3TNV82A-BDWM
(B)=
(C)=
(D)=
(E)=
(F)=

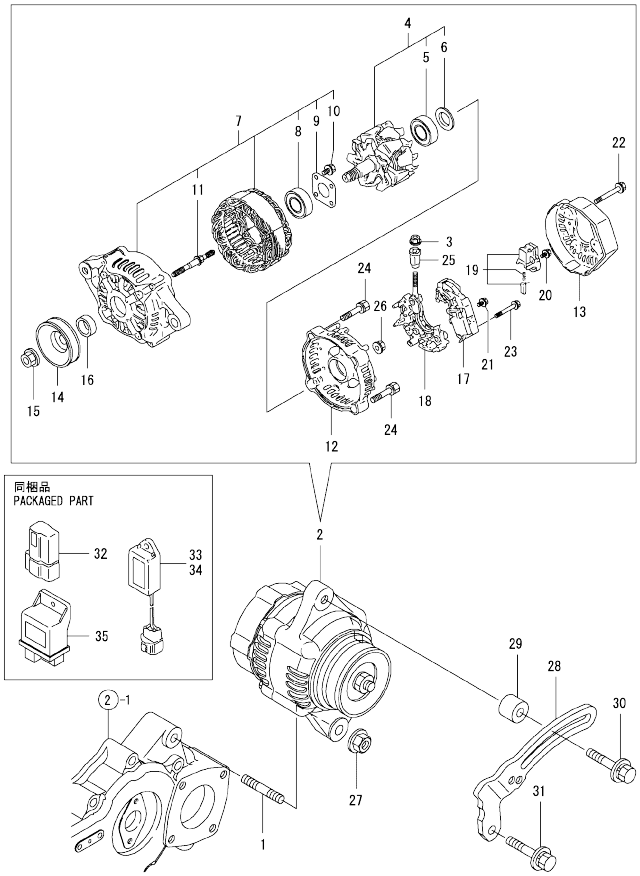

No.	Lev.	Parts No.	Description	Q'ty (A)	(B)	(C)	(D)	(E)	(F)	I	R
1	1	129795-01900	STUD	1							
2	1	119626-77210	ALTERNATOR, 12V-55A	1							
3	2	X9490561001	NUT	1							
4	2	129052-77380	ROTOR ASSY	1							
5	3	123501-79240	BEARING, BALL	1							
6	3	119620-79250	COVER	1							
7	2	129052-77422	FRAME ASSY	1							
8	3	119620-79200	BEARING, BALL	1							
9	3	119620-79210	PLATE, RETAINER	1							
10	3	119620-79220	SCREW	4							
11	3	119620-79230	STUD	2							
12	2	128401-77440	FRAME	1							
13	2	119626-77450	COVER	1							
14	2	119620-77461	PULLEY	1							
15	2	119620-77471	NUT	1							
16	2	119620-77490	COLLAR	1							
17	2	129423-77710	REGULATOR ASSY	1							
18	2	129052-79260	HOLDER	1							
19	2	129052-79270	HOLDER, BRUSH	1							
20	2	119620-79290	SCREW	6							
21	2	119620-79300	SCREW	1							
22	2	119620-79310	BOLT	3							
23	2	119620-79320	SCREW	2							
24	2	119620-79330	BOLT	2							
25	2	119620-79340	BUSH, INSULATION	1							
26	2	119620-79350	NUT	2							
27	1	26306-100002	NUT, M10	1							
28	1	129064-77330	ADJUSTER	1							
29	1	129067-77340	SPACER	1							
30	1	129972-77341	BOLT, ADJUSTER L=50	1							
31	1	26106-080502	BOLT, M8X 50 PLATED	1							
32	1	119643-66900	DIODE	1							
33	1	128300-77920	TIMER	1							
34	1	129211-77920	TIMER	1							
35	1	119802-77200	RELAY, SAFETY	1							

N:Old ←Yes/No→ New. Q:Old ←No/Yes→ New. R:Old ←Yes/Yes→ New. S:Old ←No/No→ New. W:Add. Z:Discontinued. F:Interchangeable by set. K:Q'ty Change

Copyright (C) YANMAR CO., LTD. All RightsReserved.

Fig.17. GASKET SET & TOOLS

(A)=3TNV82A-BDWM
(B)=
(C)=
(D)=
(E)=
(F)=

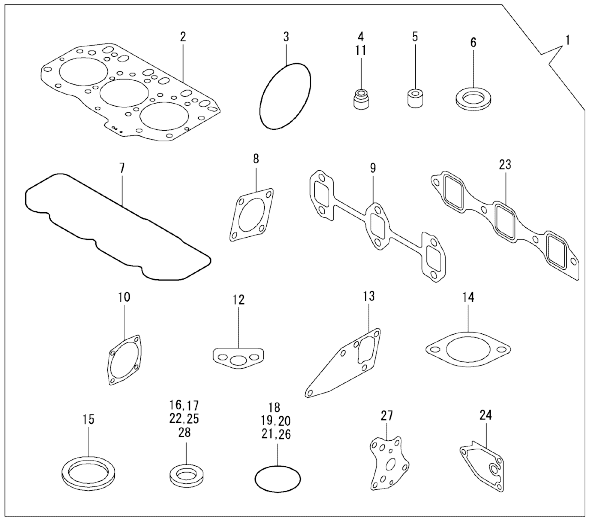

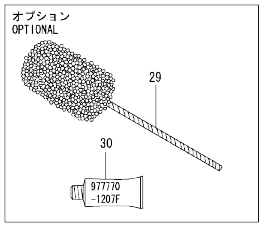

No.	Lev.	Parts No.	Description	Q'ty (A)	(B)	(C)	(D)	(E)	(F)	I	R
1	1	XXXXXX-XXXXX	GASKET SET(NON-ASB.)	1							1
2	2	119812-01330	GASKET, HEAD	1							
3	2	121850-51960	O-RING	1							
4	2	119803-11340	SEAL, VALVE STEM	3							
5	2	119802-11870	PROTECTOR, NOZZLE	3							
6	2	119625-11880	SEAT, NOZZLE	3							
7	2	119802-11310	GASKET, BONNET	1							
8	2	124240-01883	GASKET	2							
9	2	119810-13110	GASKET	1							
10	2	129150-01881	GASKET	1							
11	2	124160-11340	SEAL, VALVE STEM	3							
12	2	129150-35042	GASKET	1							
13	2	129486-42050	GASKET, WATER PUMP	1							
14	2	129795-49551	GASKET	1							
15	2	129150-49811	GASKET, THERMOSTAT	1							
16	2	23414-080000	GASKET, 8X1.0	1							
17	2	22190-080002	WASHER, SEAL 6	7							
18	2	24316-240100	O-RING, 4DP10A	1							
19	2	24311-000120	O-RING, 1AP12.0	3							
20	2	24311-000320	O-RING, 1AP32.0	2							
21	2	24341-000240	O-RING, 1AS24.0	1							
22	2	22190-100002	WASHER, SEAL 10	2							
23	2	119810-12112	GASKET, MANIFOLD	1							
24	2	129150-35111	GASKET	1							
25	2	22190-220002	WASHER, SEAL 22	1							
26	2	119609-32040	O-RING, P16	2							
27	2	129150-32020	GASKET, PUMP	1							
28	2	124465-44950	GASKET, 16	2							
29	1	129400-92420	HONE	1							1
30	1	977770-1207F	GASKET.LIQUID	1							1

Remarks
(1)OPTIONAL PART.

N:Old ←Yes/No→ New. Q:Old ←No/Yes→ New. R:Old ←Yes/Yes→ New. S:Old ←No/No→ New. W:Add. Z:Discontinued. F:Interchangeable by set. K:Q'ty Change

Copyright (C) YANMAR CO., LTD. All RightsReserved.

Parts No. Index

Parts No.	Fig. No.	Ref. No.
104211-11180	4	26
104211-11370	4	15
114110-07760	10	40
114250-53080	14	5
114250-53120	14	10
114250-53130	14	11
114250-53140	14	12
114250-53210	14	13
118400-77170	15	12
119131-18320	6	4
119225-52102	10	42
119233-77932	13	95
119260-34810	10	31
119305-59120	14	41
119593-59581	14	54
119609-32040	2	10
	17	26
119620-01750	3	3
119620-02020	1	12
119620-77461	16	14
119620-77471	16	15
119620-77490	16	16
119620-79200	16	8
119620-79210	16	9
119620-79220	16	10
119620-79230	16	11
119620-79250	16	6
119620-79290	16	20
119620-79300	16	21
119620-79310	16	22
119620-79320	16	23
119620-79330	16	24
119620-79340	16	25
119620-79350	16	26
119625-11880	4	34
	17	6
119626-77210	16	2
119626-77450	16	13
119640-01640	3	9
119641-26010	8	2
119641-26020	8	2 -1
119643-66900	16	32
119660-61901	13	58
119761-39450	10	1
119802-01561	2	5
119802-03010	4	42
119802-03090	5	1
119802-03110	4	44
119802-03121	4	45
119802-03130	4	46

Parts No.	Fig. No.	Ref. No.
119802-03141	4	47
119802-11100	4	23
119802-11110	4	24
119802-11241	4	4
119802-11251	4	5
119802-11260	4	7
119802-11270	4	8
119802-11280	4	9
119802-11310	4	50
	17	7
119802-11350	4	41
119802-11650	4	11
119802-11810	4	32
119802-11870	4	33
	17	5
119802-11900	4	35
119802-12140	5	4
119802-13130	6	1
119802-13640	6	3
119802-13740	6	6
119802-14580	7	3
119802-21660	9	9
119802-22500	9	18
119802-25071	7	13
119802-25101	7	10
119802-25901	7	16
119802-34821	10	35
119802-34850	10	37
119802-35100	10	8
119802-35110	10	9
119802-39450	10	11
119802-42001	11	1
119802-49610	11	32
119802-49620	11	37
119802-49711	11	33
119802-49721	11	38
119802-49730	11	34
119802-51090	12	8
119802-51250	12	130
119802-51560	12	54
119802-51590	12	60
119802-51600	12	61
119802-51680	12	65
119802-51690	12	66
119802-59320	11	36
119802-59550	14	56
119802-59560	14	58
119802-59960	14	50
119802-59970	14	51
119802-59980	14	52

Parts No.	Fig. No.	Ref. No.
119802-77200	16	35
119803-11340	4	28
	17	4
119803-11700	4	16
119803-21000	9	1
119803-21200	9	5
119803-22080	9	16
119803-25050	7	9
119803-53400	14	14
119803-77821	4	56
119803-77830	4	57
119807-61420	13	22
119810-01200	1	24
119810-01730	3	6
119810-02871	1	26
119810-02931	1	18
119810-02941	1	29
119810-11120	4	25
119810-12112	5	3
	17	23
119810-13110	6	2
	17	9
119810-14400	7	2
119810-23200	9	28
119810-23601	9	29
119810-23611	9	32
119810-23910	9	31
119810-35300	10	33
119810-42051	11	3
119810-42120	11	4
119810-42281	11	8
119810-42290	11	9
119812-01330	1	25
	17	2
119813-22300	9	22
119823-01770	3	8
119865-21600	9	15
119934-01800	2	3
119934-59910	12	127
120270-54410	4	36
121023-01551	2	24
121111-21501	9	12
121250-44901	11	24
121256-44600	11	42
121450-42450	11	22
121850-21680	9	11
121850-51960	2	11
	17	3
123501-79240	16	5
124060-01050	1	6

Parts No.	Fig. No.	Ref. No.
124060-11800	4	31
124060-77680	14	55
124101-49531	11	20
124160-01751	2	7
	4	1
124160-01910	1	4
		14
124160-11340	4	27
	17	11
124160-11360	4	53
124160-39140	10	12
124195-77770	15	24
124240-01871	2	8
		21
124240-01883	2	22
	8	1
	17	8
124450-44510	11	43
124450-44530	11	45
124450-44550	11	48
124450-44560	11	46
124465-44950	11	23
		30
	17	28
124722-59050	11	35
		39
	14	57
		60
128300-77920	16	33
128401-77440	16	12
129001-01250	1	7
129001-32001	10	16
129004-13200	10	41
129004-55612	10	43
129004-55801	10	53
129005-59830	10	2
129008-01520	2	4
129008-51390	12	36
129008-53000	14	2
129008-77800	4	55
129052-77380	16	4
129052-77422	16	7
129052-79260	16	18
129052-79270	16	19
129054-42320	11	11
129064-77330	16	28
129067-77340	16	29
129100-01580	3	1
		14
	9	2

Parts No. Index

Parts No.	Fig. No.	Ref. No.
129100-01640	3	15
129100-35140	10	10
129150-01580	2	6
129150-01650	3	16
129150-01881	7	17
	17	10
129150-02450	7	4
129150-03070	4	43
129150-11230	4	12
129150-11280	4	10
129150-11750	4	14
129150-14101	7	6
129150-14200	7	1
129150-25301	7	15
129150-26000	7	18
129150-26050	7	19
129150-32020	10	29
	17	27
129150-35042	10	32
	17	12
129150-35111	10	14
	17	24
129150-35153	10	15
129150-49811	11	27
	17	15
129150-59120	14	45
129150-59131	14	44
		48
129155-42350	11	19
129155-51280	13	5
129155-61460	13	24
129211-77920	16	34
129242-55700	10	44
129242-55720	10	45
129242-55730	10	46
129242-55740	10	47
129242-55750	10	48
129242-55760	10	49
129242-55770	10	50
129242-77010	15	2
129242-77100	15	4
129242-77110	15	5
129242-77120	15	6
129242-77130	15	7
129242-77140	15	8
129242-77150	15	9
129242-77160	15	10
129242-77170	15	11
129242-77180	15	13
129242-77210	15	16

Parts No.	Fig. No.	Ref. No.
129242-77260	15	20
129242-77270	15	22
129242-77280	15	23
129255-61410	13	21
129400-92420	17	29
129410-03990	5	2
129423-77710	16	17
129457-49801	11	26
129486-01670	3	18
129486-42050	11	31
	17	13
129486-59551	14	59
129489-21590	9	13
129612-01600	3	2
129642-61060	13	96
129698-77020	15	3
129698-77190	15	14
129698-77200	15	15
129698-77220	15	17
129698-77230	15	18
129698-77250	15	19
129792-22400	9	23
129795-01780	3	17
129795-01900	16	1
129795-01950	2	9
129795-02412	1	13
129795-21661	9	10
129795-49551	11	21
	17	14
129900-07900	4	2
129972-77341	16	30
129C26-01890	8	1 -1
158552-51151	12	11
158552-51571	12	55
		56
158552-51580	12	59
158552-51600	12	69
158552-51670	12	123
158552-51781	12	95
158552-52100	12	125
158552-52311	12	104
158552-52400	12	105
158552-52500	12	126
158552-61441	13	23
158552-61900	13	81
158553-51551	12	121
158553-51630	12	70
158553-51650	12	72
158553-51660	12	73
158553-51670	12	64

Parts No.	Fig. No.	Ref. No.
158553-51680	12	74
158553-51770	12	101
158553-51930	12	100
	13	64
158553-61050	13	2
158553-61070	13	3
158557-51570	12	57
158563-51281	12	34
		35
158563-51330	12	45
158600-51270	12	33
158601-51550	12	53
158601-51570	12	58
158601-51650	12	122
158601-51770	12	94
158601-51790	12	96
171051-01921	1	5
171056-49120	10	36
22190-080002	2	12
		13
	10	4
		5
	17	17
22190-100002	10	6
	17	22
22190-120002	12	98
		106
		128
	13	62
22190-180002	12	99
		107
22190-220002	3	11
	17	25
22217-140000	12	108
22312-050140	12	109
22351-030010	9	8
22351-050010	12	110
22351-060012	4	37
22512-070140	7	7
	9	6
22857-500100	4	51
		52
23010-038000	10	54
23061-070230	11	47
23414-080000	11	28
	17	16
23857-030000	10	3
23876-030000	11	13
24105-060064	7	21
24311-000070	12	112

Parts No.	Fig. No.	Ref. No.
24311-000120	4	54
	17	19
24311-000160	10	51
24311-000320	2	14
	4	58
	17	20
24316-240100	10	38
	17	18
24321-000750	10	52
24341-000240	2	25
	17	21
24356-010180	12	113
24356-010200	12	67
		114
24372-000150	12	68
25132-003700	11	18
26106-060102	12	115
	13	66
26106-060142	11	14
	13	82
		83
26106-060162	2	26
	11	40
26106-060202	11	15
	13	84
26106-080122	11	29
26106-080142	7	8
26106-080162	2	15
		16
		23
	3	12
	4	3
	10	39
	12	131
26106-080202	10	13
	12	132
26106-080252	4	38
	5	5
	11	25
26106-080302	2	17
26106-080352	3	19
	10	34
	11	16
26106-080402	7	14
26106-080452	3	13
	4	39
26106-080502	4	40
	16	31
26106-080552	2	18
	11	17

Parts No. Index

Parts No.	Fig. No.	Ref. No.
26106-080652	11	41
26106-080852	2	19
26106-080902	8	3
26106-080952	8	3 -1
26116-120252	15	1
26206-100252	3	4
26206-100302	3	5
26216-080402	8	4
26306-080002	2	20
	6	5
	8	5
26306-100002	16	27
26366-060002	10	7
26450-060252	10	30
26450-080452	12	117
26756-060002	13	67
26776-140002	12	118
27241-120000	1	8
27241-300000	1	9
27241-400000	4	22
27310-070001	4	29
719802-01560	1	1
719802-22950	9	36
719803-22900	9	34
719810-02981	1	21
719810-23100	9	24
719936-51391	12	1
729008-01500	2	1
729008-53100	14	1
977770-1207F	17	30
X2114535200	15	21
X9490561001	16	3
XXXXXX-XXXXX	17	1

Parts No.	Fig. No.	Ref. No.

Parts No.	Fig. No.	Ref. No.

Parts No.	Fig. No.	Ref. No.